MIAMI-DADE COUNTY
DEPARTMENT OF REGULATORY AND ECONOMIC RESOURCES (RER)
BOARD AND CODE ADMINISTRATION DIVISION

MIAMI-DADE COUNTY
PRODUCT CONTROL SECTION
11805 SW 26 Street, Room 208
T (786) 315-2590 F (786) 315-2599
www.miamidade.gov/economy

NOTICE OF ACCEPTANCE (NOA)

PGT Industries, Inc.
1070 Technology Drive
North Venice, FL 34275

SCOPE:

This NOA is being issued under the applicable rules and regulations governing the use of construction materials. The documentation submitted has been reviewed and accepted by Miami-Dade County RER - Product Control Section to be used in Miami Dade County and other areas where allowed by the Authority Having Jurisdiction (AHJ).

This NOA shall not be valid after the expiration date stated below. The Miami-Dade County Product Control Section (In Miami-Dade County) and/or the AHJ (in areas other than Miami-Dade County) reserve the right to have this product or material tested for quality assurance purposes. If this product or material fails to perform in the accepted manner, the manufacturer will incur the expense of such testing and the AHJ may immediately revoke, modify, or suspend the use of such product or material within their jurisdiction. RER reserves the right to revoke this acceptance, if it is determined by Miami–Dade County Product Control Section that this product or material fails to meet the requirements of the applicable building code.

This product is approved as described herein, and has been designed to comply with the Florida Building Code, including the High Velocity Hurricane Zone.-

DESCRIPTION: Series "SH-3000" Aluminum Single Hung Window – L.M.I.

APPROVAL DOCUMENT: Drawing No. **3000B-7-07**, titled "Alum. Single Hung Window, Imp. (LM & SM)", sheets 1 through 11 of 11, dated 07/12/07, with revision **C** dated 06/02/15, prepared by manufacturer, signed and sealed by Anthony Lynn Miller, P.E., bearing the Miami-Dade County Product Control Revision stamp with the Notice of Acceptance number and expiration date by the Miami-Dade County Product Control Section.

MISSILE IMPACT RATING: Large and Small Missile Impact Resistant

LABELING: Each unit shall bear a permanent label with the manufacturer's name or logo, city, state, model/series, and following statement: "Miami-Dade County Product Control Approved", unless otherwise noted herein.

RENEWAL of this NOA shall be considered after a renewal application has been filed and there has been no change in the applicable building code negatively affecting the performance of this product.

TERMINATION of this NOA will occur after the expiration date or if there has been a revision or change in the materials, use, and/or manufacture of the product or process. Misuse of this NOA as an endorsement of any product, for sales, advertising or any other purposes shall automatically terminate this NOA. Failure to comply with any section of this NOA shall be cause for termination and removal of NOA.

ADVERTISEMENT: The NOA number preceded by the words Miami-Dade County, Florida, and followed by the expiration date may be displayed in advertising literature. If any portion of the NOA is displayed, then it shall be done in its entirety.

INSPECTION: A copy of this entire NOA shall be provided to the user by the manufacturer or its distributors and shall be available for inspection at the job site at the request of the Building Official.

This NOA **revises NOA# 12-0726.02** and consists of this page 1 and evidence pages E-1 and E-2, as well as approval document mentioned above.

The submitted documentation was reviewed by **Manuel Perez, P.E.**

MIAMI-DADE COUNTY APPROVED

8/20/15

PGT Industries, Inc.

NOTICE OF ACCEPTANCE: EVIDENCE SUBMITTED

A. DRAWINGS

1. Manufacturer's die drawings and sections.
   (Submitted under previous NOA No. 07-0905.02)
2. Drawing No. **3000B-7-07**, titled "Alum. Single Hung Window, Imp. (LM & SM)", sheets 1 through 11 of 11, dated 07/12/07, with revision **C** dated 06/02/15, prepared by manufacturer, signed and sealed by Anthony Lynn Miller, P.E.

B. TESTS

1. Test reports on: 1) Air Infiltration Test, per FBC, TAS 202-94
   2) Uniform Static Air Pressure Test, Loading per FBC, TAS 202-94
   3) Water Resistance Test, per FBC, TAS 202-94
   4) Large Missile Impact Test per FBC, TAS 201-94
   5) Cyclic Wind Pressure Loading per FBC, TAS 203-94
   6) Forced Entry Test, per FBC 2411.3.2.1, and TAS 202-94

   along with marked-up drawings and installation diagram of a series SH-3000 aluminum single hung window, prepared by Architectural Testing, Inc., Test Report No. **ATI-72132.01-401-18**, dated 08/21/07, signed and sealed by Joseph A. Reed, P.E.
   (Submitted under NOA No. 07-0905.02)

C. CALCULATIONS

1. Anchor verification calculations and structural analysis, complying with **FBC-5th Edition (2014)**, dated 06/08/15, prepared by manufacturer, signed and sealed by Anthony Lynn Miller, P.E.
2. Glazing complies with **ASTM E1300-04**

D. QUALITY ASSURANCE

1. Miami-Dade Department of Regulatory and Economic Resources (RER).

E. MATERIAL CERTIFICATIONS

1. Notice of Acceptance No. **14-0916.11** issued to **Kuraray America, Inc.** for their **"SentryGlas® (Clear and White) Glass Interlayers"** dated 06/25/15, expiring on 07/04/18.

Manuel Perez

Manuel Perez, P.E.
Product Control Examiner
NOA No. 15-0612.11
Expiration Date: December 06, 2017
Approval Date: August 27, 2015

NOTICE OF ACCEPTANCE: EVIDENCE SUBMITTED

F. STATEMENTS

1. Statement letter of conformance, complying with **FBC-5th Edition (2014)**, dated June 2, 2015, issued by manufacturer, signed and sealed by Anthony Lynn Miller, P.E.
2. Statement letter of no financial interest, dated June 2, 2015, issued by manufacturer, signed and sealed by Anthony Lynn Miller, P.E.
3. Laboratory compliance letter for Test Report No. **ATI-72132.01-401-18** issued by Architectural Testing, Inc., dated 08/21/07, signed and sealed by Joseph A. Reed, P.E. ***(Submitted under NOA No. 07-0905.02)***

G. OTHERS

1. Notice of Acceptance No. **12-0726.02**, issued to PGT Industries for their Series "SH-3000" Aluminum Single Hung Window - L.M.I." approved on 10/18/12 and expiring on 12/06/17.

Manuel Perez, P.E.
Product Control Examiner
NOA No. 15-0612.11
Expiration Date: December 06, 2017
Approval Date: August 27, 2015

GENERAL NOTES: LARGE AND SMALL MISSILE IMPACT SINGLE HUNG WINDOW

1. GLAZING OPTIONS:
7/16" LAMINATED GLASS CONSISTING OF (2) LITES OF 3/16" HEAT STRENGTHENED GLASS WITH AN .090 KURARAY AMERICA, INC. SENTRYGLAS®(SG) INTERLAYER.
2. CONFIGURATIONS: "OX" (1/1, ORIEL), TOP SASH REMOVABLE.
3. DESIGN PRESSURES: (SEE TABLE 1)
A. NEGATIVE DESIGN LOADS BASED ON TESTED PRESSURE AND GLASS TABLES ASTM E 1300.
B. POSITIVE DESIGN LOADS BASED ON WATER AND STRUCTURAL TEST PRESSURE AND GLASS TABLES ASTM E 1300.
4. ANCHORAGE: THE 33 1/3% STRESS INCREASE HAS NOT BEEN USED IN THE DESIGN OF THIS PRODUCT. SEE SHEETS 6 THROUGH 10 FOR ANCHORAGE DETAILS.
5. SHUTTER REQUIREMENT: NONE REQUIRED.
6. FRAME AND PANEL CORNERS SEALED WITH NARROW JOINT SEALANT OR GASKET.
7. REFERENCES: TEST REPORTS (ATI) 72132-.01-401-18
ELCO TEXTRON NOA
ANSI/AF&PA NDS FOR WOOD CONSTRUCTION
ADM, ALUMINUM DESIGN MANUAL
8. THIS PRODUCT HAS BEEN DESIGNED & TESTED TO COMPLY WITH THE REQUIREMENTS OF THE FLORIDA BUILDING CODE, INCLUDING THE HIGH VELOCITY HURRICANE ZONE (HVHZ).
9. FOR CONCRETE OR CONCRETE BLOCK APPLICATIONS IN MIAMI-DADE COUNTY, USE ONLY MIAMI-DADE COUNTY APPROVED ANCHORS. MINIMUM DISTANCE FROM ANCHOR TO CONCRETE EDGE IS 2". ANCHORS SHOULD NOT BE INSTALLED WITHIN 5" OF EACH OTHER.
FOR WOOD APPLICATIONS IN MIAMI-DADE COUNTY, USE #14 WOOD SCREWS. SCREW THREADS MUST BE COMPLETELY EMBEDDED INTO SUBSTRATE.

DESIGN PRESSURE Table 1.

GLASS TYPE	POS	NEG
7/16" HEAT STRENGTHENED LAMI	+110.0	-120.0

DESIGN PRESSURE MAY BE LIMITED BASED ON ANCHOR TYPE USED. SEE ANCHORAGE TABLES 2, 3 AND 4 ON SHEETS 8, 9 AND 10.

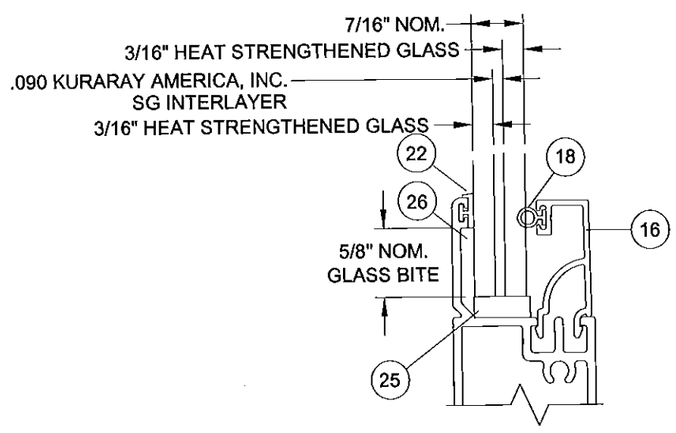

7/16" LAMI GLAZING DETAIL
(TYPICAL ACTIVE & FIXED SASH)

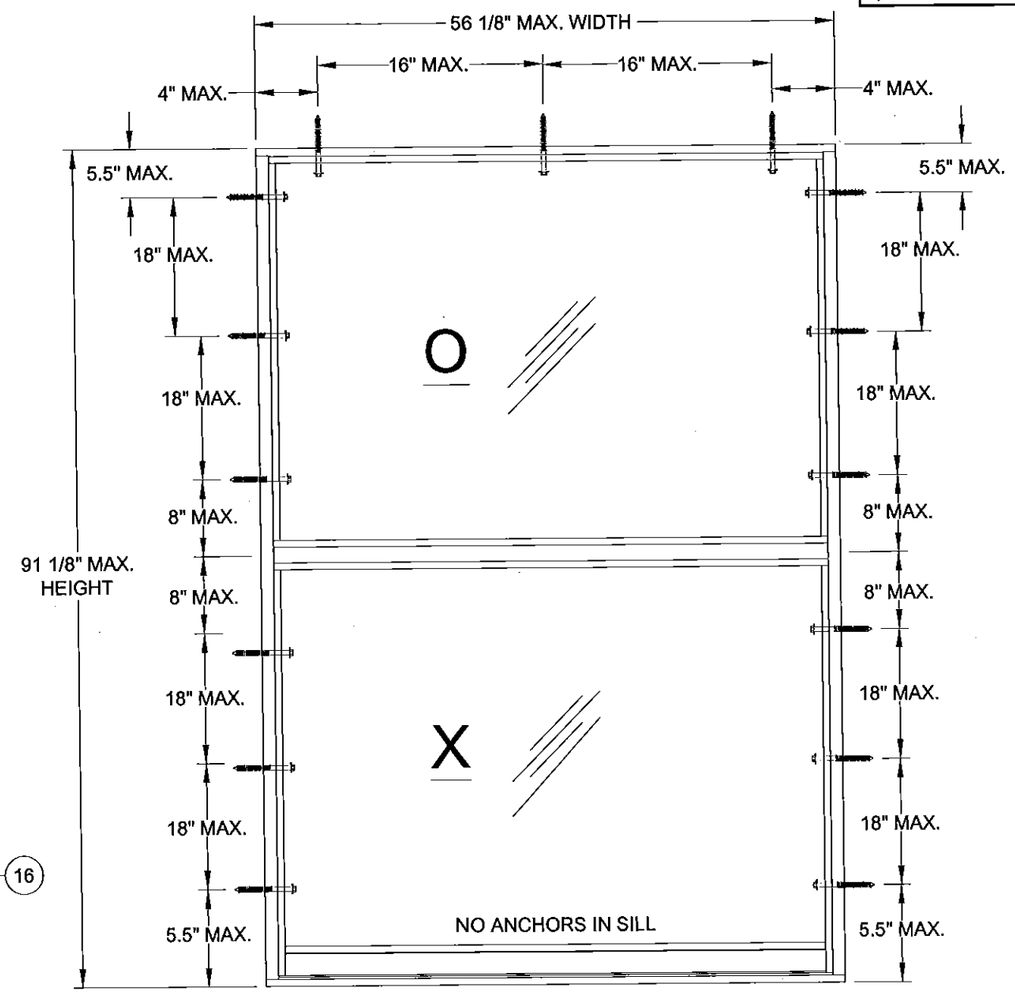

ABOVE ANCHORAGE DETAILLS REFER TO MAXIMUM SPACING. FOR EXACT ANCHORAGE REQUIREMENTS, PLEASE SEE THE ENCLOSED SHEETS

DETAIL A

NOA DRAWING MAP

	SHEET
GENERAL NOTES	1
GLAZING DETAILS	1
DESIGN PRESSURES	1
ELEVATIONS	2-3
VERT. SECTIONS	3
HORIZ. SECTIONS	3
PARTS LIST	4
CORNER DETAIL	4
EXTRUSIONS	5
ANCHORAGE	6-7
ANCHOR QUANTITIES	8-10
EGRESS CHART	11

PRODUCT REVISED
as complying with the Florida Building Code
Acceptance No 15-0612.11
Expiration Date Dec. 6, 2017
By Manuel Perez
Miami Dade Product Control

ANTHONY LYNN MILLER
LICENSE
No. 58705
STATE OF FLORIDA
PROFESSIONAL ENGINEER
8/19/15
A. LYNN MILLER, P.E.
FL P.E.# 58705

Revsd By:	Date:	Revisions:	
Revsd By:	Date:	Revisions:	
Revsd By: J.R.	Date: 06/02/15	Revisions: C	FBC 2014 CODE CHANGE, THIS SHEET: REMOVED STD YEARS
Drawn By: J.R.	Date: 07/12/07	Checked By: J.R.	Date: 7/13/07

1070 TECHNOLOGY DRIVE
N. VENICE, FL 34275
P.O. BOX 1529
NOKOMIS, FL 34274

PGT Visibly Better

Description: GENERAL NOTES, GLAZING DETAIL & DP
Title: ALUM. SINGLE HUNG WINDOW, IMP. (LM&SM)

Series/Model:	Scale:	Sheet:	Drawing No.	Rev:
SH3000	NTS	1 of 11	3000B-7-07	C

Daylight Opening Width = Window Width - 6.5
Daylight Opening Height = $\frac{\text{Window Height}}{2}$ - 5

Above formulas are for both top and bottom sashes, and only for even split windows.

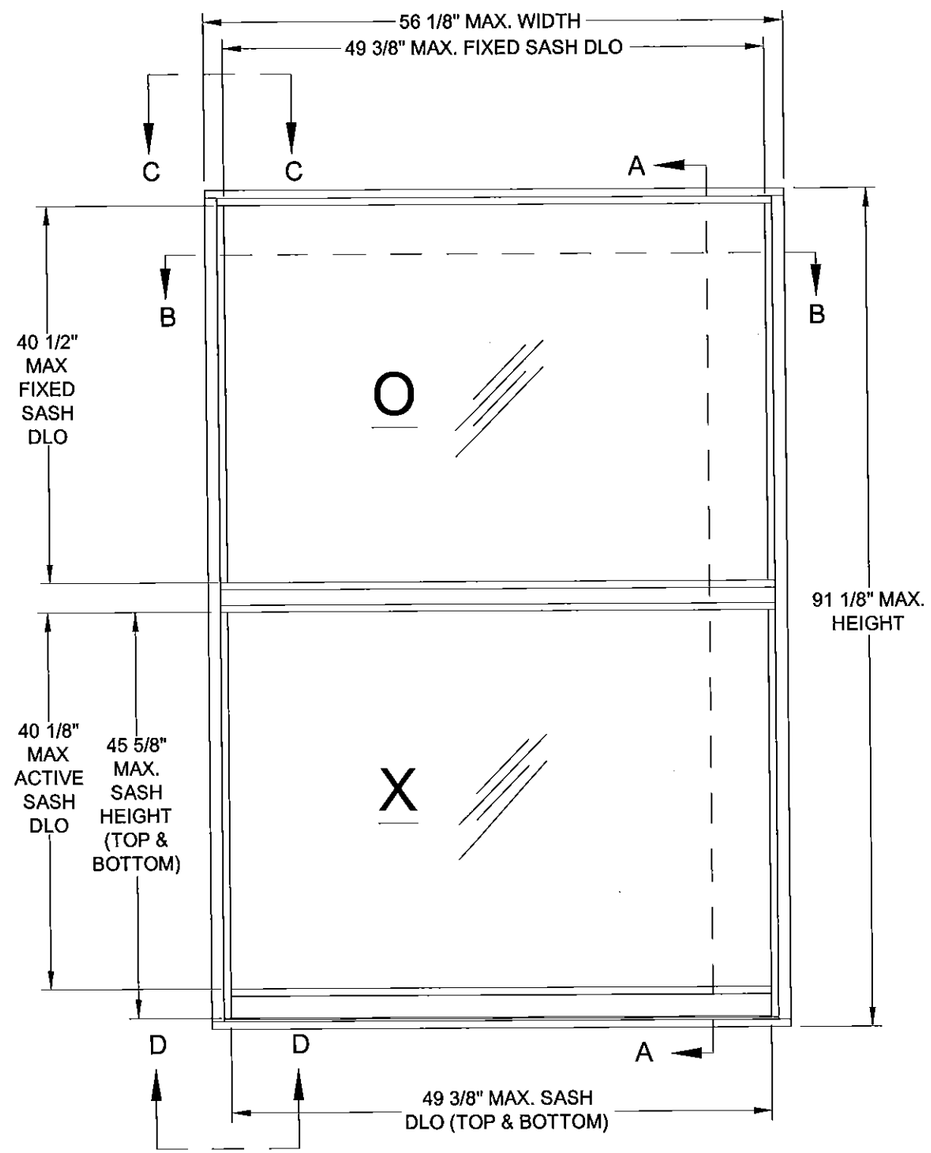

DETAIL A

PRODUCT REVISED
as complying with the Florida
Building Code
Acceptance No 15-0612.11
Expiration Date Dec. 6, 2017
By Manuel Perez
Miami Dade Product Control

ANTHONY LYNN MILLER
LICENSE
No. 58705
8/19/15
STATE OF FLORIDA
PROFESSIONAL ENGINEER
A. LYNN MILLER, P.E.
FL P.E.# 58705

NOTES:

1. SEE SHEET 3 FOR VERTICAL AND HORIZONTAL SECTION DETAILS.
2. SEE SHEET 4 FOR CORNER DETAIL VIEWS AND BILL OF MATERIAL.
3. SEE SHEETS 6 THROUGH 10 FOR ANCHORAGE INFORMATION.

Revsd By:	Date:	Revisions:	
Revsd By:	Date:	Revisions:	
Revsd By: J.R.	Date: 06/02/15	Revisions: C	NO CHANGES THIS SHEET
Drawn By: J.R.	Date: 07/12/07	Checked By: J.R.	Date: 7/13/07

1070 TECHNOLOGY DRIVE
N. VENICE, FL 34275

P.O. BOX 1529
NOKOMIS, FL 34274

PGT
Visibly Better

Description: ELEVATIONS

Title: ALUM. SINGLE HUNG WINDOW, IMP. (LM&SM)

Series/Model:	Scale:	Sheet:	Drawing No.	Rev:
SH3000	NTS	2 of 11	3000B-7-07	C

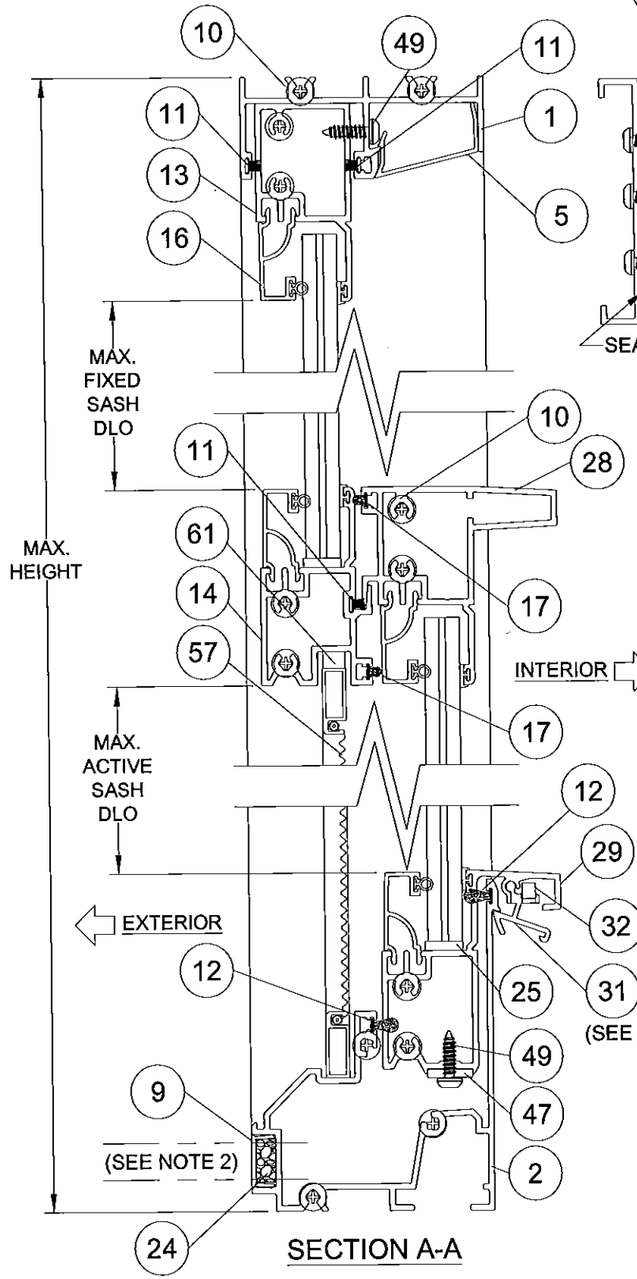

SECTION A-A

TYPICAL LOWER CORNER DETAIL

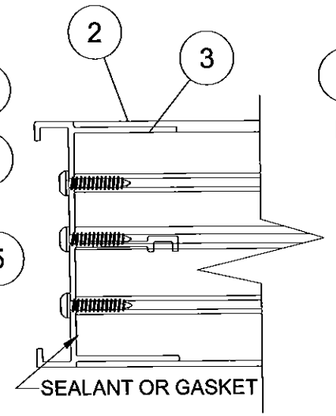

VIEW D-D

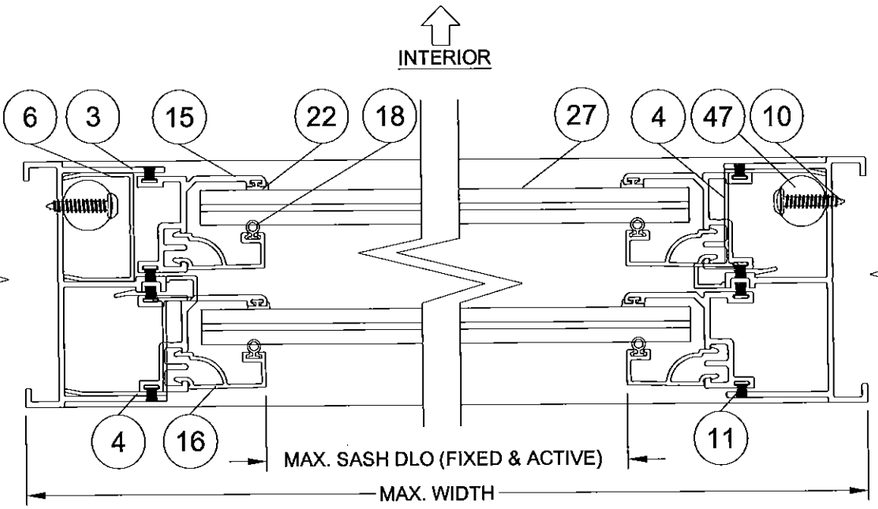

SECTION B-B

TYPICAL UPPER CORNER DETAIL

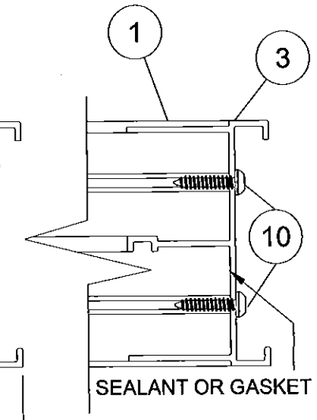

VIEW C-C

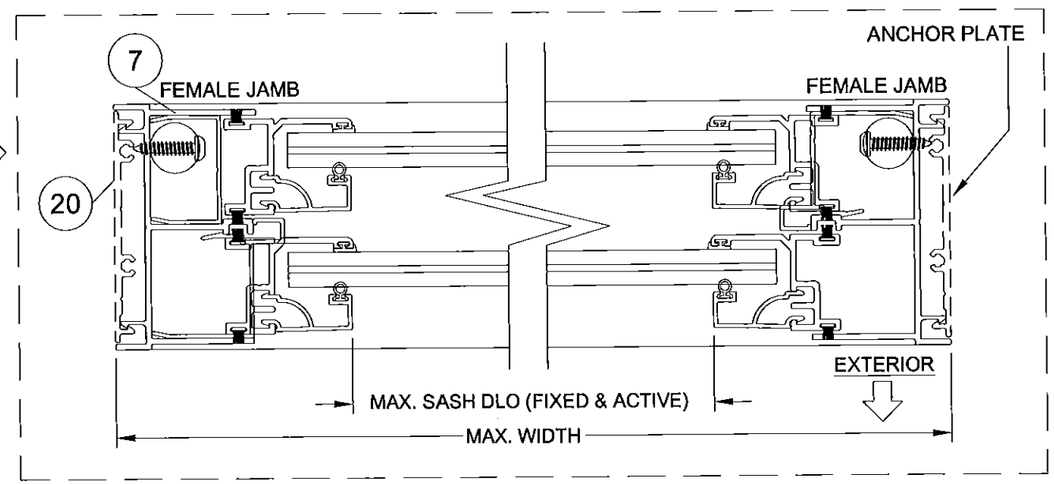

ALT. SECTION B-B
OPTIONAL ANCHOR PLATE & FEMALE JAMB

NOTES:

1. TWO BOTTOM LOCKS LOCATED 4" FROM EACH SIDE OF VENT.
2. THREE 1" X 5/8" WEEPHOLES REQUIRED, TWO AT 6.25" FROM END OF SILL, AND ONE AT MIDSPAN. TWO END WEEPHOLES MAY BE USED IF THE WINDOW IS 34" OR LESS IN WIDTH.
3. THE OPTIONAL ANCHOR PLATE IS TO BE USED WHEN SPECIFIED BY THE ANCHOR QUANTITY CHARTS OF PAGES 8-10.

PRODUCT REVISED
as complying with the Florida Building Code
Acceptance No 15-0612.11
Expiration Date Dec. 6, 2017
By Manuel Perez
Miami Dade Product Control

ANTHONY LYNN MILLER
LICENSE
No. 58705
8/19/15
STATE OF FLORIDA
PROFESSIONAL ENGINEER
A. LYNN MILLER, P.E.
FL P.E.# 58705

Revsd By:	Date:	Revisions:	
Revsd By:	Date:	Revisions:	
Revsd By: J.R.	Date: 06/02/15	Revisions: C	NO CHANGES THIS SHEET
Drawn By: J.R.	Date: 07/12/07	Checked By: J.R.	Date: 7/13/07

1070 TECHNOLOGY DRIVE
N. VENICE, FL 34275

P.O. BOX 1529
NOKOMIS, FL 34274

PGT
Visibly Better

Description: SECTIONS

Title: ALUM. SINGLE HUNG WINDOW, IMP. (LM&SM)

Series/Model:	Scale:	Sheet:	Drawing No.	Rev:
SH3000	1/2	3 of 11	3000B-7-07	C

TABLE 2.

#	Dwg #	Description
1	13002A	Frame Head (Equal Leg)
2	13040	Frame Sill (Equal Leg)
3	13004	Frame Jamb (Equal Leg)
4	13017	Jamb Trim Cover/Sash Stop
5	13044	Head Screw Cover
6	4053	Balance Cover
7	13116	Female Jamb
9	13139	Track Cover
10	13011	Frame/Sash Screws #10 x 1.25" PH
11	1059	Wstp .187 X .210 FS
12	1010A	Sill Wstp, 3/8" x .190 Foam Bulb
13	13005	Top Sash Top Rail
14	13043	Top Sash Bottom Rail
15	13007	Sash Side Rail
16	13012	Beading 7/16
17	1213	MR Wstp, .200" x .190 Foam Bulb
18	1224	Bead Wstp.
20	13103	Anchor Plate
21	13099	Interlock Clip
22	13020	Glazing Leg Wstp
24	1626	Baffle (Open Cell Foam 30 PPI)
25	1614	Setting Blocks .125 X .5 X 1.00
26	-	GE 7700 or Equiv.
27	-	Glass
28	13042	Bottom Sash Top Rail
29	13041	Bottom Sash Bottom Rail
31	13057	Bottom Lock
32	1088	Bottom Lock Spring
33	-	Sash Top Guide Post
34	-	#8 x 3/4 Ph PH SS
35	13077	Sash Top Guide (Left)
36	13076	Sash Top Guide (Right)
37	13144	Mounting Clip
40	13078	Sash Bottom Guide (Right)
41	13079	Sash Bottom Guide (Left)
42	4029	Balance Clip
43	13059	Top Lift Rail Cap (L & R)
44	13097	Bottom Lift Rail Cap (Right)
45	13098	Bottom Lift Rail Cap (Left)
46	13026	Cap Screws 10-32 x 1/2 Hex
47	4029-1	Caldwell Ultra-Lift Balance
49	-	#10 x 3/4 Ph PH SD SS
55	1279B	Extruded Screen Frame
57	61816	Screen Cloth
58	1239A	Top Corner Keys
59	1632	Bottom Corner Keys
60	1635	Screen Spline
61	1073	Screen Spring

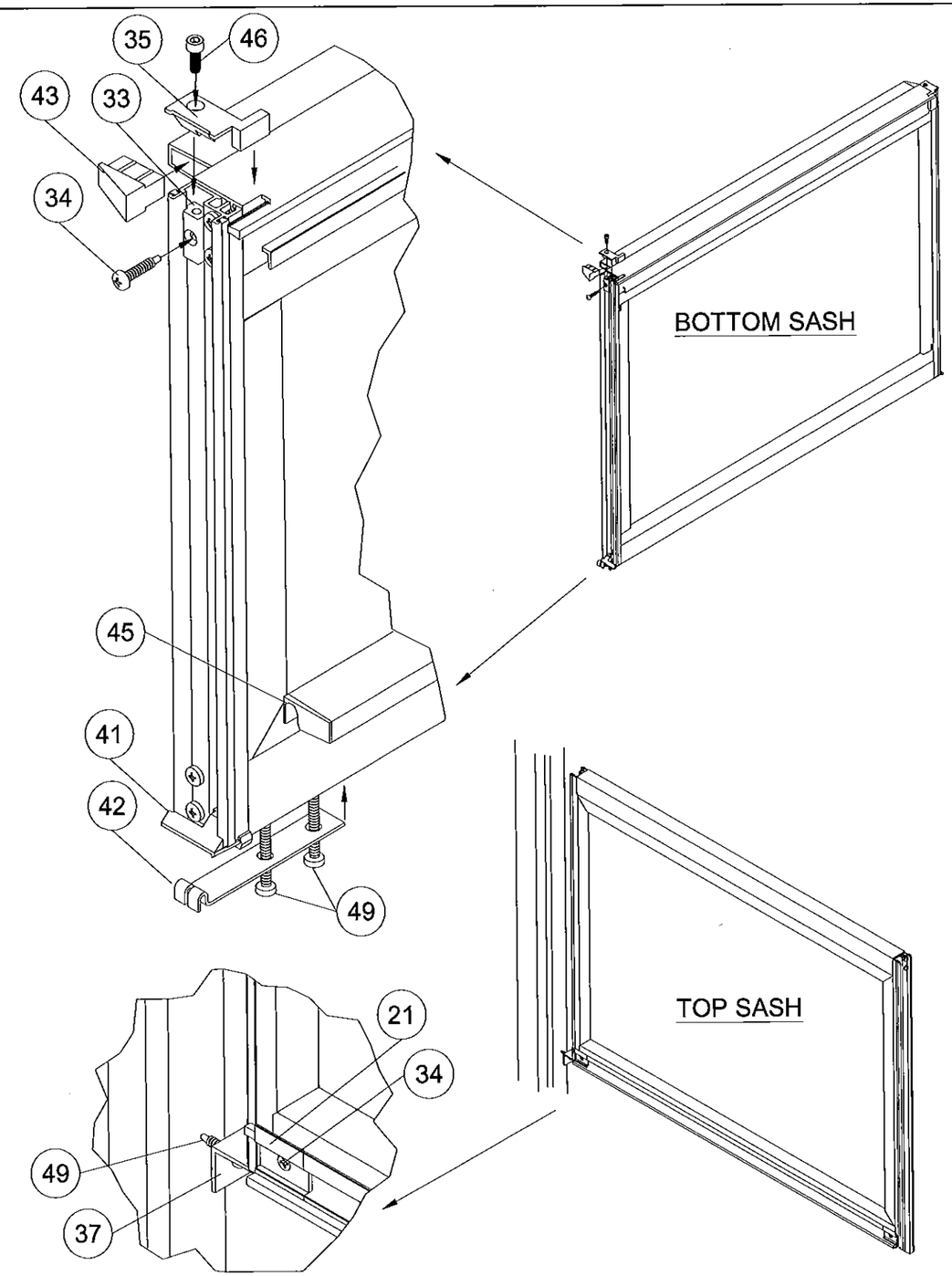

PRODUCT REVISED
as complying with the Florida
Building Code
Acceptance No. 15-0612.11
Expiration Date Dec. 6, 2017
By Manuel Perez
Miami-Dade Product Control

ANTHONY LYNN MILLER
LICENSE
No. 58705
8/19/15
STATE OF
FLORIDA
PROFESSIONAL ENGINEER

A. LYNN MILLER, P.E.
FL P.E.# 58705

Revsd By:	Date:	Revisions:	
Revsd By:	Date:	Revisions:	
Revsd By: J.R.	Date: 06/02/15	Revisions: C	NO CHANGES THIS SHEET
Drawn By: J.R.	Date: 07/12/07	Checked By: J.R.	Date: 7/13/07

1070 TECHNOLOGY DRIVE
N. VENICE, FL 34275

P.O. BOX 1529
NOKOMIS, FL 34274

PGT
Visibly Better

Description: PARTS LIST & FRAME CORNER DETAIL

Title: ALUM. SINGLE HUNG WINDOW, IMP. (LM&SM)

Series/Model:	Scale:	Sheet:	Drawing No.	Rev:
SH3000	NTS	4 of 11	3000B-7-07	C

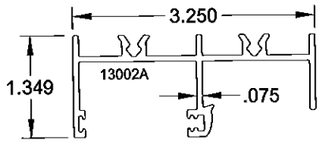

1 FRAME HEAD

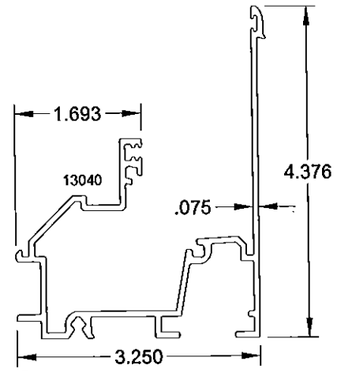

2 FRAME SILL

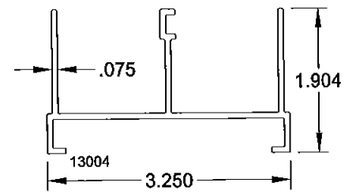

3 FRAME JAMB

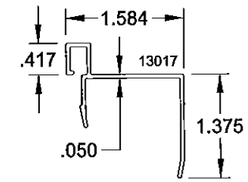

4 JAMB TRIM COVER/ SASH STOP

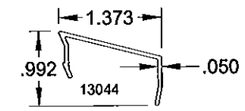

5 HEAD SCREW COVER

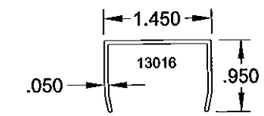

6 BALANCE COVER

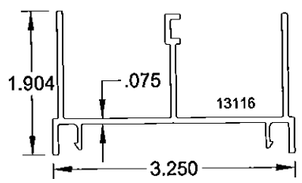

7 FEMALE JAMB

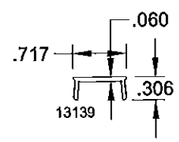

9 TRACK COVER

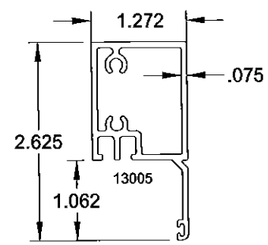

13 TOP SASH TOP RAIL

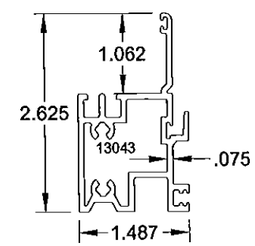

14 TOP SASH BOTTOM RAIL

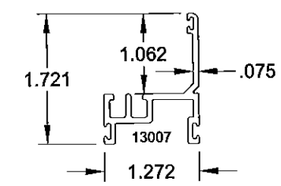

15 SASH SIDE RAIL

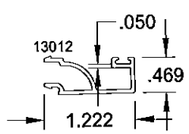

16 BEADING 7/16

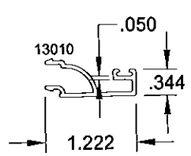

17 BEADING 9/16

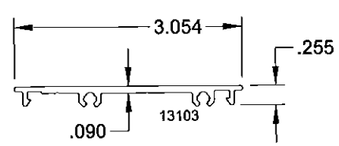

20 ANCHOR PLATE

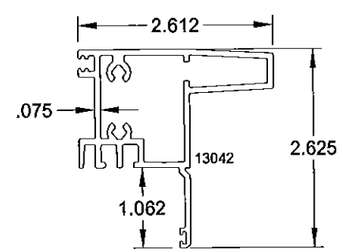

28 BOTTOM SASH BOTTOM RAIL

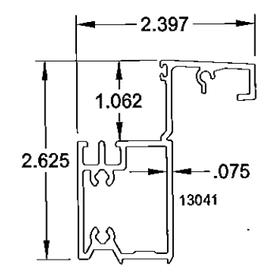

29 BOTTOM SASH BOTTOM RAIL

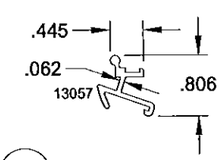

31 BOTTOM LOCK

PRODUCT REVISED
as complying with the Florida
Building Code
Acceptance No 15-0612.11
Expiration Date Dec. 6, 2017
By Manuel Perez
Miami-Dade Product Control

ANTHONY LYNN MILLER
LICENSE
No. 58705
8/19/15
STATE OF FLORIDA
PROFESSIONAL ENGINEER
A. LYNN MILLER, P.E.
FL P.E.# 58705

Revsd By:	Date:	Revisions:	
Revsd By:	Date:	Revisions:	
Revsd By: J.R.	Date: 06/02/15	Revisions: C	CORRECTED PART #1
Drawn By: J.R.	Date: 07/12/07	Checked By: J.R.	Date: 7/13/07

1070 TECHNOLOGY DRIVE
N. VENICE, FL 34275

P.O. BOX 1529
NOKOMIS, FL 34274

PGT
Visibly Better

Description: EXTRUSIONS

Title: ALUM. SINGLE HUNG WINDOW, IMP. (LM&SM)

Series/Model:	Scale:	Sheet:	Drawing No.	Rev:
SH3000	1/2	5 of 11	3000B-7-07	C

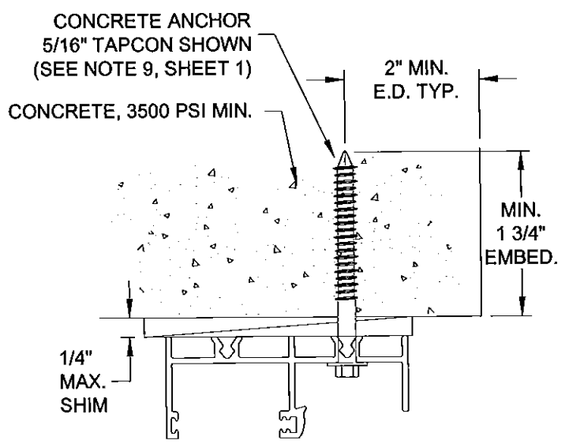

DETAIL A

CONCRETE OR CONCRETE BLOCK SUBSTRATE

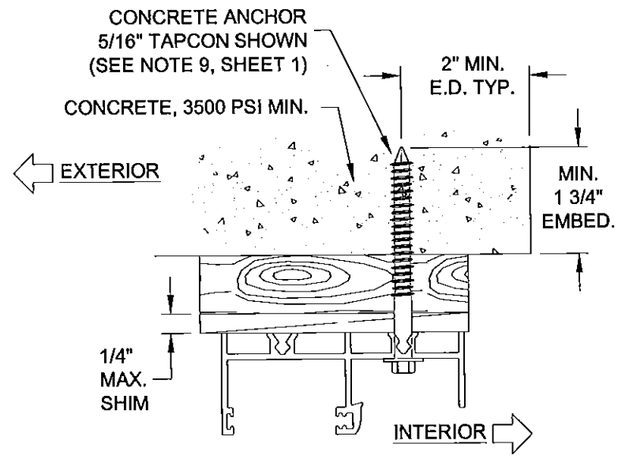

DETAIL B

CONCRETE OR CONCRETE BLOCK SUBSTRATE
WITH 1X WOOD BUCK, SEE NOTE 1

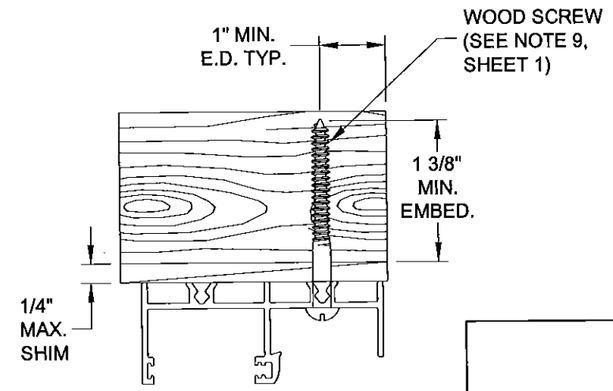

DETAIL C

2X WOOD BUCK OR DIRECTLY INTO
WOOD FRAMING, SEE NOTE 1

TYPICAL HEAD ANCHORAGE

PRODUCT REVISED
as complying with the Florida
Building Code
Acceptance No 15-0612.11
Expiration Date Dec. 6, 2017
By Manuel Perez
Miami-Dade Product Control

NOTES:

1. WOOD BUCKS DEPICTED IN THE SECTIONS ON THIS PAGE AS 1x ARE BUCKS WHOSE TOTAL THICKNESS IS LESS THAN 1 1/2". 1x WOOD BUCKS ARE OPTIONAL IF UNIT CAN BE INSTALLED DIRECTLY TO SOLID CONCRETE. WOOD BUCKS DEPICTED AS 2x ARE 1 1/2" THICK OR GREATER. INSTALLATION TO THE SUBSTRATE OF WOOD BUCKS TO BE ENGINEERED BY OTHERS OR AS APPROVED BY AUTHORITY HAVING JURISDICTION.

2. FOR ATTACHMENT TO ALUMINUM: THE MATERIAL SHALL BE A MINIMUM STRENGTH OF 6063-T5 AND A MINIMUM OF 1/8" THICK. THE ALUMINUM STRUCTURAL MEMBER SHALL BE OF A SIZE TO PROVIDE FULL SUPPORT TO THE WINDOW FRAME SIMILAR TO THAT SHOWN IN THESE DETAILS FOR 2x WOOD BUCKS. SHIMS MAY NOT BE USED. THE ANCHOR SHALL BE A #14 SHEET METAL SCREW WITH FULL ENGAGEMENT INTO THE ALUMINUM. IF THESE CRITERIA ARE MET, THE RESPECTIVE DESIGN PRESSURES, ANCHORAGE SPACING AND QUANTITIES FOR A #14 WOOD SCREW MAY BE USED.

3. ANCHORS ARE NOT REQUIRED AT THE SILL.

ANTHONY LYNN MILLER
LICENSE
No. 58705
STATE OF FLORIDA
PROFESSIONAL ENGINEER
8/19/15

A. LYNN MILLER, P.E.
FL P.E.# 58705

Revsd By:	Date:	Revisions:	
Revsd By:	Date:	Revisions:	
Revsd By: J.R.	Date: 06/02/15	Revisions: C	CHANGED EDGE DISTANCE IN MASONRY TO 2"
Drawn By: J.R.	Date: 07/12/07	Checked By: J.R.	Date: 7/13/07

1070 TECHNOLOGY DRIVE
N. VENICE, FL 34275

P.O. BOX 1529
NOKOMIS, FL 34274

PGT
Visibly Better

Description: ANCHORAGE DETAILS 1

Title: ALUM. SINGLE HUNG WINDOW, IMP. (LM&SM)

Series/Model:	Scale:	Sheet:	Drawing No.	Rev:
SH3000	NTS	6 of 11	3000B-7-07	C

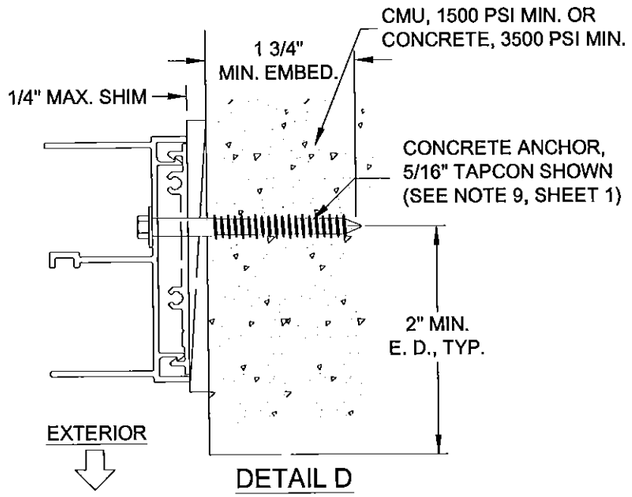

DETAIL D

CONCRETE OR CONCRETE BLOCK SUBSTRATE

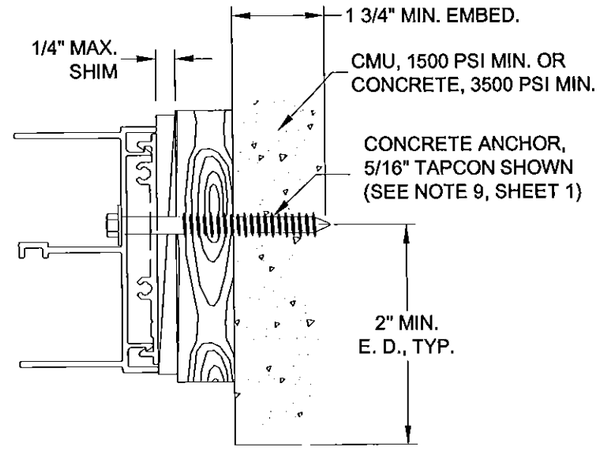

DETAIL E

CONCRETE OR CONCRETE BLOCK SUBSTRATE
WITH 1X WOOD BUCK, SEE NOTE 1, SHEET 6

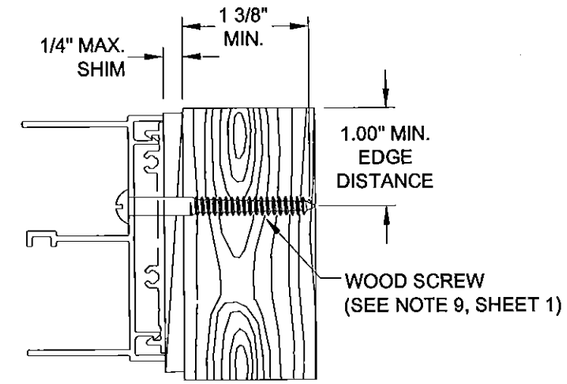

DETAIL F

2X WOOD BUCK OR DIRECTLY INTO
WOOD FRAMING, SEE NOTE 1, SHEET 6

TYPICAL JAMB ANCHORAGE WITH ANCHOR PLATE

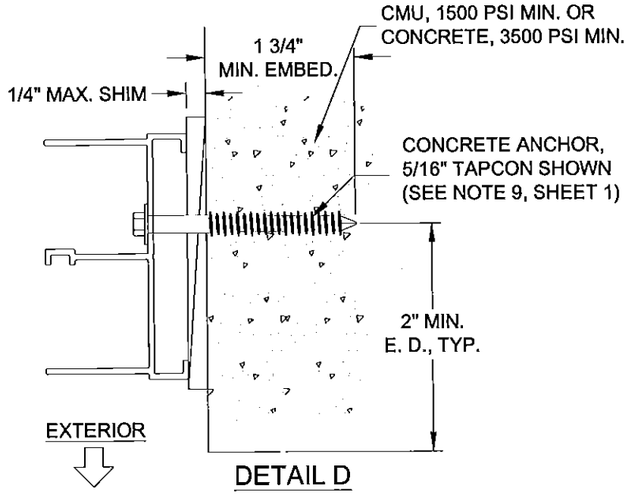

DETAIL D

CONCRETE OR CONCRETE BLOCK SUBSTRATE

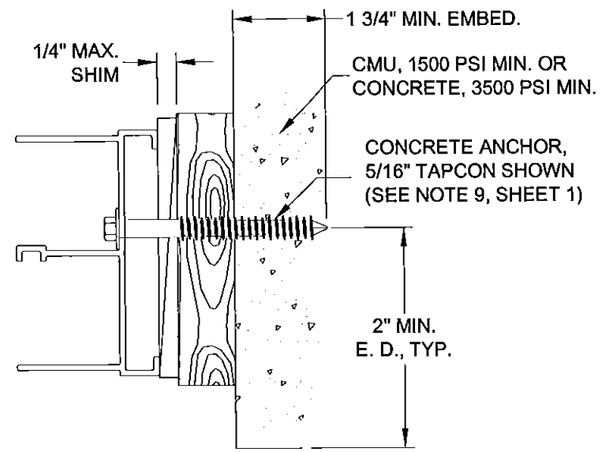

DETAIL E

CONCRETE OR CONCRETE BLOCK SUBSTRATE
WITH 1X WOOD BUCK, SEE NOTE 1, SHEET 6

TYPICAL JAMB ANCHORAGE WITHOUT ANCHOR PLATE

NOTE:

THE ANCHOR PLATE MUST BE USED WHEN INSTALLING INTO WOOD.

PRODUCT REVISED
as complying with the Florida
Building Code
Acceptance No 15-0612.11
Expiration Date Dec. 6, 2017
By Manuel Perez
Miami-Dade Product Control

ANTHONY LYNN MILLER
LICENSE
No. 58705
STATE OF FLORIDA
PROFESSIONAL ENGINEER

A. LYNN MILLER, P.E.
FL P.E.# 58705

Revsd By:	Date:	Revisions:	
Revsd By:	Date:	Revisions:	
Revsd By: J.R.	Date: 06/02/15	Revisions: C	CHANGED EDGE DISTANCE IN MASONRY TO 2"
Drawn By: J.R.	Date: 07/12/07	Checked By: J.R.	Date: 7/13/07

1070 TECHNOLOGY DRIVE
N. VENICE, FL 34275

P.O. BOX 1529
NOKOMIS, FL 34274

PGT
Visibly Better

Description: ANCHORAGE DETAILS 2

Title: ALUM. SINGLE HUNG WINDOW, IMP. (LM&SM)

Series/Model:	Scale:	Sheet:	Drawing No.	Rev:
SH3000	NTS	7 of 11	3000B-7-07	C

TABLE 3. HEAD & JAMB ANCHOR QUANTITY FOR DESIGN PRESSURES UP TO +110/-120 PSF

WINDOW WIDTH	WINDOW HEIGHT 36				48				60				72				84				91 1/8			
	1, Wood w/ Anchor Plate	2, Concrete w/o Anchor Plate	2a, Concrete w/ Anchor Plate	3, Concrete w/ Anchor Plate	1, Wood w/ Anchor Plate	2, Concrete w/o Anchor Plate	2a, Concrete w/ Anchor Plate	3, Concrete w/ Anchor Plate	1, Wood w/ Anchor Plate	2, Concrete w/o Anchor Plate	2a, Concrete w/ Anchor Plate	3, Concrete w/ Anchor Plate	1, Wood w/ Anchor Plate	2, Concrete w/o Anchor Plate	2a, Concrete w/ Anchor Plate	3, Concrete w/ Anchor Plate	1, Wood w/ Anchor Plate	2, Concrete w/o Anchor Plate	2a, Concrete w/ Anchor Plate	3, Concrete w/ Anchor Plate	1, Wood w/ Anchor Plate	2, Concrete w/o Anchor Plate	2a, Concrete w/ Anchor Plate	3, Concrete w/ Anchor Plate
24	2	2	2	2	2	2	2	2	2	2	2	2	2	2	2	2	2	2	2	2	2	2	2	2
	2 | 2	2 | 2	2 | 2	2 | 2	2 | 2	2 | 2	2 | 2	2 | 2	3 | 3	3 | 3	3 | 3	3 | 3	3 | 3	3 | 3	3 | 3	3 | 3	3 | 3	3 | 3	3 | 3	3 | 3	3 | 3	3 | 3	3 | 3	3 | 4	3 | 3	3 | 3
30	3	3	3	3	3	3	3	3	3	3	3	3	3	3	3	3	3	3	3	3	3	3	3	3
	2 | 2	2 | 2	2 | 2	2 | 2	2 | 2	2 | 2	2 | 2	2 | 2	3 | 3	3 | 3	3 | 3	3 | 3	3 | 3	3 | 4	3 | 3	3 | 3	3 | 3	4 | 4	3 | 3	3 | 3	3 | 3	3 | 3	4 | 5	3 | 3	3 | 3
36	3	3	3	3	3	3	3	3	3	3	3	3	3	3	3	3	3	3	3	3	3	3	3	3
	2 | 2	2 | 2	2 | 2	2 | 2	2 | 2	2 | 3	2 | 2	2 | 2	3 | 3	3 | 4	3 | 3	3 | 3	3 | 3	3 | 4	3 | 3	3 | 3	4 | 5	3 | 4	3 | 4	3 | 4	4 | 6	3 | 4	3 | 4
42	4	4	4	4	4	4	4	4	4	4	4	4	4	4	4	4	4	4	4	4	4	4	4	4
	2 | 2	2 | 3	2 | 2	2 | 2	2 | 2	2 | 3	2 | 2	2 | 2	3 | 3	3 | 4	3 | 3	3 | 3	3 | 3	4 | 5	3 | 4	3 | 4	3 | 4	4 | 6	3 | 4	3 | 4	3 | 4	5 | 6	3 | 4	3 | 4
48	4	4	4	4	4	4	4	4	4	4	4	5	4	4	4	5	4	4	4	6	4	4	4	6
	2 | 2	2 | 3	2 | 2	2 | 2	2 | 3	2 | 4	2 | 3	2 | 3	3 | 3	3 | 5	3 | 3	3 | 3	3 | 4	4 | 6	3 | 4	3 | 4	3 | 5	5 | 7	3 | 5	3 | 5	4 | 5	5 | 7	4 | 5	4 | 5
54	4	4	4	4	4	4	4	5	4	4	4	6	4	4	4	7	4	4	4	7	4	4	4	7
	2 | 2	2 | 3	2 | 2	2 | 2	2 | 3	3 | 4	2 | 3	2 | 3	3 | 4	4 | 6	3 | 4	3 | 4	3 | 4	4 | 7	3 | 5	3 | 5	4 | 5	5 | 8	4 | 5	4 | 5	4 | 6	6 | 8	4 | 6	4 | 6
56 1/8	4	4	4	4	4	4	4	5	4	4	4	6	4	4	4	7	4	4	4	7	4	4	4	8
	2 | 2	2 | 3	2 | 2	2 | 2	2 | 3	3 | 5	2 | 3	2 | 3	3 | 4	4 | 6	3 | 4	3 | 4	3 | 5	5 | 7	3 | 5	3 | 5	4 | 5	5 | 8	4 | 6	4 | 6	4 | 6	6 | 9	4 | 6	4 | 6

ANCHORAGE NOTES:

1. ANCHOR TYPES:
   - 1 - #14 WOOD SCREW, STEEL (G5) & JAMB ANCHOR PLATE, ITEM 20 (FEMALE JAMB, ITEM 7)
   - 2 - 5/16" ELCO TAPCONS W/O JAMB ANCHOR PLATE
   - 2a - 5/16" ELCO TAPCONS & JAMB ANCHOR PLATE, ITEM 20 (FEMALE JAMB, ITEM 7)
   - 3 - 1/4" ELCO TAPCONS & JAMB ANCHOR PLATE, ITEM 20 (FEMALE JAMB, ITEM 7)

2. ANCHOR LOCATIONS ARE BASED ON THE FOLLOWING TESTED DIMENSIONS AT FULL DP.

HEAD - 4" MAX. FROM TOP CORNERS
16" MAX ANCHOR TO ANCHOR
JAMBS - 5 1/2" MAX. FROM TOP/BOTTOM CORNERS
16" MAX ANCHOR TO ANCHOR
8" MAX. ABOVE/BELOW MTG. RAIL
SILL - ANCHORS NOT REQUIRED.

TABLE KEY:

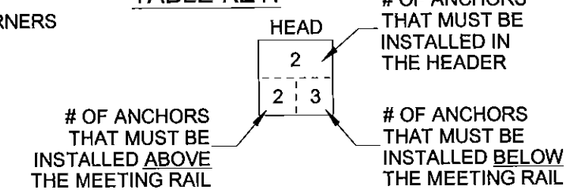

EXAMPLE:
56.125" X 91.125" WINDOW USING 5/16" MASONRY ANCHORS, NO JAMB ANCHOR PLATE, INTO CONCRETE.

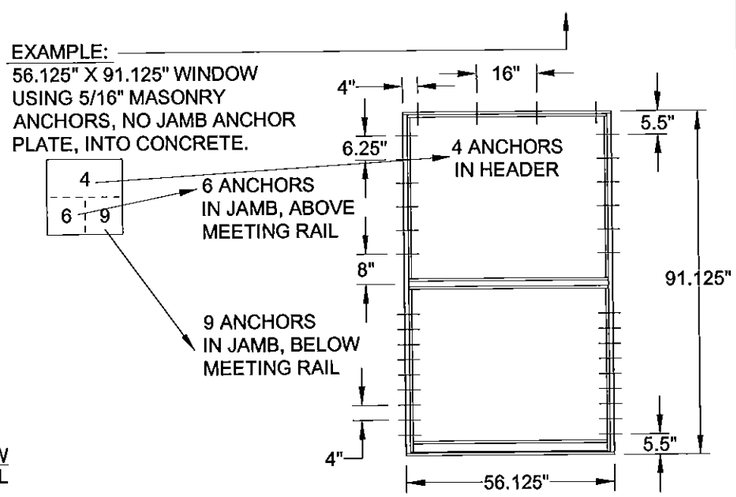

PRODUCT REVISED
as complying with the Florida Building Code
Acceptance No 15-0612.11
Expiration Date Dec. 6, 2017
By Manuel Perez
Miami Dade Product Control

ANTHONY LYNN MILLER
LICENSE
No. 58705
8/19/15
STATE OF FLORIDA
PROFESSIONAL ENGINEER
A. LYNN MILLER, P.E.
FL P.E.# 58705

Revsd By:	Date:	Revisions:	
Revsd By:	Date:	Revisions:	
Revsd By: J.R.	Date: 06/02/15	Revisions: C	NO CHANGES THIS SHEET
Drawn By: J.R.	Date: 07/12/07	Checked By: J.R.	Date: 7/13/07

1070 TECHNOLOGY DRIVE
N. VENICE, FL 34275
P.O. BOX 1529
NOKOMIS, FL 34274

PGT Visibly Better

Description: ANCHORAGE QUANTITIES
Title: ALUM. SINGLE HUNG WINDOW, IMP. (LM&SM)

Series/Model:	Scale:	Sheet:	Drawing No.	Rev:
SH3000	NTS	8 of 11	3000B-7-07	C

TABLE 4. HEAD & JAMB ANCHOR QUANTITY FOR DESIGN PRESSURES UP TO +/-105 PSF

WINDOW WIDTH	WINDOW HEIGHT 36				48				60				72				84				91			
	1, Wood w/ Anchor Plate	2, Concrete w/o Anchor Plate	2a, Concrete w/ Anchor Plate	3, Concrete w/ Anchor Plate	1, Wood w/ Anchor Plate	2, Concrete w/o Anchor Plate	2a, Concrete w/ Anchor Plate	3, Concrete w/ Anchor Plate	1, Wood w/ Anchor Plate	2, Concrete w/o Anchor Plate	2a, Concrete w/ Anchor Plate	3, Concrete w/ Anchor Plate	1, Wood w/ Anchor Plate	2, Concrete w/o Anchor Plate	2a, Concrete w/ Anchor Plate	3, Concrete w/ Anchor Plate	1, Wood w/ Anchor Plate	2, Concrete w/o Anchor Plate	2a, Concrete w/ Anchor Plate	3, Concrete w/ Anchor Plate	1, Wood w/ Anchor Plate	2, Concrete w/o Anchor Plate	2a, Concrete w/ Anchor Plate	3, Concrete w/ Anchor Plate
24	2	2	2	2	2	2	2	2	2	2	2	2	2	2	2	2	2	2	2	2	2	2	2	2
	2 | 2	2 | 2	2 | 2	2 | 2	2 | 2	2 | 2	2 | 2	2 | 2	3 | 3	3 | 3	3 | 3	3 | 3	3 | 3	3 | 3	3 | 3	3 | 3	3 | 3	3 | 3	3 | 3	3 | 3	3 | 3	3 | 3	3 | 3	3 | 3	3 | 3
30	3	3	3	3	3	3	3	3	3	3	3	3	3	3	3	3	3	3	3	3	3	3	3	3
	2 | 2	2 | 2	2 | 2	2 | 2	2 | 2	2 | 2	2 | 2	2 | 2	3 | 3	3 | 3	3 | 3	3 | 3	3 | 3	3 | 3	3 | 3	3 | 3	3 | 4	3 | 3	3 | 3	3 | 3	3 | 3	3 | 4	3 | 3	3 | 3
36	3	3	3	3	3	3	3	3	3	3	3	3	3	3	3	3	3	3	3	3	3	3	3	3
	2 | 2	2 | 2	2 | 2	2 | 2	2 | 2	2 | 3	2 | 2	2 | 2	3 | 3	3 | 3	3 | 3	3 | 3	3 | 3	3 | 4	3 | 3	3 | 3	3 | 3	4 | 4	3 | 3	3 | 3	3 | 3	4 | 5	3 | 3	3 | 3
42	4	4	4	4	4	4	4	4	4	4	4	4	4	4	4	4	4	4	4	4	4	4	4	4
	2 | 2	2 | 2	2 | 2	2 | 2	2 | 2	2 | 3	2 | 2	2 | 2	3 | 3	3 | 4	3 | 3	3 | 3	3 | 3	3 | 4	3 | 3	3 | 3	3 | 4	4 | 5	3 | 4	3 | 4	3 | 4	4 | 6	3 | 4	3 | 4
48	4	4	4	4	4	4	4	4	4	4	4	4	4	4	4	5	4	4	4	5	4	4	4	5
	2 | 2	2 | 3	2 | 2	2 | 2	2 | 2	2 | 3	2 | 2	2 | 2	3 | 3	3 | 4	3 | 3	3 | 3	3 | 3	4 | 5	3 | 4	3 | 4	3 | 4	4 | 6	3 | 4	3 | 4	3 | 4	5 | 6	3 | 4	3 | 4
54	4	4	4	4	4	4	4	4	4	4	4	5	4	4	4	6	4	4	4	6	4	4	4	6
	2 | 2	2 | 3	2 | 2	2 | 2	2 | 3	2 | 4	2 | 3	2 | 3	3 | 3	3 | 5	3 | 3	3 | 3	3 | 4	4 | 6	3 | 4	3 | 4	3 | 5	5 | 7	3 | 5	3 | 5	4 | 5	5 | 7	4 | 5	4 | 5
56	4	4	4	4	4	4	4	5	4	4	4	5	4	4	4	6	4	4	4	6	4	4	4	7
	2 | 2	2 | 3	2 | 2	2 | 2	2 | 3	2 | 4	2 | 3	2 | 3	3 | 3	3 | 5	3 | 3	3 | 3	3 | 4	4 | 6	3 | 4	3 | 4	3 | 5	5 | 7	3 | 5	3 | 5	4 | 5	5 | 8	4 | 5	4 | 5

ANCHORAGE NOTES:

1. ANCHOR TYPES:
   - 1 - #14 WOOD SCREW, STEEL (G5) & JAMB ANCHOR PLATE, ITEM 20 (FEMALE JAMB, ITEM 7)
   - 2 - 5/16" ELCO TAPCONS W/O JAMB ANCHOR PLATE
   - 2a - 5/16" ELCO TAPCONS & ANCHOR PLATE, ITEM 20 (FEMALE JAMB, ITEM 7)
   - 3 - 1/4" ELCO TAPCONS & ANCHOR PLATE, ITEM 20 (FEMALE JAMB, ITEM 7)

2. ANCHOR LOCATIONS ARE BASED ON THE FOLLOWING TESTED DIMENSIONS AT FULL DP.

HEAD - 4" MAX. FROM TOP CORNERS
16" MAX ANCHOR TO ANCHOR
JAMBS - 5 1/2" MAX. FROM TOP/BOTTOM CORNERS
16" MAX ANCHOR TO ANCHOR
8" MAX. ABOVE/BELOW MTG. RAIL
SILL - ANCHORS NOT REQUIRED.

TABLE KEY:

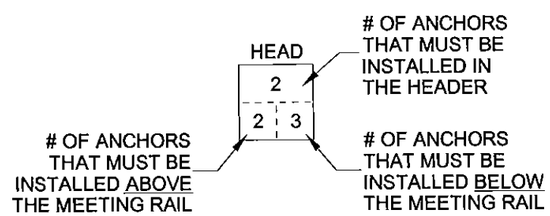

PRODUCT REVISED
as complying with the Florida
Building Code
Acceptance No 15-0612.11
Expiration Date Dec. 6, 2017
By Manuel Perez
Miami-Dade Product Control

ANTHONY LYNN MILLER
LICENSE
No. 58705
STATE OF FLORIDA
PROFESSIONAL ENGINEER
8/19/15

A. LYNN MILLER, P.E.
FL P.E.# 58705

Revsd By:	Date:	Revisions:	
Revsd By:	Date:	Revisions:	
Revsd By: J.R.	Date: 06/02/15	Revisions: C	NO CHANGES THIS SHEET
Drawn By: J.R.	Date: 07/12/07	Checked By: J.R.	Date: 7/13/07

1070 TECHNOLOGY DRIVE
N. VENICE, FL 34275

P.O. BOX 1529
NOKOMIS, FL 34274

PGT
Visibly Better

Description: ANCHORAGE DESIGN PRESSURE

Title: ALUM. SINGLE HUNG WINDOW, IMP. (LM&SM)

Series/Model:	Scale:	Sheet:	Drawing No.	Rev:
SH3000	NTS	9 of 11	3000B-7-07	C

TABLE 5. HEAD & JAMB ANCHOR QUANTITY FOR DESIGN PRESSURES UP TO +/-90 PSF

WINDOW WIDTH	WINDOW HEIGHT 36				48				60				72				84				91			
	1, Wood w/ Anchor Plate	2, Concrete w/o Anchor Plate	2a, Concrete w/ Anchor Plate	3, Concrete w/ Anchor Plate	1, Wood w/ Anchor Plate	2, Concrete w/o Anchor Plate	2a, Concrete w/ Anchor Plate	3, Concrete w/ Anchor Plate	1, Wood w/ Anchor Plate	2, Concrete w/o Anchor Plate	2a, Concrete w/ Anchor Plate	3, Concrete w/ Anchor Plate	1, Wood w/ Anchor Plate	2, Concrete w/o Anchor Plate	2a, Concrete w/ Anchor Plate	3, Concrete w/ Anchor Plate	1, Wood w/ Anchor Plate	2, Concrete w/o Anchor Plate	2a, Concrete w/ Anchor Plate	3, Concrete w/ Anchor Plate	1, Wood w/ Anchor Plate	2, Concrete w/o Anchor Plate	2a, Concrete w/ Anchor Plate	3, Concrete w/ Anchor Plate
24	2	2	2	2	2	2	2	2	2	2	2	2	2	2	2	2	2	2	2	2	2	2	2	2
	2 | 2	2 | 2	2 | 2	2 | 2	2 | 2	2 | 2	2 | 2	2 | 2	3 | 3	3 | 3	3 | 3	3 | 3	3 | 3	3 | 3	3 | 3	3 | 3	3 | 3	3 | 3	3 | 3	3 | 3	3 | 3	3 | 3	3 | 3	3 | 3
30	3	3	3	3	3	3	3	3	3	3	3	3	3	3	3	3	3	3	3	3	3	3	3	3
	2 | 2	2 | 2	2 | 2	2 | 2	2 | 2	2 | 2	2 | 2	2 | 2	3 | 3	3 | 3	3 | 3	3 | 3	3 | 3	3 | 3	3 | 3	3 | 3	3 | 3	3 | 3	3 | 3	3 | 3	3 | 3	3 | 3	3 | 3	3 | 3
36	3	3	3	3	3	3	3	3	3	3	3	3	3	3	3	3	3	3	3	3	3	3	3	3
	2 | 2	2 | 2	2 | 2	2 | 2	2 | 2	2 | 2	2 | 2	2 | 2	3 | 3	3 | 3	3 | 3	3 | 3	3 | 3	3 | 3	3 | 3	3 | 3	3 | 4	3 | 3	3 | 3	3 | 3	3 | 4	3 | 3	3 | 3	3 | 3
42	4	4	4	4	4	4	4	4	4	4	4	4	4	4	4	4	4	4	4	4	4	4	4	4
	2 | 2	2 | 2	2 | 2	2 | 2	2 | 2	2 | 3	2 | 2	2 | 2	3 | 3	3 | 3	3 | 3	3 | 3	3 | 3	3 | 4	3 | 3	3 | 3	3 | 4	3 | 3	3 | 3	4 | 5	3 | 3	3 | 3	3 | 3
48	4	4	4	4	4	4	4	4	4	4	4	4	4	4	4	4	4	4	4	4	4	4	4	4
	2 | 2	2 | 2	2 | 2	2 | 2	2 | 2	2 | 3	2 | 2	2 | 2	3 | 3	3 | 4	3 | 3	3 | 3	3 | 3	3 | 4	3 | 3	3 | 3	4 | 5	3 | 4	3 | 4	3 | 4	4 | 6	3 | 4	3 | 4
54	4	4	4	4	4	4	4	4	4	4	4	4	4	4	4	5	4	4	4	5	4	4	4	5
	2 | 2	2 | 2	2 | 2	2 | 2	2 | 2	2 | 3	2 | 2	2 | 2	3 | 3	3 | 4	3 | 3	3 | 3	3 | 3	3 | 5	3 | 3	3 | 3	3 | 4	4 | 6	3 | 4	3 | 4	3 | 4	4 | 6	3 | 4	3 | 4
56	4	4	4	4	4	4	4	4	4	4	4	5	4	4	4	5	4	4	4	6	4	4	4	6
	2 | 2	2 | 3	2 | 2	2 | 2	2 | 2	2 | 3	2 | 2	2 | 2	3 | 3	3 | 4	3 | 3	3 | 3	3 | 3	3 | 5	3 | 4	3 | 4	3 | 4	4 | 6	3 | 4	3 | 4	3 | 4	5 | 6	3 | 4	3 | 4

ANCHORAGE NOTES:

1. ANCHOR TYPES:
   - 1 - #14 WOOD SCREW, STEEL (G5) & JAMB ANCHOR PLATE, ITEM 20 (FEMALE JAMB, ITEM 7)
   - 2 - 5/16" ELCO TAPCONS W/O JAMB ANCHOR PLATE
   - 2a - 5/16" ELCO TAPCONS & JAMB ANCHOR PLATE, ITEM 20 (FEMALE JAMB, ITEM 7)
   - 3 - 1/4" ELCO TAPCONS & JAMB ANCHOR PLATE, ITEM 20 (FEMALE JAMB, ITEM 7)

2. ANCHOR LOCATIONS ARE BASED ON THE FOLLOWING TESTED DIMENSIONS AT FULL DP.

   HEAD - 4" MAX. FROM TOP CORNERS
   16" MAX ANCHOR TO ANCHOR
   JAMBS - 5 1/2" MAX. FROM TOP/BOTTOM CORNERS
   16" MAX ANCHOR TO ANCHOR
   8" MAX. ABOVE/BELOW MTG. RAIL
   SILL - ANCHORS NOT REQUIRED.

TABLE KEY:

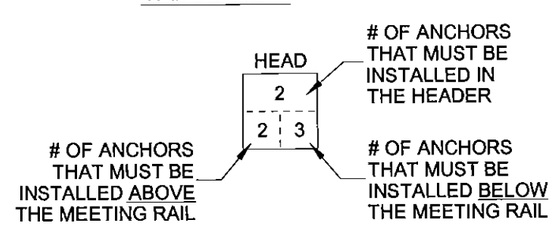

PRODUCT REVISED
as complying with the Florida Building Code
Acceptance No 15-0612.11
Expiration Date Dec. 6, 2017
By Manuel Perez
Miami Dade Product Control

ANTHONY LYNN MILLER
LICENSE
No. 58705
STATE OF FLORIDA
PROFESSIONAL ENGINEER
8/19/15

A. LYNN MILLER, P.E.
FL P.E.# 58705

Revsd By:	Date:	Revisions:	
Revsd By:	Date:	Revisions:	
Revsd By: J.R.	Date: 06/02/15	Revisions: C	NO CHANGES THIS SHEET
Drawn By: J.R.	Date: 07/12/07	Checked By: J.R.	Date: 7/13/07

1070 TECHNOLOGY DRIVE
N. VENICE, FL 34275

P.O. BOX 1529
NOKOMIS, FL 34274

PGT
Visibly Better

Description: ANCHORAGE 1/4"
Title: ALUM. SINGLE HUNG WINDOW, IMP. (LM&SM)

Series/Model:	Scale:	Sheet:	Drawing No.	Rev:
SH3000	NTS	10 of 11	3000B-7-07	C

EGRESS OPENINGS FOR 1/1 WINDOWS

TABLE 6.

WINDOW WIDTH	WINDOW HEIGHT 68	70	72	74	76	78	80	82	84	86	88	90	92
24.625													
26			Does not meet Egress										
28													
30						Meets Egress for 5.0 ft^2							
32													
34													
36							Meets Egress for 5.7 ft^2						
38													
40 & Greater													

EGRESS NOTES:

FLORIDA BUILDING CODE, REQUIRES 20" IN WIDTH, 24" IN HEIGHT, AND 5.7 SQUARE FEET OF CLEAR OPENING (5.0 SQUARE FEET ON GROUND FLOOR), TO MEET EGRESS REQUIREMENTS.

PRODUCT REVISED
as complying with the Florida
Building Code
Acceptance No 15-0612.11
Expiration Date Dec. 6, 2017
By Manuel Perez
Miami Dade Product Control

ANTHONY LYNN MILLER
LICENSE
No. 58705
8/19/15
STATE OF FLORIDA
PROFESSIONAL ENGINEER

A. LYNN MILLER, P.E.
FL P.E.# 58705

Revsd By:	Date:	Revisions:	
Revsd By:	Date:	Revisions:	
Revsd By: J.R.	Date: 06/02/15	Revisions: C	NO CHANGES THIS SHEET
Drawn By: J.R.	Date: 07/12/07	Checked By: J.R.	Date: 7/13/07

1070 TECHNOLOGY DRIVE
N. VENICE, FL 34275

P.O. BOX 1529
NOKOMIS, FL 34274

PGT
Visibly Better

Description: EGRESS CHART

Title: ALUM. SINGLE HUNG WINDOW, IMP. (LM&SM)

Series/Model:	Scale:	Sheet:	Drawing No.	Rev:
SH3000	NTS	11 of 11	3000B-7-07	C