MIAMI-DADE COUNTY
DEPARTMENT OF REGULATORY AND ECONOMIC RESOURCES (RER)
BOARD AND CODE ADMINISTRATION DIVISION

MIAMI-DADE COUNTY
PRODUCT CONTROL SECTION
11805 SW 26 Street, Room 208
T (786) 315-2590 F (786) 315-2599
www.miamidade.gov/economy

NOTICE OF ACCEPTANCE (NOA)

General Impact Glass & Windows Corp.
290 West 78 Road
Hialeah, FL 33014

SCOPE:

This NOA is being issued under the applicable rules and regulations governing the use of construction materials. The documentation submitted has been reviewed and accepted by Miami-Dade County RER - Product Control Section to be used in Miami Dade County and other areas where allowed by the Authority Having Jurisdiction (AHJ).

This NOA shall not be valid after the expiration date stated below. The Miami–Dade County Product Control Section (In Miami–Dade County) and/or the AHJ (in areas other than Miami–Dade County) reserve the right to have this product or material tested for quality assurance purposes. If this product or material fails to perform in the accepted manner, the manufacturer will incur the expense of such testing and the AHJ may immediately revoke, modify, or suspend the use of such product or material within their jurisdiction. RER reserves the right to revoke this acceptance, if it is determined by Miami–Dade County Product Control Section that this product or material fails to meet the requirements of the applicable building code.

This product is approved as described herein, and has been designed to comply with the Florida Building Code, including the High Velocity Hurricane Zone.-

DESCRIPTION: Series "11000 High Impact 9'0" Aluminum Sliding Glass Door – L.M.I.

APPROVAL DOCUMENT: Drawing No. **15-161**, titled "Series 11000 Impact Sliding Glass Door", sheets 1 thru 7, 7A, 8 and 9 thru 18 of 18, dated 06/04/15, with revision #1 dated 06/04/15, prepared by Tilteco, Inc., signed and sealed by Walter A. Tillit, Jr., P.E., bearing the Miami-Dade County Product Control Revision stamp with the Notice of Acceptance number and expiration date by the Miami-Dade County Product Control Section.

MISSILE IMPACT RATING: Large and Small Missile Impact Resistant

LABELING: Each unit shall bear a permanent label with the manufacturer's name or logo, city, state, model/series, and following statement: "Miami-Dade County Product Control Approved", unless otherwise noted herein.

RENEWAL of this NOA shall be considered after a renewal application has been filed and there has been no change in the applicable building code negatively affecting the performance of this product.

TERMINATION of this NOA will occur after the expiration date or if there has been a revision or change in the materials, use, and/or manufacture of the product or process. Misuse of this NOA as an endorsement of any product, for sales, advertising or any other purposes shall automatically terminate this NOA. Failure to comply with any section of this NOA shall be cause for termination and removal of NOA.

ADVERTISEMENT: The NOA number preceded by the words Miami-Dade County, Florida, and followed by the expiration date may be displayed in advertising literature. If any portion of the NOA is displayed, then it shall be done in its entirety.

INSPECTION: A copy of this entire NOA shall be provided to the user by the manufacturer or its distributors and shall be available for inspection at the job site at the request of the Building Official.

This NOA **revises NOA# 13-0930.13** and consists of this page 1 and evidence pages E-1 and E-2, as well as approval document mentioned above.

The submitted documentation was reviewed by **Manuel Perez, P.E.**

MIAMI-DADE COUNTY APPROVED

9/14/15

General Impact Glass & Windows Corp.

NOTICE OF ACCEPTANCE: EVIDENCE SUBMITTED

A. DRAWINGS

1. Manufacturer's die drawings and sections.
   (Submitted under NOA# 08-1003.06)
2. Drawing No. **15-161**, titled "Series 11000 Impact Sliding Glass Door", sheets 1 thru 7, 7A, 8 and 9 thru 18 of 18, dated 06/04/15, with revision #1 dated 06/04/15, prepared by Tilteco, Inc., signed and sealed by Walter A. Tillit, Jr., P.E.

B. TESTS

1. Test reports on: 1) Air Infiltration Test, per FBC, TAS 202-94
   2) Uniform Static Air Pressure Test, Loading per FBC TAS 202-94
   3) Water Resistance Test, per FBC, TAS 202-94
   4) Large Missile Impact Test per FBC, TAS 201-94
   5) Cyclic Wind Pressure Loading per FBC, TAS 203-94
   6) Forced Entry Test, per FBC 2411 3.2.1, TAS 202-94

   along with marked-up drawings and installation diagram of an aluminum sliding glass door, prepared by Fenestration Testing Laboratory, Inc., Test Report No. **FTL-5626**, dated 07/22/08, and addendum letter dated 11/14/08, signed and sealed by Carlos Rionda, P.E.
   (Submitted under NOA# 08-1003.06)

C. CALCULATIONS

1. Anchor verification calculations and structural analysis, complying with **FBC-5th Edition (2014)**, prepared by Tilteco, Inc., dated 06/04/15, signed and sealed by Walter A. Tillit, Jr., P.E.
2. Glazing complies with **ASTM E1300-04**

D. QUALITY ASSURANCE

1. Miami-Dade Department of Regulatory and Economic Resources (RER)

E. MATERIAL CERTIFICATIONS

1. Notice of Acceptance No. **14-0916.10** issued to **Kuraray America, Inc.** for their **"Butacite® PVB Glass Interlayer"** dated 04/25/15, expiring on 12/11/16.

Manuel Perez, P.E.
Product Control Examiner
NOA No. 15-0622.15
Expiration Date: December 11, 2018
Approval Date: September 10, 2015

NOTICE OF ACCEPTANCE: EVIDENCE SUBMITTED

F. STATEMENTS

1. Statement letter of conformance, complying with **FBC-5th Edition (2014)**, dated June 12, 2015, issued by Tilteco, Inc., signed and sealed by Walter A. Tillit, Jr., P.E.
2. Statement letter of conformance, complying with **FBC-2010**, and of no financial interest, dated September 17, 2008, and January 27, 2012, issued by Tilteco, Inc., signed and sealed by Walter A. Tillit, Jr., P.E.
   (Submitted under NOA# 08-1003.06)
3. Laboratory compliance letter for Test Report No. **FTL-5626,** issued by Fenestration Testing Laboratory, Inc., dated 11/14/08, signed and sealed by Joseph Chan, P.E.
   (Submitted under NOA# 08-1003.06)

G. OTHERS

1. Notice of Acceptance No. **13-0930.13**, issued to General Impact Glass & Windows Corp. for their Series "11000 High Impact" 9'0" Aluminum Sliding Glass Door – L.M.I., approved on 12/05/13 and expiring on 12/11/18.

Manuel Perez

Manuel Perez, P.E.
Product Control Examiner
NOA No. 15-0622.15
Expiration Date: December 11, 2018
Approval Date: September 10, 2015

GENERAL NOTES:

1. SERIES 11000 HIGH IMPACT SLIDING GLASS DOOR, SHOWN ON THIS PRODUCT APPROVAL DOCUMENT (P.A.D.) HAS BEEN VERIFIED FOR COMPLIANCE IN ACCORDANCE WITH THE 2014 (5th EDITION) OF THE FLORIDA BUILDING CODE. SERIES 11000 HIGH IMPACT SLIDING GLASS DOOR MAY BE INSTALLED AT HIGH VELOCITY HURRICANE ZONES.

   DESIGN WIND LOADS SHALL BE DETERMINED AS PER SECTION **1620** OF THE ABOVE MENTIONED CODE, USING ASCE 7-10 AND SHALL NOT EXCEED THE MAXIMUM (A.S.D.) DESIGN PRESSURE RATINGS INDICATED ON NOTE 3 BELOW.

   IN ORDER TO VERIFY THE ABOVE CONDITION, ULTIMATE DESIGN WIND LOADS DETERMINED PER ASCE 7-10 SHALL BE FIRST REDUCED TO A.S.D. DESIGN WIND LOADS BY MULTIPLYING THEM BY 0.6 IN ORDER TO COMPARE THESE W/ MAX. (A.S.D.) DESIGN PRESSURE RATINGS INDICATED ON NOTE 3 BELOW.

   IN ORDER TO VERIFY THAT ANCHORS ON THIS P.A.D., AS TESTED, WERE NOT OVERSTRESSED, A 33% INCREASE IN ALLOWABLE STRESS FOR WIND LOADS WAS **NOT** USED IN THEIR ANALYSIS. A DURATION FACTOR C_D=1.60 WAS USED TO VERIFY FASTENERS IN WOOD.
   THIS DOOR'S ADEQUACY FOR IMPACT AND WIND RESISTANCE HAS BEEN VERIFIED IN ACCORDANCE WITH SECTION 1626 OF THE ABOVE MENTIONED CODE AS PER PROTOCOLS TAS-201, TAS-202, TAS-203, PER FENESTRATION TESTING LABORATORY, INC. LAB REPORT # 5626 AND AS PER SUBMITTED STRUCTURAL CALCULATIONS, PERFORMED AS PER SECTION **1616** OF THE FLORIDA BUILDING CODE.

2. REMAINING COMPONENTS FOR THIS SLIDING GLASS DOOR SYSTEM SHALL BE AS INDICATED ON BILL OF MATERIALS AND COMPONENT SHEETS 2 AND 3 RESPECTIVELY OF THIS DRAWING.

3. **MAXIMUM A.S.D. DESIGN PRESSURE RATINGS FOR THESE DOORS SHALL BE AS SHOWN ON SHEET 4. SEE DOOR ELEVATIONS ON SHEETS 4 THRU 7 FOR QUALIFIED CONFIGURATIONS.**

4. **THIS SERIES 11000 HIGH IMPACT SLIDING GLASS DOOR WILL NOT REQUIRE A HURRICANE PROTECTION DEVICE.**

5. **THIS SERIES 11000 HIGH IMPACT SLIDING GLASS DOOR IS APPROVED FOR AIR AND WATER INFILTRATION.**

6. ALL ALUMINUM EXTRUSIONS SHALL BE ALUMINUM ASSOCIATION 6063-T6 ALLOY AND TEMPER, WITH Fy=25.0 ksi MINIMUM. THE THICKNESS OF ALL EXTRUSIONS SHALL BE AS SHOWN ON THIS DRAWING.

7 ALL SCREWS USED FOR ASSEMBLY CONNECTIONS (METAL TO METAL) TO BE STAINLESS STEEL 304 OR 316 AISI SERIES OR CORROSION RESISTANT COATED CARBON STEEL AS PER DIN 50018 WITH 50 ksi YIELD STRENGTH AND 90 ksi TENSILE STRENGTH & SHALL COMPLY W/ FLORIDA BUILDING CODE SECTION 2411.3.3.4.

8. WOOD BUCKS BY OTHERS, MUST BE ANCHORED PROPERLY TO TRANSFER LOADS TO THE BUILDING STRUCTURE. WOOD BUCKS MUST BE SOUTHERN PINE, G=0.55. AND SHALL COMPLY WITH SECTIONS 2411.3.3.3 & 2326 OF THE 2007 & 2010 EDITIONS OF THE FLORIDA BUILDING CODE.

9. **ANCHOR NOTES:** EMBEDMENT AND EDGE DISTANCE ARE BEYOND ANY FINISH (SEE SCHEDULE ON SHEET 7A).

(A) TO EXISTING POURED CONCRETE: (Min. f'c = 3.192 ksi), MIN. EDGE DISTANCE = 2 1/2".
- 1/4"ø TAPCON W/ 1 1/4" MIN. EMBEDMENT, AS MANUFACTURED BY ITW BUILDEX, INC (COMPONENT (29)), THRU 1" P.T. WOOD BUCK.
- 1/4"ø KWIK-CON II W/ 1 1/4" MIN. EMBEDMENT, AS MANUFACTURED BY HILTI, INC (COMPONENT (29)), THRU 1" P.T. WOOD BUCK.

(B) TO EXISTING A.S.T.M. C-90 CONCRETE BLOCK MIN. EDGE DISTANCE = 2 1/2".
- 1/4"ø TAPCON W/ 1 1/4" MIN. EMBEDMENT, AS MANUFACTURED BY ITW BUILDEX, INC. (COMPONENT (29)), THRU 1" P.T. WOOD BUCK.
- 1/4"ø KWIK-CON II W/ 1 1/4" MIN. EMBEDMENT, AS MANUFACTURED BY HILTI, INC (COMPONENT (29)), THRU 1" P.T. WOOD BUCK.

(C) TO EXISTING 2x P.T. WOOD BUCK. MIN. EDGE DISTANCE = 1".
- 1/4"ø TAPCON W/ 1 1/2" MIN. THREADED PENETRATION, AS MANUFACTURED BY ITW BUILDEX, INC. (COMPONENT (29)).

(D) TO EXISTING MIN. 1/8" THICK ALUMINUM MEMBER (6063-T5 ALLOY) MIN. EDGE DISTANCE = 1/2".
- 1/4"ø-14 TEK SCREW, MIN. 1" LONG, AS MANUFACTURED BY ITW BUILDEX, INC. (COMPONENT (30)).

(E) TO EXISTING MIN. 12 GAGE STEEL MEMBER (ASTM A-500, A-653 OR A-36) MIN. EDGE DISTANCE = 1/2".
- 1/4"ø-14 TEK SCREW, MIN. 1" LONG, AS MANUFACTURED BY ITW BUILDEX, INC. (COMPONENT (30)).

10. PROVIDE 1/4" MAX. SHIM SPACE (TYP.).

11. SERIES 11000 HIGH IMPACT SLIDING GLASS DOOR MANUFACTURER LABEL SHALL BE PLACED ON A READILY VISIBLE LOCATION. ONE LABEL SHALL BE PLACED FOR EVERY UNIT. LABEL SHALL READ AS FOLLOWS:

    GENERAL IMPACT GLASS AND WINDOWS, CORP.
    HIALEAH, FLORIDA
    MIAMI-DADE COUNTY PRODUCT CONTROL APPROVED.

12. (a) THIS P.A.D. PREPARED BY THIS ENGINEER IS GENERIC AND DOES NOT PROVIDE INFORMATION FOR A SITE SPECIFIC PROJECT; i.e. WHERE THE SITE CONDITIONS DEVIATE FROM THE P.A.D.

    (b) CONTRACTOR TO BE RESPONSIBLE FOR THE SELECTION, PURCHASE AND INSTALLATION INCLUDING LIFE SAFETY OF THIS PRODUCT, BASED ON THIS P.A.D., PROVIDED HE/SHE DOES NOT DEVIATE FROM THE CONDITIONS DETAILED ON THIS DOCUMENT. CONSTRUCTION SAFETY AT SITE IS THE CONTRACTOR'S RESPONSIBILITY.

    (c) THIS P.A.D. WILL BE CONSIDERED INVALID IF ALTERED BY ANY MEANS.

    (d) ORIGINAL P.A.D. SHALL BEAR THE DATE AND ORIGINAL SEAL AND SIGNATURE OF THE PROFESSIONAL ENGINEER OF RECORD THAT PREPARED IT.

THIS DRAWING SHALL ONLY BE USED TO OBTAIN PERMITS IN THE STATE OF FLORIDA

PRODUCT REVISED
as complying with the Florida Building Code
Acceptance No 15-0622.15
Expiration Date Dec. 11, 2018
By Manuel Perez
Miami Dade Product Control

MIAMI DADE COUNTY

WALTER A. TILLIT JR. LICENSE No. 44167 STATE OF FLORIDA PROFESSIONAL ENGINEER
SEAL/SIGNATURE/DATE

FLORIDA BUILDING CODE (High Velocity Hurricane Zone)

©2015 TILTECO INC.

TILTECO INC.
TILLIT TESTING & ENGINEERING COMPANY
6355 N.W. 36th St., Ste. 305, VIRGINIA GARDENS, Fl 33166
Phone : (305)871-1530 . Fax : (305)871-1531
e-mail: tilteco@aol.com
EB-0006719
WALTER A. TILLIT Jr., P.E.
FLORIDA Lic. 44167

SERIES 11000 HIGH IMPACT SLIDING GLASS DOOR

GENERAL IMPACT GLASS & WINDOWS
The Clear Solution

290 WEST 78 ROAD
HIALEAH, FL. 33014
PHONE: (305) 558-8103
FAX: (305) 558-6665
www.generalimpact.com

REV. NO	DESCRIPTION	DATE	REV. No	DESCRIPTION	DATE
1	OLD 12-003	06/04/15	3		
2			4		

DRAWN BY: F.R.L.
06/04/15 DATE
15-161 DRAWING No

BILL OF MATERIALS

ITEM #	PART #	DESCRIPTION	MATERIAL
1	GIC301–1	FRAME HEAD	6063–T6
2	GIC302–1	FRAME SILL	6063–T6
3	GIC303–1	FRAME JAMB	6063–T6
4	GIC304–1	TOP RAIL	6063–T6
5	GIC305–1	BOTTOM RAIL	6063–T6
6	GIC306–1	LOCK STILE	6063–T6
7	GIC307–1	MEETING STILE OUTER INTERLOCK	6063–T6
8	GIC308–1	MEETING STILE INNER INTERLOCK	6063–T6
9	GIC309–1	CENTERMATE FEMALE ASTRAGAL	6063–T6
10	GIC310	GLAZING BEAD	6063–T6
11	GIC311	INTERLOCK STIFFENER	6063–T6
12	GIC312	RETAINER CLIP, 4" LONG	6063–T6
13	GIC313	FIXED PANEL CLIP, 8" LONG	6063–T6
14	–	OPTIONAL INTERIOR REINFORCEMENT FOR FEMALE ASTRAGAL ONLY REQ'D FOR 7' & 8' DOORS	6063–T6
15	–	OPTIONAL EXTERIOR REINFORCEMENT FOR FEMALE ASTRAGAL ONLY REQ'D FOR 7' & 8' DOORS	6063–T6
17	W223511K	TOP RAIL + JAMB + STILE + ASTRAGAL WEATHER STRIPPING	NEOPRENE
18	GIC315	BOTTOM RAIL SEAL	VINYL
19	GIC314	SETTING BLOCK	NEOPRENE
20	GIC316	GLAZING BULB	NEOPRENE
21	FASTENER	PANEL ASSEMBLY SCREWS, #10x1 1/4" P.H. S.D.S.	S.T. STEEL
22	FASTENER	FRAME ASSEMBLY SCREWS, #10x1" F.H. S.D.S.	S.T. STEEL
23	FASTENER	FIXED PANEL CLIP FASTENER, (3) #10x1/2" PH S.D.S.	S.T. STEEL
24	–	PANEL GUIDE (TOP ONLY) AT EACH END OF EACH PANEL @ 2/PANEL	CELCON
25	#1939–6010–55	GLASS PANEL ROLLER ASSEMBLY AT (2) (25) PER OPERABLE PANEL @ EACH END OF PANEL	ST. STEEL
26	FASTENER	(2)1/4"ø–20x1" LONG T.H. S.S.M.S. TO STILES/ATRAGAL FOR EACH ROLLER ASSEMBLY FASTENING	STEEL
27	2300–10SS / #623Z	HANDLE LOCK (INTERIOR AND EXTERIOR) @ 36 1/2"/BOTTOM WITH LOCK INSTALLATION SCREW (2) #6–32x3/8" F.H. M.S. S.S. INCLUDES ZAMAK HANDLE @ 35 1/2"/BOTTOM W/ #10–24x1 3/4" O.H. M.S. S.S.	ST. STEEL
28	2500–1061Z	LOCK STRIKE PLATE W/ STRIKE PLATE MOUNTING SCREW (2) #10x1 1/4" P.H. S.D.S.	S.T. STEEL
29	ANCHORS	1/4"ø ITW BUILDEX TAPCON ANCHOR OR 1/4"ø HILTI KWIK–CON II ANCHOR (SEE SCHEDULE ON SHEET 7A)	STEEL
30	ANCHORS	1/4"ø–14 ITW BUILDEX TEK SCREW (SEE SCHEDULE ON SHEET 7A)	STEEL
31	GLAZING SILICONE SEALANT	STRUCTURAL SILICONE GE SCS2800, DOW CORNING 795 & PECORA 896	STRUCTURAL SILICONE
33	GLASS	0.458" OVERALL LAMINATED GLASS W/ (1) 0.185" HEAT STRENGTHENED GLASS + (1) 0.088" BUTACITE PVB, INTERLAYER BY KURARAY AMERICA, INC. + (1) 0.185" HEAT STRENGTHENED GLASS.	–
34	–	BUMPON SPACER, 1/4" DIAMETER HALF SPHERE, CLEAR. 3" FROM CORNERS MAX. AND 12" O.C. (MAX.), AT MID–GLASS BITE ELEVATION, BY FRANK LOWE RUBBEL AND GASKET FLB–28, CLEAR.	SILICONE

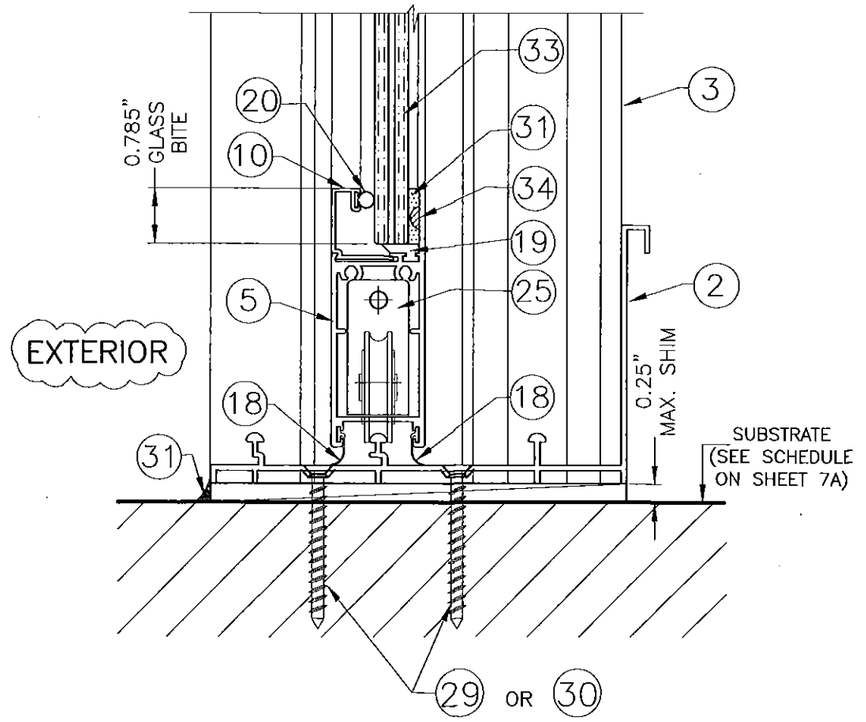

GLAZING DETAIL (SECTION)

SCALE: 1/2"=1"

PRODUCT REVISED
as complying with the Florida Building Code
Acceptance No 15-0622.15
Expiration Date Dec. 11, 2018
By Miami Dade Product Control

MIAMI DADE COUNTY

FLORIDA BUILDING CODE (High Velocity Hurricane Zone)

WALTER A. TILLIT JR LICENSE No. 44167 STATE OF FLORIDA PROFESSIONAL ENGINEER

E. SIGNATURE, DATE

© 2015 TILTECO INC.

TILTECO INC.
TILLIT TESTING & ENGINEERING COMPANY
6355 N.W. 36th. St., Ste. 305, VIRGINIA GARDENS, FL 33166
Phone : (305)871–1530 . Fax : (305)871–1531
e–mail: tilteco@aol.com
EB–0006719
WALTER A. TILLIT Jr., P.E.
FLORIDA Lic. 44167

SERIES 11000 HIGH IMPACT SLIDING GLASS DOOR

GENERAL IMPACT GLASS & WINDOWS
The Clear Solution
290 WEST 78 ROAD
HIALEAH, FL. 33014
PHONE: (305) 558–8103
FAX: (305) 558–6665
www.generalimpact.com

REV. NO	DESCRIPTION	DATE	REV. No	DESCRIPTION	DATE
1	OLD 12–003	08/04/15	3		
2	COMPONENT 33	09/02/15	4		

DRAWN BY: F.R.L.
06/04/15 DATE
15-161 DRAWING No

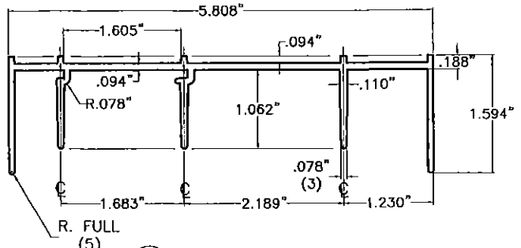

(1) FRAME HEAD
6063-T6
SCALE 1/2"=1"

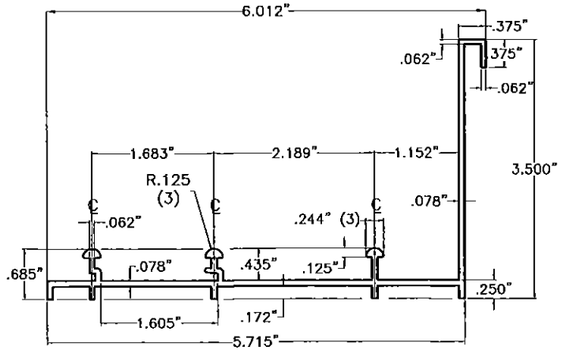

(2) FRAME SILL
6063-T6
SCALE 1/2"=1"

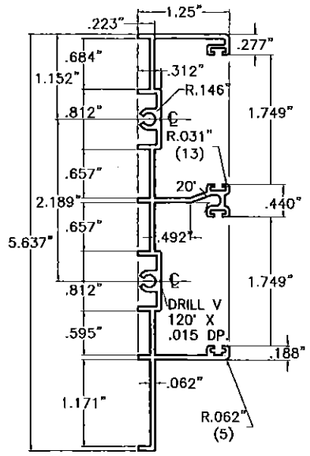

(3) FRAME JAMB
6063-T6
SCALE 1/2"=1"

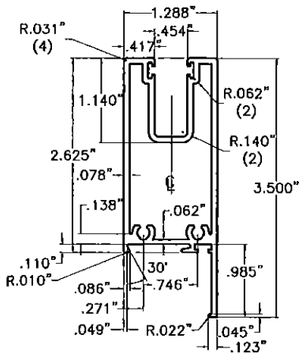

(4) TOP RAIL
6063-T6
SCALE 1/2"=1"

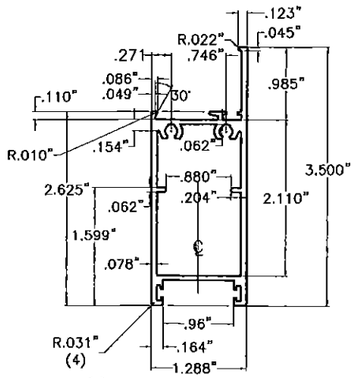

(5) BOTTOM RAIL
6063-T6
SCALE 1/2"=1"

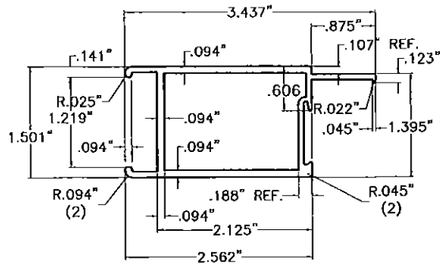

(6) LOCK STILE
6063-T6
SCALE 1/2"=1"

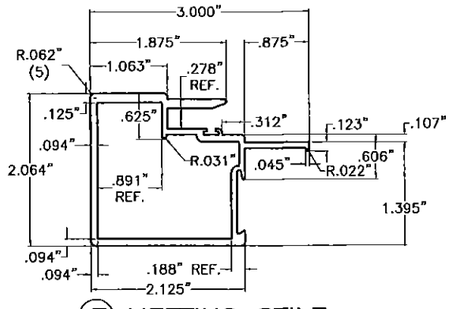

(7) MEETING STILE OUTER INTERLOCK
6063-T6
SCALE 1/2"=1"

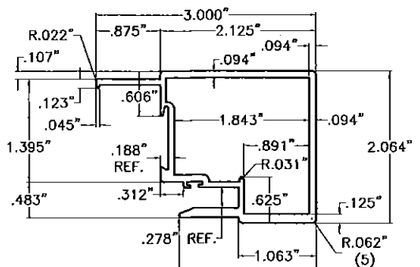

(8) MEETING STILE INNER INTERLOCK
6063-T6
SCALE 1/2"=1"

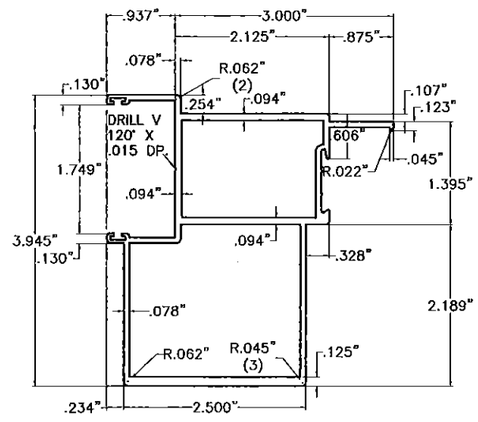

(9) CENTERMATE FEMALE ASTRAGAL
6063-T6
SCALE 1/2"=1"

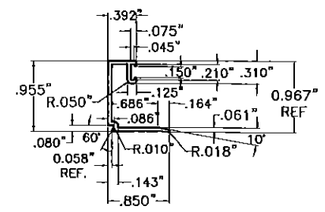

(10) GLAZING BEAD
6063-T6
SCALE 1/2"=1"

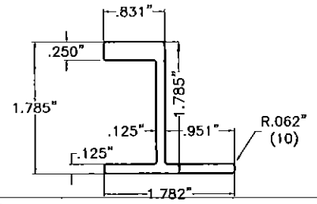

(11) INTERLOCK STIFFENER
6063-T6
SCALE 1/2"=1"

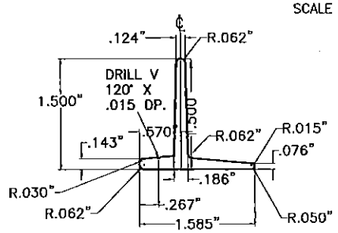

(12) RETAINER CLIP
6063-T6
4" LONG
SCALE 1/2"=1"

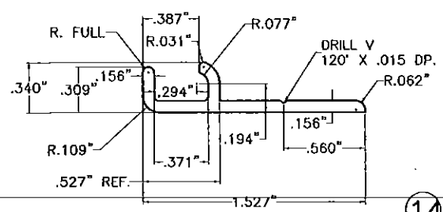

(13) FIXED PANEL CLIP
6063-T6
8" LONG
SCALE 1"=1"

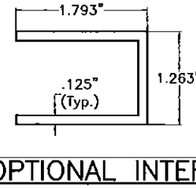

(14) OPTIONAL INTERIOR REINFORCEMENT FOR FEMALE ASTRAGAL
6063-T6
SCALE 1/2"=1"

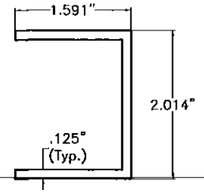

(15) OPTIONAL EXTERIOR REINFORCEMENT FOR FEMALE ASTRAGAL
6063-T6
SCALE 1/2"=1"

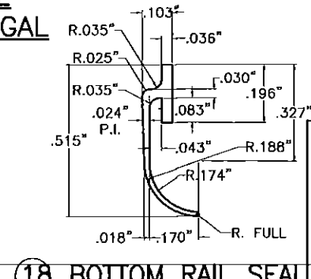

(18) BOTTOM RAIL SEAL
VINYL
SCALE 2"=1"

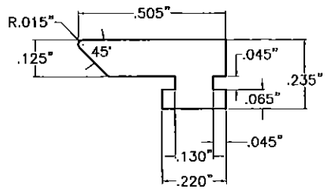

(19) SETTING BLOCK
NEOPRENE
SCALE 2"=1"

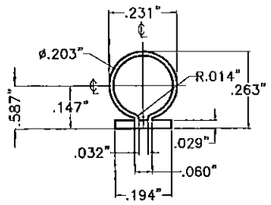

(20) GLAZING BULB
NEOPRENE
SCALE 2"=1"

COMPONENTS

PRODUCT REVISED
as complying with the Florida
Building Code
Acceptance No 15-0622.15
Expiration Date Dec. 11, 2018
By Manuel Perez
Miami-Dade Product Control

MIAMI DADE COUNTY

FLORIDA BUILDING CODE (High Velocity Hurricane Zone)

WALTER A. TILLIT JR. LICENSE No. 44167 STATE OF FLORIDA PROFESSIONAL ENGINEER

© 2015 TILTECO INC.

TILTECO INC.
TILLIT TESTING & ENGINEERING COMPANY
6355 N.W. 36th. St., Ste. 305, VIRGINIA GARDENS, Fl 33166
Phone : (305)871-1530 . Fax : (305)871-1531
e-mail: tilteco@aol.com
EB-0006719
WALTER A. TILLIT Jr., P.E.
FLORIDA Lic. 44167

SERIES 11000 HIGH IMPACT SLIDING GLASS DOOR

GENERAL IMPACT GLASS & WINDOWS
The Clear Solution
290 WEST 78 ROAD
HIALEAH, FL. 33014
PHONE: (305) 558-8103
FAX: (305) 558-6665
www.generalimpact.com

REV. NO	DESCRIPTION	DATE	REV. No	DESCRIPTION	DATE
1	OLD 12-003	06/04/15	3		
2			4		

DRAWN BY: F.R.L.
06/04/15 DATE
15-161 DRAWING No
SHEET 3 OF 18

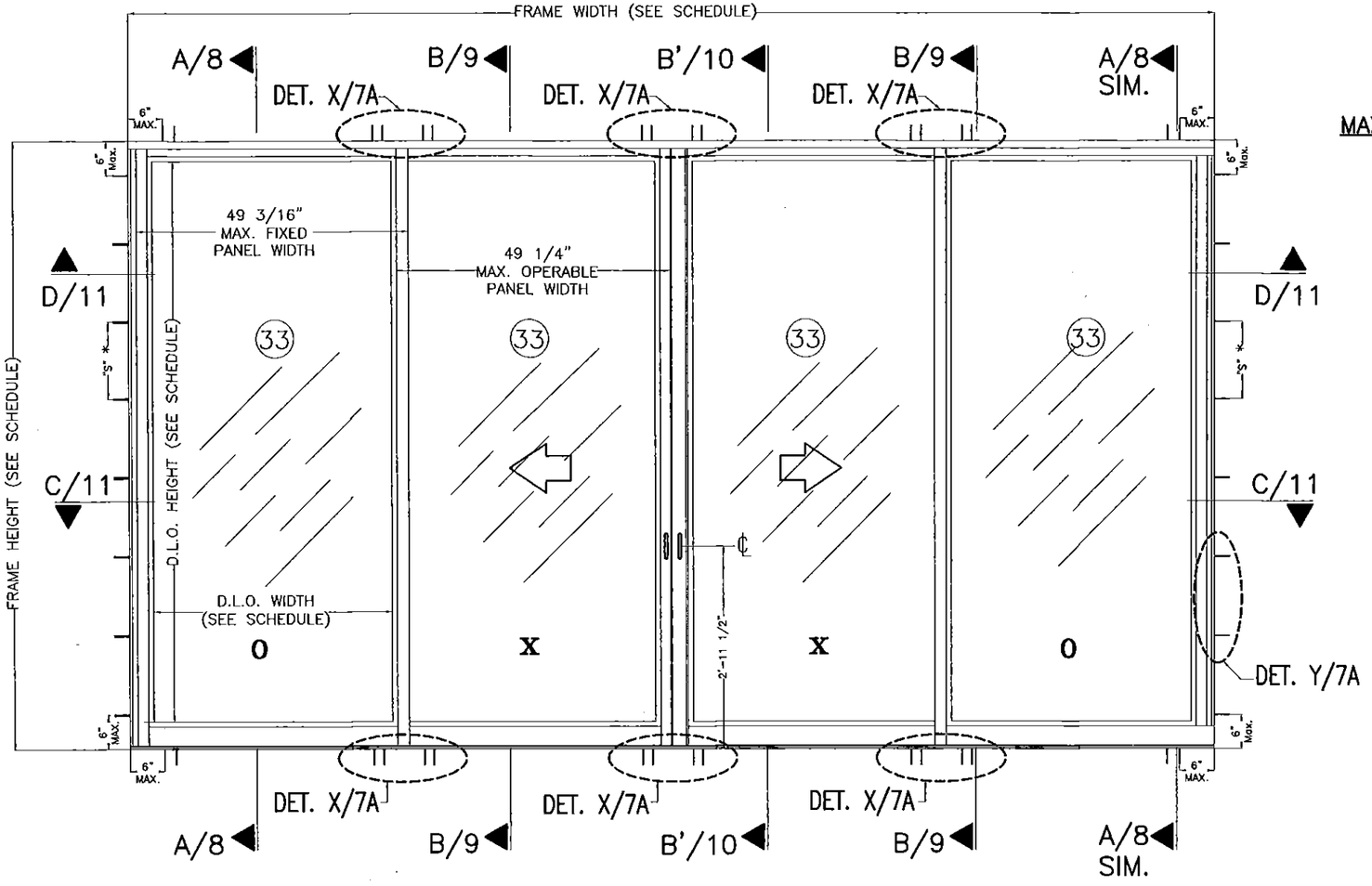

TYPICAL EXTERIOR ELEVATION (OXXO)

SCALE: 1/2" = 1'-0"

* SEE SHEET 7A FOR MAXIMUM ANCHOR SPACING AT JAMBS.

MAXIMUM A.S.D. DESIGN PRESSURE RATING SCHEDULE FOR A MAXIMUM FRAME HEIGHT, FRAME WIDTH, D.L.O. HEIGHT & D.L.O. WIDTH

MAX. A.S.D. DESIGN PRESSURE RATING	MAXIMUM FRAME HEIGHT	MAXIMUM FRAME WIDTH	MAXIMUM D.L.O. HEIGHT	MAXIMUM D.L.O. WIDTH
+85, −85 psf & 15 psf AT WATER	9'−0"	16'−0"	99 3/4"	42 3/4"
+91, −99 psf & 15 psf AT WATER	8'−0"	16'−0"	87 3/4"	42 3/4"
+100, −120 psf & 15 psf AT WATER	7'−0"	16'−0"	75 3/4"	42 3/4"

PRODUCT REVISED
as complying with the Florida Building Code
Acceptance No 15-0622.15
Expiration Date Dec. 11, 2018
By Miami Dade Product Control

MIAMI DADE COUNTY

FLORIDA BUILDING CODE (High Velocity Hurricane Zone)

WALTER A. TILLIT JR. LICENSE No. 44167 STATE OF FLORIDA PROFESSIONAL ENGINEER
SIGNATURE & DATE

© 2015 TILTECO INC.

TILTECO INC.
TILLIT TESTING & ENGINEERING COMPANY
6355 N.W. 36th. St., Ste. 305, VIRGINIA GARDENS, Fl 33166
Phone : (305)871-1530 . Fax : (305)871-1531
e-mail: tilteco@aol.com
EB-0006719
WALTER A. TILLIT Jr., P.E.
FLORIDA Lic. 44167

SERIES 11000 HIGH IMPACT SLIDING GLASS DOOR

DRAWN BY: F.R.L.

GENERAL IMPACT GLASS & WINDOWS
The Clear Solution
290 WEST 78 ROAD
HIALEAH, FL. 33014
PHONE: (305) 558-8103
FAX: (305) 558-6665
www.generalimpact.com

06/04/15
DATE

15-161
DRAWING No

REV. NO	DESCRIPTION	DATE	REV. No	DESCRIPTION	DATE
1	OLD 12-003	06/04/15	3		
2			4		

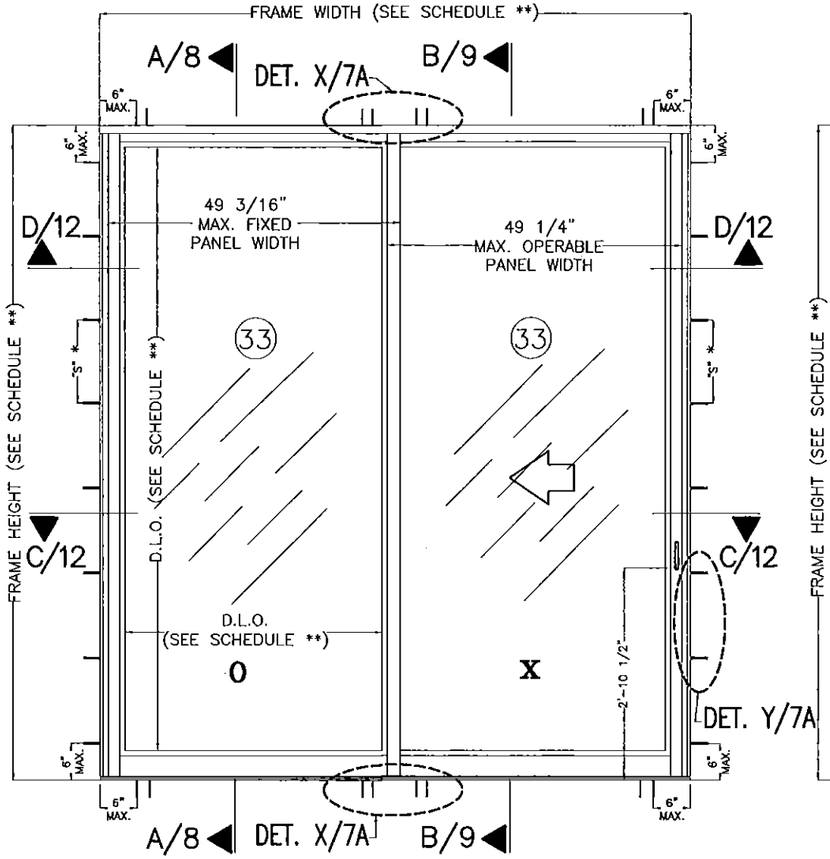

TYPICAL EXTERIOR ELEVATION (OX)

SCALE: 1/2" = 1'-0"

* SEE SHEET 7A FOR MAXIMUM ANCHOR SPACING AT JAMBS.

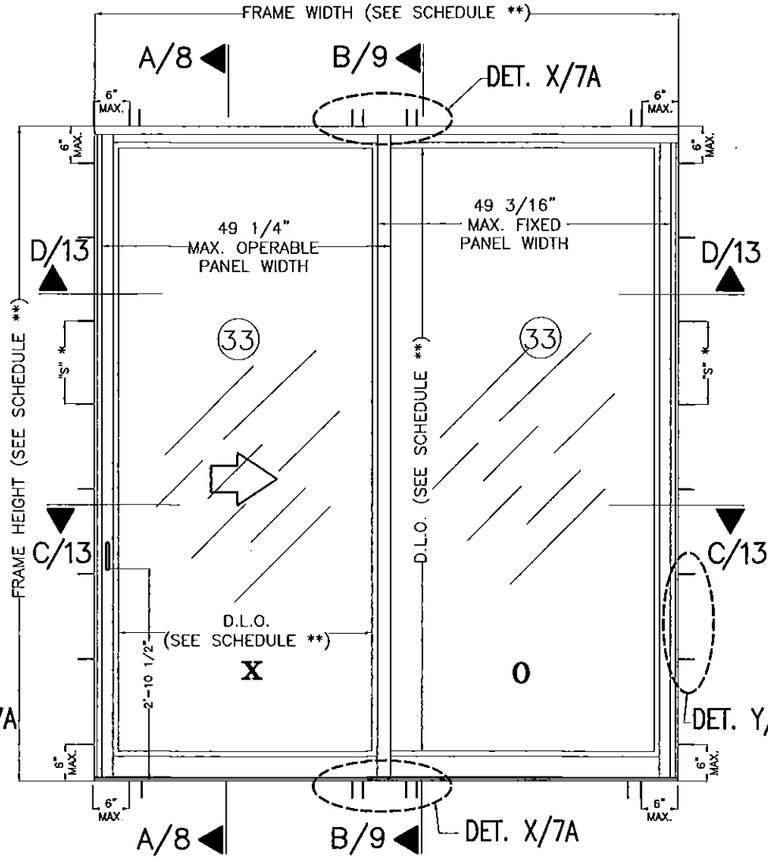

TYPICAL EXTERIOR ELEVATION (XO)

SCALE: 1/2" = 1'-0"

* SEE SHEET 7A FOR MAXIMUM ANCHOR SPACING AT JAMBS.

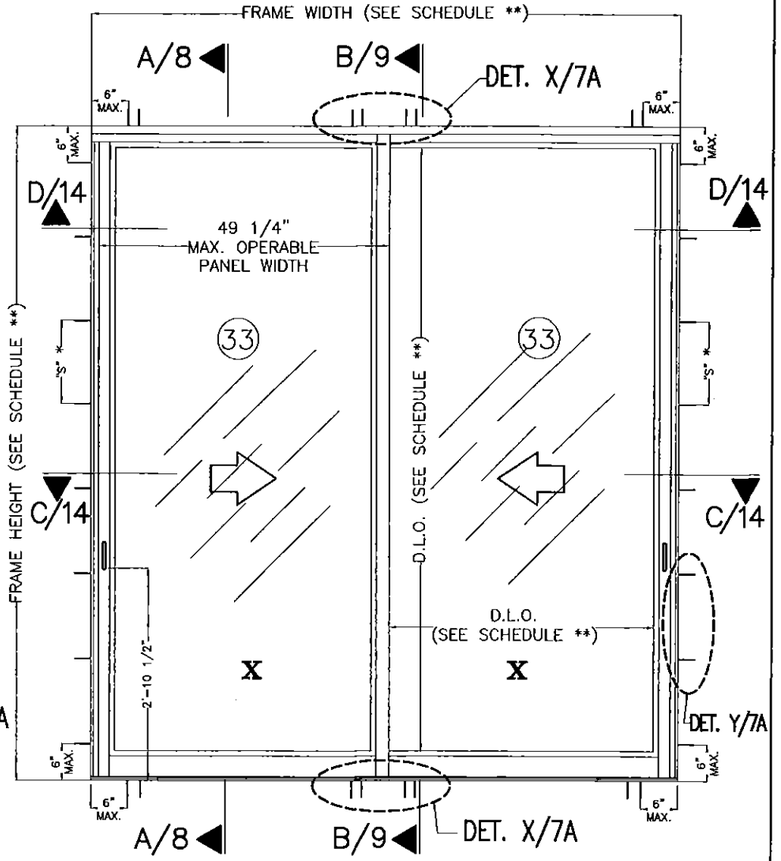

TYPICAL EXTERIOR ELEVATION (XX)

SCALE: 1/2" = 1'-0"

* SEE SHEET 7A FOR MAXIMUM ANCHOR SPACING AT JAMBS.

** FOR MAXIMUM FRAME & D.L.O. SEE SCHEDULE ON SHEET 4

PRODUCT REVISED
as complying with the Florida Building Code
Acceptance No 15-0622.15
Expiration Date Dec. 11, 2018
By Manuel Perez
Miami Dade Product Control

MIAMI DADE COUNTY

FLORIDA BUILDING CODE (High Velocity Hurricane Zone)

WALTER A. TILLIT JR. LICENSE No. 44167 STATE OF FLORIDA PROFESSIONAL ENGINEER
P.E. SIGNATURE / DATE

© 2015 TILTECO INC.

TILTECO INC.
TILLIT TESTING & ENGINEERING COMPANY
6355 N.W. 36th. St., Ste. 305, VIRGINIA GARDENS, Fl 33166
Phone : (305)871-1530 . Fax : (305)871-1531
e-mail: tilteco@aol.com
EB-0006719
WALTER A. TILLIT Jr., P.E.
FLORIDA Lic. 44167

SERIES 11000 HIGH IMPACT SLIDING GLASS DOOR

GENERAL IMPACT GLASS & WINDOWS
The Clear Solution
290 WEST 78 ROAD
HIALEAH, FL. 33014
PHONE: (305) 558-8103
FAX: (305) 558-6665
www.generalimpact.com

REV. NO	DESCRIPTION	DATE	REV. No	DESCRIPTION	DATE
1	OLD 12-003	06/04/15	3		
2			4		

DRAWN BY: F.R.L.
06/04/15 DATE
15-161 DRAWING No

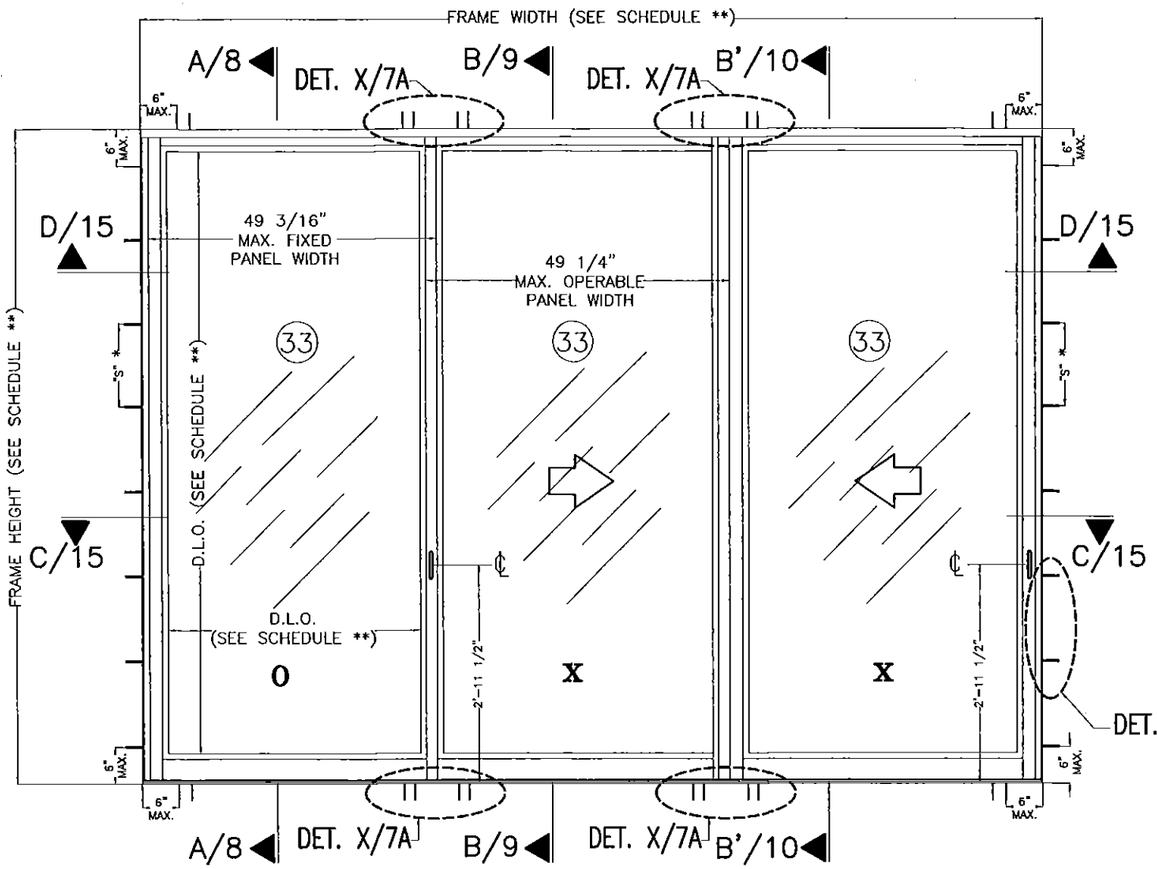

TYPICAL EXTERIOR ELEVATION (OXX)

SCALE: 1/2" = 1'-0"

* SEE SHEET 7A FOR MAXIMUM ANCHOR SPACING AT JAMBS.

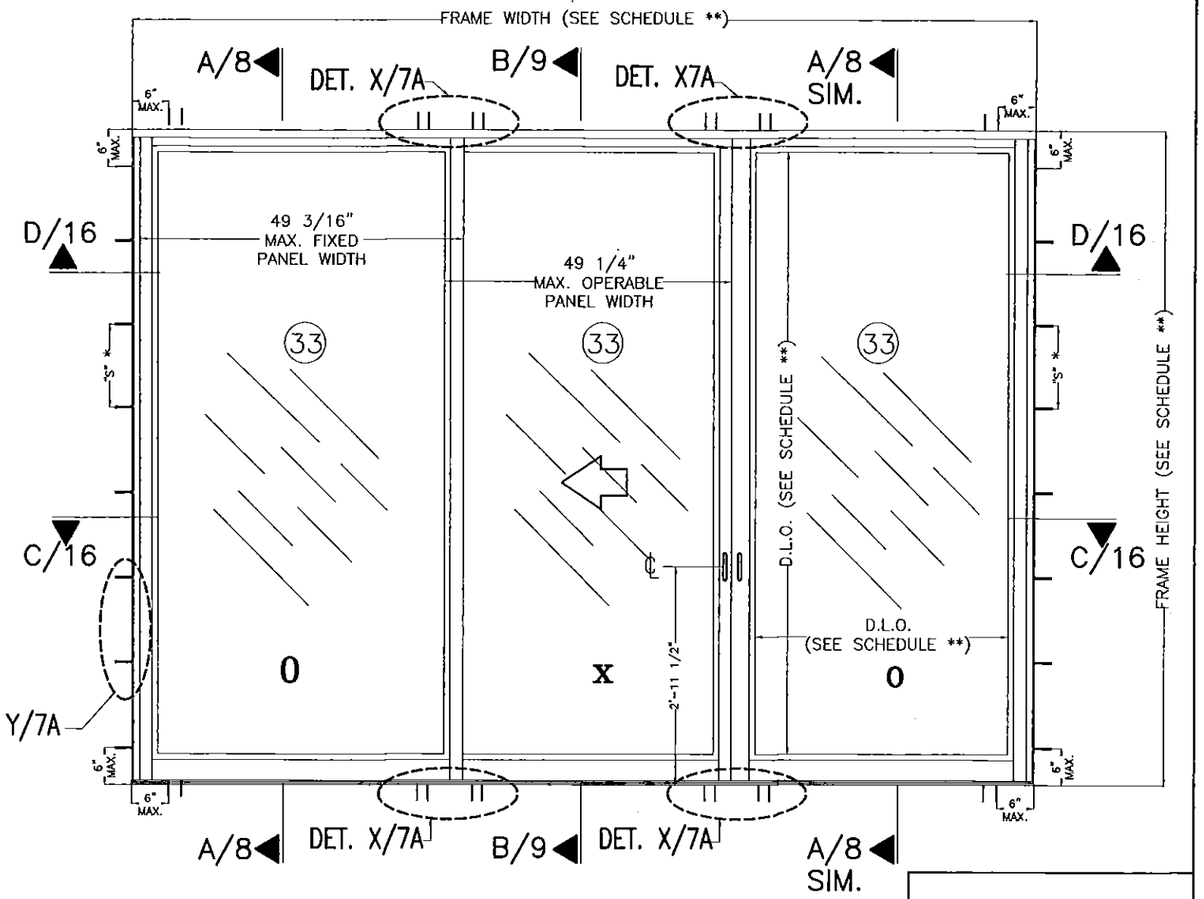

TYPICAL EXTERIOR ELEVATION (OXO)

SCALE: 1/2" = 1'-0"

* SEE SHEET 7A FOR MAXIMUM ANCHOR SPACING AT JAMBS.

** FOR MAXIMUM FRAME & D.L.O. SEE SCHEDULE ON SHEET 4

PRODUCT REVISED
as complying with the Florida Building Code
Acceptance No 15-0622.15
Expiration Date Dec. 11, 2018
By Manuel Perez
Miami-Dade Product Control

MIAMI DADE COUNTY

FLORIDA BUILDING CODE (High Velocity Hurricane Zone)

WALTER A. TILLIT JR. LICENSE No. 44167 STATE OF FLORIDA PROFESSIONAL ENGINEER

© 2015 TILTECO INC.

TILTECO INC.
TILLIT TESTING & ENGINEERING COMPANY
6355 N.W. 36th. St., Ste. 305, VIRGINIA GARDENS, Fl 33166
Phone : (305)871-1530 . Fax : (305)871-1531
e-mail: tilteco@aol.com
EB-0006719
WALTER A. TILLIT Jr., P.E.
FLORIDA Lic. 44167

SERIES 11000 HIGH IMPACT SLIDING GLASS DOOR

GENERAL IMPACT GLASS & WINDOWS
The Clear Solution
290 WEST 78 ROAD
HIALEAH, FL. 33014
PHONE: (305) 558-8103
FAX: (305) 558-6665
www.generalimpact.com

REV. NO	DESCRIPTION	DATE	REV. No	DESCRIPTION	DATE
1	OLD 12-903	06/04/15	3		
2			4		

DRAWN BY: F.R.L.

06/04/15 DATE

15-161 DRAWING No

SHEET 6 OF 18

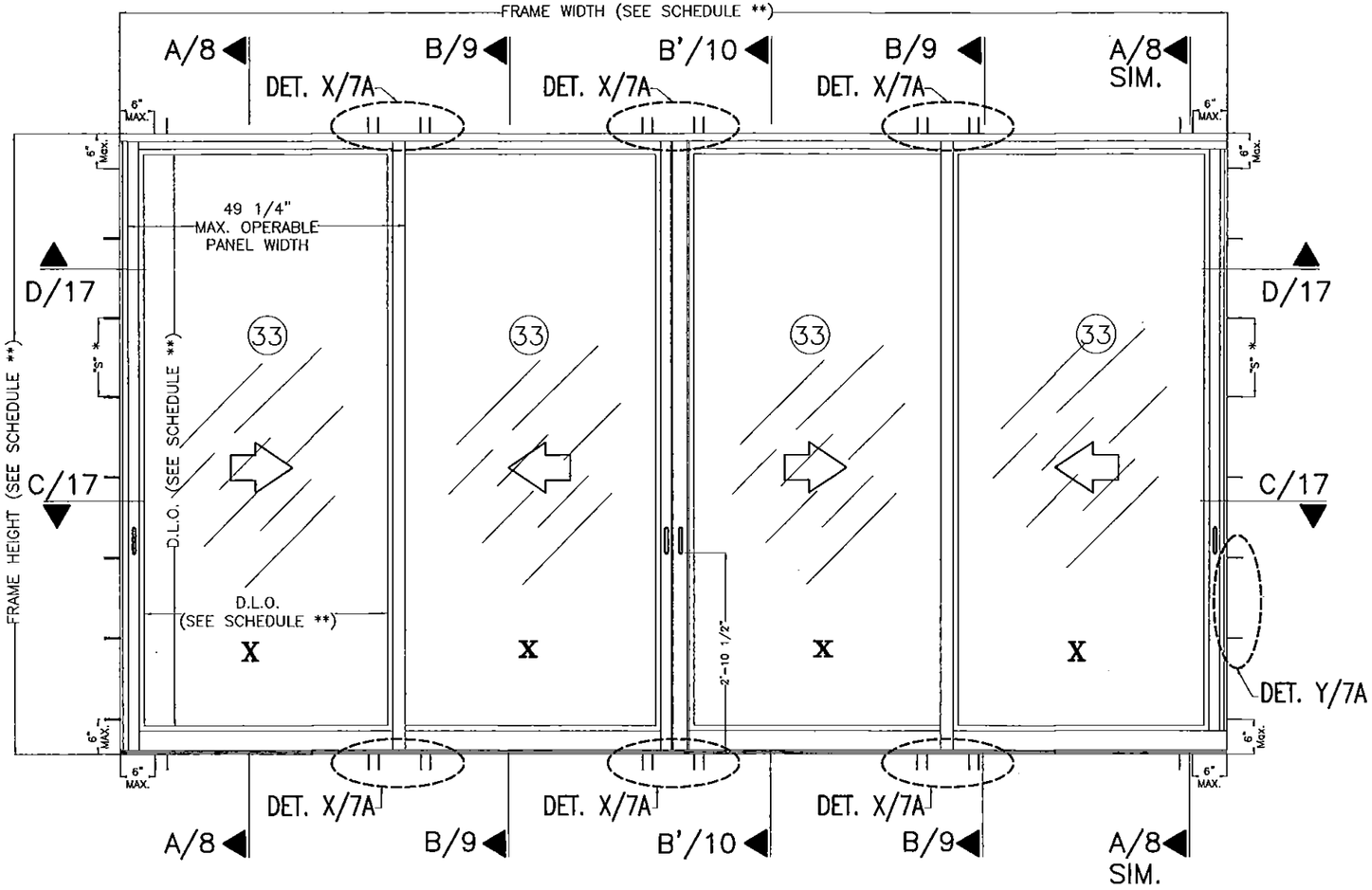

TYPICAL EXTERIOR ELEVATION (XXXX)

SCALE: 1/2" = 1'-0"

* SEE SHEET 7A FOR MAXIMUM ANCHOR SPACING AT JAMBS.

** FOR MAXIMUM FRAME & D.L.O. SEE SCHEDULE ON SHEET 4

PRODUCT REVISED
as complying with the Florida Building Code
Acceptance No 15-0622.15
Expiration Date Dec 11, 2018
By Manuel Perez
Miami Dade Product Control

MIAMI DADE COUNTY

FLORIDA BUILDING CODE (High Velocity Hurricane Zone)

WALTER A. TILLIT JR. LICENSE No. 44167 STATE OF FLORIDA PROFESSIONAL ENGINEER

© 2015 TILTECO INC.

TILTECO INC.
TILLIT TESTING & ENGINEERING COMPANY
6355 N.W. 36th. St., Ste. 305, VIRGINIA GARDENS, Fl 33166
Phone : (305)871-1530 . Fax : (305)871-1531
e-mail: tilteco@aol.com
EB-0006719
WALTER A. TILLIT Jr., P.E.
FLORIDA Lic. 44167

SERIES 11000 HIGH IMPACT SLIDING GLASS DOOR

DRAWN BY: F.R.L

GENERAL IMPACT GLASS & WINDOWS
The Clear Solution
290 WEST 78 ROAD
HIALEAH, FL. 33014
PHONE: (305) 558-8103
FAX: (305) 558-6665
www.generalimpact.com

06/04/15 DATE

15-161 DRAWING No

REV. NO	DESCRIPTION	DATE	REV. No	DESCRIPTION	DATE
1	OLD 12-003	06/04/15	3		
2			4		

NUMBER OF ANCHORS AT CLUSTER ◊ AT HEAD & SILL CONNECTION SCHEDULE FOR A GIVEN ANCHOR TYPE, SUBSTRATE & MAX. A.S.D. DESIGN PRESSURE RATING

MAXIMUM FRAME HEIGHT	ANCHOR TYPE	SUBSTRATE	MAX. A.S.D. DESIGN PRESSURE RATING	HEAD/SILL "n" # OF ANCHORS ◊ FOR TAPCON	FOR KWIK-CON II
9'-0"	1/4"ø TAPCON OR KWIK-CON II	POURED CONCRETE	+60, -60 psf	9	5
			+75, -75 psf	11	5
			+85, -85 psf	11	7
			+91, -99 psf	13	7
			+100, -120 psf	17	9
	1/4"ø TAPCON	WOOD	+60, -60 psf	11	N/A
			+75, -75 psf	13	
			+85, -85 psf	15	
			+91, -99 psf	17	
			+100, -120 psf	19	
	1/4"ø TEK SCREW	ALUMINUM MULLION OR STEEL MEMBER	+60, -60 psf	9	
			+75, -75 psf	11	
			+85, -85 psf	11	
			+91, -99 psf	13	
			+100, -120 psf	17	
8'-0"	1/4"ø TAPCON OR KWIK-CON II	POURED CONCRETE	+60, -60 psf	7	5
			+75, -75 psf	9	5
			+85, -85 psf	11	5
			+91, -99 psf	11	7
			+100, -120 psf	15	7
	1/4"ø TAPCON	WOOD	+60, -60 psf	9	N/A
			+75, -75 psf	11	
			+85, -85 psf	13	
			+91, -99 psf	15	
			+100, -120 psf	17	
	1/4"ø TEK SCREW	ALUMINUM MULLION OR STEEL MEMBER	+60, -60 psf	7	
			+75, -75 psf	9	
			+85, -85 psf	11	
			+91, -99 psf	11	
			+100, -120 psf	15	
7'-0"	1/4"ø TAPCON OR KWIK-CON II	POURED CONCRETE	+60, -60 psf	7	3
			+75, -75 psf	9	5
			+85, -85 psf	9	5
			+91, -99 psf	11	5
			+100, -120 psf	13	7
	1/4"ø TAPCON	WOOD	+60, -60 psf	7	N/A
			+75, -75 psf	9	
			+85, -85 psf	11	
			+91, -99 psf	13	
			+100, -120 psf	15	
	1/4"ø TEK SCREW	ALUMINUM MULLION OR STEEL MEMBER	+60, -60 psf	7	
			+75, -75 psf	9	
			+85, -85 psf	9	
			+91, -99 psf	11	
			+100, -120 psf	13	

◊ CORRESPONDS TO CLUSTER OF (29) OR (30) ANCHORS AT ℄ OF STILES/ASTRAGAL LOCATION (SEE DETAIL X)

MAXIMUM ANCHORS SPACING "S" * AT JAMBS CONNECTION SCHEDULE FOR A GIVEN ANCHOR TYPE, SUBSTRATE & MAX. A.S.D. DESIGN PRESSURE RATING

MAXIMUM FRAME HEIGHT	ANCHOR TYPE	SUBSTRATE	MAX. A.S.D. DESIGN PRESSURE RATING	JAMBS "n" # OF ANCHORS ◊ FOR TAPCON	FOR KWIK-CON II
9'-0" OR 8'-0" OR 7'-0"	1/4"ø TAPCON OR KWIK-CON II	POURED CONCRETE OR CONCRETE BLOCK	+60, -60 psf	18" o.c.	18" o.c.
			+75, -75 psf	18" o.c.	18" o.c.
			+85, -85 psf	18" o.c.	18" o.c.
			+91, -99 psf	16 1/2" o.c.	18" o.c.
			+100, -120 psf	13 1/2" o.c.	18" o.c.
	1/4"ø TAPCON	WOOD	+60, -60 psf	18" o.c.	N/A
			+75, -75 psf	18" o.c.	
			+85, -85 psf	16" o.c.	
			+91, -99 psf	13 1/2" o.c.	
			+100, -120 psf	11" o.c.	
	1/4"ø TEK SCREW	ALUMINUM MULLION OR STEEL MEMBER	+60, -60 psf	18" o.c.	
			+75, -75 psf	18" o.c.	
			+85, -85 psf	18" o.c.	
			+91, -99 psf	16 1/2" o.c.	
			+100, -120 psf	13 1/2" o.c.	

* CORRESPONDS TO THE SPACING OF TWO STAGGERED ANCHORS (SEE DETAIL Y)

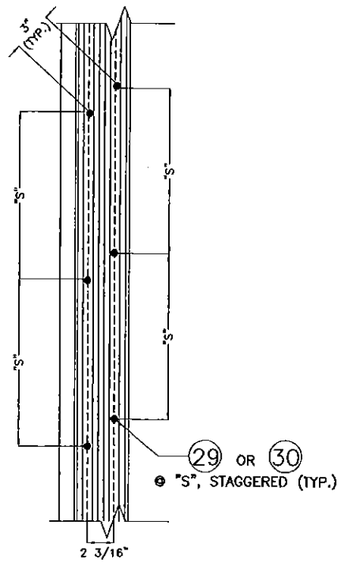

DETAIL Y-Y
JAMB CASE
N.T.S.

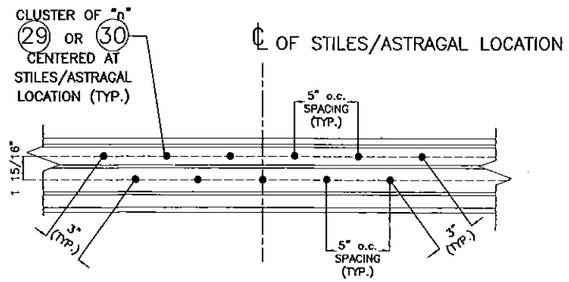

DETAIL X-X
HEAD & SILL CASE
N.T.S.

PRODUCT REVISED
as complying with the Florida Building Code
Acceptance No 15-0622.15
Expiration Date Dec 11, 2018
By Maxwell Perez
Miami Dade Product Control

MIAMI DADE COUNTY

FLORIDA BUILDING CODE (High Velocity Hurricane Zone)

WALTER A. TILLIT JR. LICENSE No. 44167 STATE OF FLORIDA PROFESSIONAL ENGINEER
P.E. SEAL/SIGNATURE/DATE

© 2015 TILTECO INC.

TILTECO INC.
TILLIT TESTING & ENGINEERING COMPANY
6355 N.W. 36th. St., Ste. 305, VIRGINIA GARDENS, Fl 33166
Phone : (305)871-1530 . Fax : (305)871-1531
e-mail: tilteco@aol.com
FB-0006719
WALTER A. TILLIT Jr., P.E.
FLORIDA Lic. 44167

SERIES 11000 HIGH IMPACT SLIDING GLASS DOOR

GENERAL IMPACT GLASS & WINDOWS
The Clear Solution
290 WEST 78 ROAD
HIALEAH, FL. 33014
PHONE: (305) 558-8103
FAX: (305) 558-6665
www.generalimpact.com

REV. NO	DESCRIPTION	DATE	REV. No	DESCRIPTION	DATE
1	OLD 12-003	06/04/15	3		
2			4		

DRAWN BY: F.R.L.
06/04/15 DATE
15-161 DRAWING No

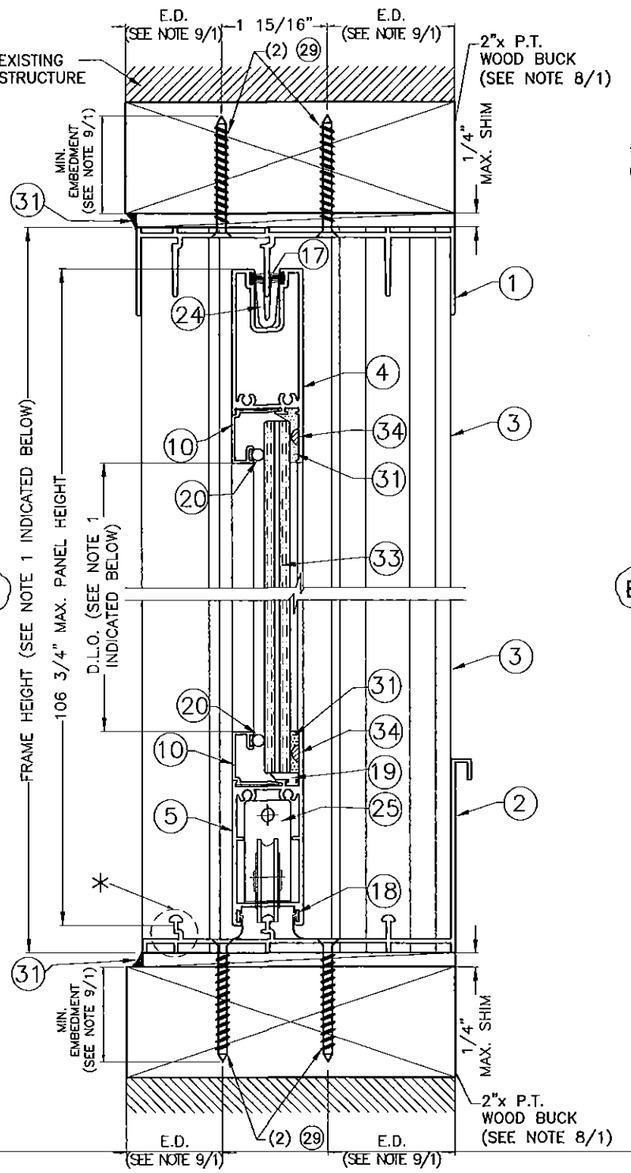

WOOD SUBSTRATE

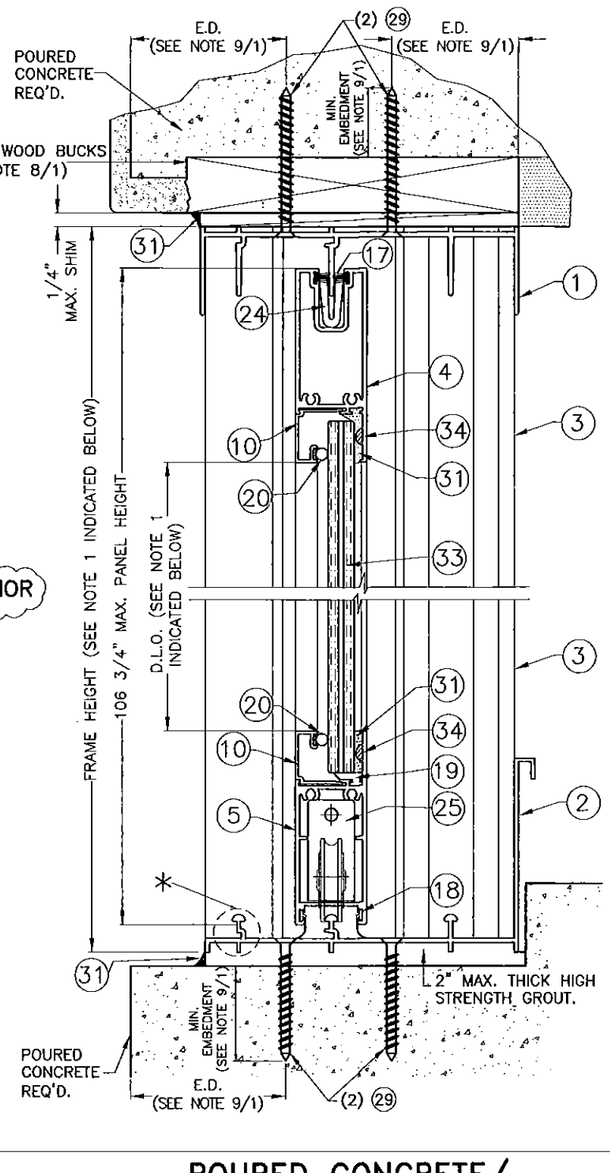

POURED CONCRETE/ CONCRETE BLOCK SUBSTRATE

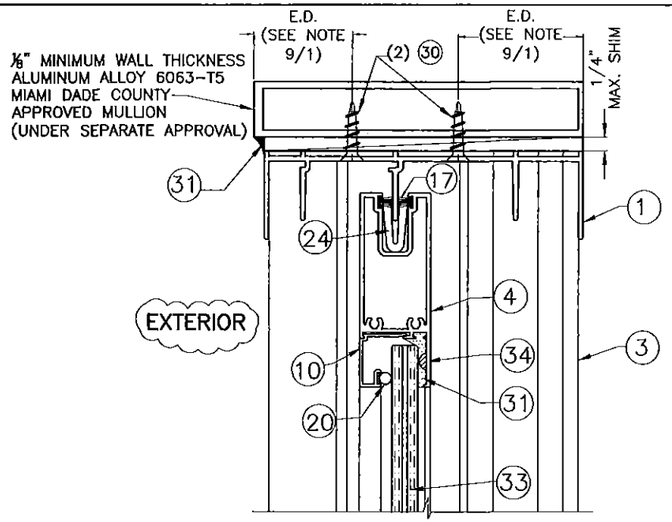

ALUMINUM MULLION SUBSTRATE

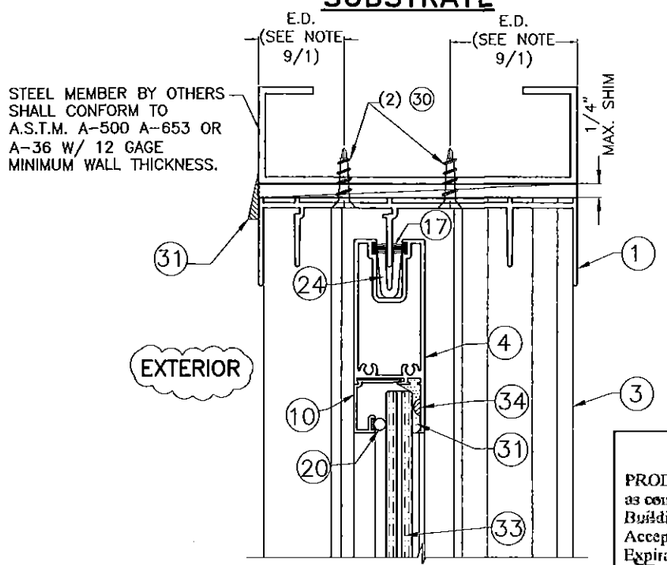

STEEL MEMBER SUBSTRATE

* (2) 1/4" LONG WEEP NOTCHES, (1) AT EACH END OF EACH SCREEN RETAINER TRACK AT (2)

SECTION A-A

SCALE: 3/8"=1"

NOTES:

1. FOR MAXIMUM FRAME & D.L.O. SEE SCHEDULE ON SHEET 4 & FOR ANCHOR'S CONCENTRATION NEEDED AT STILES/ASTRAGAL SEE SCHEDULE ON SHEET 7A.
2. SUBSTRATES CAN BE COMBINED AS APPLICABLE.

PRODUCT REVISED
as complying with the Florida Building Code
Acceptance No 15-0622.15
Expiration Date Dec. 11, 2018
By Manuel Perez
Miami Dade Product Control

MIAMI DADE COUNTY

WALTER A. TILLIT JR. LICENSE No. 44167 STATE OF FLORIDA PROFESSIONAL ENGINEER

FLORIDA BUILDING CODE (High Velocity Hurricane Zone)

© 2015 TILTECO INC.

TILTECO INC.
TILLIT TESTING & ENGINEERING COMPANY
6355 N.W. 36th. St., Ste. 305, VIRGINIA GARDENS, Fl 33166
Phone : (305)871-1530 . Fax : (305)871-1531
e-mail: tilteco@aol.com
EB-0006719
WALTER A. TILLIT Jr., P.E.
FLORIDA Lic. 44167

SERIES 11000 HIGH IMPACT SLIDING GLASS DOOR

GENERAL IMPACT GLASS & WINDOWS The Clear Solution

290 WEST 78 ROAD
HIALEAH, FL. 33014
PHONE: (305) 558-8103
FAX: (305) 558-6665
www.generalimpact.com

REV. NO	DESCRIPTION	DATE	REV. No	DESCRIPTION	DATE
1	OLD 12-003	06/04/15	3		
2			4		

DRAWN BY: F.R.L.
06/04/15 DATE
15-161 DRAWING No
SHEET 8 OF 18

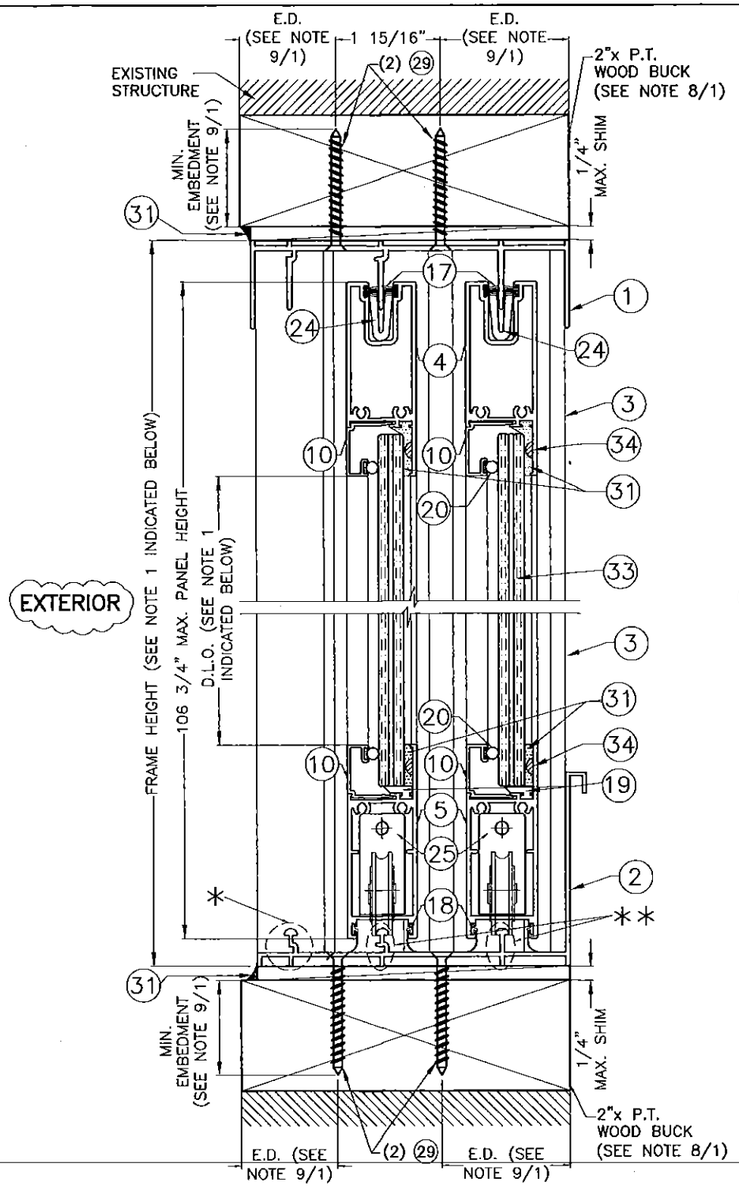

WOOD SUBSTRATE

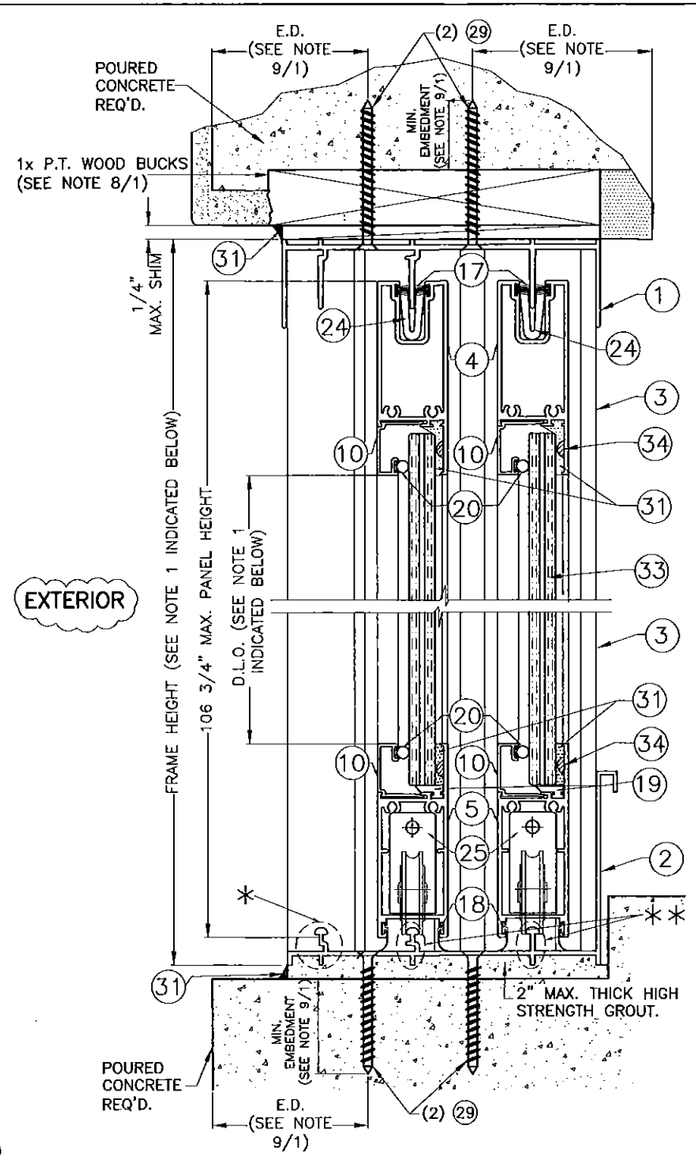

POURED CONCRETE/ CONCRETE BLOCK SUBSTRATE

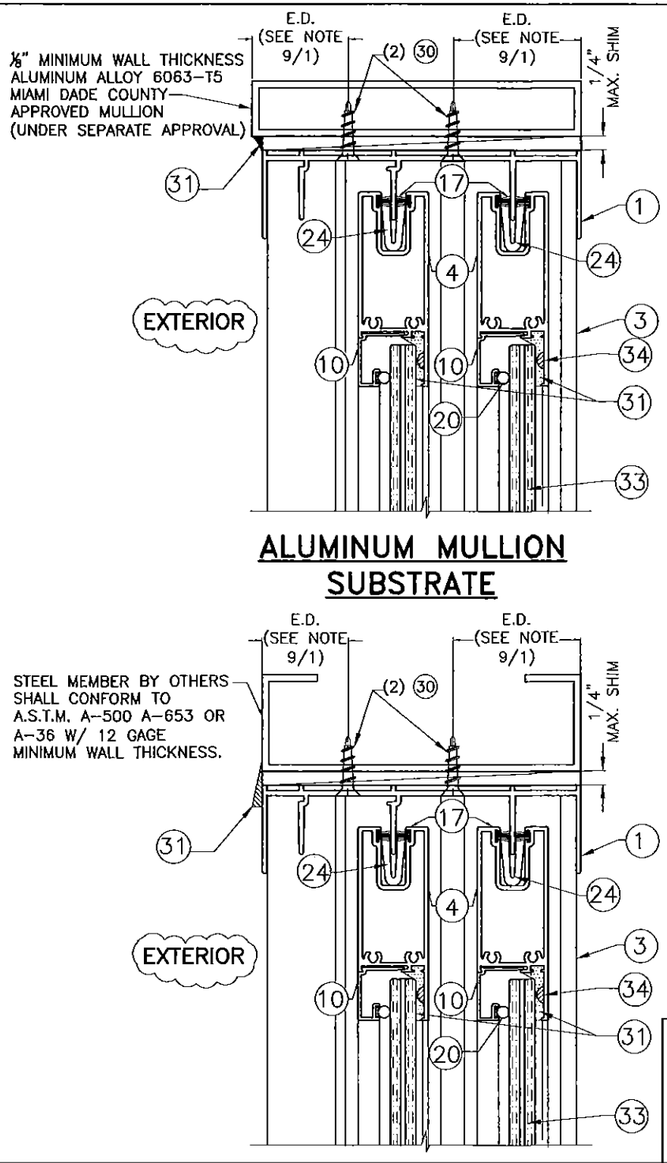

ALUMINUM MULLION SUBSTRATE

STEEL MEMBER SUBSTRATE

NOTES:

1. FOR MAXIMUM FRAME & D.L.O. SEE SCHEDULE ON SHEET 4 & FOR ANCHOR'S CONCENTRATION NEEDED AT STILES/ASTRAGAL SEE SCHEDULE ON SHEET 7A.
2. SUBSTRATES CAN BE COMBINED AS APPLICABLE.

* (2) 1/4" LONG WEEP NOTCHES, (1) AT EACH END OF EACH SCREEN RETAINER TRACK AT (2)

** (4) 11/16" LONG WEEP NOTCHES, (1) AT EACH END OF EACH OPERABLE PANEL TRACK AT (2)

SECTION B-B

SCALE: 3/8"=1"

PRODUCT REVISED
as complying with the Florida Building Code
Acceptance No 15-0622.15
Expiration Date Dec. 11, 2018
By Manuel Bera
Miami Dade Product Control

MIAMI DADE COUNTY

FLORIDA BUILDING CODE (High Velocity Hurricane Zone)

WALTER A. TILLIT JR. LICENSE No. 44167 STATE OF FLORIDA PROFESSIONAL ENGINEER
SIGNATURE & DATE

© 2015 TILTECO INC.

TILTECO INC.
TILLIT TESTING & ENGINEERING COMPANY
6355 N.W. 36th. St., Ste. 305, VIRGINIA GARDENS, Fl 33166
Phone : (305)871-1530 . Fax : (305)871-1531
e-mail: tilteco@aol.com
EB-0006719
WALTER A. TILLIT Jr., P.E.
FLORIDA Lic. 44167

SERIES 11000 HIGH IMPACT SLIDING GLASS DOOR

GENERAL IMPACT GLASS & WINDOWS
The Clear Solution
290 WEST 78 ROAD
HIALEAH, FL. 33014
PHONE: (305) 558-8103
FAX: (305) 558-6665
www.generalimpact.com

REV. NO	DESCRIPTION	DATE	REV. No	DESCRIPTION	DATE
1	OLD 12-003	06/04/15	3		
2			4		

DRAWN BY: F.R.L.

06/04/15 DATE

15-161 DRAWING No

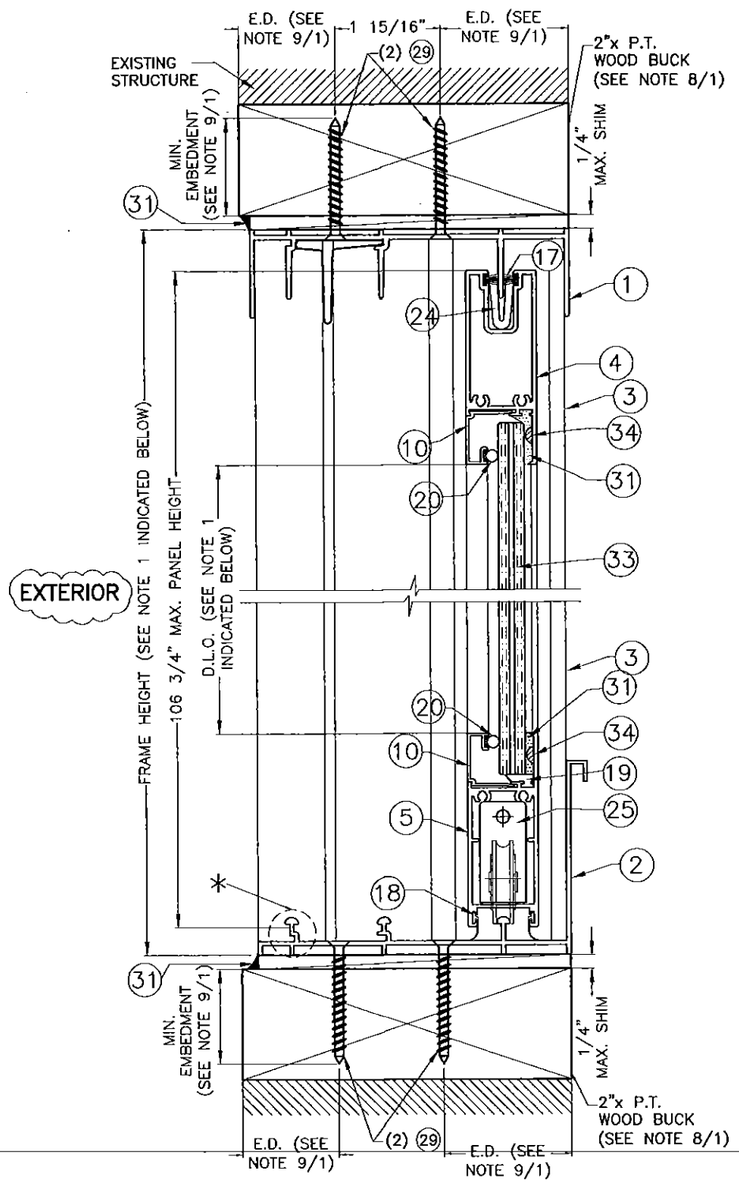

WOOD SUBSTRATE

* (2) 1/4" LONG WEEP NOTCHES, (1) AT EACH END OF EACH SCREEN RETAINER TRACK AT (2)

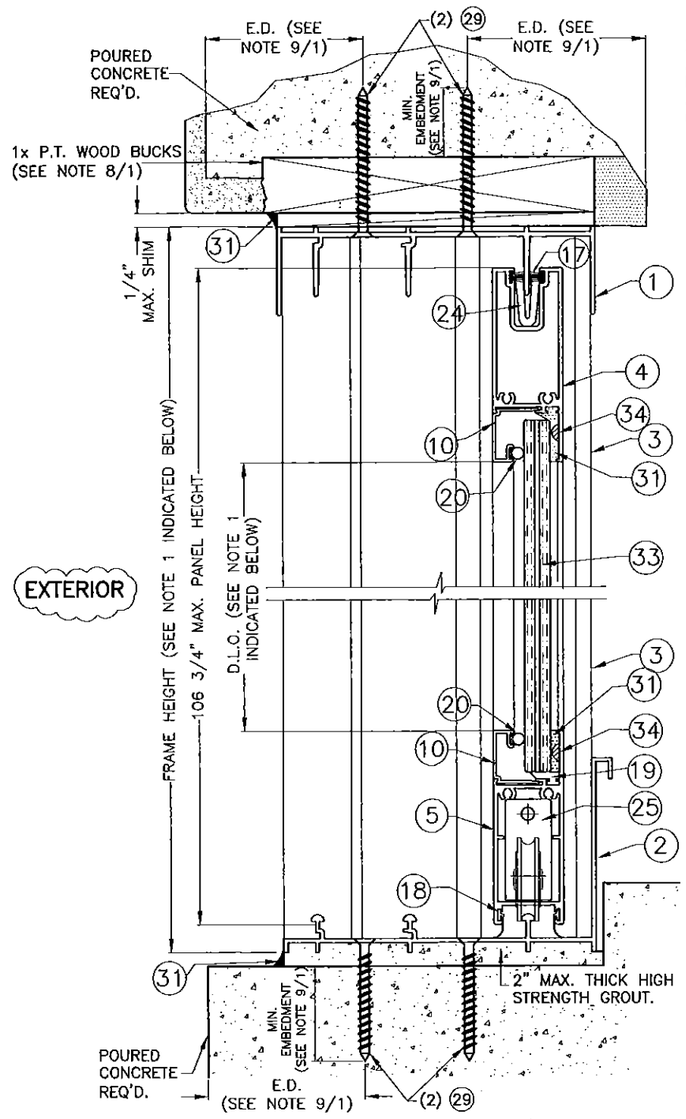

POURED CONCRETE/ CONCRETE BLOCK SUBSTRATE

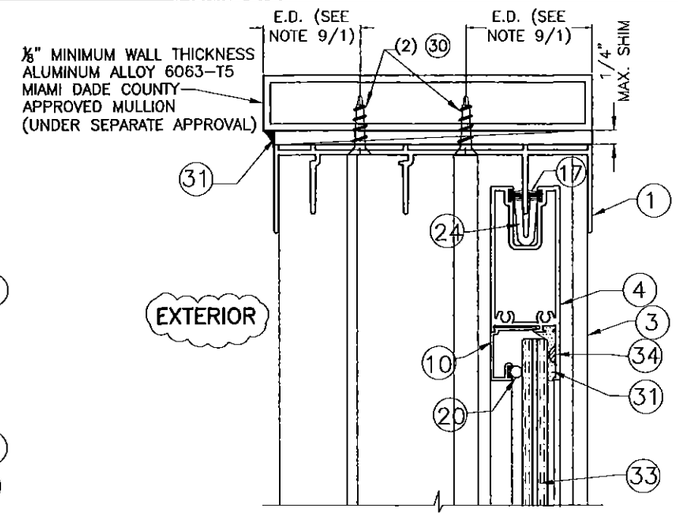

ALUMINUM MULLION SUBSTRATE

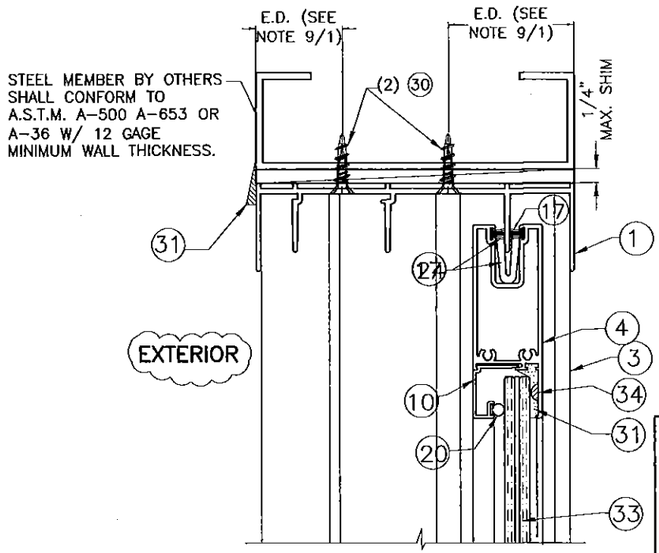

STEEL MEMBER SUBSTRATE

PRODUCT REVISED
as complying with the Florida Building Code
Acceptance No 15-0622.15
Expiration Date Dec. 11, 2018
By Manuel Perez
Miami-Dade Product Control

MIAMI DADE COUNTY

NOTES:

1. FOR MAXIMUM FRAME & D.L.O. SEE SCHEDULE ON SHEET 4 & FOR ANCHOR'S CONCENTRATION NEEDED AT STILES/ASTRAGAL SEE SCHEDULE ON SHEET 7A.
2. SUBSTRATES CAN BE COMBINED AS APPLICABLE.

SECTION B'-B'

SCALE: 3/8"=1"

WALTER A. TILLIT JR. LICENSE No. 44167 STATE OF FLORIDA PROFESSIONAL ENGINEER
P.E. SIGNATURE & DATE

FLORIDA BUILDING CODE (High Velocity Hurricane Zone)

© 2015 TILTECO INC.

TILTECO INC.
TILLIT TESTING & ENGINEERING COMPANY
6355 N.W. 36th. St., Ste. 305, VIRGINIA GARDENS, Fl 33166
Phone : (305)871-1530 . Fax : (305)871-1531
e-mail: tilteco@aol.com
EB-0006719
WALTER A. TILLIT Jr., P.E.
FLORIDA Lic. 44167

SERIES 11000 HIGH IMPACT SLIDING GLASS DOOR

GENERAL IMPACT GLASS & WINDOWS
The Clear Solution
290 WEST 78 ROAD
HIALEAH, FL. 33014
PHONE: (305) 558-8103
FAX: (305) 558-6665
www.generalimpact.com

REV. NO	DESCRIPTION	DATE	REV. No	DESCRIPTION	DATE
1	OLD 12-003	06/04/15	3		
2			4		

DRAWN BY: F.R.L.
06/04/15 DATE
15-161 DRAWING No
SHEET 10 OF 18

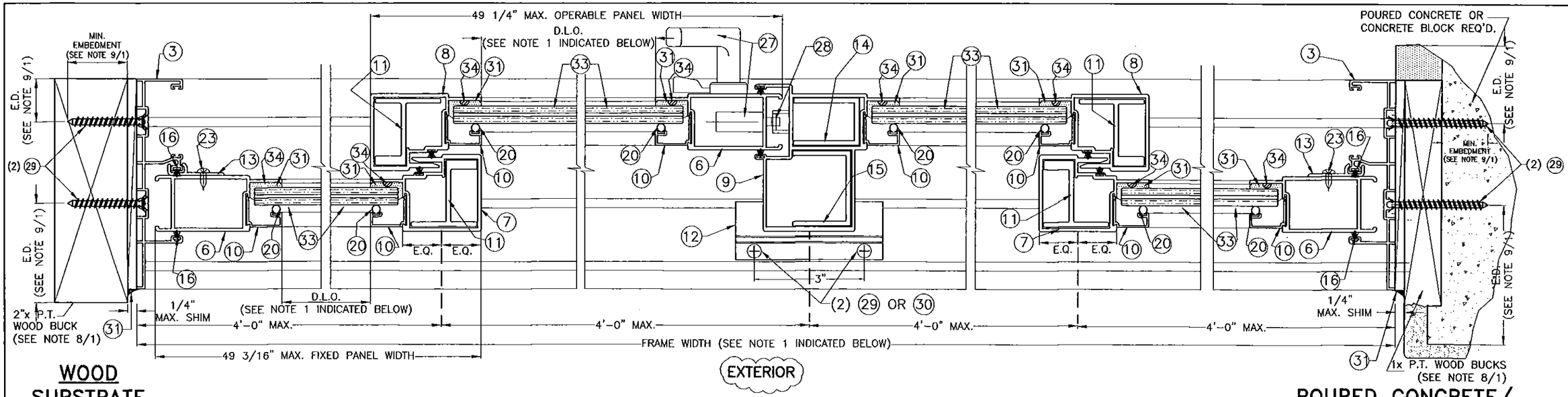

WOOD SUBSTRATE

SECTION C–C (OXXO)

SCALE: 3/8"=1"

POURED CONCRETE/ CONCRETE BLOCK SUBSTRATE

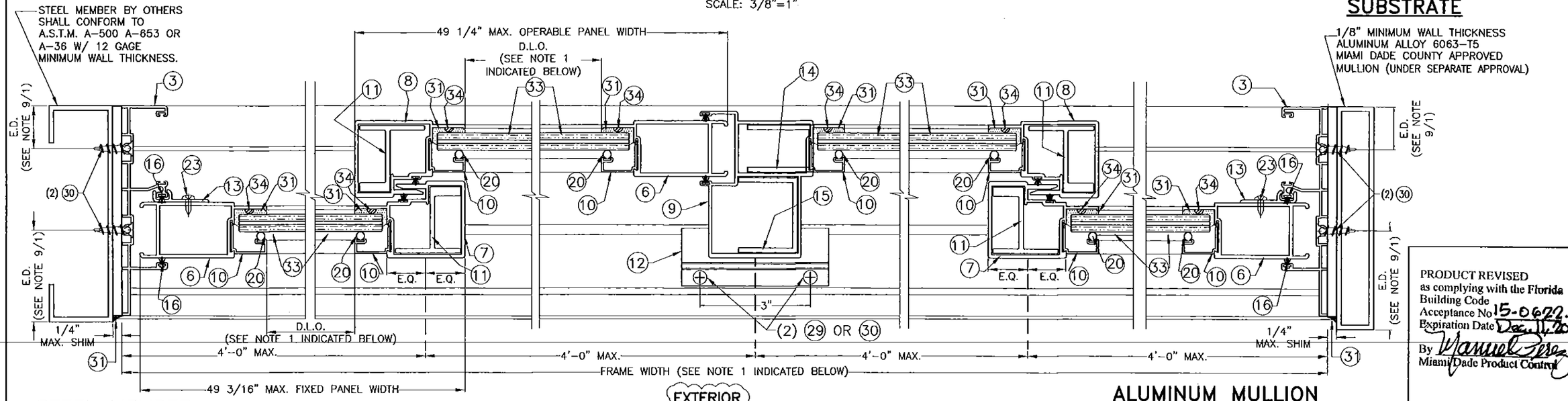

STEEL MEMBER SUBSTRATE

SECTION D–D (OXXO)

SCALE: 3/8"=1"

ALUMINUM MULLION SUBSTRATE

NOTES:

1. FOR MAXIMUM FRAME & D.L.O. SEE SCHEDULE ON SHEET 4 & FOR ANCHOR'S SPACING SEE SCHEDULE ON SHEET 7A.
2. SUBSTRATES CAN BE COMBINED AS APPLICABLE.

WALTER A. TILLIT JR. LICENSE No. 44167 STATE OF FLORIDA PROFESSIONAL ENGINEER

PRODUCT REVISED as complying with the Florida Building Code
Acceptance No 15-0622.15
Expiration Date Dec. 14 2018
By Manuel Perez
Miami Dade Product Control

MIAMI DADE COUNTY

FLORIDA BUILDING CODE (High Velocity Hurricane Zone)

© 2015 TILTECO INC.

TILTECO INC.
TILLIT TESTING & ENGINEERING COMPANY
8355 N.W. 36th. St., Ste. 305, VIRGINIA GARDENS, Fl 33166
Phone : (305)871-1530 . Fax : (305)871-1531
e-mail: tilteco@aol.com
EB-0006719
WALTER A. TILLIT Jr., P.E.
FLORIDA Lic. 44167

SERIES 11000 HIGH IMPACT SLIDING GLASS DOOR

GENERAL IMPACT GLASS & WINDOWS The Clear Solution

290 WEST 78 ROAD
HIALEAH, FL. 33014
PHONE: (305) 558-8103
FAX: (305) 558-6665
www.generalimpact.com

REV. NO	DESCRIPTION	DATE	REV. No	DESCRIPTION	DATE
1	OLD 12-903	08/04/15	3		
2			4		

DRAWN BY: F.R.L.

06/04/15 DATE

15-161 DRAWING No

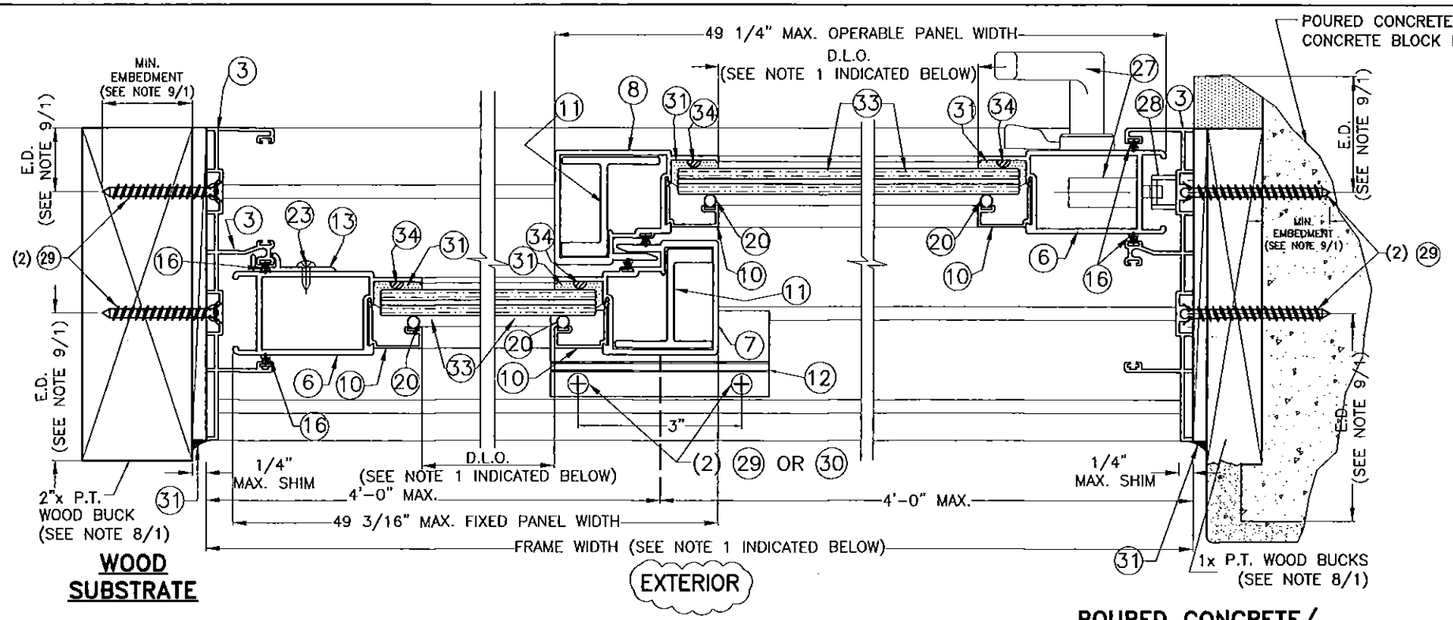

WOOD SUBSTRATE

POURED CONCRETE/ CONCRETE BLOCK SUBSTRATE

SECTION C–C (OX)

SCALE: 3/8"=1"

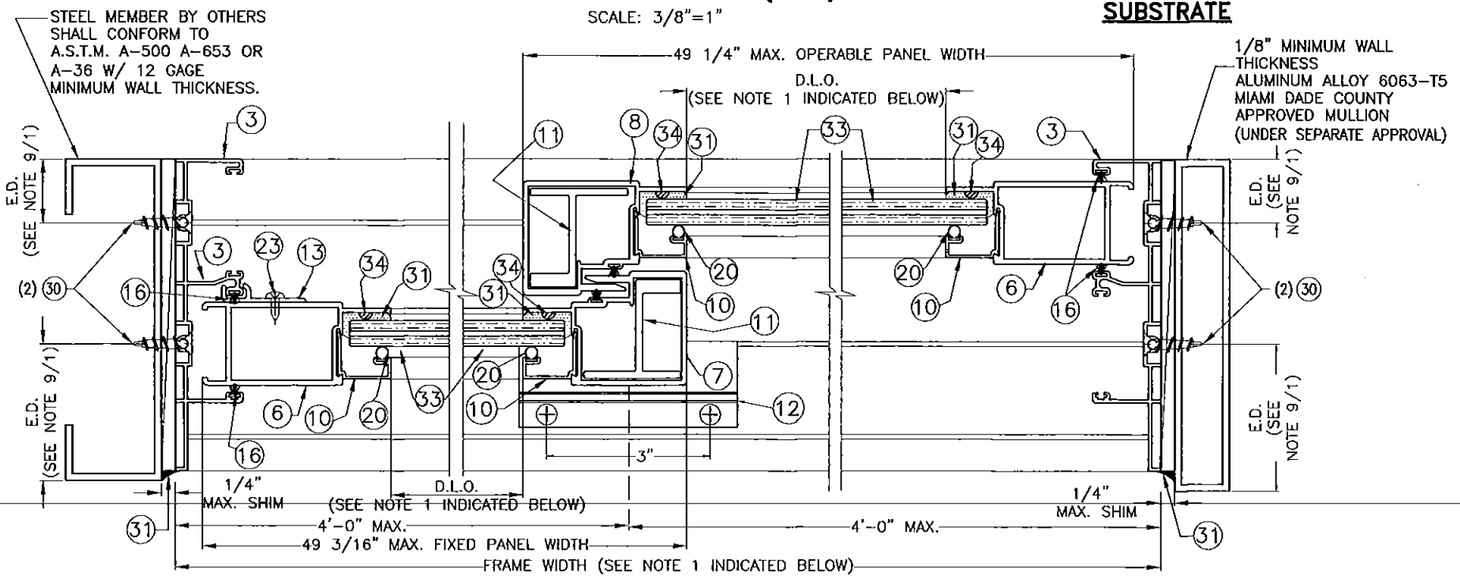

STEEL MEMBER SUBSTRATE

ALUMINUM MULLION SUBSTRATE

SECTION D–D (OX)

SCALE: 3/8"=1"

NOTES:

1. FOR MAXIMUM FRAME & D.L.O. SEE SCHEDULE ON SHEET 4 & FOR ANCHOR'S SPACING SEE SCHEDULE ON SHEET 7A.
2. SUBSTRATES CAN BE COMBINED AS APPLICABLE.

WALTER A. TILLIT JR. LICENSE No. 44167 STATE OF FLORIDA PROFESSIONAL ENGINEER
P.E. SEAL/ SIGNATURE /DATE

PRODUCT REVISED
as complying with the Florida Building Code
Acceptance No 15-0622.15
Expiration Date Dec 11 2018
By Manuel Perez
Miami Dade Product Control

MIAMI DADE COUNTY

FLORIDA BUILDING CODE (High Velocity Hurricane Zone)

©2015 TILTECO INC.

TILTECO INC.
TILLIT TESTING & ENGINEERING COMPANY
6355 N.W. 36th. St., Ste 305, VIRGINIA GARDENS, Fl 33166
Phone : (305)871-1530 . Fax : (305)871-1531
e-mail: tilteco@aol.com
EB-0006719
WALTER A. TILLIT Jr., P.E.
FLORIDA Lic. 44167

SERIES 11000 HIGH IMPACT SLIDING GLASS DOOR

GENERAL IMPACT GLASS & WINDOWS
The Clear Solution
290 WEST 78 ROAD
HIALEAH, FL. 33014
PHONE: (305) 558-8103
FAX: (305) 558-6665
www.generalimpact.com

REV. NO	DESCRIPTION	DATE	REV. No	DESCRIPTION	DATE
1	OLD 12-003	06/04/15	3		
2			4		

DRAWN BY: F.R.L.

06/04/15 DATE

15-161 DRAWING No

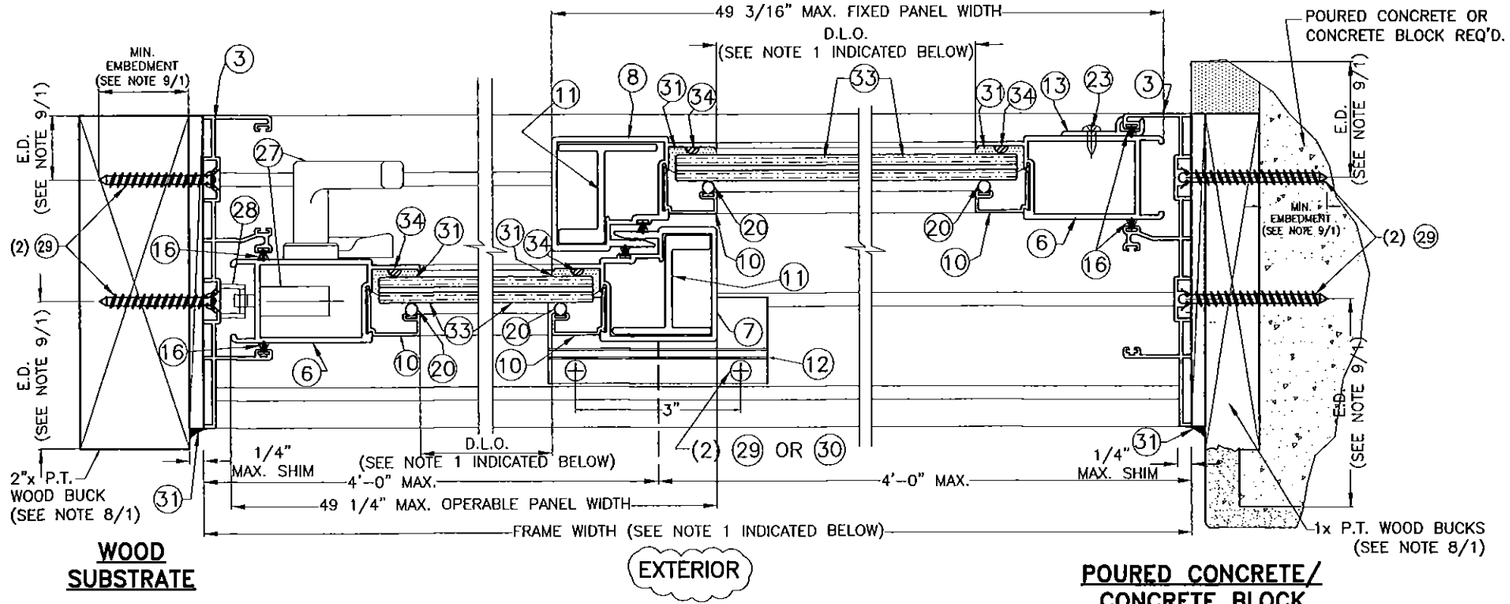

WOOD SUBSTRATE

EXTERIOR

POURED CONCRETE/ CONCRETE BLOCK SUBSTRATE

SECTION C–C (XO)

SCALE: 3/8"=1"

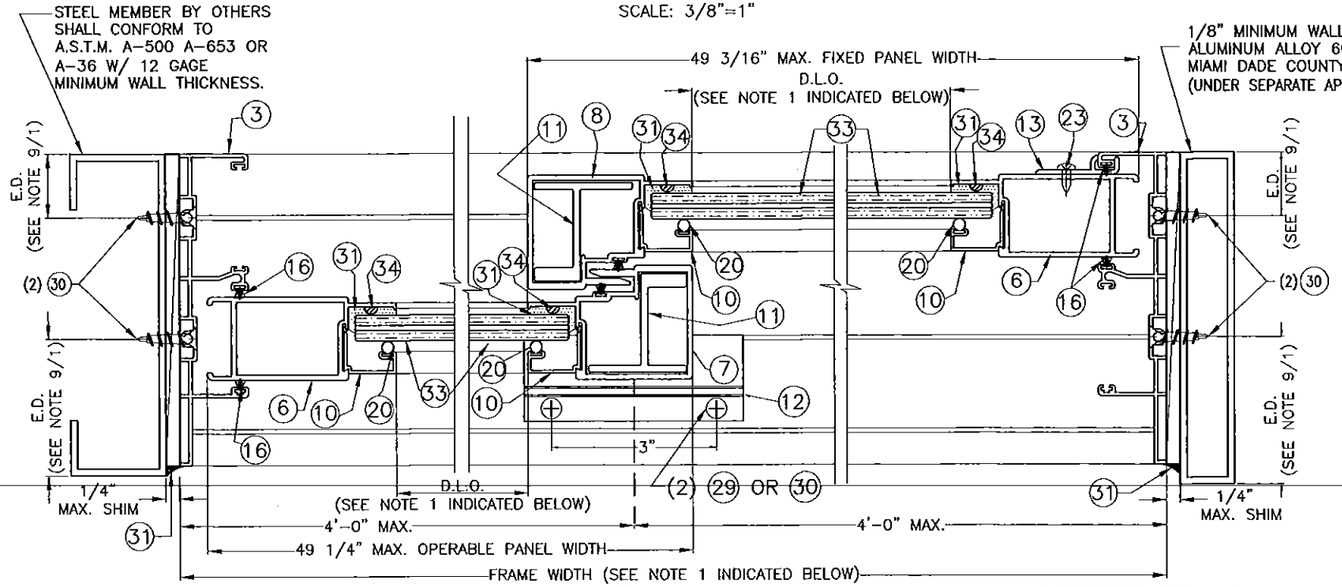

STEEL MEMBER SUBSTRATE

EXTERIOR

ALUMINUM MULLION SUBSTRATE

SECTION D–D (XO)

SCALE: 3/8"=1"

NOTES:

1. FOR MAXIMUM FRAME & D.L.O. SEE SCHEDULE ON SHEET 4 & FOR ANCHOR'S SPACING SEE SCHEDULE ON SHEET 7A.
2. SUBSTRATES CAN BE COMBINED AS APPLICABLE.

WALTER A. TILLIT JR. LICENSE NO. 44167 STATE OF FLORIDA PROFESSIONAL ENGINEER
P.E. SEAL SIGNATURE & DATE

PRODUCT REVISED
as complying with the Florida Building Code
Acceptance No 15.0622.15
Expiration Date Dec. 11, 2018
By Manuel Perez
Miami Dade Product Control

MIAMI DADE COUNTY

FLORIDA BUILDING CODE (High Velocity Hurricane Zone)

©2015 TILTECO INC.

TILTECO INC.
TILLIT TESTING & ENGINEERING COMPANY
6355 N.W. 36th. St., Ste. 305, VIRGINIA GARDENS, Fl 33166
Phone : (305)871-1530 . Fax : (305)871-1531
e-mail: tilteco@aol.com
EB-0006719
WALTER A. TILLIT Jr., P.E.
FLORIDA Lic. 44167

SERIES 11000 HIGH IMPACT SLIDING GLASS DOOR

GENERAL IMPACT GLASS & WINDOWS
The Clear Solution

290 WEST 78 ROAD
HIALEAH, FL. 33014
PHONE: (305) 558-8103
FAX: (305) 558-6665
www.generalimpact.com

REV. NO	DESCRIPTION	DATE	REV. No	DESCRIPTION	DATE
1	OLD 12-003	06/04/15	3		
2			4		

DRAWN BY: F.R.L.

06/04/15 DATE

15-161 DRAWING No

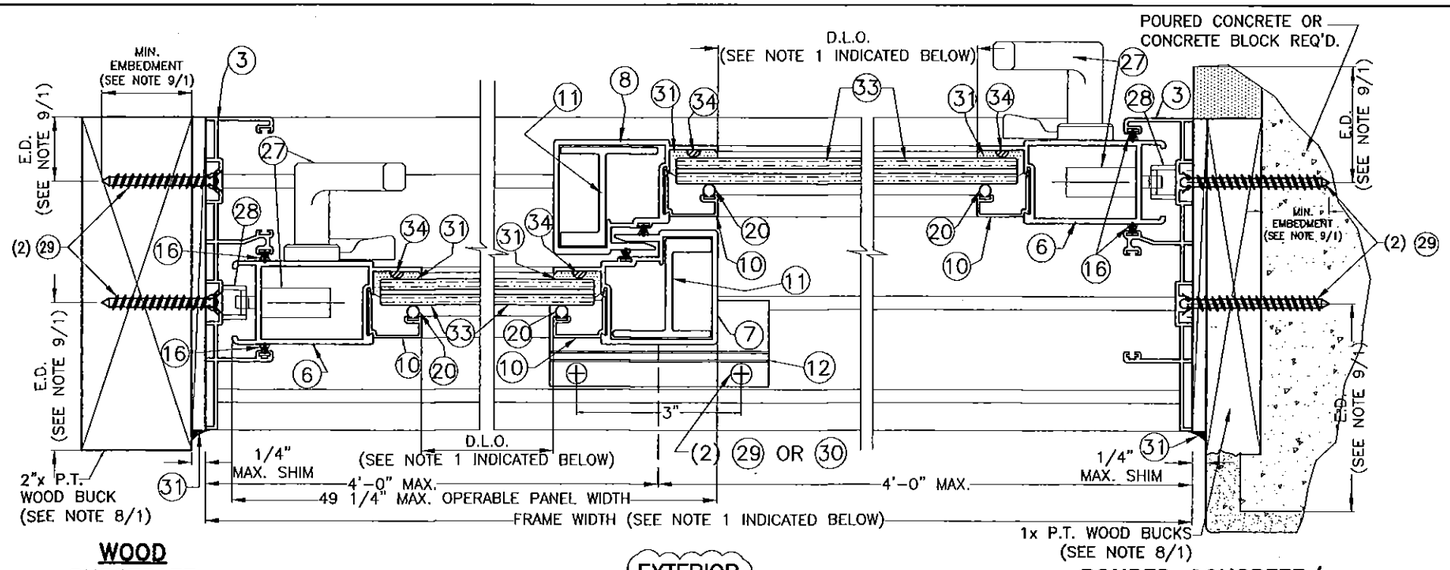

WOOD SUBSTRATE

POURED CONCRETE/ CONCRETE BLOCK SUBSTRATE

EXTERIOR

SECTION C–C (XX)

SCALE: 3/8"=1"

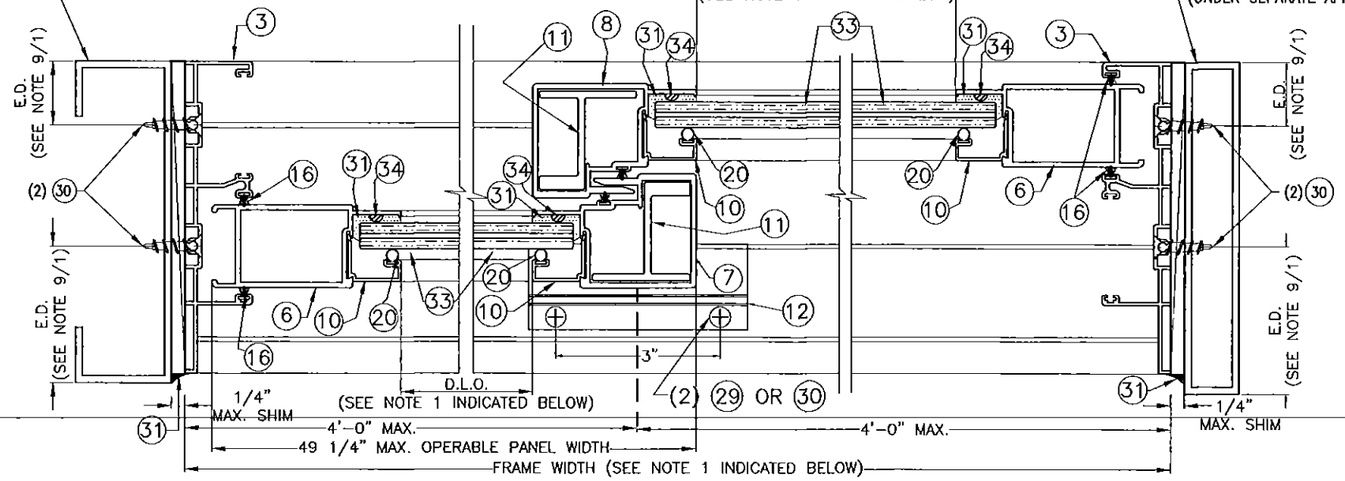

STEEL MEMBER SUBSTRATE

ALUMINUM MULLION SUBSTRATE

EXTERIOR

SECTION D–D (XX)

SCALE: 3/8"=1"

NOTES:

1. FOR MAXIMUM FRAME & D.L.O. SEE SCHEDULE ON SHEET 4 & FOR ANCHOR'S SPACING SEE SCHEDULE ON SHEET 7A.
2. SUBSTRATES CAN BE COMBINED AS APPLICABLE.

WALTER A. TILLIT JR. LICENSE No. 44167 STATE OF FLORIDA PROFESSIONAL ENGINEER
SIGNATURE/DATE

PRODUCT REVISED
as complying with the Florida Building Code
Acceptance No 15-0622.15
Expiration Date Dec. 11, 2018
By Manuel Perez
Miami-Dade Product Control

MIAMI DADE COUNTY

FLORIDA BUILDING CODE (High Velocity Hurricane Zone)

©2015 TILTECO INC.

TILTECO INC.
TILLIT TESTING & ENGINEERING COMPANY
6355 N.W. 36th. St., Ste 305, VIRGINIA GARDENS, Fl 33166
Phone : (305)871-1530 . Fax : (305)871-1531
e-mail: tilteco@aol.com
EB-0006719
WALTER A. TILLIT Jr., P.E.
FLORIDA Lic. 44167

SERIES 11000 HIGH IMPACT SLIDING GLASS DOOR

GENERAL IMPACT GLASS & WINDOWS
The Clear Solution
290 WEST 78 ROAD
HIALEAH, FL. 33014
PHONE: (305) 558-8103
FAX: (305) 558-6665
www.generalimpact.com

REV. NO	DESCRIPTION	DATE	REV. No	DESCRIPTION	DATE
1	OLD 12-003	06/04/15	3		
2			4		

DRAWN BY: F.R.L.

06/04/15 DATE

15-161 DRAWING No

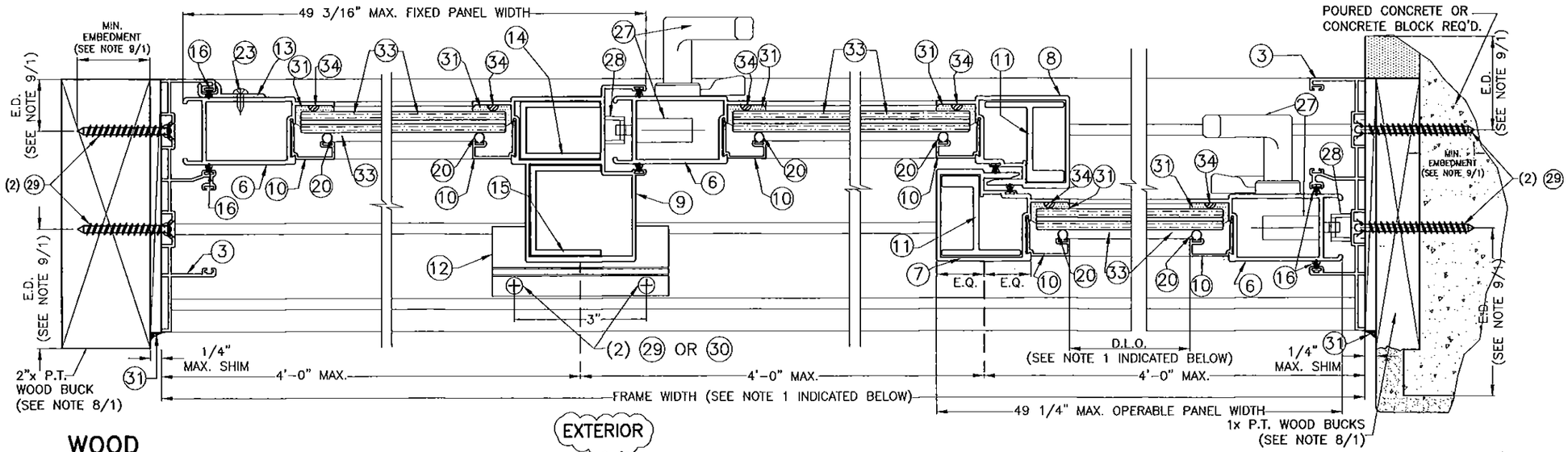

WOOD SUBSTRATE

SECTION C–C (OXX)

SCALE: 3/8"=1"

POURED CONCRETE/ CONCRETE BLOCK SUBSTRATE

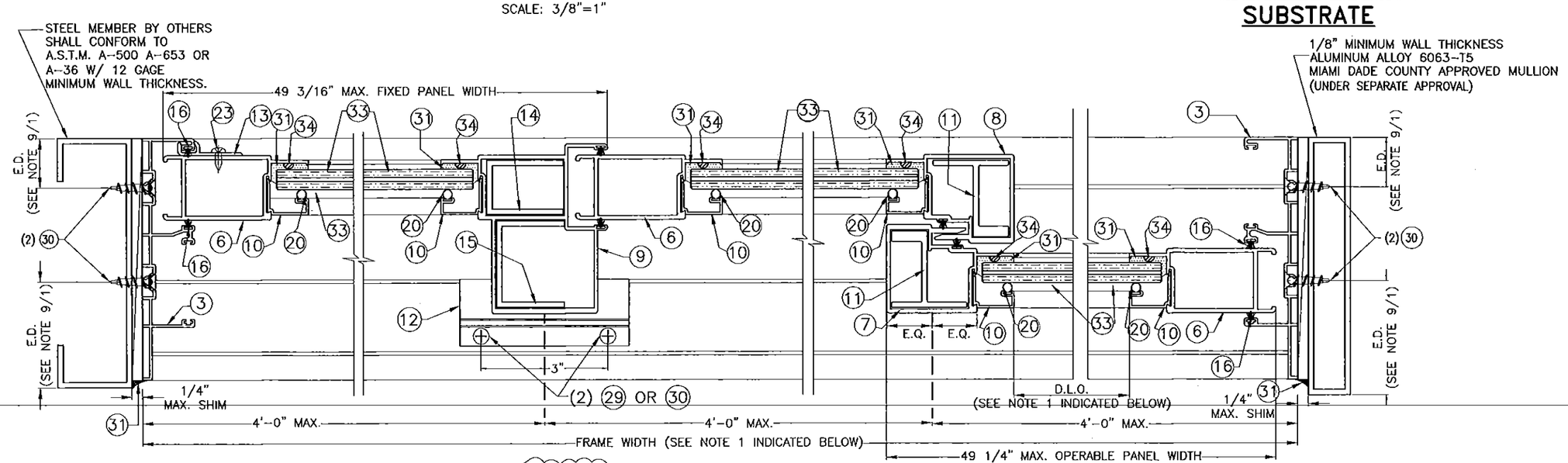

STEEL MEMBER SUBSTRATE

SECTION D–D (OXX)

SCALE: 3/8"=1"

ALUMINUM MULLION SUBSTRATE

NOTES:

1. FOR MAXIMUM FRAME & D.L.O. SEE SCHEDULE ON SHEET 4 & FOR ANCHOR'S SPACING SEE SCHEDULE ON SHEET 7A.
2. SUBSTRATES CAN BE COMBINED AS APPLICABLE.

WALTER A. TILLIT JR. LICENSE No. 44167 STATE OF FLORIDA PROFESSIONAL ENGINEER SEAL/SIGNATURE/DATE

PRODUCT REVISED
as complying with the Florida Building Code
Acceptance No 15-0622.15
Expiration Date Dec. 11, 2018
By Manuel Perez
Miami Dade Product Control

MIAMI DADE COUNTY

FLORIDA BUILDING CODE (High Velocity Hurricane Zone)

©2015 TILTECO INC.

TILTECO INC.
TILLIT TESTING & ENGINEERING COMPANY
6355 N.W. 36th. St., Ste. 305, VIRGINIA GARDENS, FL 33166
Phone : (305)871-1530 . Fax : (305)871-1531
e-mail: tilteco@aol.com
EB-0006719
WALTER A. TILLIT Jr., P.E.
FLORIDA Lic. 44167

SERIES 11000 HIGH IMPACT SLIDING GLASS DOOR

GENERAL IMPACT GLASS & WINDOWS The Clear Solution

290 WEST 78 ROAD
HIALEAH, FL. 33014
PHONE: (305) 558-8103
FAX: (305) 558-6665
www.generalimpact.com

REV. NO	DESCRIPTION	DATE	REV. No	DESCRIPTION	DATE
1	OLD 12-003	06/04/15	3		
2			4		

DRAWN BY: F.R.L.

06/04/15 DATE

15-161 DRAWING No

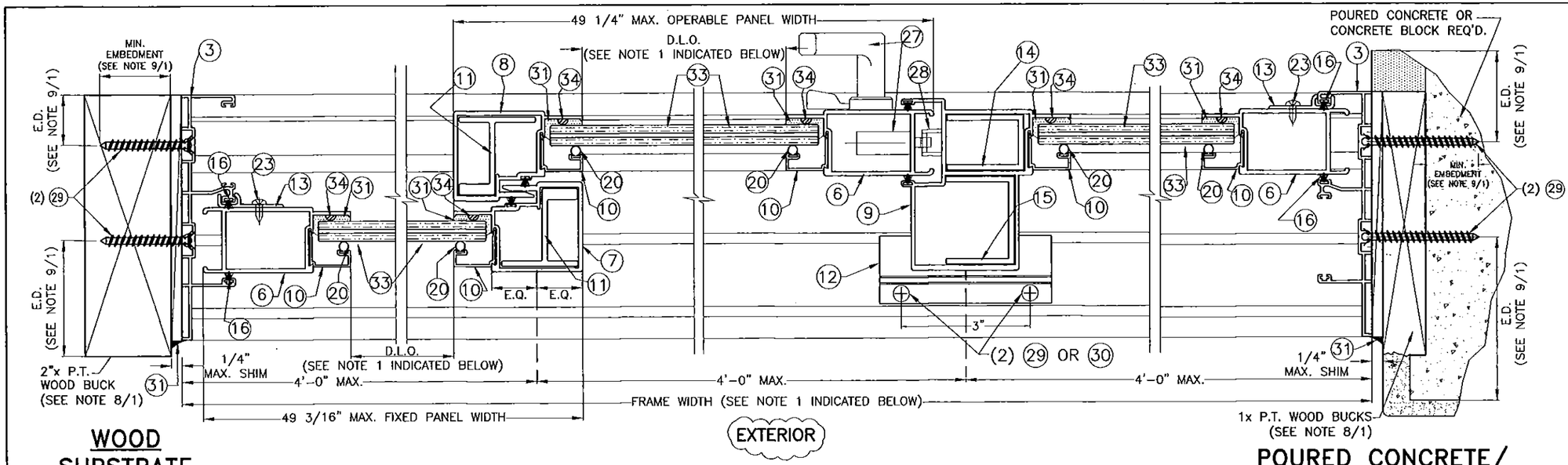

WOOD SUBSTRATE

SECTION C–C (OXO)

SCALE: 3/8"=1"

POURED CONCRETE/ CONCRETE BLOCK SUBSTRATE

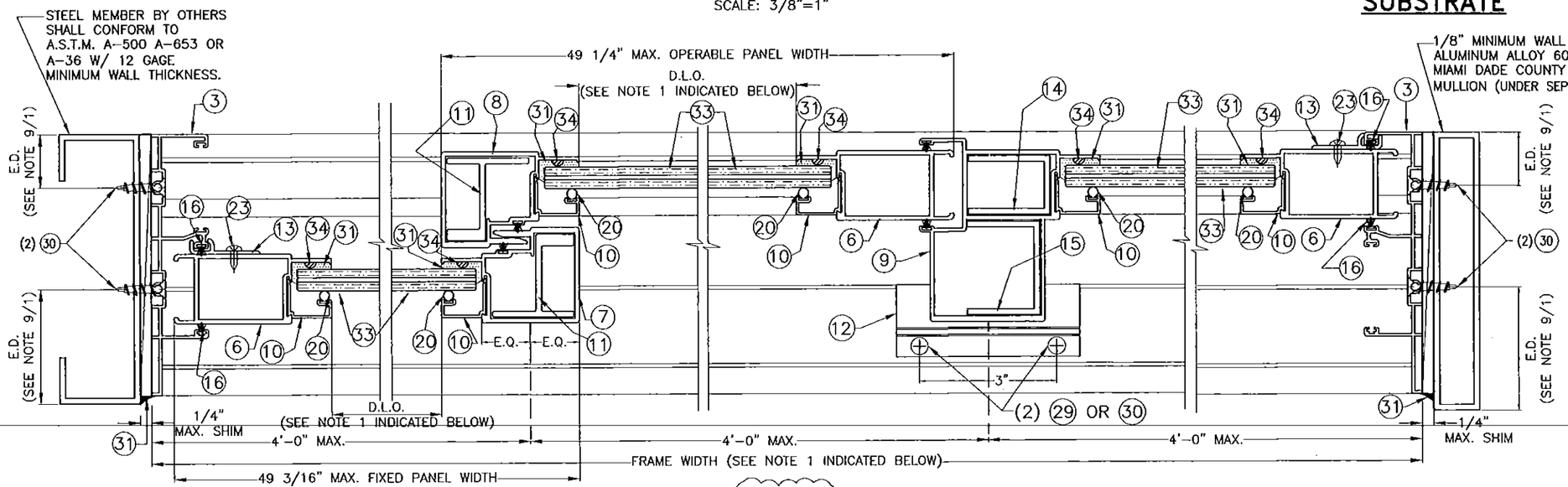

STEEL MEMBER SUBSTRATE

SECTION D–D (OXO)

SCALE: 3/8"=1"

ALUMINUM MULLION SUBSTRATE

NOTES:

1. FOR MAXIMUM FRAME & D.L.O. SEE SCHEDULE ON SHEET 4 & FOR ANCHOR'S SPACING SEE SCHEDULE ON SHEET 7A.
2. SUBSTRATES CAN BE COMBINED AS APPLICABLE.

WALTER A. TILLIT JR. LICENSE No. 44167 STATE OF FLORIDA PROFESSIONAL ENGINEER SIGNATURE DATE

PRODUCT REVISED
as complying with the Florida Building Code
Acceptance No 15-0622.15
Expiration Date Dec. 11, 2018
By Manuel Perez
Miami Dade Product Control

MIAMI DADE COUNTY

FLORIDA BUILDING CODE (High Velocity Hurricane Zone)

© 2015 TILTECO INC.

TILTECO INC.
TILLIT TESTING & ENGINEERING COMPANY
6355 N.W. 36th. St., Ste. 305, VIRGINIA GARDENS, Fl 33166
Phone : (305)871-1530 . Fax : (305)871-1531
e-mail: tilteco@aol.com
EB-0006719
WALTER A. TILLIT Jr., P.E.
FLORIDA Lic. 44167

SERIES 11000 HIGH IMPACT SLIDING GLASS DOOR

GENERAL IMPACT GLASS & WINDOWS
The Clear Solution
290 WEST 78 ROAD
HIALEAH, FL. 33014
PHONE: (305) 558-8103
FAX: (305) 558-6665
www.generalimpact.com

REV. NO	DESCRIPTION	DATE	REV. No	DESCRIPTION	DATE
1	OLD 12-003	06/04/15	3		
2			4		

DRAWN BY: F.R.L.

06/04/15 DATE

15-161 DRAWING No

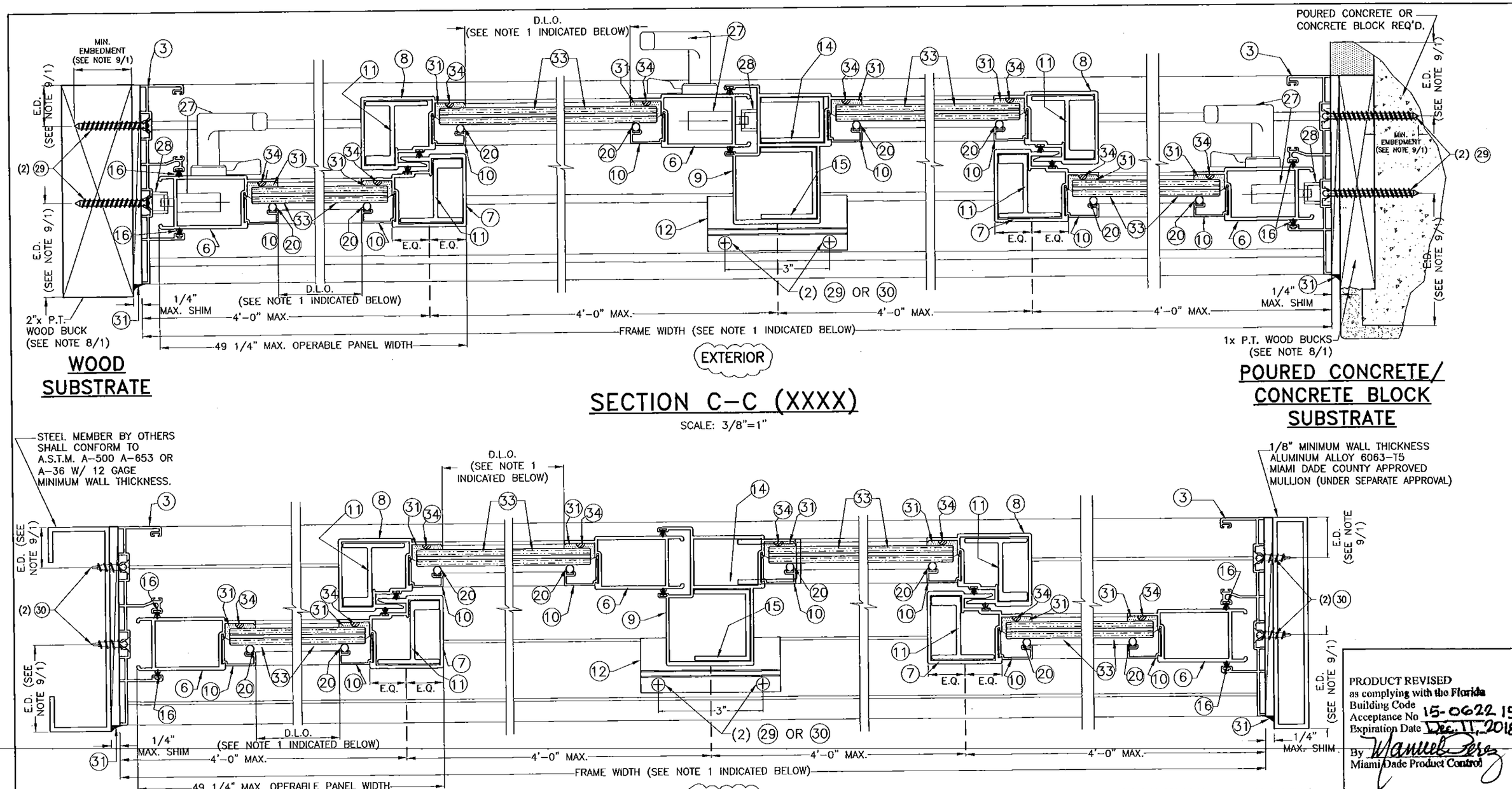

SECTION C–C (XXXX)

SCALE: 3/8"=1"

SECTION D–D (XXXX)

SCALE: 3/8"=1"

PRODUCT REVISED as complying with the Florida Building Code Acceptance No 15-0622.15 Expiration Date Dec. 11, 2018
By Manuel Perez
Miami Dade Product Control
MIAMI DADE COUNTY

FLORIDA BUILDING CODE (High Velocity Hurricane Zone)

NOTES:

1. FOR MAXIMUM FRAME & D.L.O. SEE SCHEDULE ON SHEET 4 & FOR ANCHOR'S SPACING SEE SCHEDULE ON SHEET 7A.
2. SUBSTRATES CAN BE COMBINED AS APPLICABLE.

WALTER A. TILLIT JR. LICENSE No. 44167 STATE OF FLORIDA PROFESSIONAL ENGINEER

P.E. SEAL/SIGNATURE/DATE

©2015 TILTECO INC.

TILTECO INC.
TILLIT TESTING & ENGINEERING COMPANY
6355 N.W. 36th. St., Ste. 305, VIRGINIA GARDENS, Fl 33166
Phone : (305)871-1530 . Fax : (305)871-1531
e-mail: tilteco@aol.com
EB-0006719
WALTER A. TILLIT Jr., P.E.
FLORIDA Lic. 44167

SERIES 11000 HIGH IMPACT SLIDING GLASS DOOR

GENERAL IMPACT GLASS & WINDOWS
The Clear Solution
290 WEST 78 ROAD
HIALEAH, FL. 33014
PHONE: (305) 558-8103
FAX: (305) 558-6665
www.generalimpact.com

REV. NO	DESCRIPTION	DATE	REV. No	DESCRIPTION	DATE
1	OLD 12-003	06/04/15	3		
2			4		

DRAWN BY: F.R.L.
06/04/15 DATE
15-161 DRAWING No
SHEET 17 OF 18

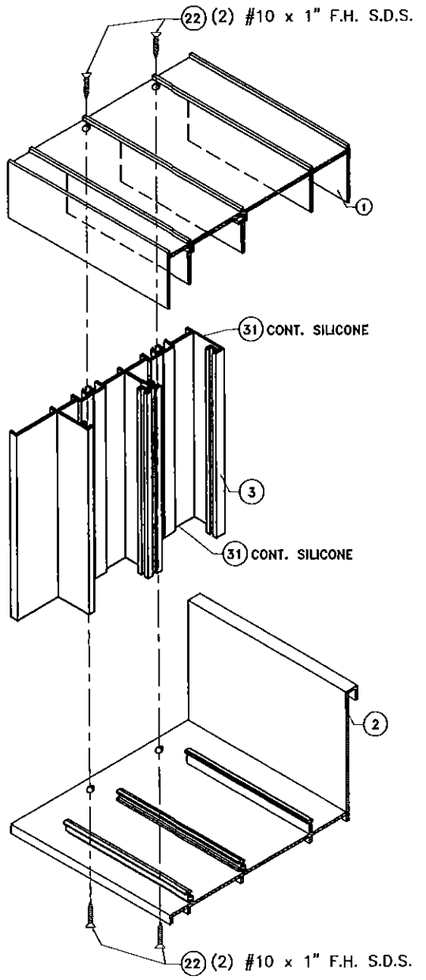

CORNER CONNECTION AT FRAME HEAD AND SILL
SCALE 1/4" = 1"

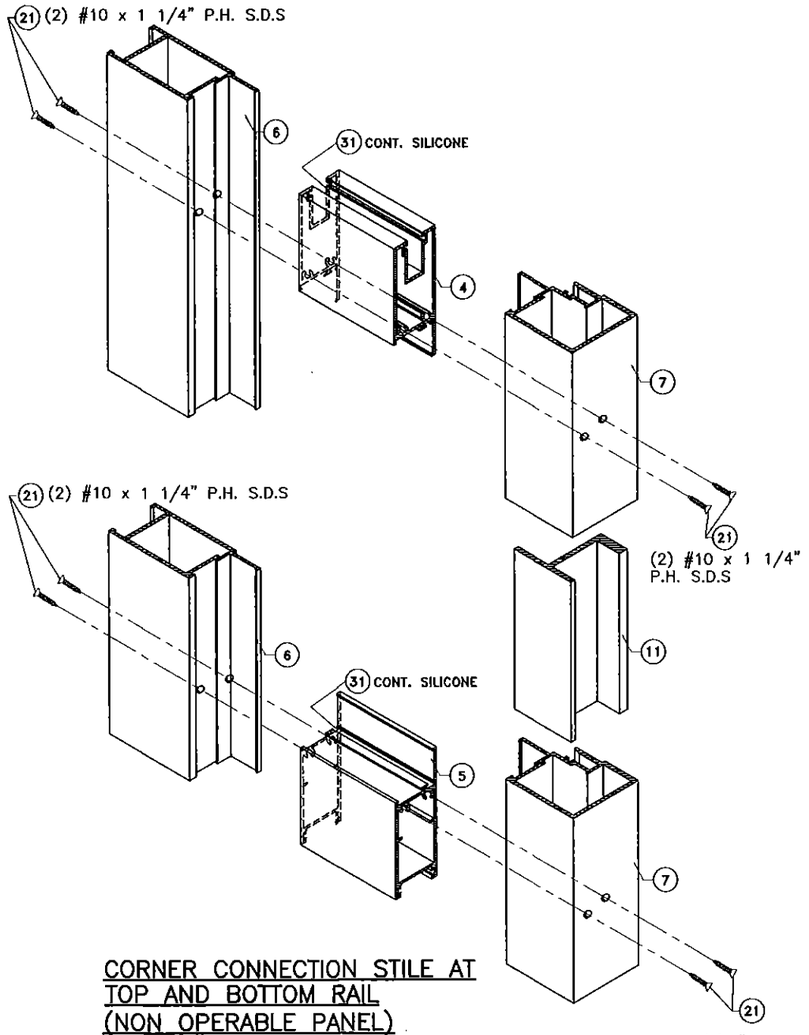

CORNER CONNECTION STILE AT TOP AND BOTTOM RAIL (NON OPERABLE PANEL)
SCALE 1/4" = 1"

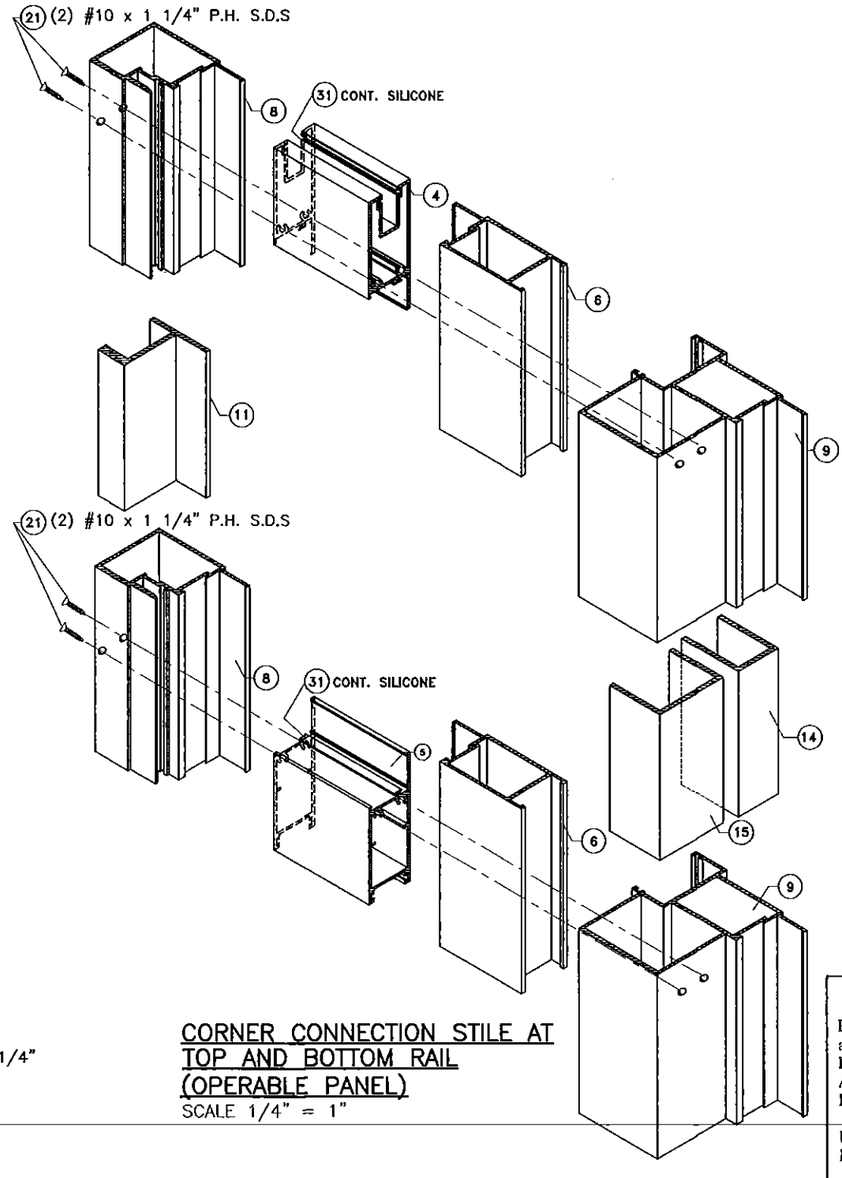

CORNER CONNECTION STILE AT TOP AND BOTTOM RAIL (OPERABLE PANEL)
SCALE 1/4" = 1"

PRODUCT REVISED
as complying with the Florida
Building Code
Acceptance No 15-0622.15
Expiration Date Dec. 11, 2018
By Manuel Perez
Miami Dade Product Control

MIAMI DADE COUNTY

FLORIDA BUILDING CODE (High Velocity Hurricane Zone)

WALTER A. TILLIT JR. LICENSE No. 44167 STATE OF FLORIDA PROFESSIONAL ENGINEER
P.E. SIGNATURE/DATE

© 2015 TILTECO INC.

TILTECO INC.
TILLIT TESTING & ENGINEERING COMPANY
6355 N.W. 36th. St., Ste. 305, VIRGINIA GARDENS, Fl 33166
Phone : (305)871-1530 . Fax : (305)871-1531
e-mail: tilteco@aol.com
EB-0006719
WALTER A. TILLIT Jr., P.E.
FLORIDA Lic. 44167

SERIES 11000 HIGH IMPACT SLIDING GLASS DOOR

GENERAL IMPACT GLASS & WINDOWS
The Clear Solution
290 WEST 78 ROAD
HIALEAH, FL. 33014
PHONE: (305) 558-8103
FAX: (305) 558-6665
www.generalimpact.com

REV. NO	DESCRIPTION	DATE	REV. No	DESCRIPTION	DATE
1	OLD 12-903	08/04/15	3		
2			4		

DRAWN BY: F.R.L.
06/04/15 DATE
15-161 DRAWING No
SHEET 18 OF 18