MIAMI-DADE COUNTY
PRODUCT CONTROL SECTION
11805 SW 26 Street, Room 208
Miami, Florida 33175-2474
T (786) 315-2590 F (786) 315-2599
www.miamidade.gov/economy

DEPARTMENT OF REGULATORY AND ECONOMIC RESOURCES (RER)
BOARD AND CODE ADMINISTRATION DIVISION

NOTICE OF ACCEPTANCE (NOA)

ACME Engineering and Manufacturing Corporation
1820 N. York Street
Muskogee, OK 74403

SCOPE: This NOA is being issued under the applicable rules and regulations governing the use of construction materials. The documentation submitted has been reviewed and accepted by Miami-Dade County RER-Product Control Section to be used in Miami Dade County and other areas where allowed by the Authority Having Jurisdiction (AHJ).

This NOA shall not be valid after the expiration date stated below. The Miami-Dade County Product Control Section (In Miami Dade County) and/or the AHJ (in areas other than Miami Dade County) reserve the right to have this product or material tested for quality assurance purposes. If this product or material fails to perform in the accepted manner, the manufacturer will incur the expense of such testing and the AHJ may immediately revoke, modify, or suspend the use of such product or material within their jurisdiction. RER reserves the right to revoke this acceptance, if it is determined by Miami-Dade County Product Control Section that this product or material fails to meet the requirements of the applicable building code. This product is approved as described herein, and has been designed to comply with the Florida Building Code, including the High Velocity Hurricane Zone.

DESCRIPTION: Series PDU & PNU Aluminum Rooftop Exhaust Fans

APPROVAL DOCUMENT: Drawing No. **686759**, titled "PDU-PNU Hurricane Fans", sheets 1 through 5 of 5, dated 05/19/2010, with revision D dated 05/28/2015, prepared by ACME Engineering & Manufacturing Corp., signed and sealed by Richard Boyette, P.E., bearing the Miami-Dade County Product Control revision stamp with the Notice of Acceptance number and expiration date by the Miami-Dade County Product Control Section.

MISSILE IMPACT RATING: Large and Small Missile Impact Resistant

LABELING: Each unit shall bear a permanent label with the manufacturer's name or logo, city, state, model/series, and following statement: "Miami-Dade County Product Control Approved", unless otherwise noted herein.

RENEWAL of this NOA shall be considered after a renewal application has been filed and there has been no change in the applicable building code negatively affecting the performance of this product.

TERMINATION of this NOA will occur after the expiration date or if there has been a revision or change in the materials, use, and/or manufacture of the product or process. Misuse of this NOA as an endorsement of any product, for sales, advertising or any other purposes shall automatically terminate this NOA. Failure to comply with any section of this NOA shall be cause for termination and removal of NOA.

ADVERTISEMENT: The NOA number preceded by the words Miami-Dade County, Florida, and followed by the expiration date may be displayed in advertising literature. If any portion of the NOA is displayed, then it shall be done in its entirety.

INSPECTION: A copy of this entire NOA shall be provided to the user by the manufacturer or its distributors and shall be available for inspection at the job site at the request of the Building Official.

This NOA **revises NOA # 12-0718.08** and consists of this page 1 and evidence page E-1, as well as approval document mentioned above.

The submitted documentation was reviewed by **Carlos M. Utrera, P.E.**

MIAMI-DADE COUNTY APPROVED

08/31/2015

NOTICE OF ACCEPTANCE: EVIDENCE SUBMITTED

A. DRAWINGS

1. Drawing No. **686759**, titled "PDU-PNU Hurricane Fans" sheets 1 through 5 of 5, dated 05/19/2010, with revision D dated 05/28/2015, prepared by ACME Engineering & Manufacturing Corp., signed and sealed by Richard Boyette, P.E.

B. TESTS *"Submitted under NOA # 10-0727.03"*

1. Test report on 1) Uniform Static Air Pressure Test per FBC, TAS 202-94
   2) Large Missile Impact Test per FBC, TAS 201-94,
   3) Cyclic Wind Pressure Test per FBC, TAS 203-94,
   along with marked-up drawings and installation diagram of three Series/Model PNU-300 Aluminum Roof Mounted Exhaust Fans, prepared by Architectural Testing, Inc., Test Report No. **90348.02-801-18**, dated 04/12/2010, with Revision 1 dated 11/22/2010, signed and sealed by Joseph A. Reed, P.E.

C. CALCULATIONS

1. Anchor verification calculations prepared by Rick Boyette Consulting, Inc, dated 05/28/2015, signed and sealed by Richard Boyette, P.E.

   "Submitted under NOA # 10-0727.03"

2. Anchor verification calculations, prepared by Rick Boyette Consulting, Inc, dated 11/15/2010, signed and sealed by Richard Boyette, P.E.

D. QUALITY ASSURANCE

1. Miami-Dade Department of Regulatory and Economic Resources (RER)

E. MATERIAL CERTIFICATIONS

1. None.

F. STATEMENTS

1. Statement letter of code conformance to the 5th edition (2014) FBC issued by Rick Boyette Consulting, Inc, dated 05/28/2015, signed and sealed by Richard Boyette, P.E.
2. No financial interest letter issued by Rick Boyette Consulting, Inc, dated 06/29/2015, signed and sealed by Richard Boyette, P.E.

08/31/2015

Carlos M. Utrera, P.E.
Product Control Examiner
NOA No. 15-0706.07
Expiration Date: January 13, 2016
Approval Date: September 10, 2015

Large Missile Impact Resistant
Max rated design pressure : +53.0 / −112.0 PSF

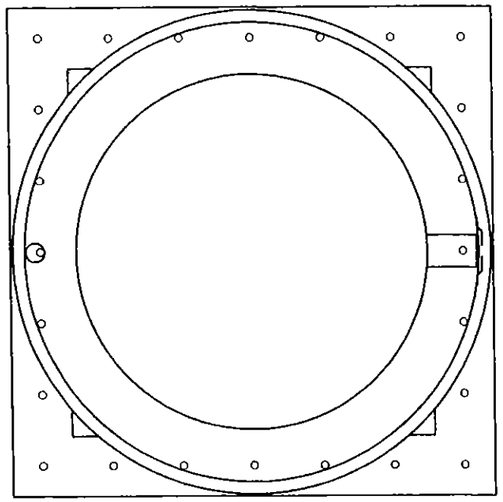

Plan View – Installation

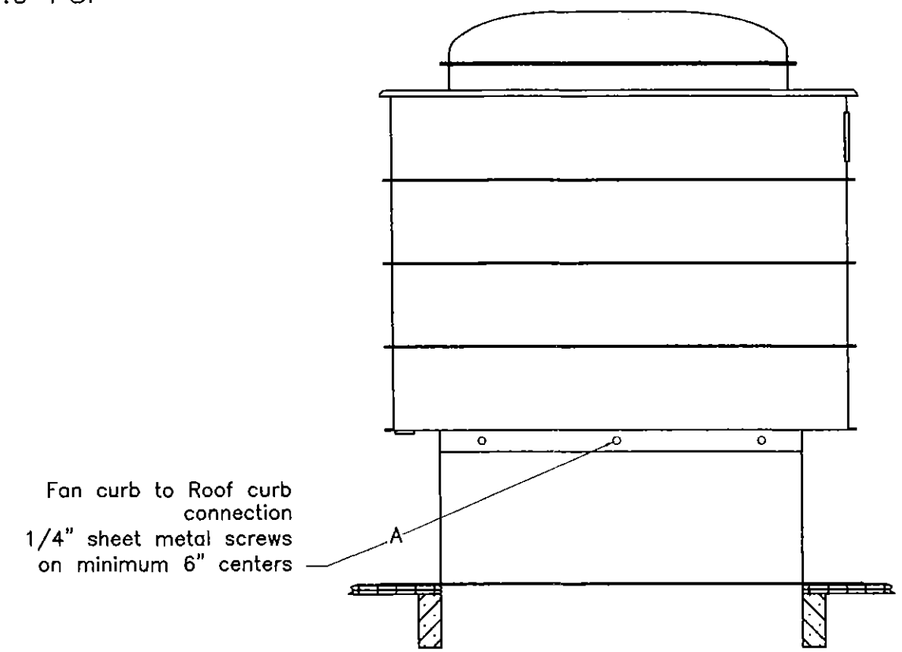

Elevation View – Installation

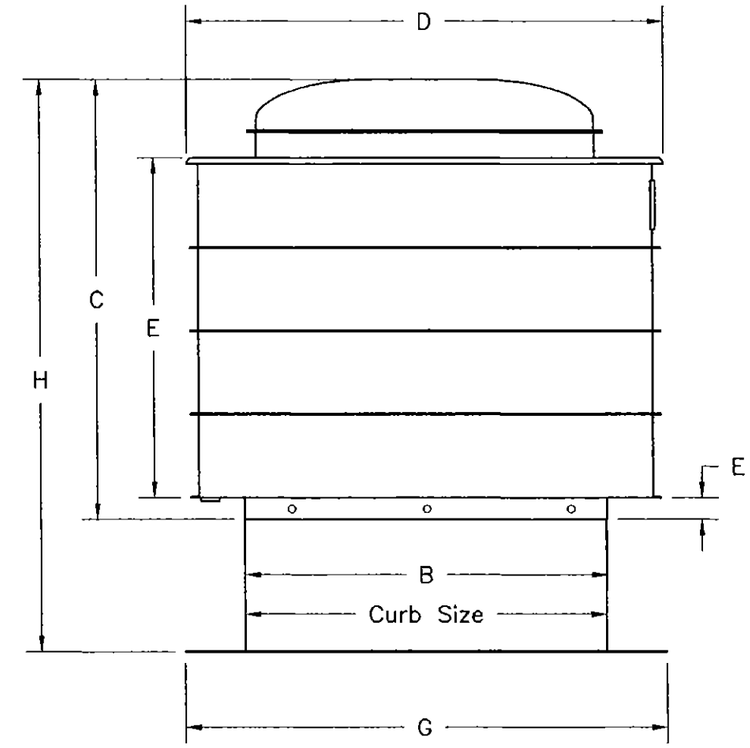

Dimensions (inches)

RICHARD BOYETTE
LICENSE
No 42485
STATE OF FLORIDA
PROFESSIONAL ENGINEER

APPROVED MAY 28 2015
PRODUCT REVISED
as complying with the Florida Building Code
Acceptance No 15-0706.07
Expiration Date 01/13/2016
By
Miami-Dade Product Control

Notes:
a. This rooftop exhaust fan has been designed to comply with the 2014 FBC SEC 1620.6 & ASCE 7-10 SEC 29.5.
b. Roof structure must be designed to withstand the weight and loading transmitted by this rooftop exhaust fan.
c. This approval is for the structural capacity of the exterior housing only, it does not include any interior mechanism and/or electrical part.
d. This rooftop exhaust fan has not been tested for wind driven rain according to Florida Building Code, TAS 100(A).
e. All fasteners must be corrosion resistant.

Richard Boyette, FL PE #42485
Rick Boyette Consulting Inc – CoA #9707
4031 Coconut Blvd
Royal Palm Beach FL 33411
561-790-5766

Ⓑ

Model				Fastener Count A	Fan Dimensions (inches) B	C	D	E	F	G	H	Curb Dimensions Curb Size	Curb Height	Curb Material	Fan + Curb Weight (lbs)
PDU080				8	13.50	13.06	20.63	12.84	2.00	21.50	32.41	13.20	8 to 18	18 ga. G90 galv.	23
PDU100				8	13.50	16.10	20.63	12.84	2.00	21.50	32.41	13.20	8 to 18	18 ga. G90 galv.	30
PDU110				8	13.50	16.41	20.63	12.84	2.00	21.50	32.41	13.20	8 to 18	18 ga. G90 galv.	30
PDU120				12	19.00	19.48	26.41	16.59	2.00	27.00	36.87	18.70	8 to 18	18 ga. G90 galv.	50
PDU135				12	19.00	20.87	26.41	16.59	2.00	27.00	36.87	18.70	8 to 18	18 ga. G90 galv.	50
PDU150	PDU165			12	24.00	23.89	30.16	21.92	2.00	32.00	39.89	23.70	8 to 18	18 ga. G90 galv.	76
PDU185	PDU200			16	28.00	25.75	34.65	21.99	2.00	36.00	41.75	27.70	8 to 18	18 ga. G90 galv.	94
PNU080	PNU100			12	24.00	26.35	33.66	22.13	2.00	32.00	43.37	23.70	8 to 18	18 ga. G90 galv.	101
PNU120	PNU135			12	24.00	27.37	33.66	22.13	2.00	32.00	43.37	23.70	8 to 18	18 ga. G90 galv.	101
PNU150	PNU155	PNU160	PNU165	16	28.00	26.92	38.00	24.14	2.00	36.00	41.92	27.70	8 to 18	18 ga. G90 galv.	139
PNU185	PNU200			16	28.00	31.56	39.75	28.73	2.00	36.00	47.56	27.70	8 to 18	18 ga. G90 galv.	187
PNU235	PNU240	PNU245		20	34.00	36.25	44.75	31.50	2.00	42.00	52.25	33.70	8 to 18	18 ga. G90 galv.	211
PNU290	PNU295	PNU300		24	40.00	42.50	55.29	34.25	2.00	48.00	58.50	39.70	8 to 18	18 ga. G90 galv.	402

DWG NO. 686759	Sheet 1/5
TITLE PDU-PNU HURRICANE FANS	
MAT'L	
DRAFTER TCR	DATE 05/19/10
DESIGN ENG. TCR 05/19/10	RELEASED
CHKD BY / MFG.	SCALE NTS

LET.	REVISION RECORD	BY	CKD.	DATE
B	UPDATED AND MERGED PNU NOMENCLATURE 4/8/11 BPF	BPF	TCR	4/8/11
C	REVISED FOR FLORIDA BUILDING CODE 2010	BPF	TCR	7/3/12
D	REVISED FOR 2014 FBC	TCR	TGB	5/28/15

Acme Engineering & Manufacturing Corp.
1820 N. York Street
Muskogee, OK 74403
918-682-7791

Item #	Qty.	Item / Size	80	100	110	120	135
1	1	Motor Enclosure Cover	.050" aluminum	.050" aluminum	.050" aluminum	.050" aluminum	.050" aluminum
2	1	Discharge Guard	.125" galv. wire	.125" galv. wire	.125" galv. wire	.125" galv. wire	.125" galv. wire
3	1	Motor					
4	1	Motor Enclosure	20 ga. G90 galv.	20 ga. G90 galv.	20 ga. G90 galv.	20 ga. G90 galv.	20 ga. G90 galv.
5	1	Breather Tube	.065" wall aluminum	.065" wall aluminum	.065" wall aluminum	.065" wall aluminum	.065" wall aluminum
6	1	Wiring Post					
7A	1	Upper Windband	.080" aluminum	.080" aluminum	.080" aluminum	.080" aluminum	.080" aluminum
7B	1	Middle Windband				.080" aluminum	.080" aluminum
7C	1	Middle Windband					
7D	1	Lower Windband	.080" aluminum	.080" aluminum	.080" aluminum	.080" aluminum	.080" aluminum
8	1	Breather Tube Cover					
9	1	Disconnect Switch					
10	3	Support Bracket	14 ga. G90 galv.	14 ga. G90 galv.	14 ga. G90 galv.	14 ga. G90 galv.	14 ga. G90 galv.
11	1	Motor Enclosure Base	16 ga. G90 galv.	16 ga. G90 galv.	16 ga. G90 galv.	16 ga. G90 galv.	16 ga. G90 galv.
12	1	Impeller					
13	△	1/4"-20 Nuts and Bolts	6 bolts per flange union	6 bolts per flange union	6 bolts per flange union	6 bolts per flange union	6 bolts per flange union
14	△	1/4"-20 Nuts and Bolts	4 bolts per flange union	4 bolts per flange union	4 bolts per flange union	4 bolts per flange union	4 bolts per flange union

Item #	Qty.	Item / Size	150	165	185	200
1	1	Motor Enclosure Cover	.050" aluminum	.050" aluminum	.050" aluminum	.050" aluminum
2	1	Discharge Guard	.125" galv. wire	.125" galv. wire	.125" galv. wire	.125" galv. wire
3	1	Motor				
4	1	Motor Enclosure	20 ga. G90 galv.	20 ga. G90 galv.	20 ga. G90 galv.	20 ga. G90 galv.
5	1	Breather Tube	.065" wall aluminum	.065" wall aluminum	.065" wall aluminum	.065" wall aluminum
6	1	Wiring Post				
7A	1	Upper Windband	.080" aluminum	.080" aluminum	.080" aluminum	.080" aluminum
7B	1	Middle Windband	.080" aluminum	.080" aluminum	.080" aluminum	.080" aluminum
7C	1	Middle Windband				
7D	1	Lower Windband	.080" aluminum	.080" aluminum	.080" aluminum	.080" aluminum
8	1	Breather Tube Cover	.063" aluminum	.063" aluminum	.063" aluminum	.063" aluminum
9	1	Disconnect Switch				
10	3	Support Bracket	14 ga. G90 galv.	14 ga. G90 galv.	14 ga. G90 galv.	14 ga. G90 galv.
11	1	Motor Enclosure Base	16 ga. G90 galv.	16 ga. G90 galv.	16 ga. G90 galv.	16 ga. G90 galv.
12	1	Impeller				
13	△	1/4"-20 Nuts and Bolts	7 bolts per flange union	7 bolts per flange union	7 bolts per flange union	7 bolts per flange union
14	△	1/4"-20 Nuts and Bolts	5 bolts per flange union	5 bolts per flange union	5 bolts per flange union	5 bolts per flange union

* Steel material gages shown are nominal. Aluminum thicknesses shown are nominal. Actual thicknesses will vary in accordance with industry standard tolerances.

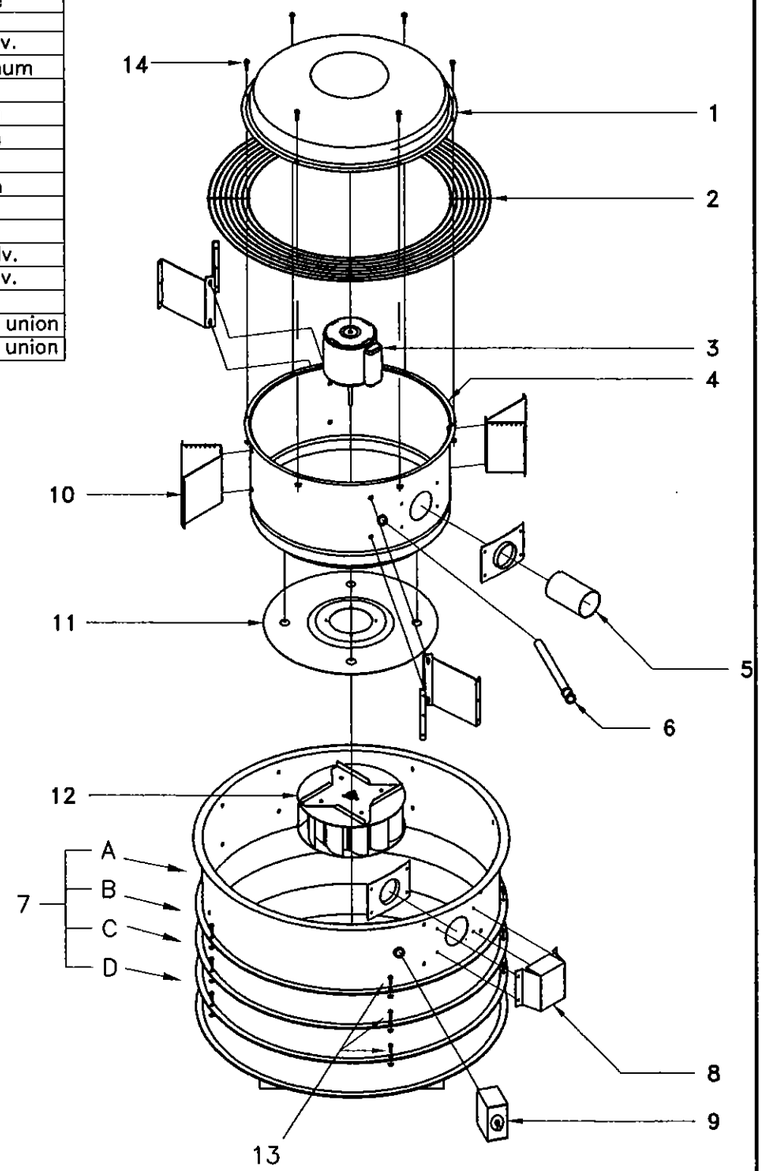

PRODUCT REVISED
as complying with the Florida Building Code
Acceptance No 15-0706.07
Expiration Date 01/13/2016
By
Miami Dade Product Control

APPROVED MAY 28 2015
Richard Boyette, FL PE #42485
Rick Boyette Consulting Inc – CoA #9707
4031 Coconut Blvd
Royal Palm Beach FL 33411
561-790-5766

RICHARD D. BOYETTE LICENSE No 42485 STATE OF FLORIDA PROFESSIONAL ENGINEER

PDU080 – PDU200 Fans

DWG NO. 686759 Sheet 2/5

TITLE PDU-PNU HURRICANE FANS

MAT'L

DRAFTER TCR DATE 05/19/10

DESIGN ENG. TCR 05/19/10 RELEASED

CHKD BY MFG. SCALE NTS

LET.	REVISION RECORD	BY	CKD.	DATE
A	REVISED FOR FLORIDA BUILDING CODE 2010	BPF	TCR	7/3/12
B	REVISED FOR 2014 FBC	TCR	TGB	5/28/15

Acme Engineering & Manufacturing Corp.
1820 N. York Street
Muskogee, OK 74403
918-682-7791

Item#	Qty.	Item / Size	80, 100	120	135	150
1	1	Motor Enclosure Cover	.050" aluminum	.050" aluminum	.050" aluminum	.050" aluminum
2	1	Discharge Guard	.125" galv. wire	.125" galv. wire	.125" galv. wire	.125" galv. wire
3	1	Drive Base	12 ga. G90 galv.	12 ga. G90 galv.	12 ga. G90 galv.	12 ga. G90 galv.
4	1	Drive Brace	14 ga. G90 galv.	14 ga. G90 galv.	14 ga. G90 galv.	14 ga. G90 galv.
5	1	Motor				
6	1	Shaft & Bearing Assembly				
7	1	Motor Enclosure	22 ga. G90 galv.	22 ga. G90 galv.	22 ga. G90 galv.	22 ga. G90 galv.
8	4	Support Bracket	14 ga. G90 galv.	14 ga. G90 galv.	14 ga. G90 galv.	14 ga. G90 galv.
9	2	Bearing Cap	14 ga. G90 galv.	14 ga. G90 galv.	14 ga. G90 galv.	14 ga. G90 galv.
10	1	Breather Tube	.065" wall aluminum	.065" wall aluminum	.065" wall aluminum	.065" wall aluminum
11	1	Wiring Post				
12	1	Impeller				
13 A	1	Upper Windband	.080" aluminum	.080" aluminum	.080" aluminum	.080" aluminum
13 B	1	Middle Windband	.080" aluminum	.080" aluminum	.080" aluminum	.080" aluminum
13 C	1	Middle Windband				.080" aluminum
13 D	1	Lower Windband	.080" aluminum	.080" aluminum	.080" aluminum	.080" aluminum
14	1	Breather Tube Cover	.063" aluminum	.063" aluminum	.063" aluminum	.063" aluminum
15	1	Disconnect Switch				
16	1	Base Bracket	12 ga. G90 galv.	12 ga. G90 galv.	12 ga. G90 galv.	12 ga. G90 galv.
17	△	1/4"– 20 Nuts and Bolts	7 bolts per flange union	7 bolts per flange union	7 bolts per flange union	7 bolts per flange union
18	△	1/4"– 20 Nuts and Bolts	5 bolts per flange union	5 bolts per flange union	5 bolts per flange union	5 bolts per flange union

Item#	Qty.	Item / Size	155, 160, 165	185	200
1	1	Motor Enclosure Cover	.050" aluminum	.050" aluminum	.050" aluminum
2	1	Discharge Guard	.125" galv. wire	.125" galv. wire	.125" galv. wire
3	1	Drive Base	12 ga. G90 galv.	12 ga. G90 galv.	12 ga. G90 galv.
4	1	Drive Brace	14 ga. G90 galv.	14 ga. G90 galv.	14 ga. G90 galv.
5	1	Motor			
6	1	Shaft & Bearing Assembly			
7	1	Motor Enclosure	22 ga. G90 galv.	20 ga. G90 galv.	20 ga. G90 galv.
8	4	Support Bracket	14 ga. G90 galv.	14 ga. G90 galv.	14 ga. G90 galv.
9	2	Bearing Cap	14 ga. G90 galv.	10 ga. G90 galv.	10 ga. G90 galv.
10	1	Breather Tube	.065" wall aluminum	.065" wall aluminum	.065" wall aluminum
11	1	Wiring Post			
12	1	Impeller			
13 A	1	Upper Windband	.080" aluminum	.080" aluminum	.080" aluminum
13 B	1	Middle Windband	.080" aluminum	.080" aluminum	.080" aluminum
13 C	1	Middle Windband	.080" aluminum	.080" aluminum	.080" aluminum
13 D	1	Lower Windband	.080" aluminum	.080" aluminum	.080" aluminum
14	1	Breather Tube Cover	.063" aluminum	.063" aluminum	.063" aluminum
15	1	Disconnect Switch			
16	1	Base Bracket	12 ga. G90 galv.	12 ga. G90 galv.	12 ga. G90 galv.
17	△	1/4"– 20 Nuts and Bolts	7 bolts per flange union	7 bolts per flange union	7 bolts per flange union
18	△	1/4"– 20 Nuts and Bolts	5 bolts per flange union	5 bolts per flange union	5 bolts per flange union

Ⓑ

Ⓑ

RICHARD BOYETTE LICENSE No 42485 STATE OF FLORIDA PROFESSIONAL ENGINEER

* Steel material gages shown are nominal. Aluminum thicknesses shown are nominal. Actual thicknesses will vary in accordance with industry standard tolerances.

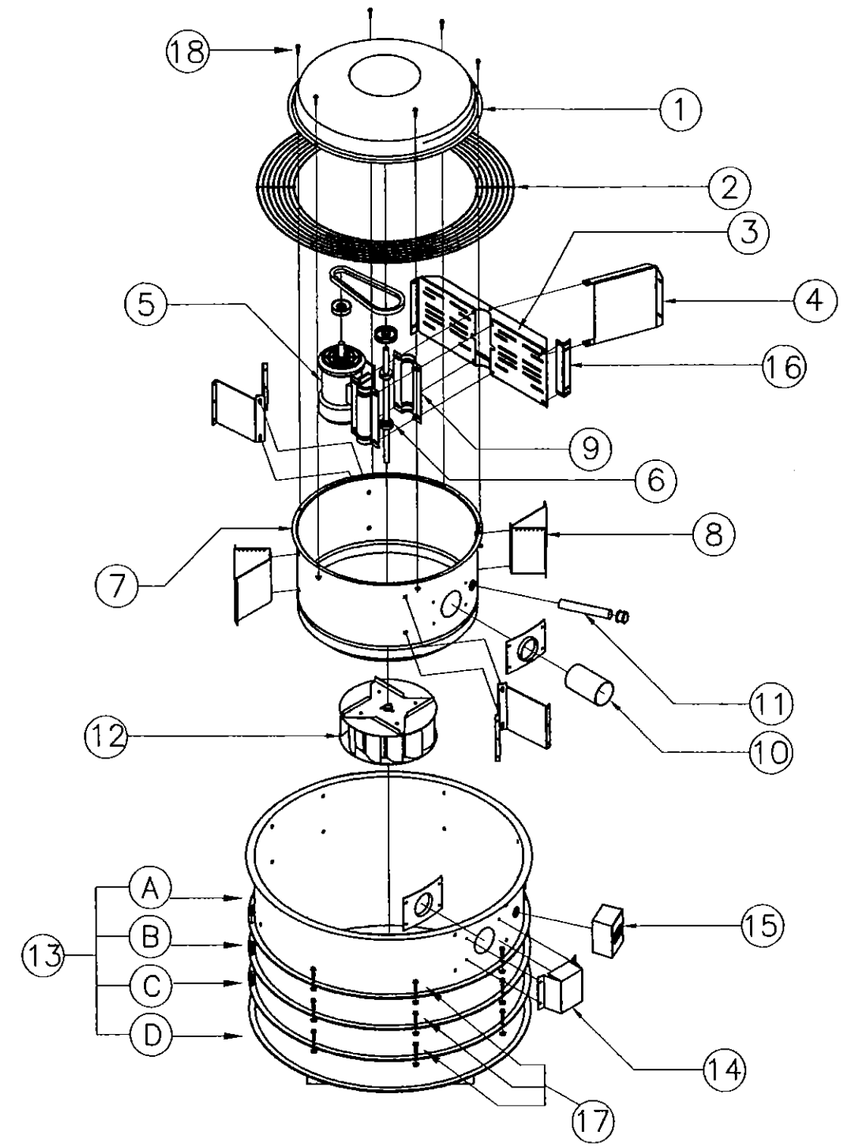

PRODUCT REVISED
as complying with the Florida Building Code
Acceptance No 15-0706.07
Expiration Date 01/13/2016
By
Miami-Dade Product Control

APPROVED MAY 28 2015

Richard Boyette, FL PE #42485
Rick Boyette Consulting Inc – CoA #9707
4031 Coconut Blvd
Royal Palm Beach FL 33411
561–790–5766

PNUXP080 – PNU245 Fans

DWG NO. 686759	Sheet 3/5
TITLE PDU-PNU HURRICANE FANS	
MAT'L	
DRAFTER TCR	DATE 05/19/10/10
DESIGN ENG. TCR 05/19/10	RELEASED
CHKD BY / MFG.	SCALE NTS

LET.	REVISION RECORD	BY	CKD.	DATE
B	UPDATED AND MERGED PNU NOMENCLATURE	BPF	TCR	4/8/11
B	REMOVED DUPLICATE DATA FOR PNU245	BPF	TCR	4/8/11
C	REVISED FOR FLORIDA BUILDING CODE 2010	BPF	TCR	7/6/12
D	REVISED FOR 2014 FBC	TCR	TGB	5/28/15

Acme Engineering & Manufacturing Corp.
1820 N. York Street
Muskogee, OK 74403
918–682–7791

Ⓑ

Item#	Qty.	Item / Size	235, 240, 245	290, 295, 300
1	1	Motor Enclosure Cover	.050" aluminum	.050" aluminum
2	1	Discharge Guard	.125" galv. wire	.177" galv. wire
3	1	Drive Base	12 ga. G90 galv.	10 ga. G90 galv.
4	1	Motor		
5	1	Breather Tube	.065" wall aluminum	.065" wall aluminum
6	1	Motor Enclosure Support	14 ga. G90 galv.	12 ga. G90 galv.
7	1	Motor Enclosure	20 ga. G90 galv.	20 ga. G90 galv.
8	1	Motor Enclosure Base	20 ga. G90 galv.	16 ga. G90 galv.
9	1	Impeller		
10	8	Support Channel	14 ga. G90 galv.	12 ga. G90 galv.
11	2	Corner Support		.063" aluminum
12	1	Breather Tube Cover	.063" aluminum	.063" aluminum
13 A	1	Upper Windband Assembly	.080" aluminum	.080" aluminum
13 B	1	Middle Windband Assembly	.080" aluminum	.080" aluminum
13 C	1	Middle Windband Assembly	.080" aluminum	.080" aluminum
13 D	1	Lower Windband Assembly	.080" aluminum	.080" aluminum
14	1	Drive Base	12 ga. G90 galv.	10 ga. G90 galv.
15	1	Shaft & Bearing Assembly		
16	2	Bearing Cap	10 ga. G90 galv.	10 ga. G90 galv.
17	24	1/4" – 20 Bolts & Nuts	8 per flange union	8 per flange union
18	6	1/4" – 20 Bolts & Nuts	6 per flange union	6 per flange union

* Steel material gages shown are nominal. Aluminum thicknesses shown are nominal. Actual thicknesses will vary in accordance with industry standard tolerances.

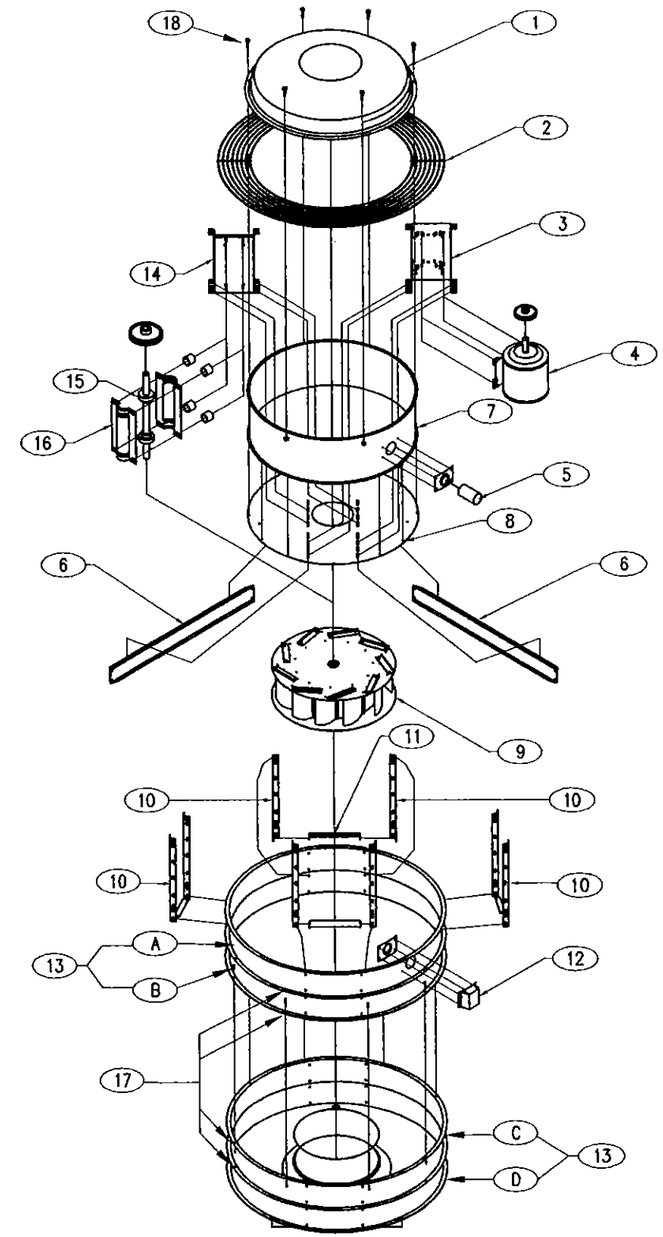

PRODUCT REVISED
as complying with the Florida Building Code
Acceptance No 15-0706.07
Expiration Date 01/13/2016
By
Miami Dade Product Control

APPROVED MAY 28 2015

RICHARD BOYETTE LICENSE No 42485 STATE OF FLORIDA PROFESSIONAL ENGINEER

Richard Boyette, FL PE #42485
Rick Boyette Consulting Inc – CoA #9707
4031 Coconut Blvd
Royal Palm Beach FL 33411
561-790-5766

PNU235 – PNU300 Fans

DWG NO. 686759 Sheet 4/5

TITLE PDU-PNU HURRICANE FANS

MAT'L

DRAFTER TCR DATE 05/19/10

DESIGN ENG. TCR 05/19/10 RELEASED

CHKD BY MFG. SCALE NTS

LET.	REVISION RECORD	BY	CKD.	DATE
B	UPDATED AND MERGED PNU NOMENCLATURE	BPF	TCR	4/8/11
C	REVISED FOR FLORIDA BUILDING CODE 2010	BPF	TCR	7/6/12
D	REVISEDFOR 2014 FBC	TCR	TGB	5/28/15

Acme Engineering & Manufacturing Corp.
1820 N. York Street
Muskogee, OK 74403
918-682-7791

Large Missile Impact Resistant
Max rated design pressure : +53.0 / −112.0 PSF

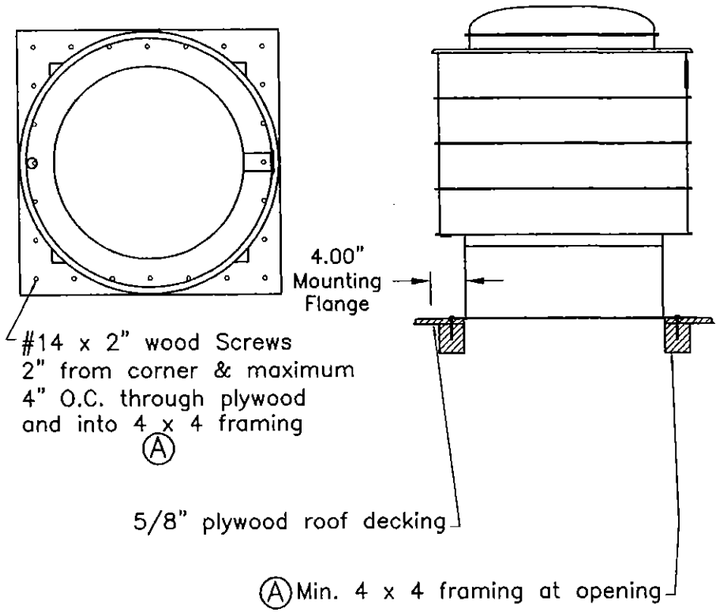

Elevation View Plan View

Wood Deck Installation

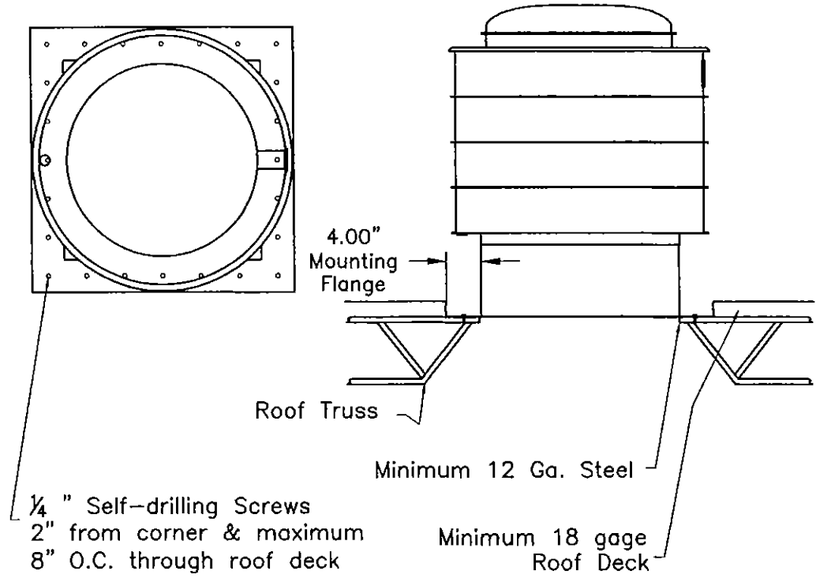

Elevation View Plan View

Metal Building Installation

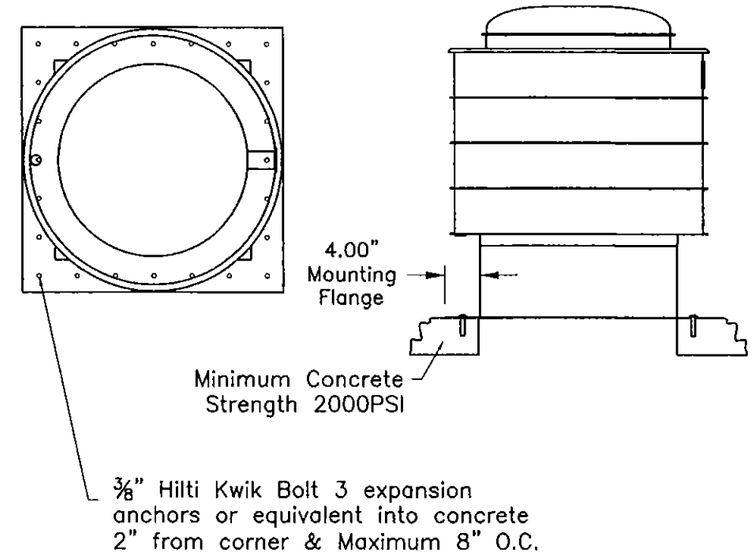

Elevation View Plan View

Concrete Deck Installation

PRODUCT REVISED
as complying with the Florida
Building Code
Acceptance No 15-0706.07
Expiration Date 01/13/2016
By
Miami-Dade Product Control

APPROVED MAY 28 2015

RICHARD BOYETTE LICENSE No 42485 STATE OF FLORIDA PROFESSIONAL ENGINEER

Richard Boyette, FL PE #42485
Rick Boyette Consulting Inc – CoA #9707
4031 Coconut Blvd
Royal Palm Beach FL 33411
561-790-5766

Model				Mounting Flange Dimensions	Installation Type / Bolt Count		
					Wood Deck	Metal Building	Concrete Deck
PDU080				21.5" x 21.5"	20	16	16
PDU100				21.5" x 21.5"	20	16	16
PDU110				21.5" x 21.5"	20	16	16
PDU120				27" x 27"	24	16	16
PDU135				27" x 27"	24	16	16
PDU150	PDU165			32" x 32"	28	20	20
PDU185	PDU200			36" x 36"	32	20	20
PNU080	PNU100			32" x 32"	28	20	20
PNU120	PNU135			32" x 32"	28	20	20
PNU150	PNU155	PNU160	PNU165	36" x 36"	32	20	20
PNU185	PNU200			36" x 36"	32	20	20
PNU235	PNU240	PNU245		42" x 42"	40	24	24
PNU290	PNU295	PNU300		48" x 48"	54	32	24

DWG NO. 686759 Sheet 5/5

TITLE PDU - PNU Hurricane Fans

MAT'L

DRAFTER TCR DATE 04/12/10

DESIGN ENG. TCR 04/12/10 RELEASED

CHKD BY MFG. SCALE NTS

LET.	REVISION RECORD	BY	CKD.	DATE
A	CHANGED FRAME SIZE TO 4 X 4	TCR		12/7/10
B	UPDATED AND MERGED PNU NOMENCLATURE	BPF	TCR	4/8/11
C	REVISED FOR FLORIDA BUILDING CODE 2010	BPF	TCR	7/3/12
D	REVISED FOR 2014 FBC	TCR	TGB	5/28/15

Acme Engineering &
Manufacturing Corp.
1820 N. York Street
Muskogee, OK 74403
918-682-7791