MIAMI-DADE COUNTY
PRODUCT CONTROL SECTION
11805 SW 26 Street, Room 208
Miami, Florida 33175-2474
T (786) 315-2590 F (786) 315-2599
www.miamidade.gov/economy

DEPARTMENT OF REGULATORY AND ECONOMIC RESOURCES (RER)
BOARD AND CODE ADMINISTRATION DIVISION

NOTICE OF ACCEPTANCE (NOA)

ACME Engineering and Manufacturing Corporation
1820 N. York Street
Muskogee, OK 74403

SCOPE:

This NOA is being issued under the applicable rules and regulations governing the use of construction materials. The documentation submitted has been reviewed and accepted by Miami-Dade County RER-Product Control Section to be used in Miami Dade County and other areas where allowed by the Authority Having Jurisdiction (AHJ).

This NOA shall not be valid after the expiration date stated below. The Miami-Dade County Product Control Section (In Miami Dade County) and/or the AHJ (in areas other than Miami Dade County) reserve the right to have this product or material tested for quality assurance purposes. If this product or material fails to perform in the accepted manner, the manufacturer will incur the expense of such testing and the AHJ may immediately revoke, modify, or suspend the use of such product or material within their jurisdiction. RER reserves the right to revoke this acceptance, if it is determined by Miami-Dade County Product Control Section that this product or material fails to meet the requirements of the applicable building code.

This product is approved as described herein, and has been designed to comply with the Florida Building Code, including the High Velocity Hurricane Zone.

DESCRIPTION: Series QBR, 3000 and 8100 Steel Rooftop Fans

APPROVAL DOCUMENT: Drawing No. **646020**, titled "Rooftop Fans", sheets 1 through 8 of 8, dated 05/19/2011, with revision D dated 06/02/2015, prepared by ACME Engineering and Manufacturing Corporation, signed and sealed by Richard O. Boyette, P.E., bearing the Miami-Dade County Product Control revision stamp with the Notice of Acceptance number and expiration date by the Miami-Dade County Product Control Section.

MISSILE IMPACT RATING: Large and Small Missile Impact Resistant

LABELING: Each unit shall bear a permanent label with the manufacturer's name or logo, city, state, model/series, and following statement: "Miami-Dade County Product Control Approved", unless otherwise noted herein.

RENEWAL of this NOA shall be considered after a renewal application has been filed and there has been no change in the applicable building code negatively affecting the performance of this product.

TERMINATION of this NOA will occur after the expiration date or if there has been a revision or change in the materials, use, and/or manufacture of the product or process. Misuse of this NOA as an endorsement of any product, for sales, advertising or any other purposes shall automatically terminate this NOA. Failure to comply with any section of this NOA shall be cause for termination and removal of NOA.

ADVERTISEMENT: The NOA number preceded by the words Miami-Dade County, Florida, and followed by the expiration date may be displayed in advertising literature. If any portion of the NOA is displayed, then it shall be done in its entirety.

INSPECTION: A copy of this entire NOA shall be provided to the user by the manufacturer or its distributors and shall be available for inspection at the job site at the request of the Building Official.

This NOA **revises NOA # 14-0825.04** and consists of this page 1 and evidence pages E-1 and E-2, as well as approval document mentioned above.

The submitted documentation was reviewed by **Carlos M. Utrera, P.E.**

MIAMI-DADE COUNTY APPROVED

09/01/2015

NOA No. 15-0706.08
Expiration Date: February 21, 2018
Approval Date: September 10, 2015

NOTICE OF ACCEPTANCE: EVIDENCE SUBMITTED

A. DRAWINGS

1. Drawing No. **646020**, titled "Rooftop Fans", sheets 1 through 8 of 8, dated 05/19/2011, with revision D dated 06/02/2015, prepared by ACME Engineering and Manufacturing Corporation, signed and sealed by Richard O. Boyette, P.E.

B. TESTS *"Submitted under NOA # 11-1117.04"*

1. Test report on 1) Uniform Static Air Pressure Test per FBC, TAS 202-94
   2) Large Missile Impact Test per FBC, TAS 201-94,
   3) Cyclic Wind Pressure Test per FBC, TAS 203-94,
   along with marked-up drawings and installation diagram of three Model QBR365 Steel Flush Mount Centrifugal Up-Blast Roof Fans, prepared by Architectural Testing, Inc., Test Report No. **B0598.01-801-18**, dated 06/30/2011, signed and sealed by Shawn G. Collins, P.E.
2. Test report on 1) Uniform Static Air Pressure Test per FBC, TAS 202-94
   2) Large Missile Impact Test per FBC, TAS 201-94,
   along with marked-up drawings and installation diagram of a Model QBR100 Steel Flush Mount Centrifugal Up-Blast Roof Fan, prepared by Architectural Testing, Inc., Test Report No. **B6888.01-801-18**, dated 02/07/2012, signed and sealed by Shawn G. Collins, P.E.
3. Test report on 1) Uniform Static Air Pressure Test per FBC, TAS 202-94
   2) Large Missile Impact Test per FBC, TAS 201-94,
   along with marked-up drawings and installation diagram of three Model QBR100 Steel Flush Mount Centrifugal Up-Blast Roof Fans, prepared by Architectural Testing, Inc., Test Report No. **B6888.02-801-18**, dated 04/16/2012, signed and sealed by Shawn G. Collins, P.E.
4. Test report on 1) Uniform Static Air Pressure Test per FBC, TAS 202-94
   2) Large Missile Impact Test per FBC, TAS 201-94,
   along with marked-up drawings and installation diagram of three Model 3037H CL/1 and 3012H CL/1 Steel Flush Mount Centrifugal Up-Blast Roof Fans, prepared by Architectural Testing, Inc., Test Report No. **C0480.01-801-18**, dated 07/12/2012, signed and sealed by Shawn G. Collins, P.E.

09/01/2015

Carlos M. Utrera, P.E.
Product Control Examiner
NOA No. 15-0706.08
Expiration Date: February 21, 2018
Approval Date: September 10, 2015

NOTICE OF ACCEPTANCE: EVIDENCE SUBMITTED

C. CALCULATIONS

1. Anchorage verification calculations prepared by Rick Boyette Consulting, Inc, dated 06/02/2015, signed and sealed by Richard O. Boyette, P.E.

   "Submitted under NOA # 11-1117.04"

2. Anchorage verification calculations, prepared by Rick Boyette Consulting, Inc, dated 11/11/2012, signed and sealed by Richard O. Boyette, P.E.

D. QUALITY ASSURANCE

1. Miami-Dade Department of Regulatory and Economic Resources (RER)

E. MATERIAL CERTIFICATIONS

1. Mason industries spring mount type 'SSLFH' and neoprene mount type 'BR' data sheets.

F. STATEMENTS

1. Statement letter of code conformance to the 5th edition (2014) FBC issued by Rick Boyette Consulting, Inc, dated 06/02/2015, signed and sealed by Richard O. Boyette, P.E.
2. No financial interest letter issued by Rick Boyette Consulting, Inc, dated 06/29/2015, signed and sealed by Richard O. Boyette, P.E.

09/01/2015

Carlos M. Utrera, P.E.
Product Control Examiner
NOA No. 15-0706.08
Expiration Date: February 21, 2018
Approval Date: September 10, 2015

Large Missile Impact Resistant
Max rated design pressure : +53.0 / −112.0 PSF

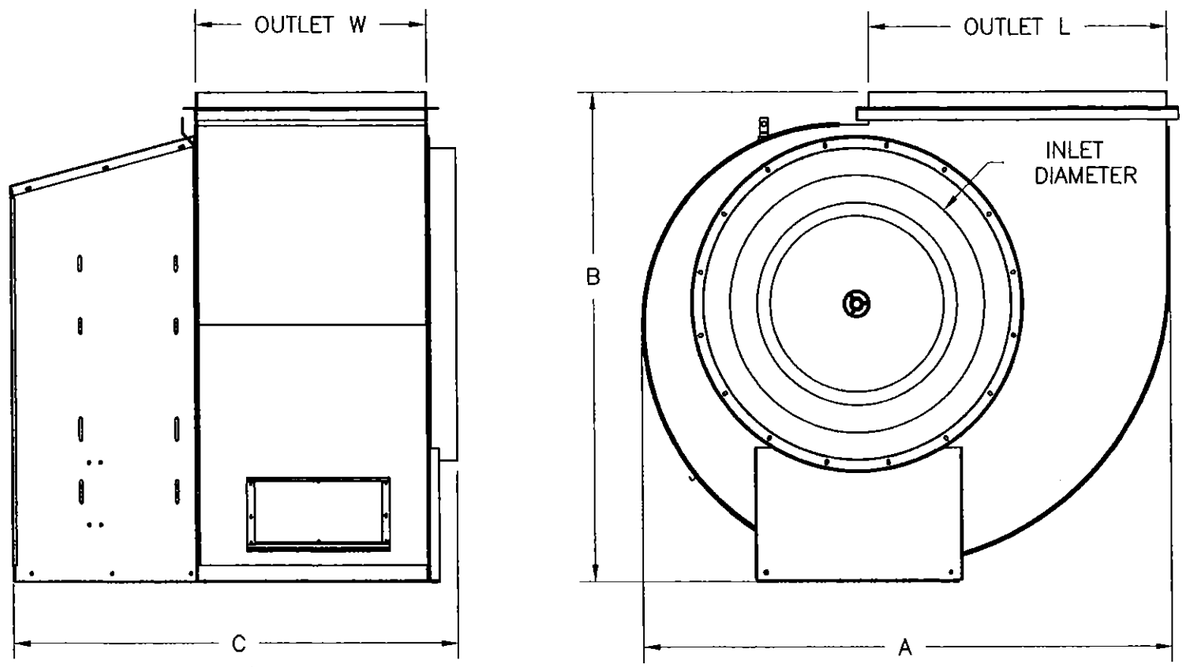

DIMENSIONAL DATA							
MODELS	A	B	C	INLET DIA	OUTLET L X W		EST UNIT WEIGHT (lbs.)
QBR100H	18.94	20.69	18.86	10.13	10.56	7	91
QBR137H	25.9	27.36	25.47	15.13	14.52	10.81	142
QBR161H	30.52	32.26	29.41	16.88	17.16	12.75	190
QBR200H	37.64	38.7	34.93	21.31	21.22	15.75	270
QBR245H	46	48.58	41.42	26.38	26	19.24	356
QBR270H	50.66	53.12	43.33	30.19	28.66	21.15	391
QBR300H	56.22	62.49	47.46	31.69	31.84	23.52	536
QBR330H	61.81	64.35	49.82	36.19	35.02	25.88	585
QBR365H	68.33	70.72	53.55	40.19	38.73	29.61	689
3012H	25.19	33.25	35	13.5	12.94	9.75	160
3013H	27.63	34.06	36.12	14.75	14.25	10.88	180
3015H, 8115H	30.63	35.19	37	16.25	15.88	11.75	221
3016H	33.44	36.19	38.38	18.25	17.38	13.13	252
3018H, 8118H	35	38	45	20	19.25	14.5	275
3020H, 8120H	39	43	47	22	21.13	16	330
3022H, 8122H	43	45	49	24	23.5	17.63	380
3024H, 8124H	47	52	54	27	25.88	19.5	520
3027H, 8127H	52	53	56	30	28.5	21.5	580
3030H, 8130H	58	60	60	33	31.63	23.63	775
3033H, 8133H	63	69	66	36	34.88	26.25	950
3037H, 8137H	70	71	68	39	38.5	28.88	1050
QBR100SEH	18.94	20.69	21.86	10.13	10.56	7	93
QBR137SEH	25.9	27.36	28.47	15.13	14.52	10.81	145
QBR161SEH	30.52	32.26	32.41	16.88	17.16	12.75	194
QBR200SEH	37.64	38.7	37.93	21.31	21.22	15.75	275
QBR245SEH	46	48.58	44.42	26.38	26	19.24	363
QBR270SEH	50.66	53.12	46.33	30.19	28.66	21.15	399
QBR300SEH	56.22	62.49	50.46	31.69	31.84	23.52	547
QBR330SEH	61.81	64.35	52.82	36.19	35.02	25.88	597
QBR365SEH	68.33	70.72	56.55	40.19	38.73	29.61	703
8115SEH	30.63	35.19	40	16.25	15.88	11.75	225
8118SEH	35	38	48	20	19.25	14.5	281
8120SEH	39	43	50	22	21.13	16	337
8122SEH	43	45	52	24	23.5	17.63	388
8124SEH	47	52	57	27	25.88	19.5	530
8127SEH	52	53	59	30	28.5	21.5	592
8130SEH	58	60	63	33	31.63	23.63	791
8133SEH	63	69	69	36	34.88	26.25	969
8137SEH	70	71	71	39	38.5	28.88	1071

Dimensions are in inches unless otherwise noted.

PRODUCT REVISED
as complying with the Florida Building Code
Acceptance No 15-0706.08
Expiration Date 02/21/2018
By
Miami Dade Product Control

APPROVED JUN 0 2 2015

RICHARD BOYETTE LICENSE No 42485 STATE OF FLORIDA PROFESSIONAL ENGINEER

Richard Boyette, FL PE #42485
Rick Boyette Consulting Inc – CoA #9707
4031 Coconut Blvd
Royal Palm Beach FL 33411
561-790-5766

DWG NO. 646020	Sheet 1/8		
TITLE QBR, 3000, 8100 ROOFTOP FANS			
MAT'L			
DRAFTER BPF	DATE 5/19/11		
DESIGN ENG. TCR 5/19/11	RELEASED		
CHKD BY	MFG.	SCALE NTS	

LET.	REVISION RECORD	BY	CKD.	DATE
A	Revisions per Miami-Dade	BPF	TCR	2/27/12
B	Revision to sheet 6 line 12 per Miami Dade.	TCR	TGB	1/24/13
C	Revisions to sheet 5 concerning isolators.	TCR	TGB	8/5/14
D	REVISED FOR FBC 2014	TCR	TGB	6/2/15

Acme Engineering & Manufacturing Corp.
1820 N. York Street
Muskogee, OK 74403
918-682-7791

Large Missile Impact Resistant
Max rated design pressure : +53.0 / −112.0 PSF

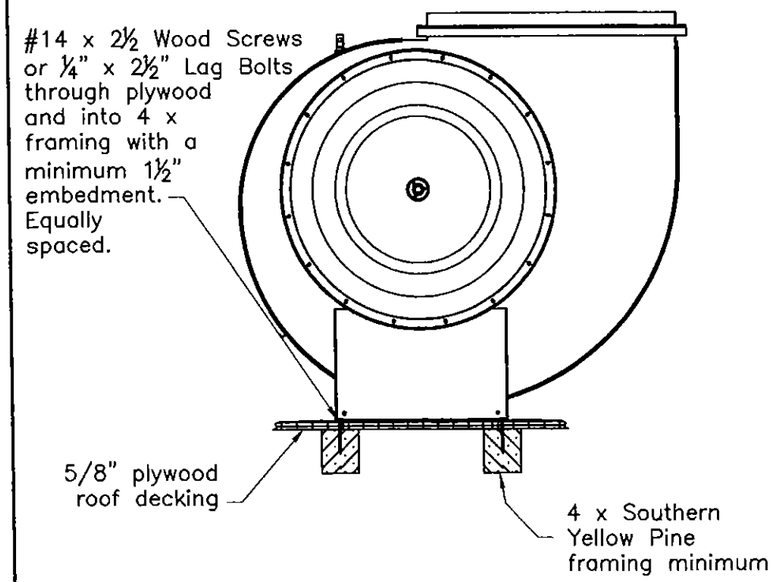

Elevation View

Wood Deck Installation

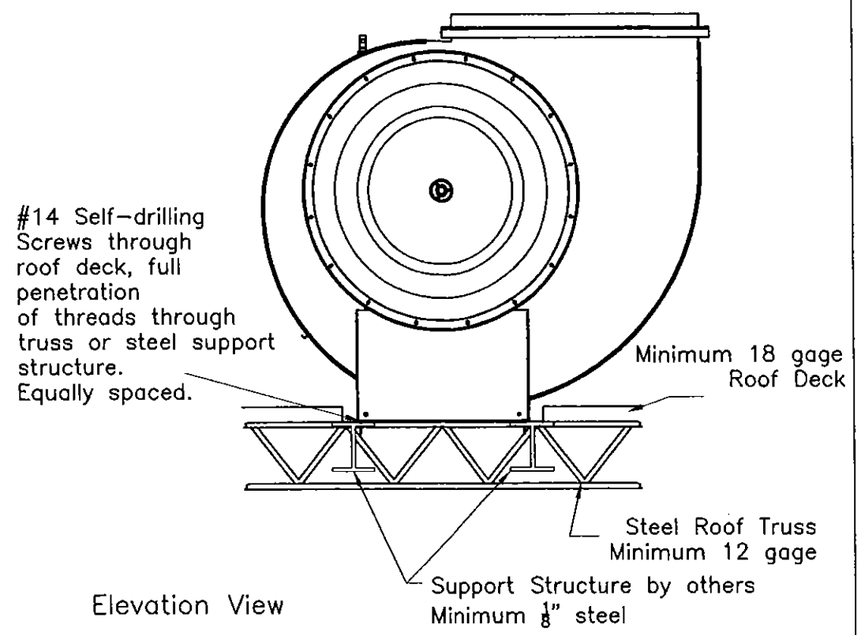

Elevation View

Metal Building Installation

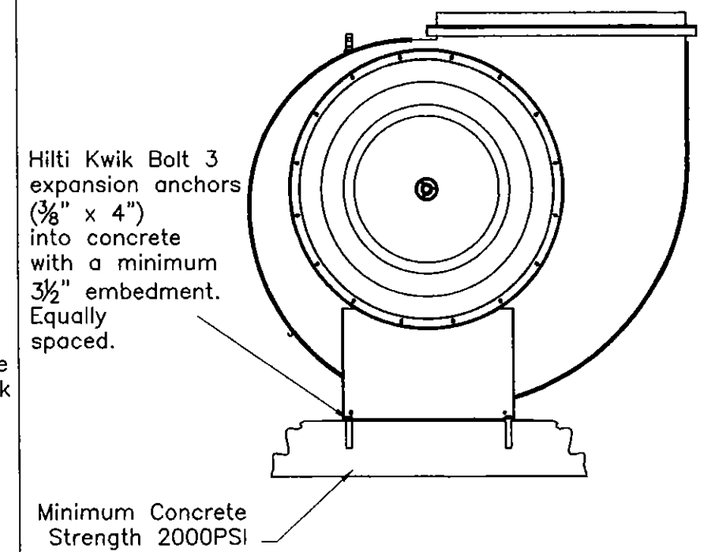

Elevation View

Concrete Deck Installation

PRODUCT REVISED
as complying with the Florida Building Code
Acceptance No 15-0706.08
Expiration Date 02/21/2018
By
Miami Dade Product Control

APPROVED JUN 0 2 2015

Richard Boyette, FL PE #42485
Rick Boyette Consulting Inc – CoA #9707
4031 Coconut Blvd
Royal Palm Beach FL 33411
561-790-5766

RICHARD BOYETTE LICENSE No 42485 STATE OF FLORIDA PROFESSIONAL ENGINEER

DWG NO.	646020 Sheet 2/8
TITLE	QBR, 3000, 8100 ROOFTOP FANS
MAT'L	
DRAFTER	BPF
DATE	3-9-11
DESIGN ENG.	TCR 3-9-11
RELEASED	
CHKD BY	
MFG.	
SCALE	NTS

LET.	REVISION RECORD	BY	CKD.	DATE
A	Revisions per Miami-Dade	BPF	TCR	2/27/12
B	Revision to sheet 6 line 12 per Miami Dade.	TCR	TGB	1/24/13
C	Revisions to sheet 5 concerning isolators.	TCR	TGB	8/5/14
D	REVISED FOR FBC 2014	TCR	TGB	6/2/15

Acme Engineering & Manufacturing Corp.
1820 N. York Street
Muskogee, OK 74403
918-682-7791

Large Missile Impact Resistant
Max rated design pressure : +53.0 / −112.0 PSF

SMOKE EXHAUST MODELS - FOUNDATION PLAN & FASTENERS FOR CONCRETE						
Model	*BOLT SIZE*	*CC*	*BC*	*BD*	*BE*	*BF*
QBR100SEH	3/8"	5.06	4.25	7.69	17.44	-
QBR137SEH	3/8"	7	6.19	9.5	22	-
QBR161SEH	3/8"	8.31	7	11	24.5	-
QBR200SEH	3/8"	9.5	7.88	12.94	27.44	-
QBR245SEH	3/8"	10	10.5	15.19	30.5	-
QBR270SEH	3/8"	10.03	11.63	16.31	33.31	-
QBR300SEH	3/8"	11.56	12.63	16.38	26.76	37.14
QBR330SEH	3/8"	11.56	14	17.5	27.88	38.23
QBR365SEH	3/8"	12.06	15.69	19.56	29.94	40.32
8115SEH	3/8"	8.25	0	8	14.5	-
8118SEH	3/8"	9.75	8.5	9.38	17	-
8120SEH	3/8"	9.75	9.25	10.13	17	-
8122SEH	3/8"	9.75	10.06	10.94	17	-
8124SEH	3/8"	11.5	11	11.94	21	-
8127SEH	3/8"	11.5	12	12.94	21	-
8130SEH	3/8"	11.5	13.06	14	21	-
MODEL	*BOLT SIZE*	*L*	*Q*	*R*	*S*	*U*
8133SEH	3/8"	21.5	14.34	4.25	24.81	14.19
8137SEH	3/8"	23.25	15.66	4.25	24.81	14.19

Dimensions are in inches unless otherwise noted.

STANDARD MODELS - FOUNDATION PLAN & FASTENERS FOR CONCRETE						
Model	*BOLT SIZE*	*CC*	*BC*	*BD*	*BE*	*BF*
QBR100H	3/8"	5.06	4.25	4.69	14.44	-
QBR137H	3/8"	7	6.19	6.5	19	-
QBR161H	3/8"	8.31	7	8	21.5	-
QBR200H	3/8"	9.5	7.88	9.94	24.44	-
QBR245H	3/8"	10	10.5	12.19	27.5	-
QBR270H	3/8"	10.03	11.63	13.31	30.31	-
QBR300H	3/8"	11.56	12.63	13.38	23.76	34.14
QBR330H	3/8"	11.56	14	14.5	24.88	35.23
QBR365H	3/8"	12.06	15.69	16.56	26.94	37.32
3012H	3/8"	8.25	0	7	14.5	-
3013H	3/8"	8.25	0	7.56	14.5	-
3015H, 8115H	3/8"	8.25	0	8	14.5	-
3016H	3/8"	8.25	0	8.69	14.5	-
3018H, 8118H	3/8"	9.75	8.5	9.38	17	-
3020H, 8120H	3/8"	9.75	9.25	10.13	17	-
3022H, 8122H	3/8"	9.75	10.06	10.94	17	-
3024H, 8124H	3/8"	11.5	11	11.94	21	-
3027H, 8127H	3/8"	11.5	12	12.94	21	-
3030H, 8130H	3/8"	11.5	13.06	14	21	-
MODEL	*BOLT SIZE*	*L*	*Q*	*R*	*S*	*U*
3033H, 8133H	3/8"	21.5	14.34	4.25	24.81	14.19
3037H, 8137H	3/8"	23.25	15.66	4.25	24.81	14.19

Footprint should be referenced for the quantity of bolts required for mounting.

○ = 9/16" holes for 1/2" bolts

FOUNDATION PLAN - CONCRETE

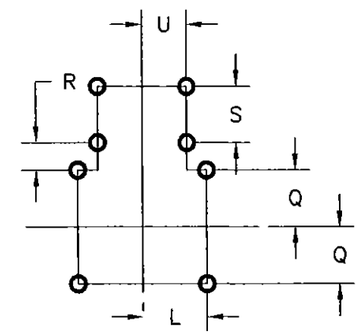

SIZES 3033–3037
SIZES 8133–8137

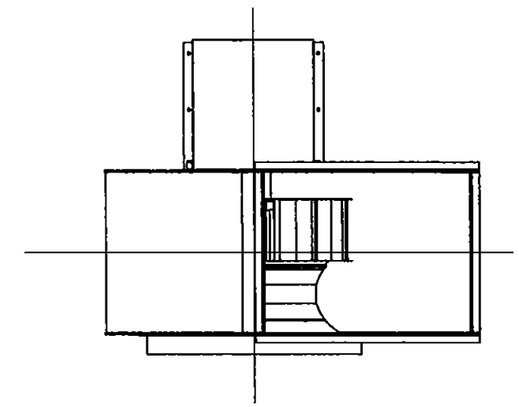

PLAN VIEW

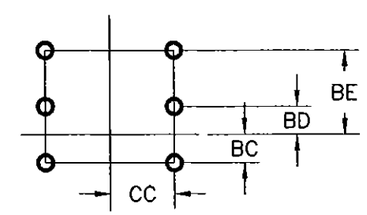

SIZES QBR 100–270
SIZES 3012–3016
SIZES 8115

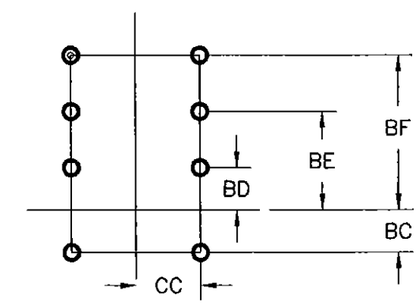

SIZES QBR 300–365
SIZES 3018–3030
SIZES 8118–8130

PRODUCT REVISED
as complying with the Florida
Building Code
Acceptance No 15-0706.08
Expiration Date 02/21/2018
By
Miami Dade Product Control

APPROVED JUN 0 2 2015

Richard Boyette, FL PE #42485
Rick Boyette Consulting Inc – CoA #9707
4031 Coconut Blvd
Royal Palm Beach FL 33411
561–790–5766

RICHARD BOYETTE LICENSE No 42485 STATE OF FLORIDA PROFESSIONAL ENGINEER

DWG NO. 646020	Sheet 3/8
TITLE QBR, 3000, 8100 ROOFTOP FANS	
MAT'L	
DRAFTER BPF	DATE 5/20/11
DESIGN ENG. TCR 5/20/11	RELEASED
CHKD BY	MFG. / SCALE NTS

LET.	REVISION RECORD	BY	CKD.	DATE
A	Revisions per Miami–Dade	BPF	TCR	2/27/12
B	Revision to sheet 6 line 12 per Miami Dade.	TCR	TGB	1/24/13
C	Revisions to sheet 5 concerning isolators.	TCR	TGB	8/5/14
D	REVISED FOR FBC 2014	TCR	TGB	6/2/15

Acme Engineering &
Manufacturing Corp.
1820 N. York Street
Muskogee, OK 74403
918-682-7791

Large Missile Impact Resistant
Max rated design pressure : +53.0 / −112.0 PSF

FOUNDATION PLAN – WOOD & STEEL

SMOKE EXHAUST MODELS - FOUNDATION PLAN & FASTENERS FOR WOOD/STEEL

Model	Screw Size	# of Screws	CC	BC	BD	BE	BF
QBR100SEH	1/4"	8	5.06	4.25	7.69	17.44	-
QBR137SEH	1/4"	8	7	6.19	9.5	22	-
QBR161SEH	1/4"	8	8.31	7	11	24.5	-
QBR200SEH	1/4"	10	9.5	7.88	12.94	27.44	-
QBR245SEH	1/4"	12	10	10.5	15.19	30.5	-
QBR270SEH	1/4"	12	10.03	11.63	16.31	33.31	-
QBR300SEH	1/4"	16	11.56	12.63	16.38	26.76	37.14
QBR330SEH	1/4"	18	11.56	14	17.5	27.88	38.23
QBR365SEH	1/4"	20	12.06	15.69	19.56	29.94	40.32
8115SEH	1/4"	8	8.25	0	8	14.5	-
8118SEH	1/4"	14	9.75	8.5	9.38	17	-
8120SEH	1/4"	14	9.75	9.25	100.13	17	-
8122SEH	1/4"	14	9.75	10.06	10.94	17	-
8124SEH	1/4"	16	11.5	11	11.94	21	-
8127SEH	1/4"	18	11.5	12	12.94	21	-
8130SEH	1/4"	22	11.5	13.06	14	21	-
Model	**Screw Size**	**# of Screws**	**L**	**Q**	**R**	**S**	**U**
8133SEH	1/4"	28	21.5	14.34	4.25	24.81	14.19
8137SEH	1/4"	30	23.25	15.66	4.25	24.81	14.19

Dimensions are in inches unless otherwise noted.

STANDARD MODELS - FOUNDATION PLAN & FASTENERS FOR WOOD/STEEL

Model	Screw Size	# of Screws	CC	BC	BD	BE	BF
QBR100H	1/4"	8	5.06	4.25	4.69	14.44	-
QBR137H	1/4"	8	7.00	6.19	6.50	19.00	-
QBR161H	1/4"	8	8.31	7.00	8.00	21.50	-
QBR200H	1/4"	10	9.50	7.88	9.94	24.44	-
QBR245H	1/4"	12	10.00	10.50	12.19	27.50	-
QBR270H	1/4"	12	10.03	11.63	13.31	30.31	-
QBR300H	1/4"	16	11.56	12.63	13.38	23.76	37.14
QBR330H	1/4"	18	11.56	14.00	14.50	24.88	38.23
QBR365H	1/4"	20	12.06	15.69	16.56	26.94	40.32
3012H	1/4"	8	8.25	0.00	7.00	14.50	-
3013H	1/4"	8	8.25	0.00	7.56	14.50	-
3015H, 8115H	1/4"	8	8.25	0.00	8.00	14.50	-
3016H	1/4"	8	8.25	0.00	8.69	14.50	-
3018H, 8118H	1/4"	14	9.75	8.50	9.38	17.00	-
3020H, 8120H	1/4"	14	9.75	9.25	10.13	17.00	-
3022H, 8122H	1/4"	14	9.75	10.06	10.94	17.00	
3024H, 8124H	1/4"	16	11.50	11.00	11.94	21.00	-
3027H, 8127H	1/4"	18	11.50	12.00	12.94	21.00	
3030H, 8130H	1/4"	22	11.50	13.06	14.00	21.00	
Model	**Screw Size**	**# of Screws**	**L**	**Q**	**R**	**S**	**U**
3033H, 8133H	1/4"	28	21.50	14.34	4.25	24.81	14.19
3037H, 8137H	1/4"	30	23.25	15.66	4.25	24.81	14.19

Footprint should be referenced for the quantity of bolts required for mounting.

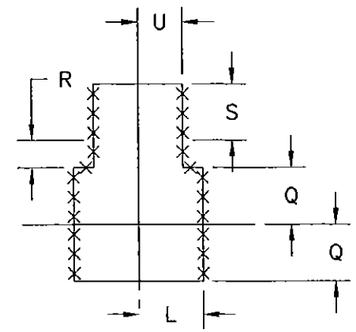

SIZES 3033–3037
SIZES 8133–8137

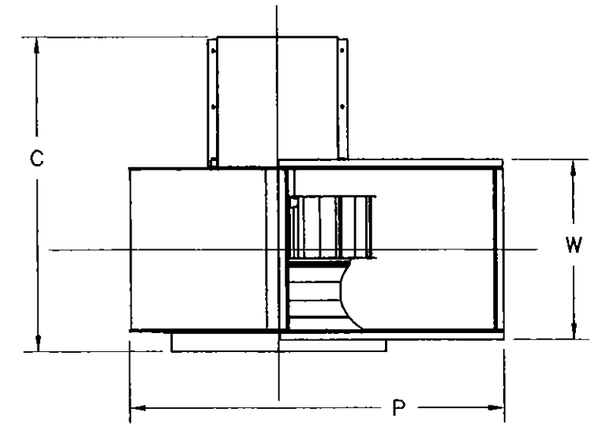

PLAN VIEW

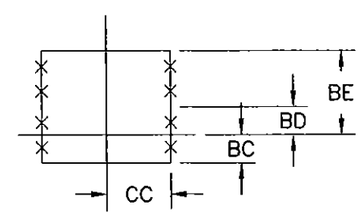

SIZES QBR 100–270
SIZES 3012–3016
SIZES 8115

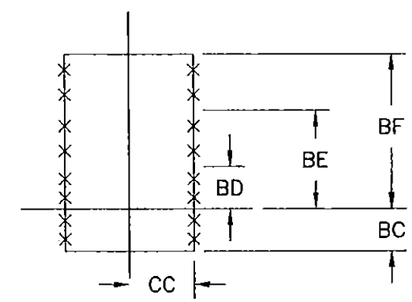

SIZES QBR 300–365
SIZES 3018–3030
SIZES 8118–8130

= 5/16" HOLES FOR 1/4" SHEET METAL/WOOD SCREWS OR 1/4" LAG BOLTS EQUALLY SPACED.

PRODUCT REVISED
as complying with the Florida Building Code
Acceptance No 15-0706.08
Expiration Date 02/21/2018
By
Miami-Dade Product Control

APPROVED JUN 0 2 2015

RICHARD BOYETTE LICENSE No 42485 STATE OF FLORIDA PROFESSIONAL ENGINEER

Richard Boyette, FL PE #42485
Rick Boyette Consulting Inc – CoA #9707
4031 Coconut Blvd
Royal Palm Beach FL 33411
561-790-5766

DWG NO. 646020	Sheet 4/8
TITLE QBR, 3000, 8100 ROOFTOP FANS	
MAT'L	
DRAFTER BPF	DATE 5/20/11
DESIGN ENG. TCR 5/20/11	RELEASED
CHKD BY / MFG.	SCALE NTS

LET.	REVISION RECORD	BY	CKD.	DATE
A	Revisions per Miami-Dade	BPF	TCR	2/27/12
B	Revision to sheet 6 line 12 per Miami Dade.	TCR	TGB	1/24/13
C	Revisions to sheet 5 concerning isolators.	TCR	TGB	8/5/14
D	REVISED FOR FBC 2014	TCR	TGB	6/2/15

Acme Engineering & Manufacturing Corp.
1820 N. York Street
Muskogee, OK 74403
918-682-7791

Large Missile Impact Resistant
Max rated design pressure : +53.0 / −112.0 PSF

Notes:

A. This rooftop ventilator has been designed to comply with the 2014 Florida Building Code, TAS 201−94, TAS 202−94, & TAS 203−94..

B. Roof structure must be designed to withstand the weight and loading transmitted by this rooftop ventilator.

C. This approval is for the structural capacity of the exterior housing only, it does not include any interior mechanism or electric part.

D. This rooftop ventilator has not been tested for wind driven rain according to Florida Building Code, TAS 100(A).

E. All fasteners must be corrosion resistant.

F. Utility fans should be secured by fasteners sized and located according to Sheet 3 or 4.

If fan is secured directly to roof Sheet 2 should be referenced.

If isolators are used manufacturer's recommendations must be followed with footprint locations specified on Sheet 3.

Notes (continued):

G. Spring Isolators shall be Mason Industries model SSLFH as specified in DATA SHEET DS−203−6.2 or equivalent. Neoprene isolators shall be Mason Industries model BR as specified in DATA SHEET DS−400−7.3A or equivalent. Isolators must be selected according to the manufacurer's recommendation.

H. Spring Isolators shall use ⅜" bolts.

I. Wood anchors minimum edge distance must be at least 4 times the anchor diameter (NDS 2005).

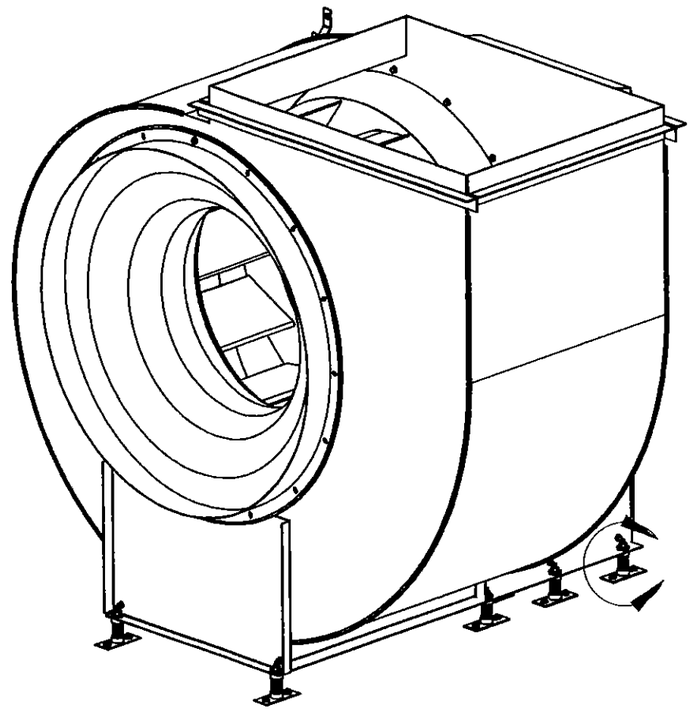

Mounting with Isolators

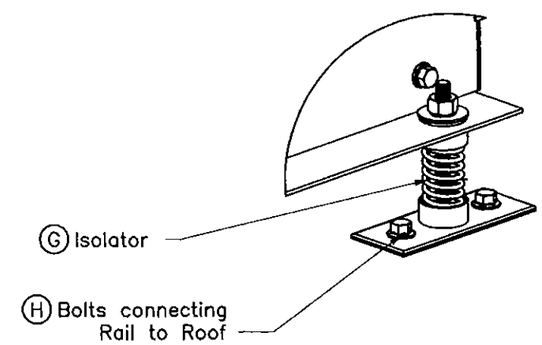

Detail
Scale: 1=8

Isolators by others. This example shows spring isolators, neoprene isolators may also be used.

Reference pages 3, 4, and 5 for bolt sizes and quantities.

PRODUCT REVISED
as complying with the Florida Building Code
Acceptance No 15-0706.08
Expiration Date 02/21/2018
By
Miami Dade Product Control

APPROVED JUN 0 2 2015

RICHARD BOYETTE LICENSE No 42485 STATE OF FLORIDA PROFESSIONAL ENGINEER

Richard Boyette, FL PE #42485
Rick Boyette Consulting Inc − CoA #9707
4031 Coconut Blvd
Royal Palm Beach FL 33411
561−790−5766

DWG NO. 646020	Sheet 5/8
TITLE QBR, 3000, 8100 ROOFTOP FANS	
MAT'L	
DRAFTER BPF	DATE 5/20/11
DESIGN ENG. TCR 5/20/11	RELEASED
CHKD BY / MFG.	SCALE NTS

LET.	REVISION RECORD	BY	CKD.	DATE
A	Revisions per Miami−Dade	BPF	TCR	2/27/12
B	Revision to sheet 6 line 12 per Miami Dade.	TCR	TGB	1/24/13
C	Revisions to sheet 5 concerning isolators.	TCR	TGB	8/5/14
D	REVISED FOR FBC 2014	TCR	TGB	6/2/15

Acme Engineering & Manufacturing Corp.
1820 N. York Street
Muskogee, OK 74403
918-682-7791

Models	A -Inlet Connection	Qty	B -Drive-Side Plate	Qty	C -Pedestal Connection	Qty	D -Motor Base	Qty	F -Bearing Base	Qty	G -Weather Cover Top #1	Qty	H -Weather Cover Top #2*	Qty	J -Weather Cover Back	Qty	K -Access Door	Qty	L -Base Angles	Qty
QBRH 100	1/4" Bolts & Nuts	8	1/4" Bolts & Nuts	8	5/16" Bolts & Nuts	4	1/2" Bolts & Nuts	4	1/2" Bolts & Nuts	4	1/4" Bolts & Nuts	4	1/4" Screws	4	1/4" Bolts & Nuts	4	1/4" Bolts & Nuts	8	N/A	N/A
QBRH 137																				
QBRH 161	5/16" Bolts & Nuts		5/16" Bolts & Nuts		3/8" Bolts & Nuts	6						6				6				
QBRH 200																				
QBRH 245	3/8" Bolts & Nuts		3/8" Bolts & Nuts	16		8										8			3/8" Bolts & Nuts	8
QBRH 270																				
QBRH 300												10							N/A	N/A
QBRH 330																				
QBRH 365																				
QBRSEH 137	1/4" Bolts & Nuts	8	1/4" Bolts & Nuts	8	5/16" Bolts & Nuts	6										6				
QBRSEH 161	5/16" Bolts & Nuts		5/16" Bolts & Nuts		3/8" Bolts & Nuts															
QBRSEH 200																				
QBRSEH 245	3/8" Bolts & Nuts		3/8" Bolts & Nuts	16		8										8			3/8" Bolts & Nuts	8
QBRSEH 270																				
QBRSEH 300																				
QBRSEH 330																				
QBRSEH 365																				

*Applicable to SE models only

Large Missile Impact Resistant
Max rated design pressure : +53.0 / −112.0 PSF

QBR SERIES – PARTS AND MATERIALS

#	PART DESCRIPTION	100	137	161	200	245	270	300	330	365
1	Pedestal Side	16 ga. crs	14 ga. crs	14 ga. crs	14 ga. crs	12 ga hrpo	12 ga. hrpo	12 ga. hrpo	12 ga. hrpo	12 ga. hrpo
2	Drive Base	12 ga. crs	12 ga. crs	12 ga hrpo	10 ga. hrpo	10 ga. hrpo	10 ga. hrpo	7 ga. hrpo	7 ga. hrpo	7 ga. hrpo
3	Mounting Plate	14 ga. crs	14 ga. crs	14 ga. crs	12 ga. hrpo	12 ga. hrpo	12 ga. hrpo	12 ga. hrpo	12 ga hrpo	12 ga. hrpo
4	Access Door	20 ga. crs	20 ga. crs	20 ga. crs	20 ga. crs	18 ga. crs	18 ga. crs	18 ga. crs	18 ga. crs	18 ga. crs
5	Reinforcement Strip	12 ga. crs	12 ga. crs	12 ga. hrpo	12 ga. hrpo	12 ga hrpo	12 ga. hrpo	12 ga. hrpo	12 ga. hrpo	12 ga. hrpo
6	Adapter Ring	16 ga. crs	16 ga. crs	16 ga. crs	14 ga. crs	14 ga. crs	14 ga. crs	14 ga. crs	14 ga. crs	14 ga. crs
7	Orifice	Alum 3003-0 .050	Alum 3003-14 .050	Alum 3003-0 .050	Alum 3003-0 .050	Alum 3003-0 .063	Alum 3003-0 .063	Alum 3003-0 .063	Alum 3003-0 .080	Alum 3003-14 .080
8	Weather Cover Top #1	20 ga. crs	18 ga. crs	18 ga. crs	18 ga. crs	16 ga. crs	16 ga. crs	16 ga. crs	16 ga. crs	16 ga. crs
9	Front Support	18 ga. crs	14 ga. crs	16 ga. crs	16 ga. crs	14 ga. crs	12 ga. hrpo	12 ga. hrpo	12 ga. hrpo	12 ga. hrpo
10	Weather Cover Back	20 ga. crs	18 ga. crs	18 ga. crs	18 ga. crs	16 ga. crs	14 ga. crs	16 ga. crs	16 ga. crs	16 ga. crs
11	Base Angle	–	–	–	–	–	–	12 ga. hrpo	12 ga. hrpo	12 ga. hrpo
12	Housing Scroll	12 ga. crs	12 ga. crs	12 ga. crs	14 ga. crs	14 ga. crs	14 ga. crs	14 ga. crs	14 ga. crs	14 ga. crs
13	Outlet Angle	16 ga. crs	16 ga. crs	16 ga. crs	14 ga. crs	14 ga. crs	14 ga. crs	10 ga. hrpo	10 ga. hrpo	10 ga. hrpo
14	Housing Side	14 ga. crs	14 ga. crs	12 ga. hrpo	12 ga. hrpo	12 ga. hrpo	12 ga. hrpo	12 ga. hrpo	12 ga. hrpo	12 ga. hrpo
15	Birdscreen*	19 ga. 1/2" x 1/2" Galvanized Wire	19 ga. 1/2" x 1/2" Galvanized Wire	19 ga. 1/2" x 1/2" Galvanized Wire	19 ga. 1/2" x 1/2" Galvanized Wire	19 ga. 1/2" x 1/2" Galvanized Wire	19 ga. 1/2" x 1/2" Galvanized Wire	19 ga. 1/2" x 1/2" Galvanized Wire	19 ga. 1/2" x 1/2" Galvanized Wire	19 ga. 1/2" x 1/2" Galvanized Wire
16	Weather Cover Top #2*	20 ga. crs	18 ga. crs	18 ga. crs	18 ga. crs	16 ga. crs	16 ga. crs	16 ga. crs	16 ga. crs	16 ga. crs
17	Wheel	Alum 3003-H14 .080	Alum 3003-H14 .050	Alum 3003-H14 .063	Alum 3003-H14 .063	Alum 3003-H14 .063	Alum 3003-H14 .063	Alum 3003-H14 .080	Alum 3003-H14 .080	Alum 3003-H14 .080

*Applicable to SE models only

Notes:
a. This rooftop exhaust fan has been designed to comply with the 2014 Florida Building Code, TAS 201-94, TAS 202-94 & TAS 203-94.
b. Roof structure must be designed to withstand the weight and loading transmitted by this rooftop exhaust fan.
c. This approval is for the structural capacity of the exterior housing only, it does not include any interior mechanism and/or electrical part.
d. This rooftop exhaust fan has not been tested for wind driven rain according to Florida Building Code, TAS 100(A).
e. All fasteners must be corrosion resistant.

1. "CRS" is an acronym for "cold rolled steel".
2. "HRPO" is an acronym for "hot rolled, pickled, and oiled".
3. Items 12, 13, and 14 make the housing weldment.
4. All pieces made of steel are painted using baked enamel.
5. In table above, line 17 gives material of backplate, the major structural component of wheel.

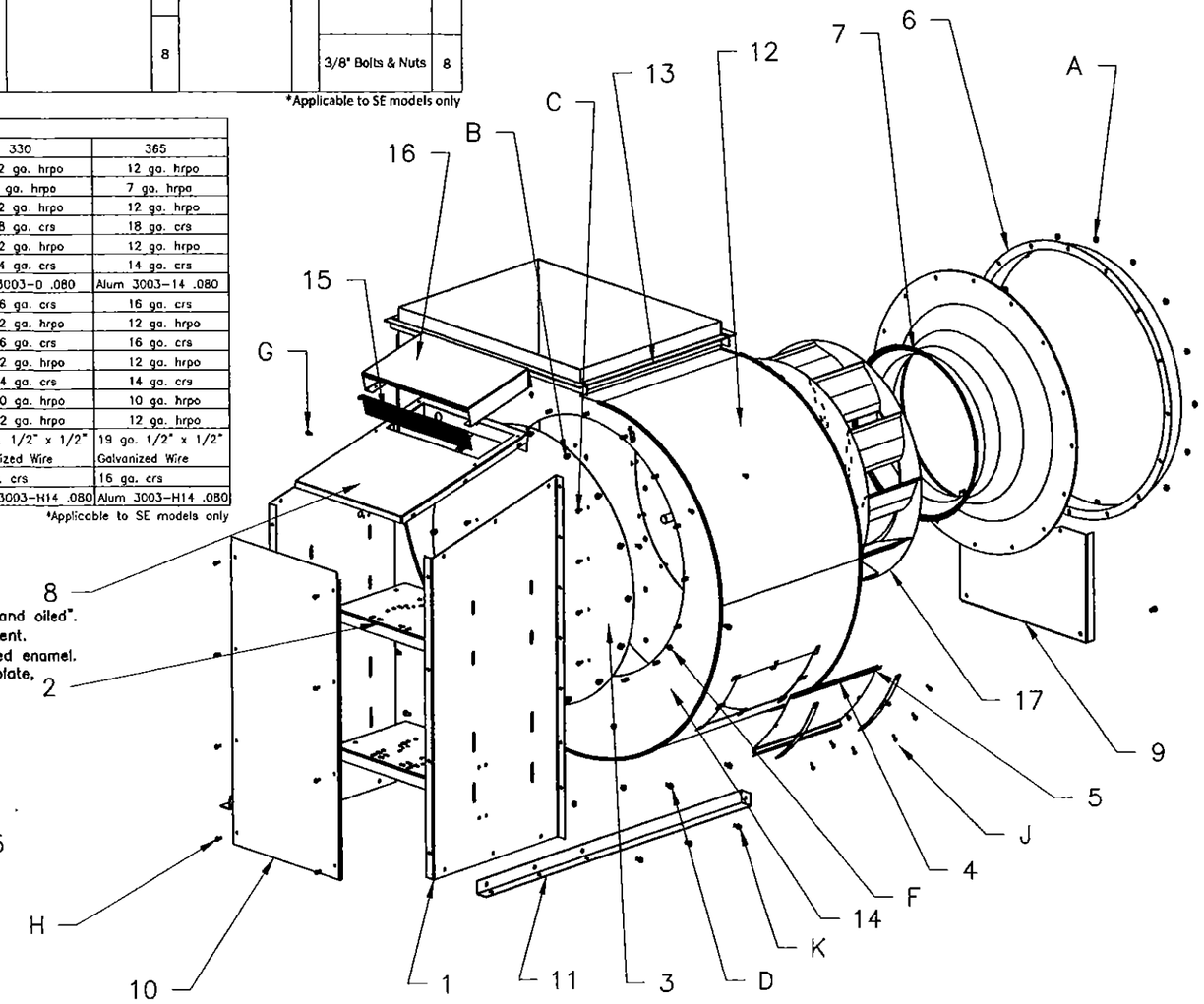

PRODUCT REVISED
as complying with the Florida Building Code.
Acceptance No 15-0706.08
Expiration Date 02/21/2018
By
Miami Dade Product Control

APPROVED JUN 0 2 2015

Richard Boyette, FL PE #42485
Rick Boyette Consulting Inc – CoA #9707
4031 Coconut Blvd
Royal Palm Beach FL 33411
561-790-5766

RICHARD G. BOYETTE LICENSE No 42485 STATE OF FLORIDA PROFESSIONAL ENGINEER

QBR SERIES
SIZES 100–365

DWG NO. 646020	Sheet 6/8
TITLE QBR, 3000, 8100 ROOFTOP FANS	
MAT'L	
DRAFTER BPF	DATE 4/21/11
DESIGN ENG. TCR 3/20/11	RELEASED
CHKD BY / MFG.	SCALE NTS

LET.	REVISION RECORD	BY	CKD.	DATE
A	Revisions per Miami-Dade	BPF	TCR	2/27/12
B	Revision to sheet 6 line 12 per Miami Dade.	TCR	TGB	1/24/13
C	Revisions to sheet 5 concerning isolators.	TCR	TGB	8/5/14
D	REVISED FOR FBC 2014	TCR	TGB	6/2/15

Acme Engineering & Manufacturing Corp.
1820 N. York Street
Muskogee, OK 74403
918-682-7791

		3000 & 8100 SERIES - PARTS AND MATERIALS									
		3012	3013	3015	3016	3018	3020	3022	3024	3027	3030
#	Component	-	-	8115	-	8118	8120	8122	8124	8127	8130
1	Housing Center	16 ga crs	16 ga crs	16 ga crs	14 ga crs	14 ga crs	14 ga crs	14 ga crs	14 ga crs	14 ga crs	14 ga crs
2	Housing Side	14 ga crs	14 ga crs	14 ga crs	14 ga crs	14 ga crs	14 ga crs	14 ga crs	12 ga hrpo	12 ga hrpo	12 ga hrpo
3	Inlet	14 ga crs	14 ga crs	14 ga crs	14 ga crs	14 ga crs	14 ga crs	14 ga crs	14 ga crs	14 ga crs	14 ga crs
4	Inlet Flange Slip Fit	14 ga crs	14 ga crs	14 ga crs	14 ga crs	14 ga crs	12 ga hrpo	12 ga hrpo	12 ga hrpo	12 ga hrpo	12 ga hrpo
5	Inlet Support	12 ga hrpo	12 ga hrpo	12 ga hrpo	12 ga hrpo	12 ga hrpo	12 ga hrpo	12 ga hrpo	12 ga hrpo	12 ga hrpo	10 ga hrpo
6	Outlet Flanges	.19" x 2" x 2" angle	.19" x 2" x 2" angle	.19" x 2" x 2" angle	.19" x 2" x 2" angle	.19" x 2" x 2" angle	.19" x 2" x 2" angle	.19" x 2" x 2" angle	.19" x 2" x 2" angle	.19" x 2" x 2" angle	.19" x 2" x 2" angle
7	Drive Base Front	12 ga hrpo	12 ga hrpo	12 ga hrpo	12 ga hrpo	10 ga hrpo	10 ga hrpo	10 ga hrpo	7 ga hrpo	7 ga hrpo	7 ga hrpo
8	Drive Base Side	10 ga hrpo	10 ga hrpo	10 ga hrpo	10 ga hrpo	10 ga hrpo	10 ga hrpo	10 ga hrpo	7 ga hrpo	7 ga hrpo	7 ga hrpo
9	Weather Cover Top	16 ga crs	16 ga crs	16 ga crs	16 ga crs	16 ga crs	16 ga crs	16 ga crs	16 ga crs	16 ga crs	16 ga crs
10	Weather Cover Back	16 ga crs	16 ga crs	16 ga crs	16 ga crs	16 ga crs	16 ga crs	16 ga crs	16 ga crs	16 ga crs	16 ga crs
11	Weather Cover Door	16 ga crs	16 ga crs	16 ga crs	16 ga crs	16 ga crs	16 ga crs	16 ga crs	16 ga crs	16 ga crs	16 ga crs
12	Motor Base Plate	10 ga hrpo	10 ga hrpo	10 ga hrpo	10 ga hrpo	10 ga hrpo	10 ga hrpo	10 ga hrpo	7 ga hrpo	7 ga hrpo	7 ga hrpo
13	Bearing Base Plate	12 ga hrpo	12 ga hrpo	12 ga hrpo	12 ga hrpo	10 ga hrpo	10 ga hrpo	10 ga hrpo	7 ga hrpo	7 ga hrpo	7 ga hrpo
14	Access Door	14 ga crs	14 ga crs	14 ga crs	14 ga crs	14 ga crs	14 ga crs	14 ga crs	14 ga crs	14 ga crs	14 ga crs
15	WHEEL	10 ga. hrpo	10 ga. hrpo	10 ga. hrpo	10 ga. hrpo	10 ga. hrpo	10 ga. hrpo	7 ga. hrpo	7 ga. hrpo	7 ga. hrpo	7 ga. hrpo

Model / Size				A -Inlet connection	Qty	B -Pedestal Connection	Qty	C -Motor Plate	Qty	D- Weather Cover Top	Qty	F -Weather Cover Back	Qty	G - Motor Access Door	Qty	H - Housing Access Door	Qty
3012H	3012H	-	-	3/8" Bolts & Nuts	8	3/8" Bolts & Nuts	8	3/8" Bolts & Nuts	4	1/4" Screws	4	1/4" Screws	6	1/4" Screws	4	1/4" Bolts & Nuts	8
3013H	3013H	-	-														
3015H	3015H	8115SEH	8115SEH														
3016H	3016H	-	-														
3018H	3018H	8118SEH	8118SEH		12		12	1/2" Bolts & Nuts									
3020H	3020H	8120SEH	8120SEH														
3022H	3022H	8122SEH	8122SEH														
3024H	3024H	8124SEH	8124SEH														
3027H	3027H	8127SEH	8127SEH														
3030H	3030H	8130SEH	8130SEH														

Notes:
a. This rooftop exhaust fan has been designed to comply with the 2014 Florida Building Code, TAS 201-94, TAS 202-94 & TAS 203-94.
b. Roof structure must be designed to withstand the weight and loading transmitted by this rooftop exhaust fan.
c. This approval is for the structural capacity of the exterior housing only, it does not include any interior mechanism and/or electrical part.
d. This rooftop exhaust fan has not been tested for wind driven rain according to Florida Building Code, TAS 100(A).
e. All fasteners must be corrosion resistant.

1. "CRS" is an acronym for "cold rolled steel".
2. "HRPO" is an acronym for "hot rolled, pickled, and oiled".
3. Item 7, 8(2) and 13 make the pedestal weldment.
4. Items 1, 2 and 6 make the housing weldment.
5. All pieces made of steel are painted using baked enamel.
6. In table above, line 15 gives material of backplate, the major structural component of wheel.

8100 & 3000 SERIES
SIZES: 3012-3030
SIZES: 8115-8130

Large Missile Impact Resistant
Max rated design pressure: +53.0/ -112.0 PSF

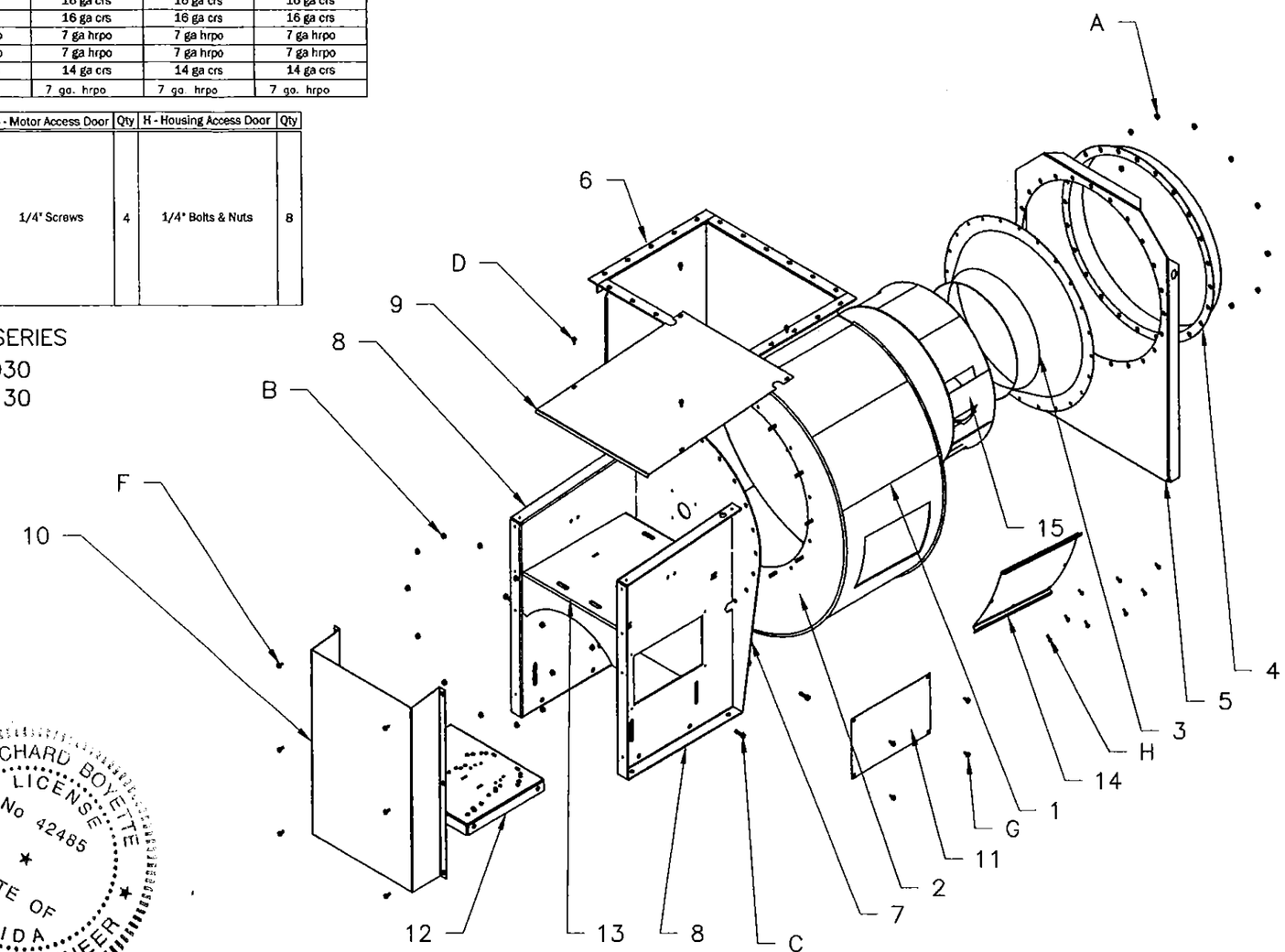

PRODUCT REVISED
as complying with the Florida Building Code
Acceptance No 15-0706.08
Expiration Date 02/21/2018
By
Miami Dade Product Control

APPROVED JUN 0 2 2015

Richard Boyette, FL PE #42485
Rick Boyette Consulting Inc - CoA #9707
4031 Coconut Blvd
Royal Palm Beach FL 33411
561-790-5766

RICHARD BOYETTE LICENSE No 42485 STATE OF FLORIDA PROFESSIONAL ENGINEER

DWG NO. 646020	Sheet 7/8
TITLE QBR, 3000, 8100 ROOFTOP FANS	
MAT'L	
DRAFTER BPF	DATE 6/9/11
DESIGN ENG. TCR 6/9/11	RELEASED
CHKD BY / MFG.	SCALE NTS

LET.	REVISION RECORD	BY	CKD.	DATE
A	Revisions per Miami-Dade	BPF	TCR	2/27/12
B	Revision to sheet 6 line 12 per Miami Dade.	TCR	TGB	1/24/13
C	Revisions to sheet 5 concerning isolators.	TCR	TGB	8/5/14
D	REVISED FOR FBC 2014	TCR	TGB	6/2/15

Acme Engineering & Manufacturing Corp.
1820 N. York Street
Muskogee, OK 74403
918-682-7791

Model/ Size				A -Inlet connection	Qty	B -Pedestal Connection	Qty	C -Drive Base	Qty	D -Motor Plate	Qty	F -Weather Cover Top	Qty	G -Weather Cover Back	Qty	H -Weather Cover Side	Qty	J -Access Door	Qty	K - Drive Base Angle	Qty	L -Housing Base Angle	Qty	M- Connecting Strip	Qty
3033H	3033SEH	8133H	8133SEH	3/8" Bolts & Nuts	12	3/8" Bolts & Nuts	12	1/2" Bolts & Nuts	10	1/2" Bolts & Nuts	4	1/4" Screws	6	1/4" Screws	6	1/4" Screws	22	1/4" Bolts & Nuts	8	3/8" Bolts & Nuts	8	3/8" Bolts & Nuts	2	3/8" Bolts & Nuts	8
3037H	3037SEH	8137H	8137SEH																						

3000 & 8100 SERIES - PARTS AND MATERIALS

#	Component	Model	
		3033, 8133	3037, 8137
1	Housing Center	14 ga crs	14 ga crs
2	Housing Side	12 ga hrpo	12 ga hrpo
3	Inlet	12 ga hrpo	12 ga hrpo
4	Inlet Flange Slip Fit	12 ga hrpo	12 ga hrpo
5	Inlet Support	10 ga hrpo	10 ga hrpo
6	Outlet Flanges	.19" x 2" x 2" angle	.19" x 2" x 2" angle
7	Drive Base Base Front	7 ga hrpo	7 ga hrpo
8	Drive Base Base Rear	7 ga hrpo	7 ga hrpo
9	Drive Base Angle	.25" x 3" x 3" angle	.25" x 3" x 3" angle
10	Weather Cover Top	16 ga crs	16 ga crs
11	Weather Cover Rear	16 ga crs	16 ga crs
12	Weather Cover Side	16 ga crs	16 ga crs
13	Connecting Strip	12 ga hrpo	12 ga hrpo
14	Housing Base Angle	.25" x 3" x 3" angle	.25" x 3" x 3" angle
15	Motor Base Plate	7 ga hrpo	7 ga hrpo
16	Bearing Base Plate	7 ga hrpo	7 ga hrpo
17	Drive Side Support Assembly	10 ga hrpo	10 ga hrpo
18	Access Door	14 ga crs	14 ga crs
19	WHEEL	7 go. hrpo	7 go. hrpo

Notes:
a. This rooftop exhaust fan has been designed to comply with the 2014 Florida Building Code, TAS 201–94, TAS 202–94 & TAS 203–94.
b. Roof structure must be designed to withstand the weight and loading transmitted by this rooftop exhaust fan.
c. This approval is for the structural capacity of the exterior housing only, it does not include any interior mechanism and/or electrical part.
d. This rooftop exhaust fan has not been tested for wind driven rain according to Florida Building Code, TAS 100(A).
e. All fasteners must be corrosion resistant.

Large Missile Impact Resistant
Max rated design pressure : +53.0 / −112.0 PSF

1. "CRS" is an acronym for "cold rolled steel".
2. "HRPO" is an acronym for "hot rolled, pickled, and oiled" steel.
3. Items 1, 2, and 6 make the housing weldment.
4. Item 17 (drive side support assembly) is a weldment.
5. All pieces made of steel are painted using baked enamel.
6. In table above, line 19 gives material of backplate, the major structural component of wheel.

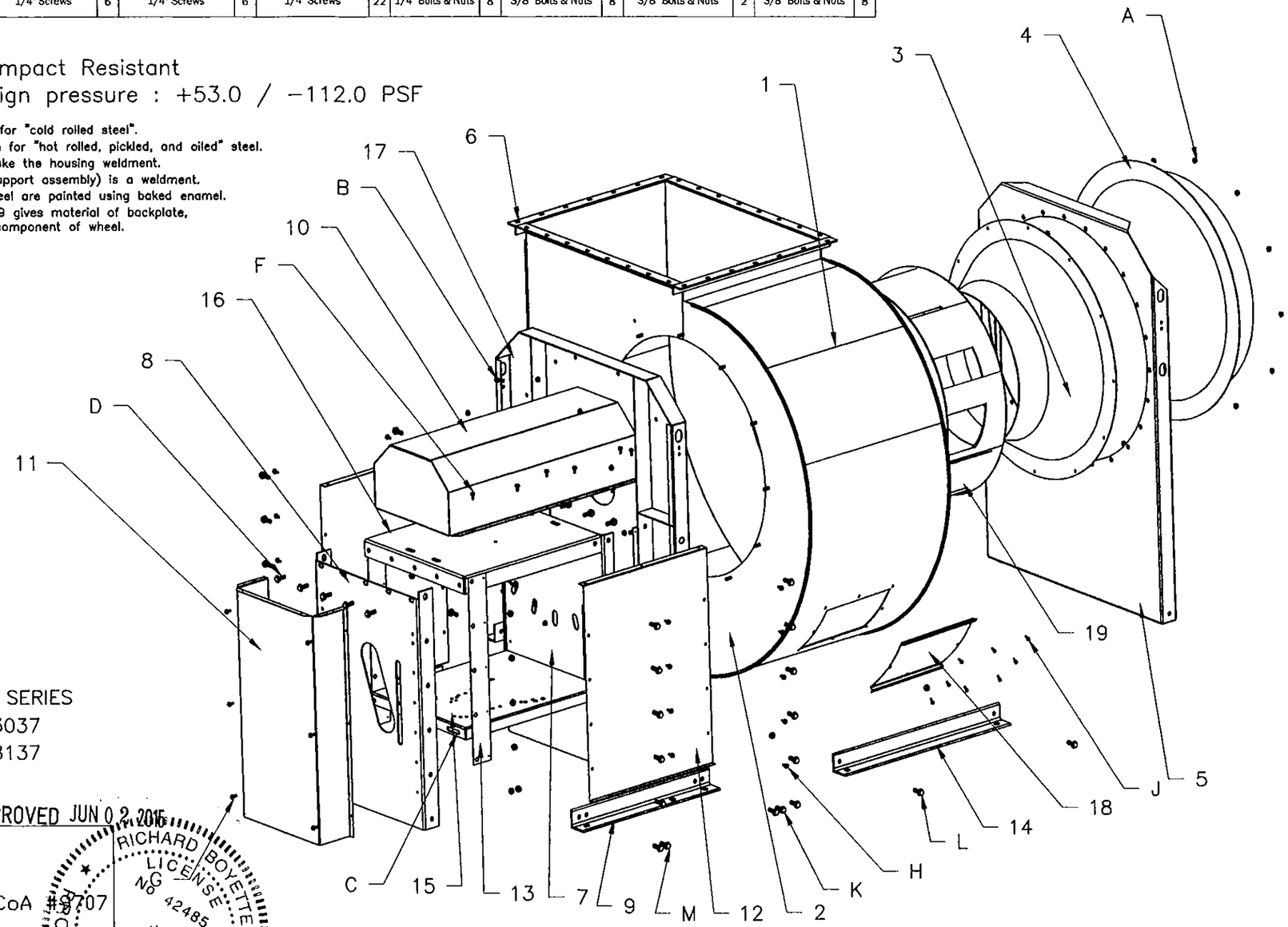

8100 & 3000 SERIES
SIZES: 3033–3037
SIZES: 8133–8137

PRODUCT REVISED
as complying with the Florida Building Code
Acceptance No 15-0706.08
Expiration Date 02/21/2018
By
Miami Dade Product Control

APPROVED JUN 02 2015

Richard Boyette, FL PE #42485
Rick Boyette Consulting Inc - CoA #8707
4031 Coconut Blvd
Royal Palm Beach FL 33411
561-790-5766

RICHARD BOYETTE LICENSE No 42485 STATE OF FLORIDA PROFESSIONAL ENGINEER

DWG NO. 646020	Sheet 8/8
TITLE QBR, 3000, 8100 ROOFTOP FANS	
MAT'L	
DRAFTER BPS	DATE 5/19/11
DESIGN ENG. TCR 5/19/11	RELEASED
CHKD BY / MFG.	SCALE NTS

LET.	REVISION RECORD	BY	CKD.	DATE
A	Revisions per Miami–Dade	BPF	TCR	2/27/12
B	Revision to sheet 6 line 12 per Miami Dade.	TCR	TGB	1/24/13
C	Revisions to sheet 5 concerning isolators.	TCR	TGB	8/5/14
D	REVISED FOR FBC 2014	TCR	TGB	6/2/15

Acme Engineering & Manufacturing Corp.
1820 N. York Street
Muskogee, OK 74403
918-682-7791