MIAMI-DADE COUNTY
DEPARTMENT OF REGULATORY AND ECONOMIC RESOURCES (RER)
BOARD AND CODE ADMINISTRATION DIVISION

MIAMI-DADE COUNTY
PRODUCT CONTROL SECTION
11805 SW 26 Street, Room 208
T (786) 315-2590 F (786) 315-2599
www.miamidade.gov/economy

# NOTICE OF ACCEPTANCE (NOA)

**WinDoor, Inc.**
**7500 Amsterdam Drive**
**Orlando, FL 32832**

**SCOPE:**

This NOA is being issued under the applicable rules and regulations governing the use of construction materials. The documentation submitted has been reviewed and accepted by Miami-Dade County RER - Product Control Section to be used in Miami Dade County and other areas where allowed by the Authority Having Jurisdiction (AHJ).

This NOA shall not be valid after the expiration date stated below. The Miami-Dade County Product Control Section (In Miami-Dade County) and/or the AHJ (in areas other than Miami-Dade County) reserve the right to have this product or material tested for quality assurance purposes. If this product or material fails to perform in the accepted manner, the manufacturer will incur the expense of such testing and the AHJ may immediately revoke, modify, or suspend the use of such product or material within their jurisdiction. RER reserves the right to revoke this acceptance, if it is determined by Miami–Dade County Product Control Section that this product or material fails to meet the requirements of the applicable building code.

This product is approved as described herein, and has been designed to comply with the Florida Building Code, including the High Velocity Hurricane Zone.

**DESCRIPTION: Series "4030-HVHZ w/Single Hung Window" Aluminum Window Wall System – S.M.I.**

**APPROVAL DOCUMENT:** Drawing No. **08-02139**, titled "4030 Aluminum Window Wall - Small Missile Impact - HVHZ", sheets 1 through 9 of 9, dated 07/17/13, with revision B dated 07/07/15, prepared by manufacturer, signed and sealed by Luis R. Lomas, P.E., bearing the Miami-Dade County Product Control Revision stamp with the Notice of Acceptance number and expiration date by the Miami-Dade County Product Control Section.

**MISSILE IMPACT RATING: Small Missile Impact Resistant**

**LABELING:** Each unit shall bear a permanent label with the manufacturer's name or logo, city, state, model/series, and following statement: "Miami-Dade County Product Control Approved", unless otherwise noted herein.

**RENEWAL** of this NOA shall be considered after a renewal application has been filed and there has been no change in the applicable building code negatively affecting the performance of this product.

**TERMINATION** of this NOA will occur after the expiration date or if there has been a revision or change in the materials, use, and/or manufacture of the product or process. Misuse of this NOA as an endorsement of any product, for sales, advertising or any other purposes shall automatically terminate this NOA. Failure to comply with any section of this NOA shall be cause for termination and removal of NOA.

**ADVERTISEMENT:** The NOA number preceded by the words Miami-Dade County, Florida, and followed by the expiration date may be displayed in advertising literature. If any portion of the NOA is displayed, then it shall be done in its entirety.

**INSPECTION:** A copy of this entire NOA shall be provided to the user by the manufacturer or its distributors and shall be available for inspection at the job site at the request of the Building Official.

This NOA **revises NOA# 13-0815.07** and consists of this page 1 and evidence pages E-1 and E-2, as well as approval document mentioned above.

The submitted documentation was reviewed by **Manuel Perez, P.E.**

MIAMI-DADE COUNTY APPROVED

6/30/16

**WinDoor, Inc.**

## NOTICE OF ACCEPTANCE: EVIDENCE SUBMITTED

**A. DRAWINGS**

1. Manufacturer's die drawings and sections.
   ***(Submitted under previous NOA No. 13-0815.07)***
2. Drawing No. **08-02139**, titled "4030 Aluminum Window Wall - Small Missile Impact - HVHZ", sheets 1 through 9 of 9, dated 07/17/13, with revision B dated 07/07/15, prepared by manufacturer, signed and sealed by Luis R. Lomas, P.E.

**B. TESTS**

1. Test reports on: 1) Air Infiltration Test, per FBC, TAS 202-94
   2) Uniform Static Air Pressure Test, Loading per FBC, TAS 202-94
   3) Water Resistance Test, per FBC, TAS 202-94
   4) Small Missile Impact Test per FBC, TAS 201-94
   5) Cyclic Wind Pressure Loading per FBC, TAS 203-94
   6) Forced Entry Test, per FBC 2411.3.2.1, and TAS 202-94

   along with marked-up drawings and installation diagram of an aluminum window wall system w/single hung window, prepared by National Certified Testing Laboratories, Inc., Test Report No. **NCTL-210-3869-2A**, dated 03/25/13, signed and sealed by Gerald J. Ferrara, P.E.
   ***(Submitted under previous NOA No. 13-0815.07)***

**C. CALCULATIONS**

1. Anchor verification calculations and structural analysis, complying with **FBC-5th Edition (2014)**, dated 06/09/15, prepared, signed and sealed by Luis R. Lomas, P.E.
2. Glazing complies with **ASTM E1300-04/09**

**D. QUALITY ASSURANCE**

1. Miami-Dade Department of Regulatory and Economic Resources (RER).

**E. MATERIAL CERTIFICATIONS**

1. Notice of Acceptance No. **14-0916.11** issued to **Kuraray America, Inc.** for their **"SentryGlas® (Clear and White) Glass Interlayers"** dated 06/25/15, expiring on 07/04/18.

**Manuel Perez, P.E.**
**Product Control Examiner**
**NOA No. 15-0715.07**
**Expiration Date: April 03, 2019**
**Approval Date: July 07, 2016**

## NOTICE OF ACCEPTANCE: EVIDENCE SUBMITTED

**F. STATEMENTS**

1. Statement letter of conformance, complying with **FBC-5th Edition (2014)**, and of no financial interest, dated June 9, 2015, issued, signed and sealed by Luis R. Lomas, P.E.
2. Laboratory compliance letter for Test Report No. **NCTL-210-3869-2A**, issued by National Certified Testing Laboratories, Inc., dated 03/25/13, signed and sealed by Gerard J. Ferrara, P.E.

**G. OTHERS**

1. Notice of Acceptance No. **13-0815.07**, issued to WinDoor, Inc. for their Series "4030-HVHZ" Aluminum Window Wall Window System w/Single Hung Window - S.M.I. approved on 04/03/14 and expiring on 04/03/19.

**Manuel Perez, P.E.**
**Product Control Examiner**
**NOA No. 15-0715.07**
**Expiration Date: April 03, 2019**
**Approval Date: July 07, 2016**

NOTES:

1. THE PRODUCT SHOWN HEREIN IS DESIGNED AND MANUFACTURED TO COMPLY WITH REQUIREMENTS OF THE 2014 FLORIDA BUILDING CODE 5th. EDITION INCLUDING THE HVHZ.
2. WOOD FRAMING AND MASONRY OPENING TO BE DESIGNED AND ANCHORED TO PROPERLY TRANSFER ALL LOADS TO STRUCTURE. FRAMING AND MASONRY OPENING IS THE RESPONSIBILITY OF THE ARCHITECT OR ENGINEER OF RECORD.
3. 1X BUCK OVER MASONRY/CONCRETE IS OPTIONAL. WHERE 1X BUCK IS NOT USED DISSIMILAR MATERIALS MUST BE SEPARATED WITH APPROVED COATING OR MEMBRANE. SELECTION OF COATING OR MEMBRANE IS THE RESPONSIBILITY OF THE ARCHITECT OR ENGINEER OF RECORD.
4. ALLOWABLE STRESS INCREASE OF 1/3 WAS NOT USED IN THE DESIGN OF THE PRODUCT SHOWN HEREIN. WIND LOAD DURATION FACTOR Cd=1.6 WAS USED FOR WOOD ANCHOR CALCULATIONS (WOOD TO WOOD ONLY PER NDS 2005).
5. FRAME MATERIAL: ALUMINUM 6063-T6
6. UNITS MUST BE GLAZED PER ASTM E1300-04/09, SEE SHEET 3 FOR GLASS DETAILS.
7. APPROVED IMPACT PROTECTIVE SYSTEM <u>IS NOT REQUIRED</u> FOR THIS PRODUCT IN WIND BORNE DEBRIS REGIONS. WHEN INSTALLED ABOVE 35FT OF HEIGHT.
8. SHIM AS REQUIRED AT EACH INSTALLATION ANCHOR WITH LOAD BEARING SHIM. SHIM WHERE SPACE OF 1/16" OR GREATER OCCURS. MAXIMUM ALLOWABLE SHIM STACK TO BE 1/4".
9. FOR ANCHORING INTO WOOD FRAMING OR 2X BUCK USE #14 CUT-THREAD WOOD SCREWS WITH SUFFICIENT LENGTH TO ACHIEVE A 1 7/16" MINIMUM EMBEDMENT INTO SUBSTRATE. LOCATE ANCHORS AS SHOWN IN ELEVATIONS AND INSTALLATION DETAILS.
10. FOR ANCHORING INTO MASONRY/CONCRETE USE 1/4" ELCO CRETE-FLEX TAPCONS WITH SUFFICIENT LENGTH TO ACHIEVE A 1 1/4" MINIMUM EMBEDMENT INTO SUBSTRATE WITH 2 1/2" MINIMUM EDGE DISTANCE. LOCATE ANCHORS AS SHOWN IN ELEVATIONS AND INSTALLATION DETAILS.
11. FOR ANCHORING INTO METAL STRUCTURE USE ALL #14 GRADE 5 SMS OR SELF DRILLING SCREWS WITH SUFFICIENT LENGTH TO ACHIEVE 3 THREADS MINIMUM BEYOND STRUCTURE INTERIOR WALL. LOCATE ANCHORS AS SHOWN IN ELEVATIONS AND INSTALLATION DETAILS.
12. FOR ANCHORING INTO ALUMINUM STRUCTURE USE ALL #14 GRADE 5 SMS OR SELF DRILLING SCREWS WITH SUFFICIENT LENGTH TO ACHIEVE 3 THREADS MINIMUM BEYOND STRUCTURE INTERIOR WALL. LOCATE ANCHORS AS SHOWN IN ELEVATIONS AND INSTALLATION DETAILS.
13. ALL FASTENERS TO BE CORROSION RESISTANT.
14. INSTALLATION ANCHORS SHALL BE INSTALLED IN ACCORDANCE WITH ANCHOR MANUFACTURER'S INSTALLATION INSTRUCTIONS AND ANCHORS SHALL NOT BE USED IN SUBSTRATES WITH STRENGTHS LESS THAN THE MINIMUM STRENGTH SPECIFIED BELOW:
    A. WOOD - MINIMUM SPECIFIC GRAVITY OF G=0.42
    B. CONCRETE - MINIMUM COMPRESSIVE STRENGTH OF 3,192 PSI.
    C. MASONRY - STRENGTH CONFORMANCE TO ASTM C-90-11b, NORMAL WEIGHT WITH MINIMUM 1,900 PSI STRENGTH, MORTAR "N" PER ASTM C270-12, ASTM C1384-06a AND ASTM C1714-10, , GRADE N, TYPE 1 (OR GREATER).
    D. METAL STRUCTURE: STEEL 16GA, (.0635" OR 63.5MIL) PER AISC & AISI 33KSI OR ALUMINUM 6063-T5 1/8" THICK MINIMUM

| REVISIONS | | | |
|---|---|---|---|
| REV | DESCRIPTION | DATE | APPROVED |
| A | REVISED PER MD. COMMENTS | 02/20/14 | R.L. |
| B | REVISED PER NEW STANDARDS | 07/07/15 | R.L. |

TABLE OF CONTENTS


| SHEET NO. | DESCRIPTION |
|---|---|
| 1 | NOTES |
| 2 | ELEVATIONS |
| 3 - 4 | CROSS SECTIONS |
| 5 - 8 | INSTALLATION DETAILS |
| 9 | COMPONENTS |


PRODUCT REVISED
as complying with the Florida
Building Code
Acceptance No 15-0715.07
Expiration Date Apr. 13, 2019
By Manuel Perez
Miami/Dade Product Control

SIGNED: 06/22/2016


WinDoor INCORPORATED
7500 AMSTERDAM DRIVE
ORLANDO, FL 32832
Phone: 407.481.8400
Fax: 407.481.0505
www.windoorinc.com


4030 ALUMINUM WINDOW WALL
SMALL MISSILE IMPACT - HVHZ
NOTES

| DRAWN: | DWG NO. | REV |
|---|---|---|
| N.G. | 08-02139 | B |

| SCALE | DATE | SHEET |
|---|---|---|
| NTS | 07/17/13 | 1 OF 9 |

LUIS R. LOMAS
LICENSE
No. 62514
STATE OF FLORIDA
PROFESSIONAL ENGINEER

| REVISIONS | | | |
|---|---|---|---|
| REV | DESCRIPTION | DATE | APPROVED |
| A | REVISED PER MD. COMMENTS | 02/20/14 | R.L. |
| B | REVISED PER NEW STANDARDS | 07/07/15 | R.L. |

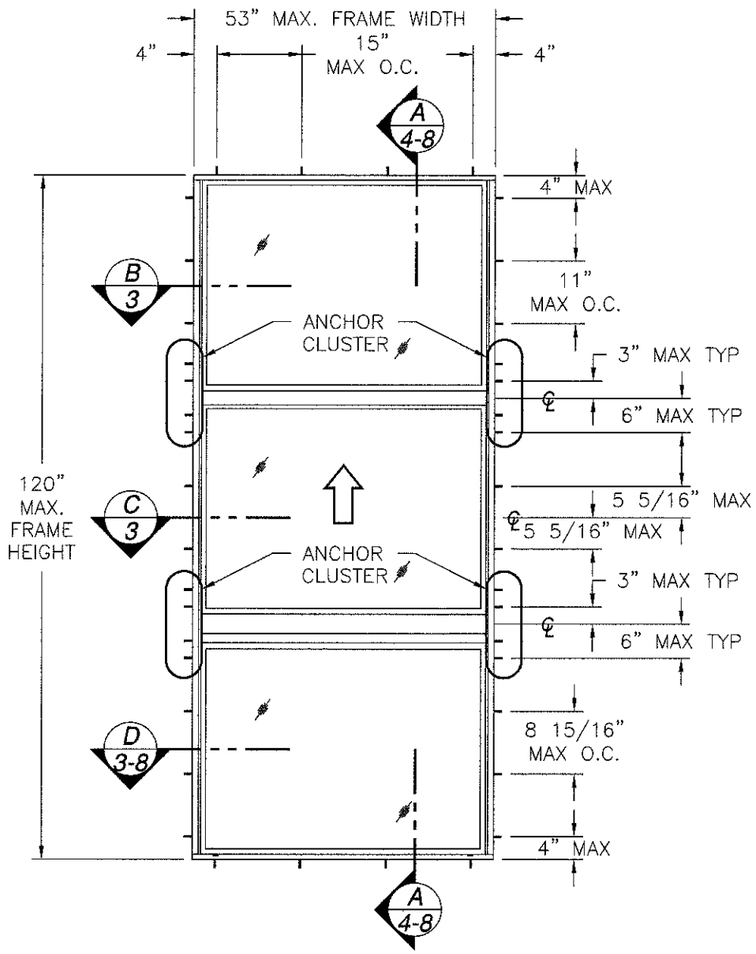


## 4030 ALUMINUM WINDOW WALL EQUAL LITE

EXTERIOR VIEW

| DESIGN PRESSURE RATING | IMPACT RATING |
|---|---|
| ±112.6PSF | SMALL MISSILE IMPACT |

MISSILE LEVEL D, WIND ZONE 4 AND HZHZ
FOR WOOD INSTALLATION

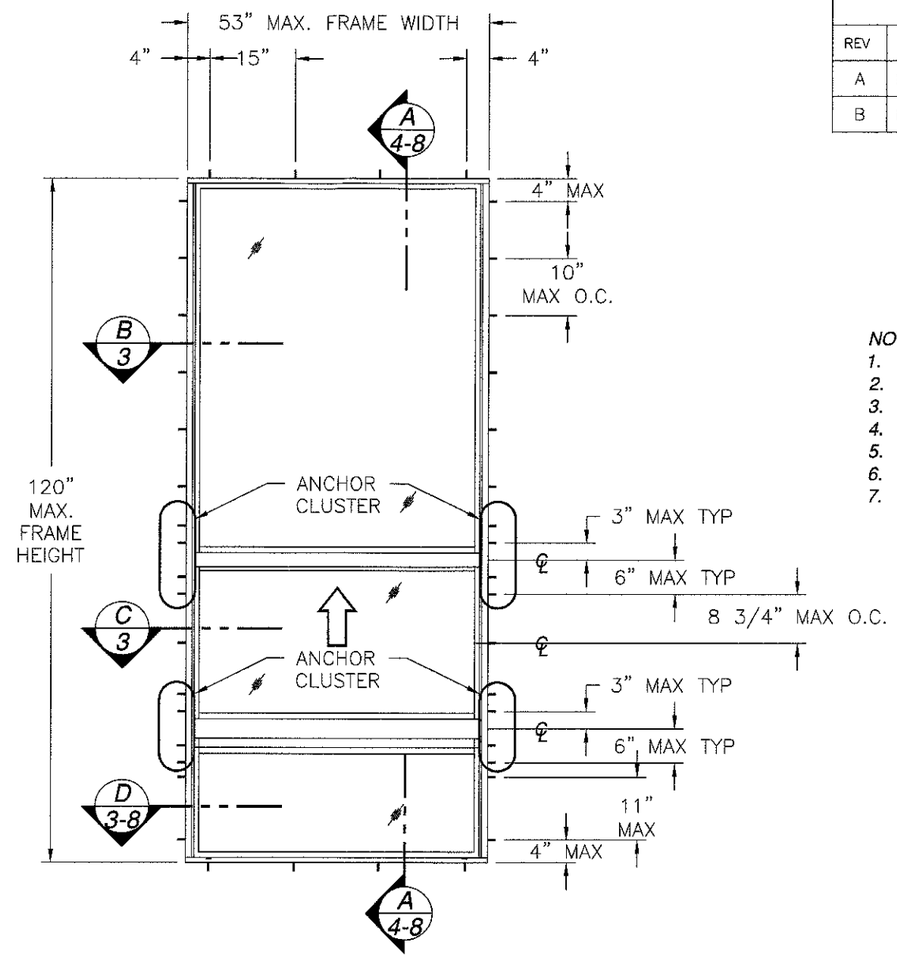


## 4030 ALUMINUM WINDOW WALL - ORIEL

EXTERIOR VIEW

| DESIGN PRESSURE RATING | IMPACT RATING |
|---|---|
| ±105.7PSF | SMALL MISSILE IMPACT |

MISSILE LEVEL D, WIND ZONE 4 AND HZHZ
FOR WOOD INSTALLATION

*NOTES:*

1. *EQUAL LITE SINGLE HUNG SASH DLO: 48 1/4" X 34 31/32"*
2. *EQUAL LITE SINGLE HUNG FIXED LITE DLO: 48 1/4" X 34 31/32"*
3. *EQUAL LITE FIXED LITE DLO: 48 1/4" X 35"*
4. *ORIEL SINGLE HUNG SASH DLO: 48 1/4" X 20 11/16"*
5. *ORIEL SINGLE HUNG FIXED LITE DLO: 48 1/4" X 64"*
6. *ORIEL FIXED LITE DLO: 48 1/4" X 20 5/16"*
7. *WEEP HOLES CUT OUTS ARE LOCATED AT EACH CORNER OF SILL FACE.*

| DESIGN PRESSURE RATING | IMPACT RATING |
|---|---|
| +120.0/-150.0PSF | SMALL MISSILE IMPACT |

MISSILE LEVEL D, WIND ZONE 4 AND HZHZ
FOR MASONRY/CONCRETE AND METAL INSTALLATION

SIGNED: 06/22/2016

PRODUCT REVISED
as complying with the Florida
Building Code 15-0715.07
Acceptance No
Expiration Date April 3, 2019
By Manuel Perez
Miami Dade Product Control


WinDoor INCORPORATED
7500 AMSTERDAM DRIVE
ORLANDO, FL 32832
Phone: 407.481.8400
Fax: 407.481.0505
www.windoorinc.com


4030 ALUMINUM WINDOW WALL
SMALL MISSILE IMPACT – HVHZ
ELEVATIONS

| DRAWN: | DWG NO. | REV |
|---|---|---|
| N.G. | 08-02139 | B |
| SCALE NTS | DATE 07/17/13 | SHEET 2 OF 9 |

LUIS R. LOMAS
LICENSE
No. 62514
STATE OF FLORIDA
PROFESSIONAL ENGINEER

## BILL OF MATERIALS

| ITEM NO.: | PART NUMBER | DESCRIPTION | MANUFACTURER | MATERIAL |
|---|---|---|---|---|
| 1 | FS-07419 | FRAME HEAD & SILL EQUAL LEG | KEYMARK | ALUMINUM 6063-T6 |
| 2 | FS-06614 | FRAME JAMB EQUAL LEG | KEYMARK | ALUMINUM 6063-T6 |
| 3 | FS-07418 | FRAME HEAD & SILL FLANGE | KEYMARK | ALUMINUM 6063-T6 |
| 4 | FS-06663 | FRAME JAMB FLANGE | KEYMARK | ALUMINUM 6063-T6 |
| 5 | FH-06615 | FIXED MEETING RAIL | KEYMARK | ALUMINUM 6063-T6 |
| 6 | FH-06616 | MEETING RAIL | KEYMARK | ALUMINUM 6063-T6 |
| 7 | FH-07734 | SASH BOTTOM RAIL | KEYMARK | ALUMINUM 6063-T6 |
| 8 | FS-06618 | SASH JAMB | KEYMARK | ALUMINUM 6063-T6 |
| 9 | FS-06671 | HEAD FILLER | KEYMARK | ALUMINUM 6063-T6 |
| 10 | FS-04501 | JAMB TRACK RECESSED COVER | KEYMARK | ALUMINUM 6063-T6 |
| 11 | FH-06669 | HORIZONTAL IMPOST | KEYMARK | ALUMINUM 6063-T6 |
| 12 | FH-07492 | FIXED MEETING RAIL REINFORCEMENT | KEYMARK | ALUMINUM 6063-T6 |
| 13 | FH-07493 | SASH MEETING RAIL REINFORCEMENT | KEYMARK | ALUMINUM 6063-T6 |
| 14 | FS-06667 | 7/16" GLASS STOP | KEYMARK | ALUMINUM 6063-T6 |
| 15 | FS-07353 | 1" GLASS STOP | KEYMARK | ALUMINUM 6063-T6 |
| 16 | | NOT USED | | |
| 17 | FS-07327 | SILL SNAP LOCK | KEYMARK | ALUMINUM 6063-T6 |
| 18 | H4000-BL-SL202 | SASH LOCK | SULLIVAN & ASSOC. | ALUMINUM 6063-T6 |
| 19 | | SPIRAL OR BLOCK & TACKLE BALANCES | CALDWELL | |
| 20 | S4000-XX-150 | SCREEN HEAD, JAMB & SILL | ROLLFORM | ALUMINUM 6063-T6 |
| 21 | S10010-BL-2200R | SCREEN SPLINE | TEAM PLASTICS | VINYL |
| 22 | SBV-XX-0600Z | SCREEN CLOTH | PHIFER | FIBERGLASS |
| 23 | 54080-ML-FB11 | SCREEN CORNER KEY | SEUAN | NYLON |
| 24 | 122003 | .187x.350 ULTRAFAB FINSEAL | ULTRAFAB | |
| 25 | W4000-BL-SCE42 | 1.3x1.75x.375 CLOSED CELL FOAM PAD | FRANK LOWE | NEOPRENE |
| 26 | 122001 | .187x.220 ULTRAFAB FINSEAL | ULTRAFAB | |
| 27 | 4000SH-BL-TP-110 | GLASS STOP VINYL | TEAM PLASTICS | VINYL |
| 28 | 131096 | #6x3/4" FH PHILLIPS SMS SCREW | | STAINLESS STEEL |
| 29 | 131014 | #8x1" SQ DRIVE PH SMS SCREW | | STAINLESS STEEL |
| 30 | 121104 | GLASS SHIM | FRANK LOWE | 85 DUROMETER |
| 31 | SIKA 553 | SEALANT | SIKA | URETHANE |
| 32 | | 3/8 SPACER | HELIMA | ALUMINUM AW3000FF |

| REVISIONS | | | |
|---|---|---|---|
| REV | DESCRIPTION | DATE | APPROVED |
| A | REVISED PER MD. COMMENTS | 02/20/14 | R.L. |
| B | REVISED PER NEW STANDARDS | 07/07/15 | R.L. |

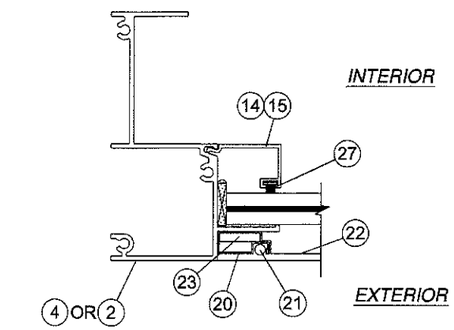


D/3 HORIZONTAL CROSS SECTION

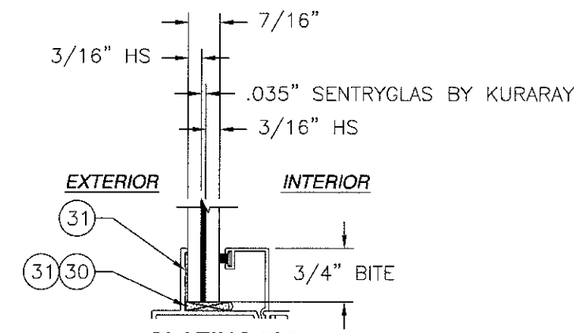


GLAZING "A"

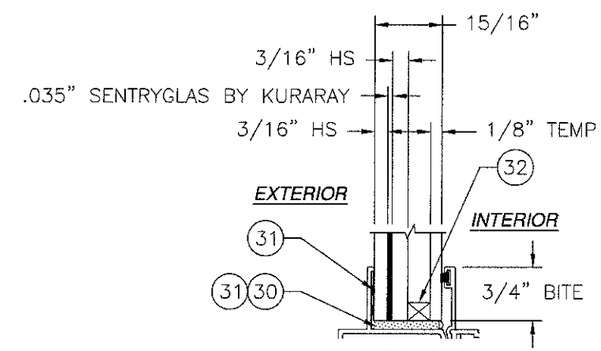


GLAZING "B"

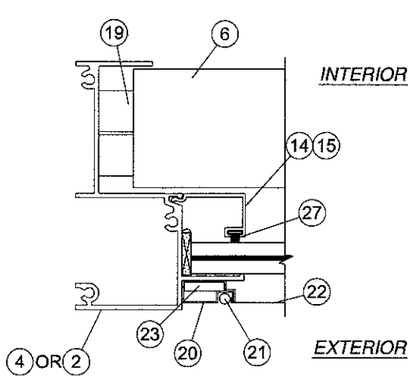


B/3 HORIZONTAL CROSS SECTION

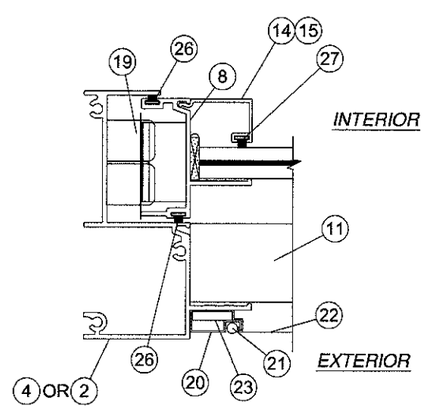


C/3 HORIZONTAL CROSS SECTION

SIGNED: 06/22/2016

PRODUCT REVISED
as complying with the Florida Building Code
Acceptance No 15-0715.07
Expiration Date April 3, 2019
By Manuel Perez
Miami-Dade Product Control


WinDoor INCORPORATED
7500 AMSTERDAM DRIVE
ORLANDO, FL 32832
Phone: 407.481.8400
Fax: 407.481.0505
www.windoorinc.com


4030 ALUMINUM WINDOW WALL
SMALL MISSILE IMPACT – HVHZ
B.O.M., CROSS SECTIONS & GLAZING DETAILS

LUIS R. LOMAS LICENSE No. 6251 STATE OF FLORIDA PROFESSIONAL ENGINEER

| DRAWN: | DWG NO. | REV |
|---|---|---|
| N.G. | 08-02139 | B |
| SCALE NTS | DATE 07/17/13 | SHEET 3 OF 9 |

| REVISIONS | | | |
|---|---|---|---|
| REV | DESCRIPTION | DATE | APPROVED |
| A | REVISED PER MD. COMMENTS | 02/20/14 | R.L. |
| B | REVISED PER NEW STANDARDS | 07/07/15 | R.L. |

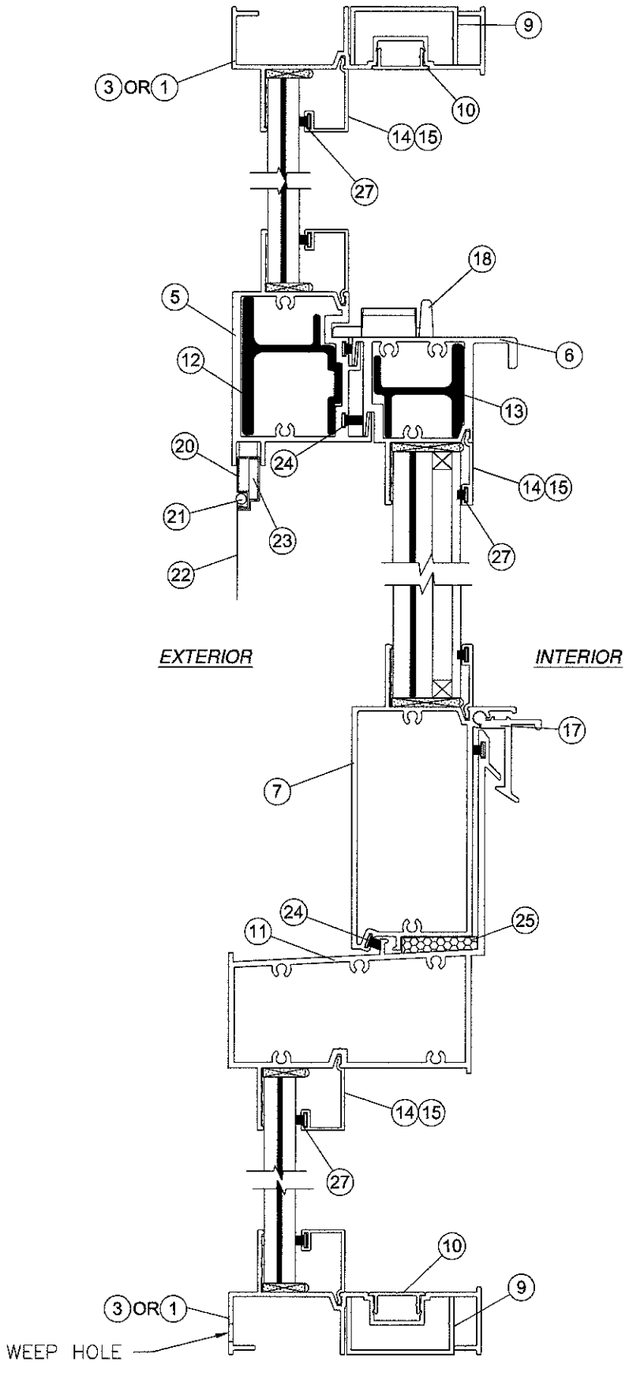


A/4 VERTICAL CROSS SECTION

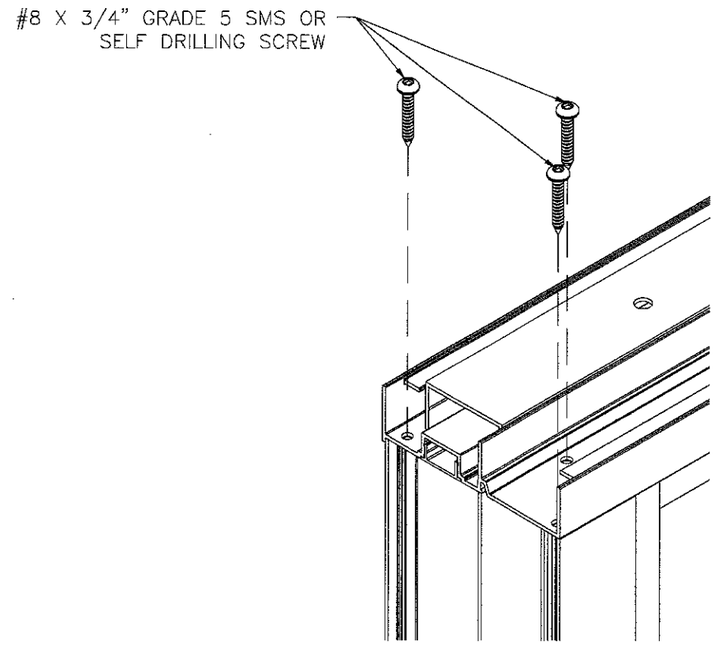


CORNER DETAIL

SIGNED: 06/22/2016

PRODUCT REVISED
as complying with the Florida
Building Code
Acceptance No 15-0715.07
Expiration Date April 3, 2019
By Manuel Perez
Miami-Dade Product Control

WinDoor INCORPORATED
7500 AMSTERDAM DRIVE
ORLANDO, FL 32832
Phone: 407.481.8400
Fax: 407.481.0505
www.windoorinc.com

4030 ALUMINUM WINDOW WALL
SMALL MISSILE IMPACT – HVHZ
VERTICAL CROSS SECTION

| DRAWN: N.G. | DWG NO. 08-02139 | REV B |
|---|---|---|
| SCALE NTS | DATE 07/17/13 | SHEET 4 OF 9 |

LUIS R. LOMAS
LICENSE No. 6251
STATE OF FLORIDA
PROFESSIONAL ENGINEER

| REVISIONS | | | |
|---|---|---|---|
| REV | DESCRIPTION | DATE | APPROVED |
| A | REVISED PER MD. COMMENTS | 02/20/14 | R.L. |
| B | REVISED PER NEW STANDARDS | 07/07/15 | R.L. |

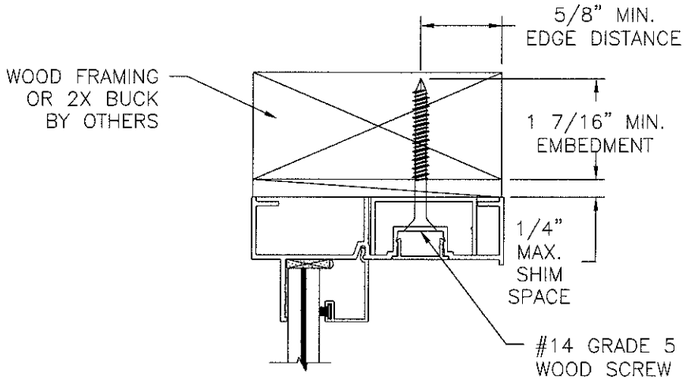


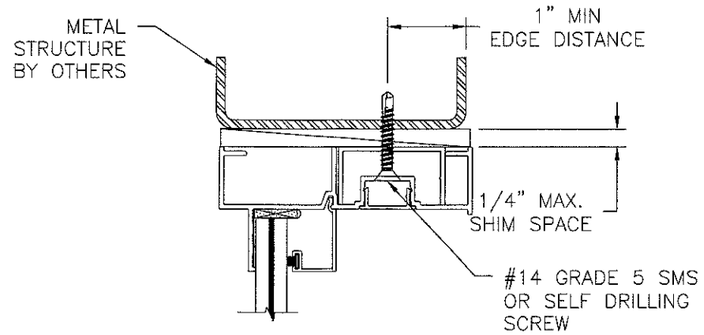


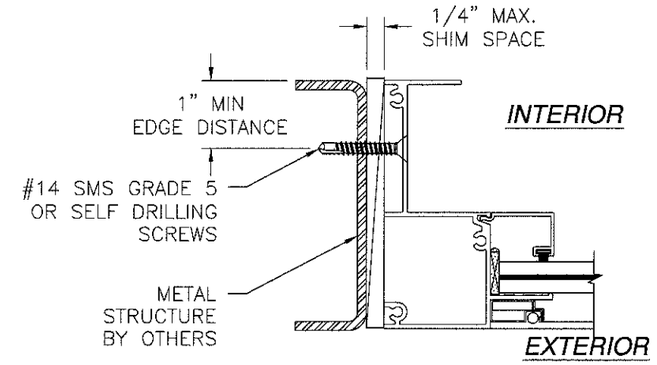


D/5 JAMB INSTALLATION DETAIL
METAL STRUCTURE INSTALLATION
FIXED WINDOW SHOWN OTHERS SIMILAR

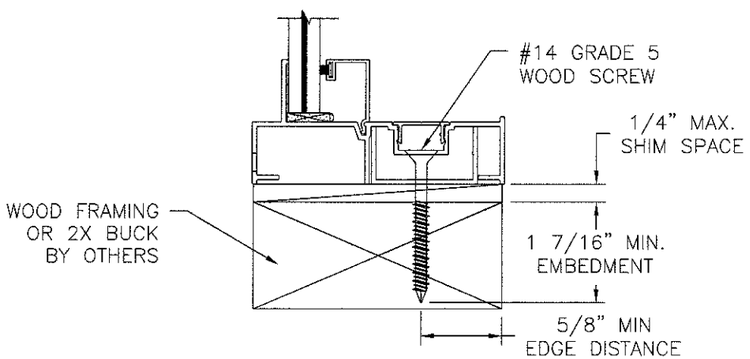


A/5 VERTICAL CROSS SECTION
WOOD FRAMING OR 2X BUCK INSTALLATION

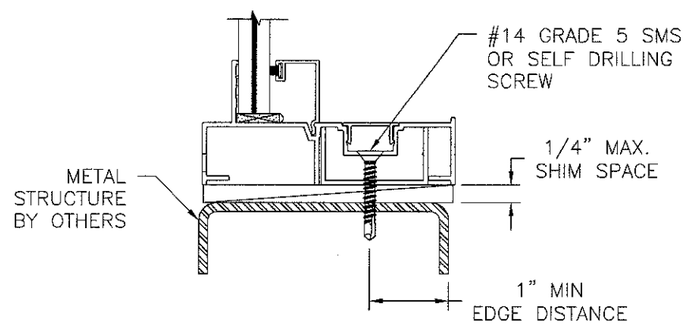


A/5 VERTICAL CROSS SECTION
METAL STRUCTURE INSTALLATION

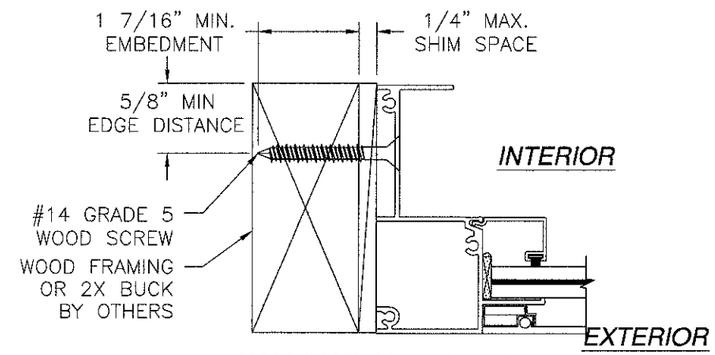


D/5 JAMB INSTALLATION DETAIL
WOOD FRAMING OR 2X BUCK INSTALLATION
FIXED WINDOW SHOWN OTHERS SIMILAR

SIGNED: 06/22/2016

NOTE:
1. INTERIOR AND EXTERIOR FINISHES, BY OTHERS, NOT SHOWN FOR CLARITY.
2. PERIMETER AND JOINT SEALANT BY OTHERS TO BE DESIGNED IN ACCORDANCE WITH ASTM E2112

PRODUCT REVISED
as complying with the Florida
Building Code
Acceptance No 15-0715.07
Expiration Date Apr 13, 2019
By Manuel Perez
Miami Dade Product Control


WinDoor INCORPORATED
7500 AMSTERDAM DRIVE
ORLANDO, FL 32832
Phone: 407.481.8400
Fax: 407.481.0505
www.windoorinc.com


4030 ALUMINUM WINDOW WALL
SMALL MISSILE IMPACT – HVHZ
INSTALLATION DETAILS

| DRAWN: | DWG NO. | REV |
|---|---|---|
| N.G. | 08-02139 | B |
| SCALE NTS | DATE 07/17/13 | SHEET 5 OF 9 |

LUIS R. LOMAS
LICENSE No. 6251
STATE OF FLORIDA
PROFESSIONAL ENGINEER

| REVISIONS | | | |
|---|---|---|---|
| REV | DESCRIPTION | DATE | APPROVED |
| A | REVISED PER MD. COMMENTS | 02/20/14 | R.L. |
| B | REVISED PER NEW STANDARDS | 07/07/15 | R.L. |

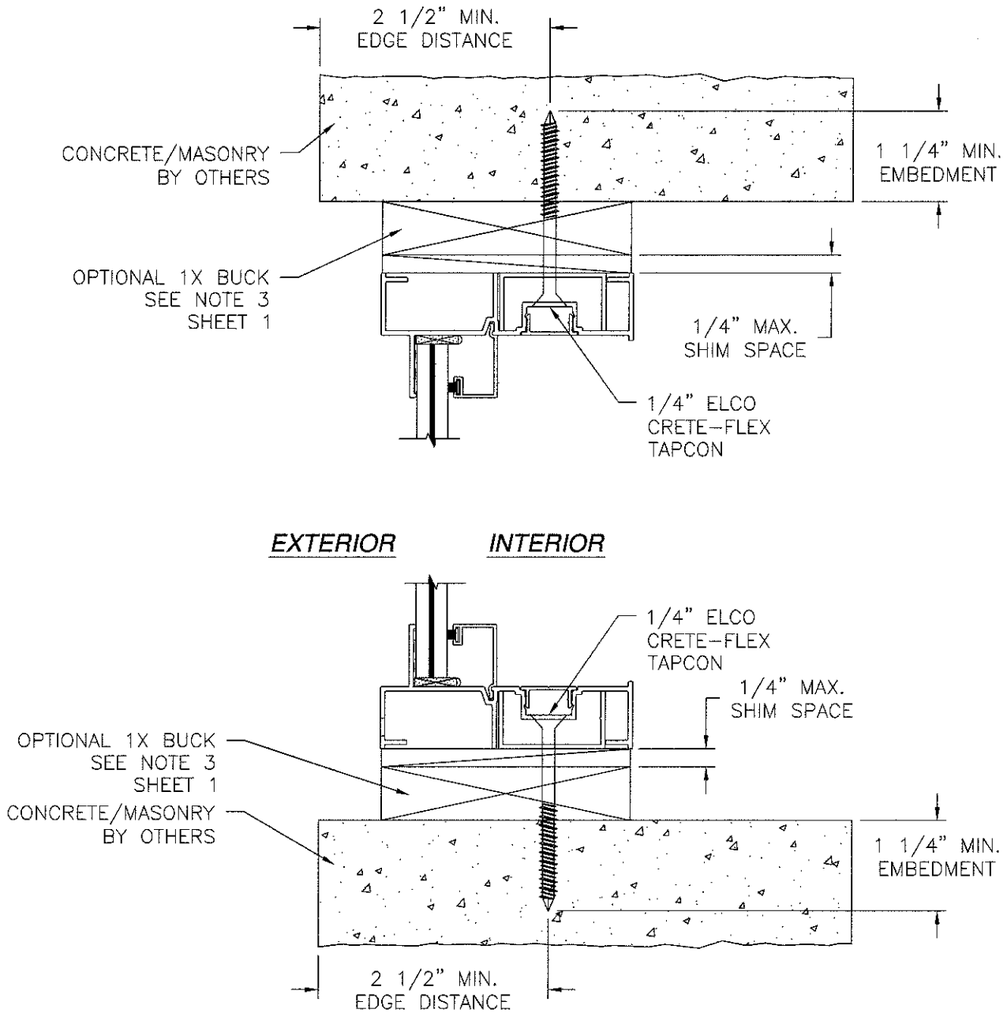


A/6 VERTICAL CROSS SECTION
CONCRETE/MASONRY INSTALLATION

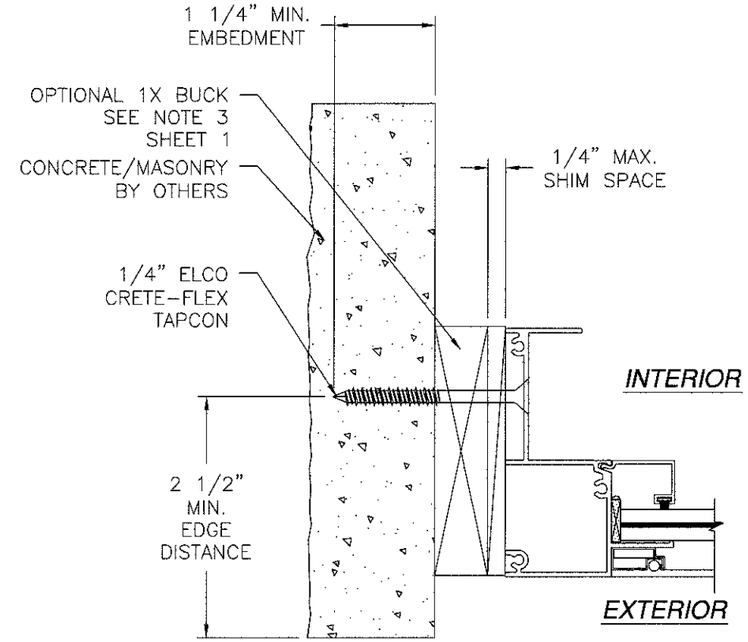


D/6 JAMB INSTALLATION DETAIL
CONCRETE/MASONRY INSTALLATION
FIXED WINDOW SHOWN OTHERS SIMILAR

SIGNED: 06/22/2016

NOTE:
1. INTERIOR AND EXTERIOR FINISHES, BY OTHERS, NOT SHOWN FOR CLARITY.
2. PERIMETER AND JOINT SEALANT BY OTHERS TO BE DESIGNED IN ACCORDANCE WITH ASTM E2112

PRODUCT REVISED
as complying with the Florida Building Code
Acceptance No 15-0715.07
Expiration Date Apr. 13, 2019
By Manuel Perez
Miami Dade Product Control


WinDoor INCORPORATED
7500 AMSTERDAM DRIVE
ORLANDO, FL 32832
Phone: 407.481.8400
Fax: 407.481.0505
www.windoorinc.com


4030 ALUMINUM WINDOW WALL
SMALL MISSILE IMPACT - HVHZ
INSTALLATION DETAILS

| DRAWN: | DWG NO. | REV |
|---|---|---|
| N.G. | 08-02139 | B |
| SCALE NTS | DATE 07/17/13 | SHEET 6 OF 9 |

LUIS R. LOMAS
LICENSE
No. 6251
STATE OF FLORIDA
PROFESSIONAL ENGINEER

| REVISIONS | | | |
|---|---|---|---|
| REV | DESCRIPTION | DATE | APPROVED |
| A | REVISED PER MD. COMMENTS | 02/20/14 | R.L. |
| B | REVISED PER NEW STANDARDS | 07/07/15 | R.L. |

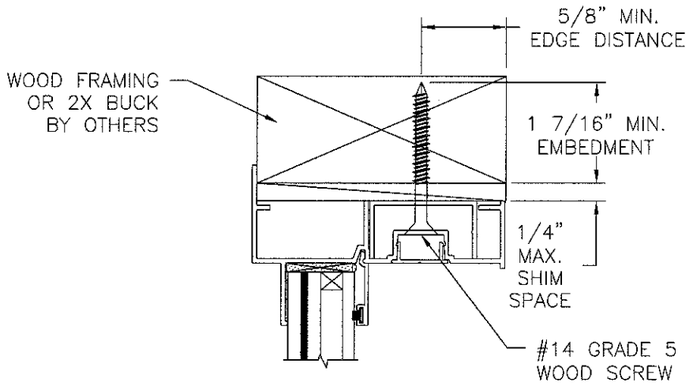


A/7 VERTICAL CROSS SECTION
WOOD FRAMING OR 2X BUCK INSTALLATION

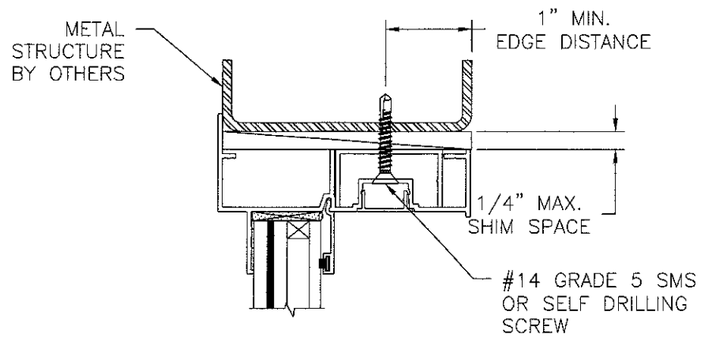


A/7 VERTICAL CROSS SECTION
METAL STRUCTURE INSTALLATION

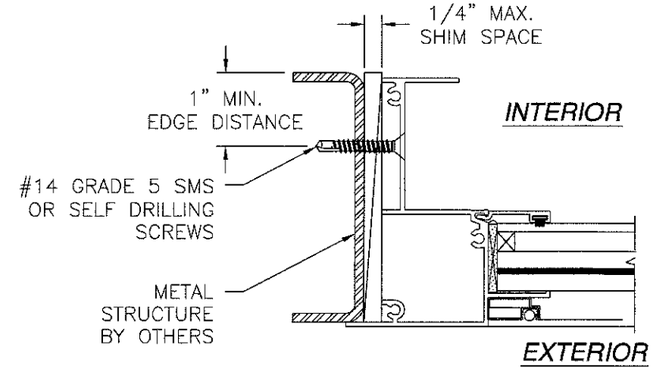


D/7 JAMB INSTALLATION DETAIL
METAL STRUCTURE INSTALLATION
FIXED WINDOW SHOWN OTHERS SIMILAR

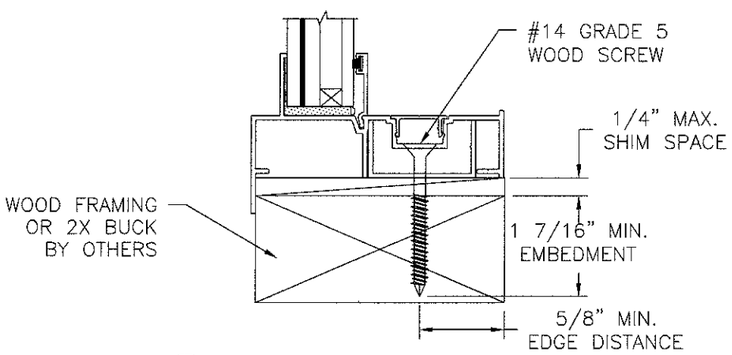


A/7 VERTICAL CROSS SECTION
WOOD FRAMING OR 2X BUCK INSTALLATION

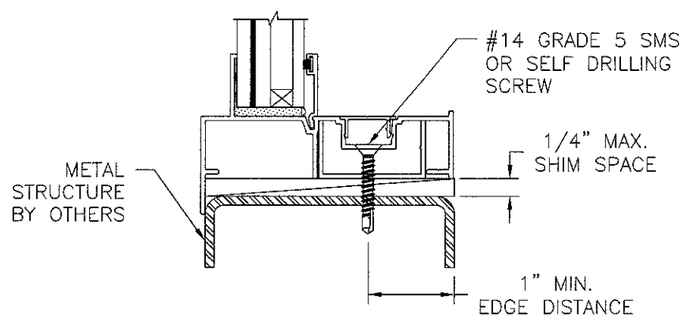


A/7 VERTICAL CROSS SECTION
METAL STRUCTURE INSTALLATION

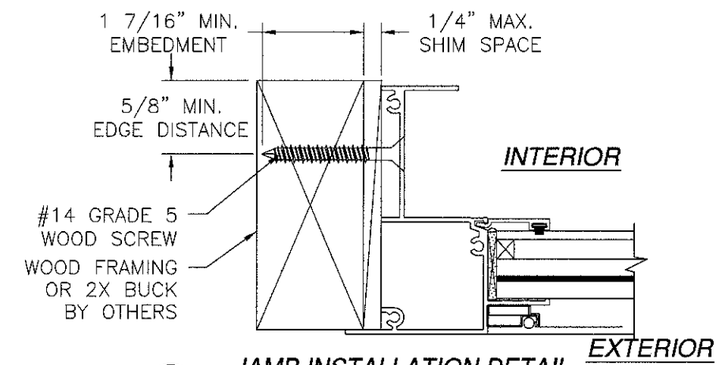


D/7 JAMB INSTALLATION DETAIL
WOOD FRAMING OR 2X BUCK INSTALLATION
FIXED WINDOW SHOWN OTHERS SIMILAR

SIGNED: 06/22/2016

NOTE:
1. INTERIOR AND EXTERIOR FINISHES, BY OTHERS, NOT SHOWN FOR CLARITY.
2. PERIMETER AND JOINT SEALANT BY OTHERS TO BE DESIGNED IN ACCORDANCE WITH ASTM E2112

PRODUCT REVISED
as complying with the Florida
Building Code
Acceptance No 15-0715.07
Expiration Date April 3, 2019
By Manuel Perez
Miami Dade Product Control


WinDoor INCORPORATED
7500 B AMSTERDAM DRIVE
ORLANDO, FL 32832
Phone: 407.481.8400
Fax: 407.481.0505
www.windoorinc.com


4030 ALUMINUM WINDOW WALL
SMALL MISSILE IMPACT – HVHZ
FLANGE INSTALLATION DETAILS

| DRAWN: | DWG NO. | REV |
|---|---|---|
| N.G. | 08-02139 | B |
| SCALE NTS / DATE 07/17/13 | SHEET 7 OF 9 | |

LUIS R. LOMAS
LICENSE
No. 52514
STATE OF FLORIDA
PROFESSIONAL ENGINEER

| REVISIONS | | | |
|---|---|---|---|
| REV | DESCRIPTION | DATE | APPROVED |
| A | REVISED PER MD. COMMENTS | 02/20/14 | R.L. |
| B | REVISED PER NEW STANDARDS | 07/07/15 | R.L. |

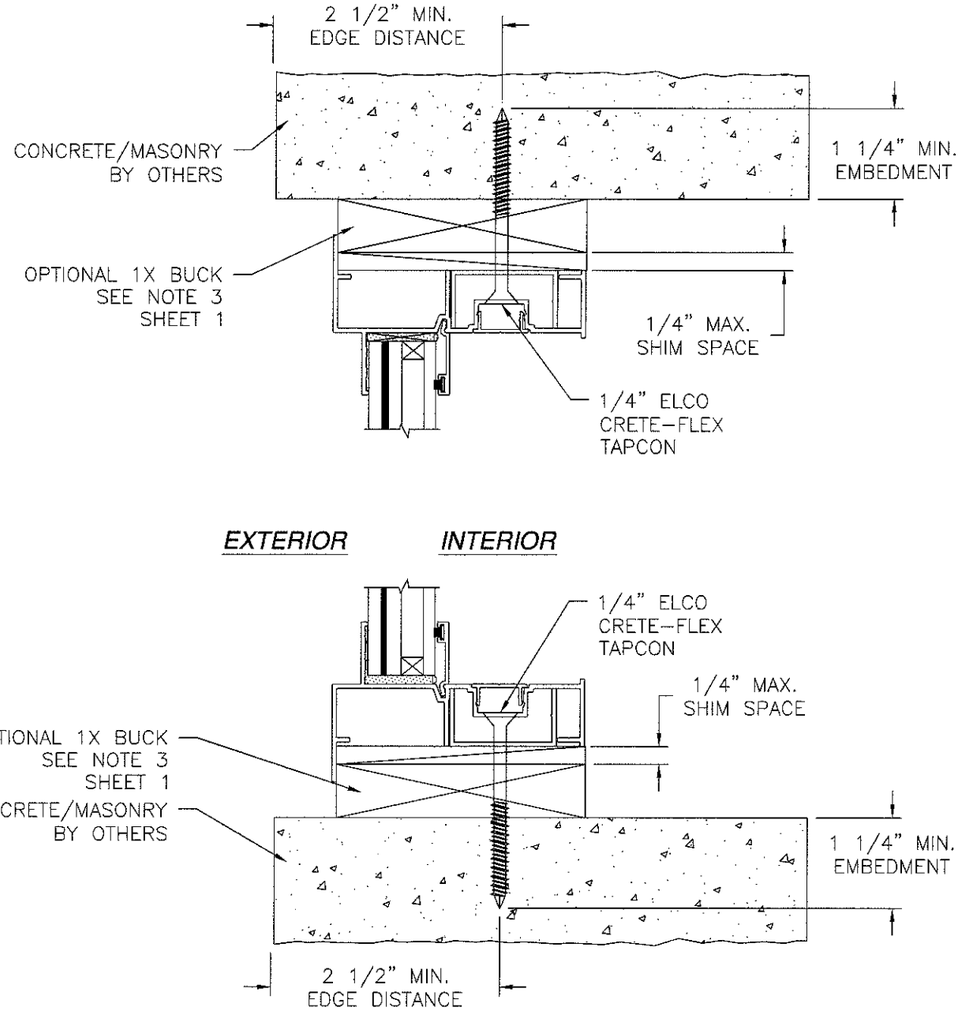


A/8 VERTICAL CROSS SECTION
CONCRETE/MASONRY INSTALLATION

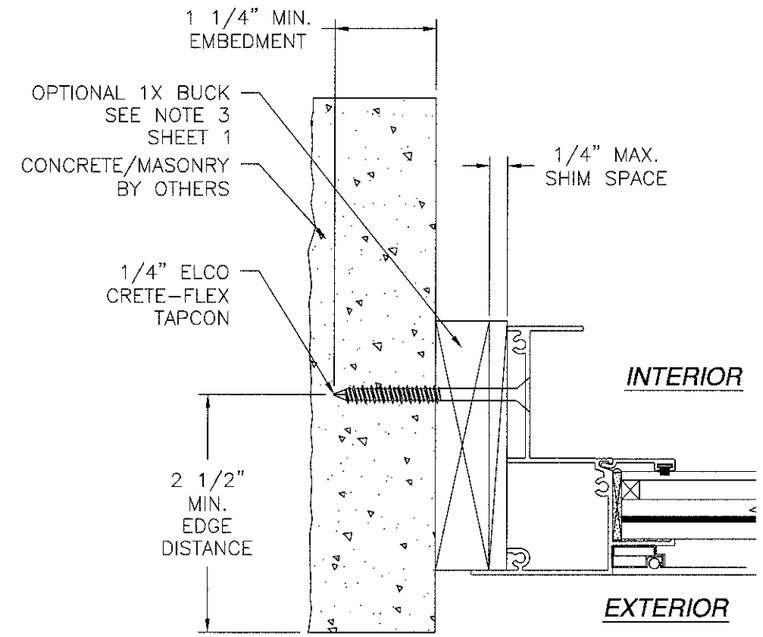


D/8 JAMB INSTALLATION DETAIL
CONCRETE/MASONRY INSTALLATION
FIXED WINDOW SHOWN OTHERS SIMILAR

SIGNED: 06/22/2016

NOTE:
1. INTERIOR AND EXTERIOR FINISHES, BY OTHERS, NOT SHOWN FOR CLARITY.
2. PERIMETER AND JOINT SEALANT BY OTHERS TO BE DESIGNED IN ACCORDANCE WITH ASTM E2112

PRODUCT REVISED
as complying with the Florida
Building Code
Acceptance No 15-0715.07
Expiration Date April 3, 2019
By Manuel Perez
Miami Dade Product Control


WinDoor INCORPORATED
7500 AMSTERDAM DRIVE
ORLANDO, FL 32832
Phone: 407.481.8400
Fax: 407.481.0505
www.windoorinc.com


4030 ALUMINUM WINDOW WALL
SMALL MISSILE IMPACT – HVHZ
FLANGE INSTALLATION DETAILS

| DRAWN: | DWG NO. | REV |
|---|---|---|
| N.G. | 08-02139 | B |
| SCALE NTS | DATE 07/17/13 | SHEET 8 OF 9 |

LUIS R. LOMAS
LICENSE
No. 6251
STATE OF
FLORIDA
PROFESSIONAL ENGINEER

| REVISIONS | | | |
|---|---|---|---|
| REV | DESCRIPTION | DATE | APPROVED |
| A | REVISED PER MD. COMMENTS | 02/20/14 | R.L. |
| B | REVISED PER NEW STANDARDS | 07/07/15 | R.L. |

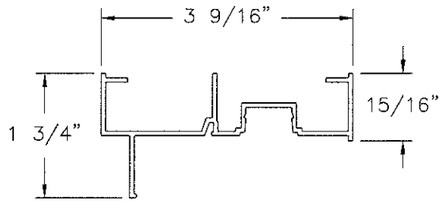


(1) FRAME HEAD - EQ LEG W/ CHANNEL
ALUMINUM 6063-T6 .062" THICK

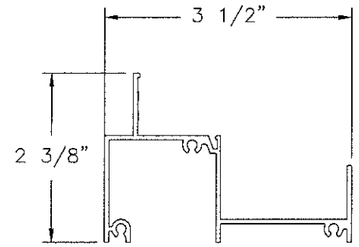


(2) FRAME JAMB - EQ LEG
ALUMINUM 6063-T6 .062" THICK

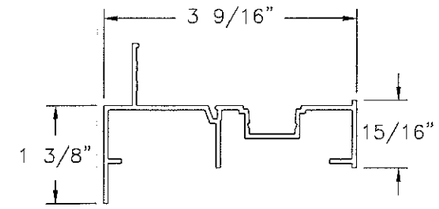


(3) FRAME HEAD FLANGE W/ CHANNEL
ALUMINUM 6063-T6 .062" THICK

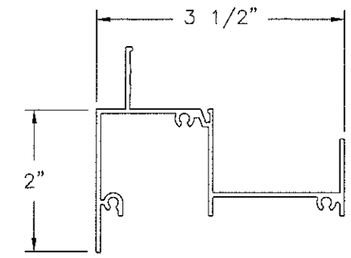


(4) FRAME JAMB FLANGE
ALUMINUM 6063-T6 .062" THICK

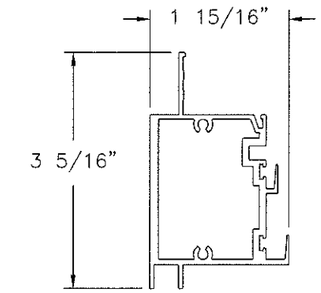


(5) FIXED MEETING RAIL
ALUMINUM 6063-T6 .062" THICK

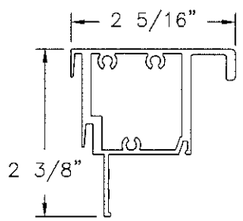


(6) MEETING RAIL
ALUMINUM 6063-T6 .062" THICK

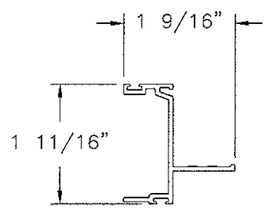


(8) SASH JAMB
ALUMINUM 6063-T6 .070" THICK

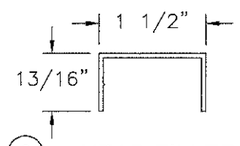


(9) HEAD FILLER
ALUMINUM 6063-T6 .062" THICK

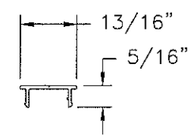


(10) JAMB TRACK COVER
ALUMINUM 6063-T6 .040" THICK

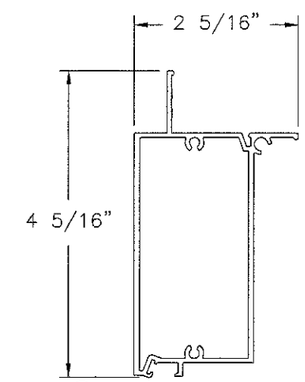


(7) BOTTOM RAIL
ALUMINUM 6063-T6 .062" THICK

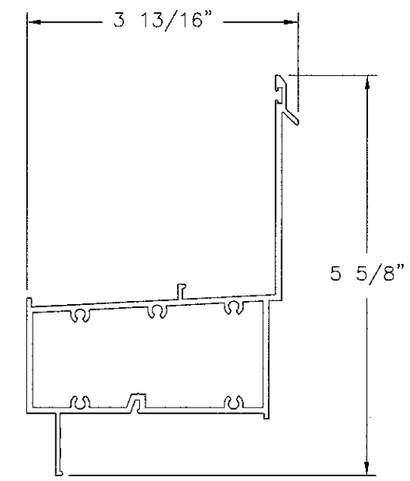


(11) HORIZONTAL IMPOST
ALUMINUM 6063-T6 .080" THICK

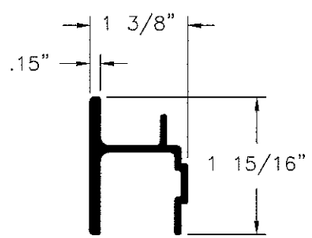


(12) FIXED RAIL REINFORCEMENT
ALUMINUM 6063-T6 .090" THICK

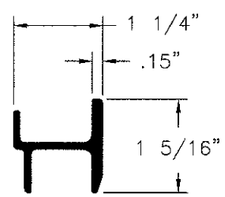


(13) SASH RAIL REINFORCEMENT
ALUMINUM 6063-T6 .090" THICK

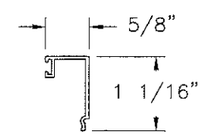


(14) 7/16" GLASS STOP
ALUMINUM 6063-T6 .040" THICK

SIGNED: 06/22/2016

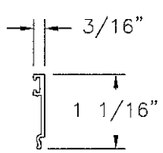


(15) 1" GLASS STOP
ALUMINUM 6063-T6 .050" THICK

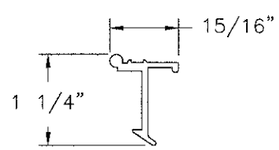


(17) SILL SNAP LOCK
ALUMINUM 6063-T6 .090" THICK

PRODUCT REVISED
as complying with the Florida
Building Code
Acceptance No 15-0715.07
Expiration Date April 3, 2019
By Manuel Perez
Miami-Dade Product Control


WinDoor INCORPORATED
7500 AMSTERDAM DRIVE
ORLANDO, FL 32832
Phone: 407.481.8400
Fax: 407.481.0505
www.windoorinc.com


4030 ALUMINUM WINDOW WALL
SMALL MISSILE IMPACT – HVHZ
COMPONENTS

| DRAWN: | DWG NO. | REV |
|---|---|---|
| N.G. | 08-02139 | B |
| SCALE NTS / DATE 07/17/13 | SHEET 9 OF 9 | |

LUIS R. LOMAS
LICENSE
No. 6251
STATE OF
FLORIDA
PROFESSIONAL ENGINEER