MIAMI-DADE COUNTY
PRODUCT CONTROL SECTION
11805 SW 26 Street, Room 208
Miami, Florida 33175-2474
T (786) 315-2590 F (786) 315-2599
www.miamidade.gov/economy

DEPARTMENT OF REGULATORY AND ECONOMIC RESOURCES (RER)
BOARD AND CODE ADMINISTRATION DIVISION

NOTICE OF ACCEPTANCE (NOA)

Haas Door Company
320 Sycamore Street
Wauseon, OH 43567

SCOPE: This NOA is being issued under the applicable rules and regulations governing the use of construction materials. The documentation submitted has been reviewed and accepted by Miami-Dade County RER-Product Control Section to be used in Miami Dade County and other areas where allowed by the Authority Having Jurisdiction (AHJ). This NOA shall not be valid after the expiration date stated below. The Miami-Dade County Product Control Section (In Miami Dade County) and/or the AHJ (in areas other than Miami Dade County) reserve the right to have this product or material tested for quality assurance purposes. If this product or material fails to perform in the accepted manner, the manufacturer will incur the expense of such testing and the AHJ may immediately revoke, modify, or suspend the use of such product or material within their jurisdiction. RER reserves the right to revoke this acceptance, if it is determined by Miami-Dade County Product Control Section that this product or material fails to meet the requirements of the applicable building code.
This product is approved as described herein, and has been designed to comply with the Florida Building Code, including the High Velocity Hurricane Zone.

DESCRIPTION: Series PAN 2000 & 2400 Steel Sectional Garage Door up to 9'-2" Wide with Optional EPS Insulation

APPROVAL DOCUMENT: Drawing No. **WL-2000-0110-08-65-74M-D**, titled "9' 2" PAN 2000 & 2400 Series HVHZ Wind Load Sectional Door", sheets 1 through 3 of 3, dated 03/11/2015, prepared by Haas Door Company, signed and sealed by Thomas D. Sullivan, P.E., bearing the Miami-Dade County Product Control approval stamp with the Notice of Acceptance number and approval date by the Miami-Dade County Product Control Section.

MISSILE IMPACT RATING: Large and Small Missile Impact Resistant

LABELING: A permanent label with the manufacturer's name or logo, manufacturing address, model number, the positive and negative design pressure rating, indicate impact rated if applicable, installation instruction drawing reference number, approval number (NOA), the applicable test standards, and the statement reading 'Miami-Dade County Product Control Approved' is to be located on the door's side track, bottom angle, or inner surface of a panel.

RENEWAL of this NOA shall be considered after a renewal application has been filed and there has been no change in the applicable building code negatively affecting the performance of this product.

TERMINATION of this NOA will occur after the expiration date or if there has been a revision or change in the materials, use, and/or manufacture of the product or process. Misuse of this NOA as an endorsement of any product, for sales, advertising or any other purposes shall automatically terminate this NOA. Failure to comply with any section of this NOA shall be cause for termination and removal of NOA.

ADVERTISEMENT: The NOA number preceded by the words Miami-Dade County, Florida, and followed by the expiration date may be displayed in advertising literature. If any portion of the NOA is displayed, then it shall be done in its entirety.

INSPECTION: A copy of this entire NOA shall be provided to the user by the manufacturer or its distributors and shall be available for inspection at the job site at the request of the Building Official.
This NOA consists of this page 1 and evidence page E-1, as well as approval document mentioned above.
The submitted documentation was reviewed by **Carlos M. Utrera, P.E.**

MIAMI-DADE COUNTY APPROVED

02/04/2016

NOA No. 15-0721.08
Expiration Date: February 11, 2021
Approval Date: February 11, 2016

NOTICE OF ACCEPTANCE: EVIDENCE SUBMITTED

A. DRAWINGS

1. Drawing No. **WL-2000-0110-08-65-74M-D**, titled "9' 2" PAN 2000 & 2400 Series HVHZ Wind Load Sectional Door", sheets 1 through 3 of 3, dated 03/11/2015, prepared by Haas Door Company, signed and sealed by Thomas D. Sullivan, P.E.

B. TESTS

1. Test reports on 1) Uniform Static Air Pressure Test, Loading per FBC TAS 202-94
   2) Large Missile Impact Test per FBC, TAS 201-94
   3) Cyclic Wind Pressure Loading per FBC, TAS 203-94
   4) Forced Entry Resistance Test, per TAS 202-94

   along with marked-up drawings and installation diagram of 9'-2" wide x 8" height Pan 2000 Series Sectional Steel Garage Doors, prepared by Intertek/ATI, Test Report No. **E1289.04-550-18**, dated 01/07/2015, signed and sealed by Justin P. McDonald, P.E.
2. Test report on Tensile Test per ASTM E8, of steel sheet, prepared by Intertek/ATI, Test Report No. **E1289.14-106-18**, dated 02/26/2015, signed and sealed by Gary T. Hartman, P.E.
3. Test report on Salt Spray per ASTM B117 of coated metal steel panels, prepared by Intertek/ATI, Test Report No. **E1289.10-106-18**, dated 11/24/2014, signed and sealed by Gary T. Hartman, P.E.

C. CALCULATIONS

1. Anchor calculations prepared by JB&B Engineering Consultants, LLC, dated 07/01/2015, signed and sealed by Thomas D. Sullivan, P.E.

D. QUALITY ASSURANCE

1. Miami-Dade Department of Regulatory and Economic Resources (RER)

E. MATERIAL CERTIFICATIONS

1. Test report on Surface Burning Characteristics, per ASTM E84 of Type I EPS, prepared by Intertek Testing Services, NA, Inc., Test Report No. **3094867SAT-001**, dated 04/13/2006, signed by C. Anthony Peñaloza.
2. Test report on Self-Ignition Temperature per ASTM D1929 of Type I EPS, prepared by Intertek Testing Services, NA, Test Report No. **3094867SAT-002**, dated 04/04/2006, signed by C. Anthony Peñaloza, P.E.

F. STATEMENTS

1. Statement letter of code conformance to the 5th edition (2014) FBC issued by JB&B Engineering Consultants, LLC, dated 06/16/2015, signed and sealed by Thomas D. Sullivan, P.E.
2. Statement letter of no financial interest issued by JB&B Engineering Consultants, LLC, dated 06/16/2015, signed and sealed by Thomas D. Sullivan, P.E.

02/04/2016

Carlos M. Utrera, P.E.
Product Control Examiner
NOA No. 15-0721.08
Expiration Date: February 11, 2021
Approval Date: February 11, 2016

Complies with the FBC 5th Edition, (2014)

REVISIONS				
REV.	ZONE	BY	DESCRIPTION	DATE

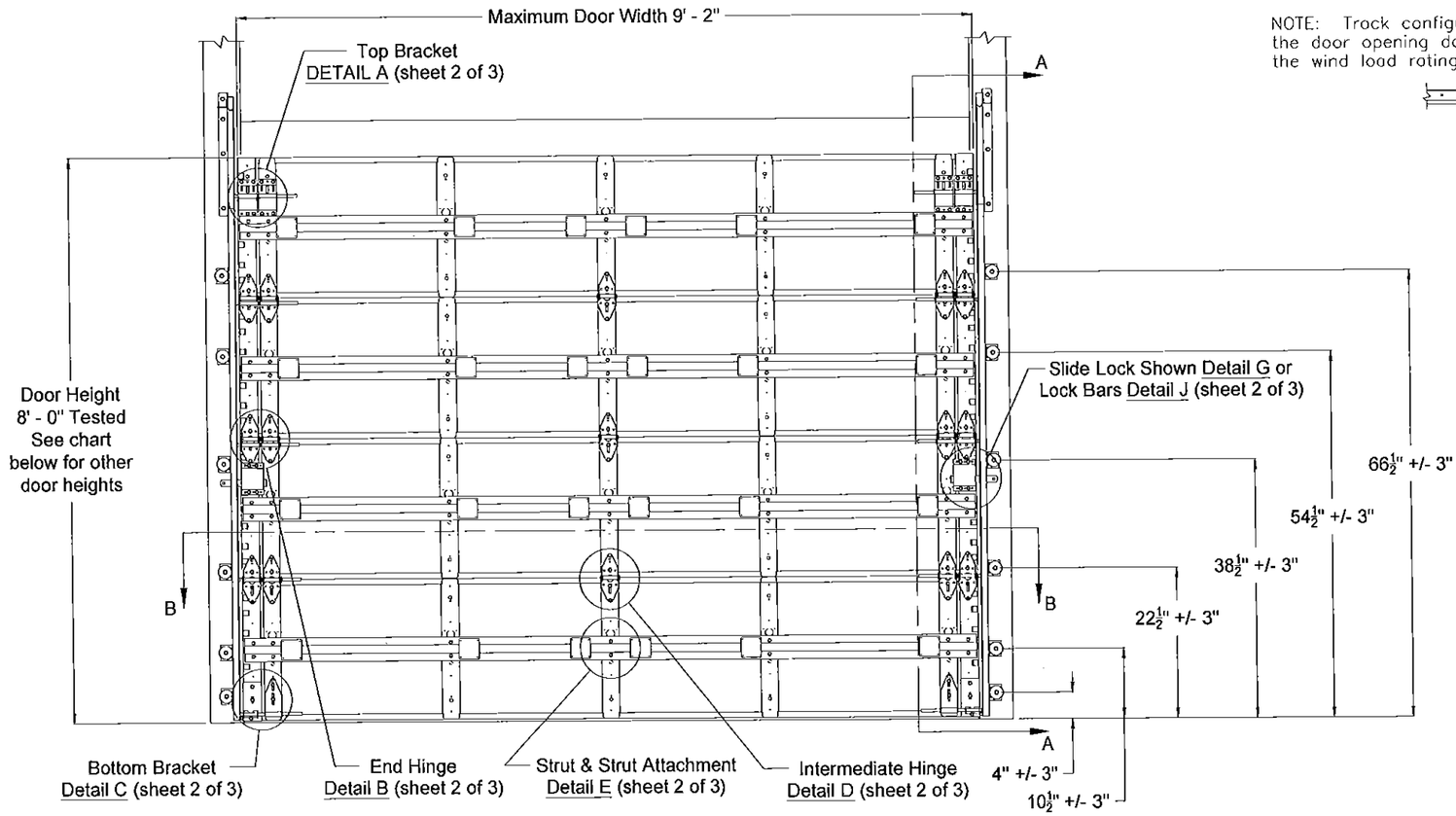

NOTE: Track configuration above the door opening does not affect the wind load rating of the door.

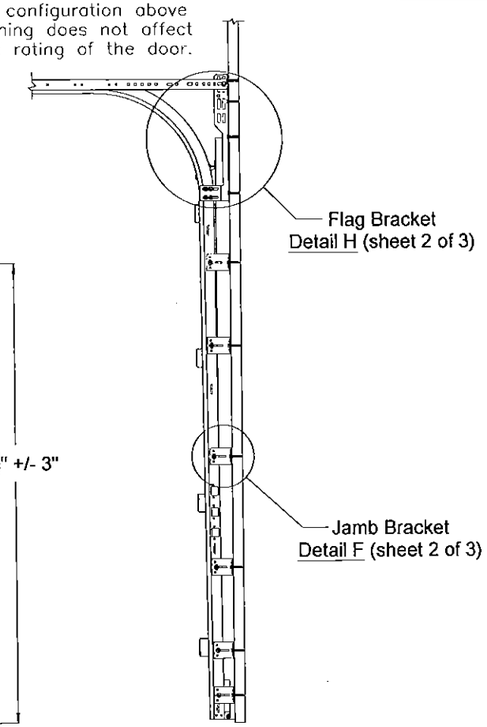

Approved as complying with the Florida Building Code
Date 02/11/2016
NOA# 15-0721.08
Miami Dade Product Control
By

This product has been tested per TAS202-94 for static air pressure.

This product has been tested per TAS201/203-94 for large missile impact and cyclic wind pressure.

Door Width	Design Pressures + psf	Design Pressures - psf	End Stiles	Model Number: PAN C2480 & R2480 SERIES, PAN C2481 & R2481 SERIES, PAN C2482 & R2482 SERIES — Center Stiles	Center Hinges	PAN C2460 & R2460 SERIES, PAN C2461 & R2461 SERIES, PAN C2471 & R2471 SERIES, PAN C2472 & R2472 SERIES — Center Stiles	Center Hinges	PAN C2410 & R2410 SERIES, PAN C2000 SERIES, PAN C2400 SERIES — Center Stiles	Center Hinges	Impact Resistant
6'-0" thru 6'-10"	65.0	-73.5	Single	2	1					YES
8'-0" thru 9'-2"	65.0	-73.5	Single	3	1					YES
7'-3" thru 9'-2"	65.0	-73.5	Single			3	1			YES
7'-0" thru 9'-2"	65.0	-73.5	Single					3	1	YES

This product is available in narrower sizes with the same PSF and constructed as shown.

This product is designed and sold by PSF. The AHJ or Engineer of Record is responsible for determining the PSF required for any given site.

Jamb bracket quantities shown are for use with grade 2 or better southern pine jambs.

Supporting structural element designs are to be the responsibility of the professional of record for the building or structure for the loads listed on this drawing.

Door Height	Total No. of Sections	Total No. of Struts	Strut Configuration	Jamb Brkts/ Side
6'-0"	3	3	SEE SHEET 3 OF 3	5
6'-0"	4	4		5
6'-3"	4	4		5
6'-6"	4	4		5
6'-9"	4	4		5
7'-0"	4	4		6
7'-3"	4	4		6
7'-6"	4	4		6
7'-6"	5	5		6
7'-9"	4	4		6
7'-9"	5	5		6
8'-0"	4	4		6
8'-0"	5	5		6

Maximum section height is 24 in.

Maximum door height is 16 ft.

All doors, even those above the tested height, are available with jamb brackets or commercial full angle. The quantity and dimensional location of the jamb brackets/track clips and the jamb mounting shown above should be maintained.

NOTICE:
These drawings are a supplement to the installation instructions for a standard door and only covers those procedures that vary from standard door installation. If these specific procedures are not followed, the door may not perform as designed.

THOMAS D. SULLIVAN
LICENSE
No 55358
STATE OF
FLORIDA
PROFESSIONAL ENGINEER
3/11/16

IMPACT RESISTANT	This product has been evaluated for use in the High Velocity Hurricane Zone (HVHZ).
Haas Door A Nofziger Company	9'2" PAN 2000 & 2400 SERIES HVHZ WIND LOAD SECTIONAL DOOR DESIGN PRESSURE +65.0/-73.5 PSF
320 Sycamore Wauseon, Ohio 43567 419-337-9900	DRAWING NO.: WL-2000-0110-08-65-74M-D REV.
	DATE DRN: 3/11//15 DRAWN BY: MVS
© Copyright 2014	MODEL(S): See Sheet 3 SHEET: 1 OF 3

Complies with the FBC 5th Edition, (2014)

REVISIONS				
REV.	ZONE	BY	DESCRIPTION	DATE

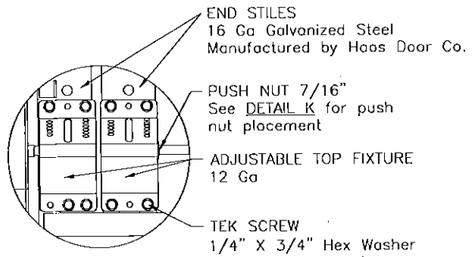

DETAIL A

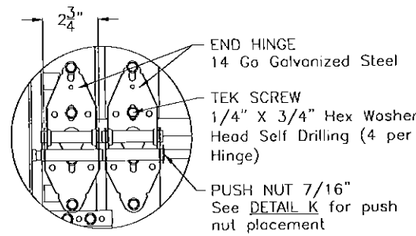

DETAIL B

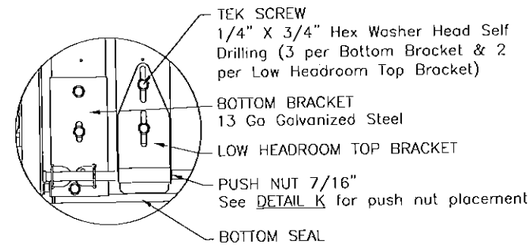

DETAIL C

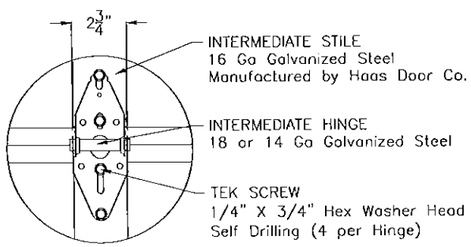

DETAIL D

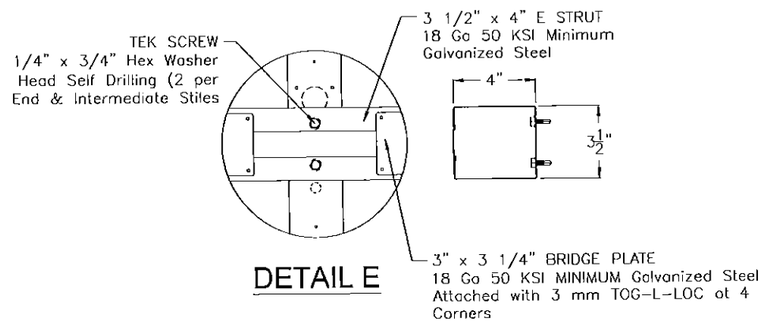

DETAIL E

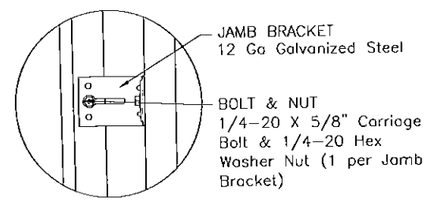

DETAIL F

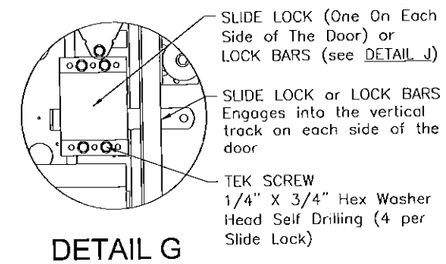

DETAIL G

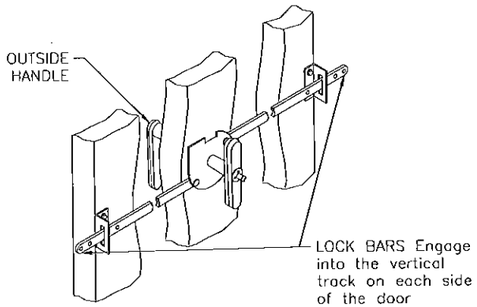

DETAIL J

Alternate Lock Configuration

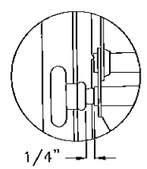

DETAIL K

There should be a space of 1/4" between the roller hub and the outside edge of the roller holder which is set by the push nut.

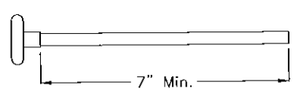

ROLLER

2" Diameter Nominal Ten Ball Nylon w/Hardened Shaft or Ten Ball Steel w/Hardened Shaft with a Minimum Workable Shaft Length Shown.

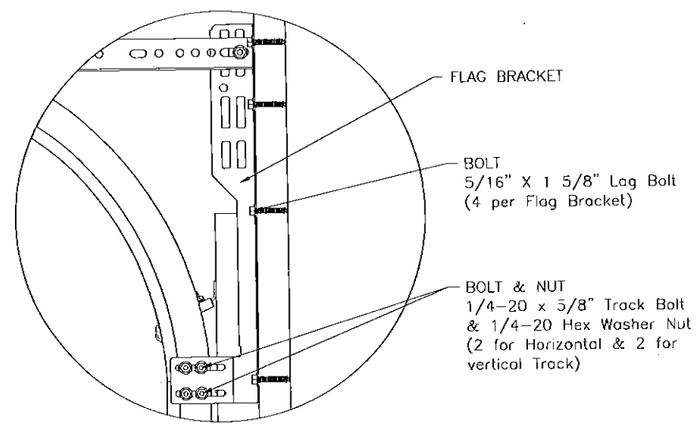

DETAIL H

Approved as complying with the Florida Building Code
Date 02/11/2016
NOA# 15-0727.08
Miami Dade Product Control
By

THOMAS D. SULLIVAN
LICENSE
No 55358
STATE OF FLORIDA
PROFESSIONAL ENGINEER

NOTE: Jamb Loads: +292.5 lbs./ft. / -330.7 lbs./ft.

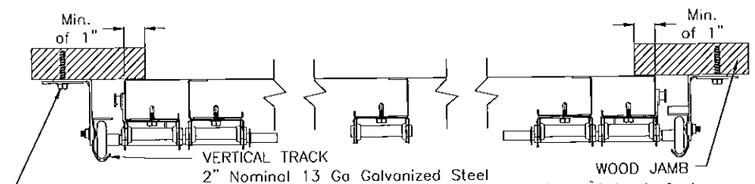

NOTE: Jamb bracket must be in direct contact with the 2x6 (No drywall allowed).

The vertical wood jamb fasteners may be counter sunk to provide a flat mounting surface. See jamb attachment details on sheet 3 for attaching jambs to the structure.

SECTION B-B

NOTE: Details on some views omitted for clarity. Double end stiles and end hardware may be required on wider or heavier doors.

IMPACT RESISTANT	This product has been evaluated for use in the High Velocity Hurricane Zone (HVHZ).
Haas Door. A Nofziger Company	9'2" PAN 2000 & 2400 SERIES HVHZ WIND LOAD SECTIONAL DOOR DESIGN PRESSURE +65.0/-73.5 PSF
320 Sycamore Wauseon, Ohio 43567 419-337-9900	DRAWING NO.: WL-2000-0110-08-65-74M-D REV.
	DATE DRN: 3/11//15 DRAWN BY: MVS
	MODEL(S): See Sheet 3 SHEET: 2 OF 3

Complies with the FBC 5th Edition, (2014)

REVISIONS				
REV.	ZONE	BY	DESCRIPTION	DATE

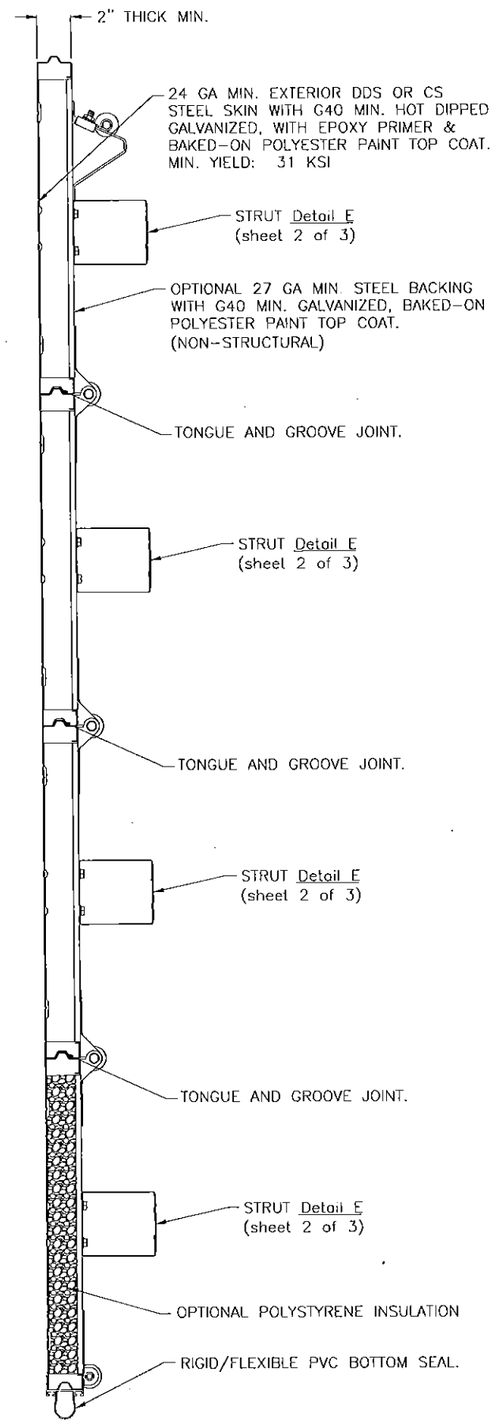

SECTION A-A

MODEL NUMBERS

MODEL NUMBERS AVAILABLE
PAN C2000 SERIES
PAN C2400 SERIES
PAN C2410 & R2410 SERIES
PAN C2460 & R2460 SERIES
PAN C2461 & R2461 SERIES
PAN C2471 & R2471 SERIES
PAN C2472 & R2472 SERIES
PAN C2480 & R2480 SERIES
PAN C2481 & R2481 SERIES
PAN C2482 & R2482 SERIES

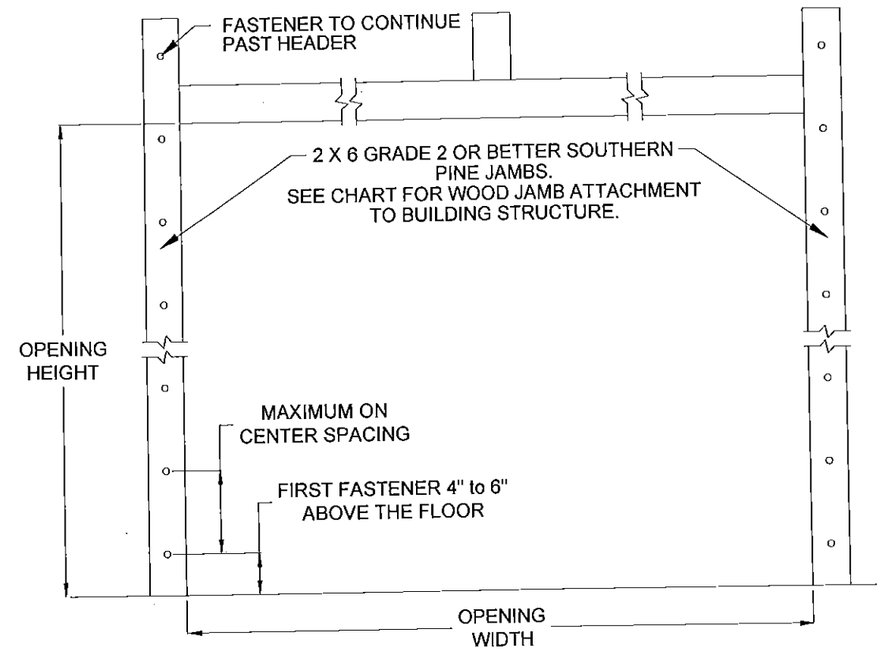

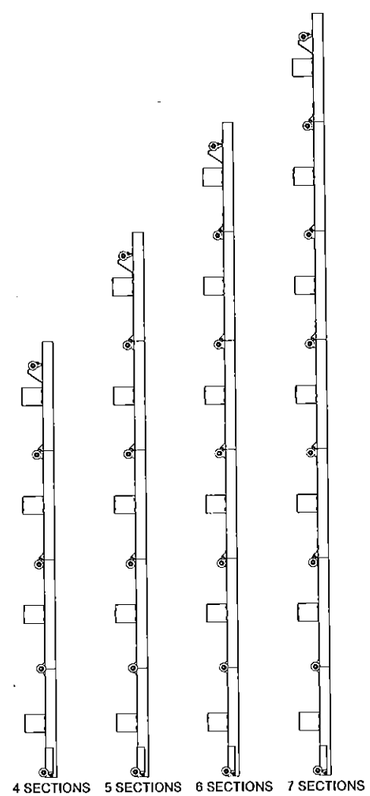

STRUT CONFIGURATION

Building Structure	Fastener Type	Minimum Embedment	Minimum Edge Distance	Minimum on Center Spacing	Maximum on Center Spacing	Allowable Tension Load
Min. 2000 PSI Concrete	Tapcon 1/4" w/ 1" OD washer	1 3/4"	2 1/2"	3"	12"	443 #
Min. 4000 PSI Concrete	Tapcon 1/4" w/ 1" OD washer	1 3/4"	2 1/2"	3"	12"	594 #
Southern Pine (G = 0.55)	5/16" Lag w/ 1 1/8" OD washer	1 1/2"	1 1/2"	4"	12"	553 #
Spruce Pine Fir (G = 0.42)	5/16" Lag w/ 1 1/8" OD washer	2"	1 1/2"	4"	12"	492 #

NOTE: 2X6 mounted to the wall must be Southern Pine Grade 2 or better.

Approved as complying with the Florida Building Code
Date 02/11/2016
NOA# 15-0721.08
Miami Dade Product Control
By

THOMAS D. SULLIVAN
LICENSE
No 55358
STATE OF
FLORIDA
PROFESSIONAL ENGINEER

IMPACT RESISTANT	This product has been evaluated for use in the High Velocity Hurricane Zone (HVHZ).
Haas Door A Nofziger Company	9'2" PAN 2000 & 2400 SERIES HVHZ WIND LOAD SECTIONAL DOOR DESIGN PRESSURE +65.0/-73.5 PSF
320 Sycamore Wauseon, Ohio 43567 419-337-9900 © Copyright 2014	DRAWING NO.: WL-2000-0110-08-65-74M-D REV.
	DATE DRN: 3/11//15 DRAWN BY: MVS
	MODEL(S): See Sheet 3 SHEET: 3 OF 3