MIAMI-DADE COUNTY
PRODUCT CONTROL SECTION
11805 SW 26 Street, Room 208
Miami, Florida 33175-2474
T (786) 315-2590 F (786) 315-2599
www.miamidade.gov/economy

DEPARTMENT OF REGULATORY AND ECONOMIC RESOURCES (RER)
BOARD AND CODE ADMINISTRATION DIVISION

NOTICE OF ACCEPTANCE (NOA)

Master Wall Inc.
P.O. Box 397
Fortson, GA 31808

SCOPE:

This NOA is being issued under the applicable rules and regulations governing the use of construction materials. The documentation submitted has been reviewed and accepted by Miami-Dade County RER-Product Control Section to be used in Miami Dade County and other areas where allowed by the Authority Having Jurisdiction (AHJ).

This NOA shall not be valid after the expiration date stated below. The Miami-Dade County Product Control Section (In Miami Dade County) and/or the AHJ (in areas other than Miami Dade County) reserve the right to have this product or material tested for quality assurance purposes. If this product or material fails to perform in the accepted manner, the manufacturer will incur the expense of such testing and the AHJ may immediately revoke, modify, or suspend the use of such product or material within their jurisdiction. RER reserves the right to revoke this acceptance, if it is determined by Miami-Dade County Product Control Section that this product or material fails to meet the requirements of the applicable building code.

This product is approved as described herein, and has been designed to comply with the Florida Building Code, including the High Velocity Hurricane Zone.

DESCRIPTION: Aggre-flex and Rollershield Drainage H75F5LM EIFS System over 1/2" Dens Glass Gold

APPROVAL DOCUMENT: Drawing No. **H75F5LM**, titled "Aggre-flex and Rollershield Drainage EIFS", sheets 1 through 3 of 3, dated 07/01/2015, prepared by the manufacturer, signed and sealed by Salvatore R. Granata, P.E. on 01/28/2016, bearing the Miami-Dade County Product Control approval stamp with the Notice of Acceptance number and approval date by the Miami-Dade County Product Control Section.

MISSILE IMPACT RATING: Large and Small Missile Impact Resistant

LABELING: Each unit shall bear a permanent label with the manufacturer's name or logo, city, state and following statement: "Miami-Dade County Product Control Approved", unless otherwise noted herein. Each container (bucket or drum) needs to be labeled. Unit is further defined as each roll of reinforcing mesh.

RENEWAL of this NOA shall be considered after a renewal application has been filed and there has been no change in the applicable building code negatively affecting the performance of this product.

TERMINATION of this NOA will occur after the expiration date or if there has been a revision or change in the materials, use, and/or manufacture of the product or process. Misuse of this NOA as an endorsement of any product, for sales, advertising or any other purposes shall automatically terminate this NOA. Failure to comply with any section of this NOA shall be cause for termination and removal of NOA.

ADVERTISEMENT: The NOA number preceded by the words Miami-Dade County, Florida, and followed by the expiration date may be displayed in advertising literature. If any portion of the NOA is displayed, then it shall be done in its entirety.

INSPECTION: A copy of this entire NOA shall be provided to the user by the manufacturer or its distributors and shall be available for inspection at the job site at the request of the Building Official.

This NOA consists of this page 1 and evidence page E-1, as well as approval document mentioned above.

The submitted documentation was reviewed by **Carlos M. Utrera, P.E.**

MIAMI-DADE COUNTY APPROVED

06/06/2016

NOTICE OF ACCEPTANCE: EVIDENCE SUBMITTED

A. DRAWINGS

1. Drawing No. **H75F5LM**, titled "Aggre-flex and Rollershield Drainage EIFS", sheets 1 through 3 of 3, dated 07/01/2015, prepared by the manufacturer, signed and sealed by Salvatore R. Granata, P.E. on 01/28/2016.

B. TESTS

1. Test reports on 1) Air Infiltration Test, per FBC, TAS 202-94
   2) Uniform Static Air Pressure Test, Loading per FBC TAS 202-94
   3) Water Resistance Test, per FBC, TAS 202-94
   4) Large Missile Impact Test per FBC, TAS 201-94
   5) Cyclic Wind Pressure Loading per FBC, TAS 203-94

   along with marked-up drawings and installation diagram of Master Wall EIFS System, prepared by Certified Testing Laboratories, Test Report No. **CTLA-3052W**, dated 04/16/2015, signed and sealed by Ramesh C. Patel, P.E.

C. CALCULATIONS

1. None.

D. QUALITY ASSURANCE

1. Miami-Dade Department of Regulatory and Economic Resources (RER)

E. MATERIAL CERTIFICATIONS

1. Notice of Acceptance No. **11-0926.07**, issued to Dyplast Products LLC, for their Expanded Polystyrene Block Type Insulation, approved on 11/10/2011 and expiring on 01/11/2017.

F. STATEMENTS

1. Drawing No. **H75F5LM** statement of code conformance to the 5th edition (2014) FBC issued by the manufacturer, signed and sealed by Salvatore R. Granata, P.E.
2. Statement letter of no financial interest letter issued by Master Wall, Inc., dated 10/08/2015, signed by Dennis Deppner.

06/06/2016

Carlos M. Utrera, P.E.
Product Control Examiner
NOA No. 15-0729.20
Expiration Date: June 16, 2021
Approval Date: June 16, 2016

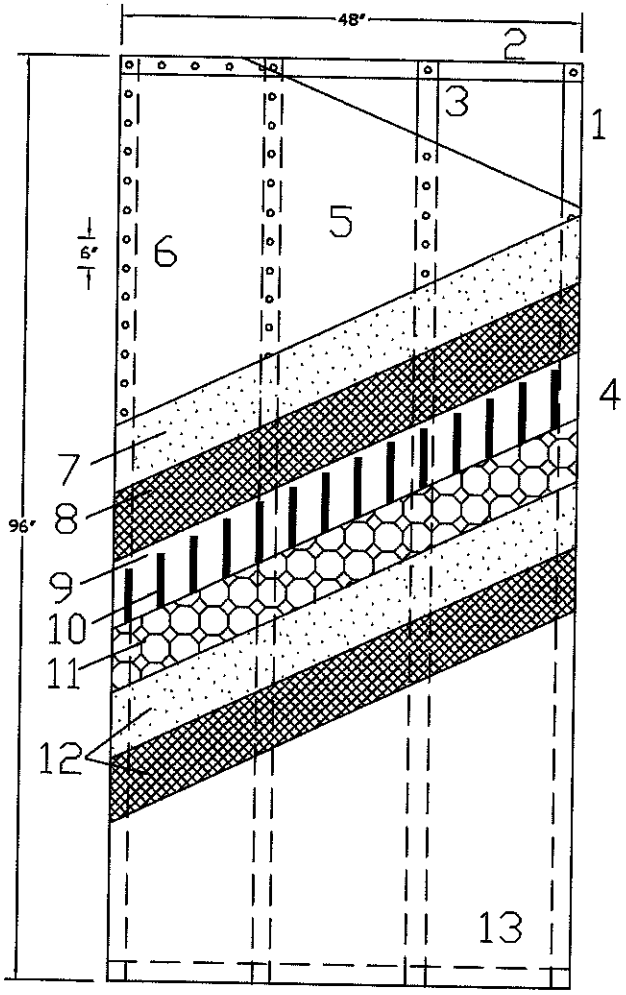

DESIGN PRESSURE +/- 75 psf

H75F5LM Material List

1. 3-5/8" x 18 gage steel studs at 16" o.c.
2. 3-5/8" x 18 gage steel track.
3. Fastened to steel studs with #8 x 1/2" self drilling pan head screw.
4. 20 ga x 2" wide steel strapping on interior side at mid-wall secured with #8 x 1/2" pan head screws.
5. 1/2" Dens Glass Gold sheathing meeting ASTM C1177.
6. Minimum #6 x 1-1/4" bugle head screws spaced at 6" o.c. along framing members.
7. Master Wall F&M base coat mixed 1:1 by weight with Portland cement and water.
8. Master Wall Ultra Mesh 21.0 oz/sy fiberglass reinforcing mesh embedded in the Master Wall base coat.
9. Optional Rollershield Liquid-applied Air/Water Barrier (LAB).
10. Adhere the expanded polystyrene (EPS) insulation board with Master Wall F&M Mixture. The adhesive is applied with a 3/8" x 1/2" notched trowel with notches spaced a maximum of 1-1/2" o.c. The adhesive shall be applied to the back side of the EPS in a vertical orientation.
11. Minimum 1" thick insulation board meeting Master Wall specifications. Insulation board shall possess a current NOA with Miami Dade County.
12. Master Wall Standard reinforcing mesh, 4.5 oz/sy embedded into the F&M base coat. Lap mesh a minimum of 2-1/2" at all edges.
13. Master Wall Superior Finish, 100% acrylic based dirt pickup resistant (DPR) finish.

General Notes

1. The system has been designed in accordance with the Florida Building Code 2014 Edition and its latest supplements.
2. This system has been tested in accordance with Miami Dade County Protocols TAS 201, TAS 202 and TAS 203; Impact, structural and cyclic testing.
3. This system shall be applied by a licensed plastering contractor following this notice of acceptance, the recommendations of Master Wall Inc. and the applicable sections of the Florida Building Code.
4. The Engineer and/or Architect of record for each project using this system shall size all stud framing to ensure conformance with stud deflection and stress limitations as required by all governing codes and this document.
5. Insulation boards shall be positioned in a running bond pattern.
6. All steel studs shall be structural with 1-5/8" minimum flange width and have minimum yield strength of 33000 psi.
7. Details on sheets 3 and 4 are typical and show intent to prevent water infiltration into and behind this system. Alternative details and specific conditions not covered by the typical details are the responsibility of the licensed design professionals.

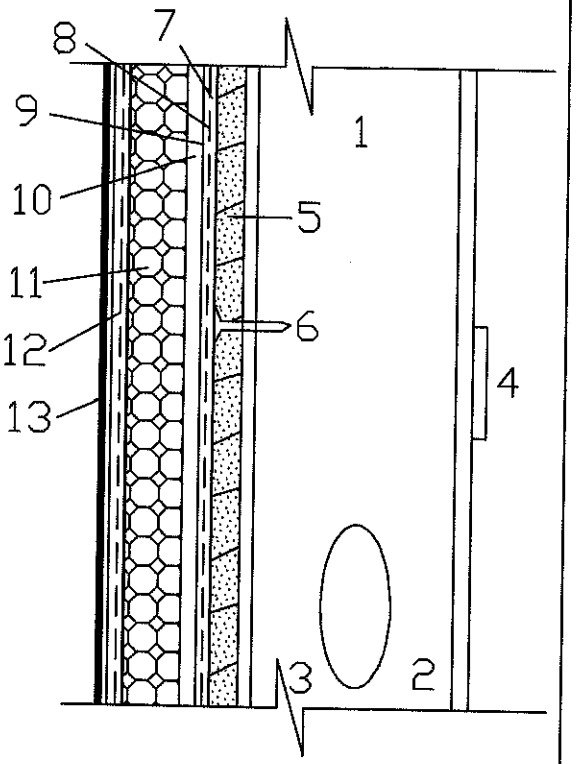

Large Missile Impact Tests TAS 201 and TAS 203
For Risk Category III 2 x 4 traveling 50 feet per second

SALVATORE RAY GRANATA LICENSE No 53467 STATE OF FLORIDA PROFESSIONAL ENGINEER

01/28/16

Salvatore R. Granata, P.E., S.E.
Phone: (678) 367-3151
Cell: (770) 301-6817
Toll Free: (877)345-5126
146 Lee Road 2012
Opelika, AL 36804
Fax: 866-815-4682

Sheet 1 of 3
Date Issued: 07/01/15
Drawing Number:
H75F5LM

Aggre-flex/Rollershield Drainage EIFS
Assy H75F5LM Large and Small Missile Impact
Dens Glass Gold Substrate

Approved as complying with the Florida Building Code
Date 06/16/2016
NOA 15-0124.20
Miami Dade Product Control
By

Master Wall Inc.
Building a Culture of Excellence
P.O. Box 397 Fortson, GA 31808 800-755-0825 FAX 706-569-0092
masterwall.com

Sal Granata

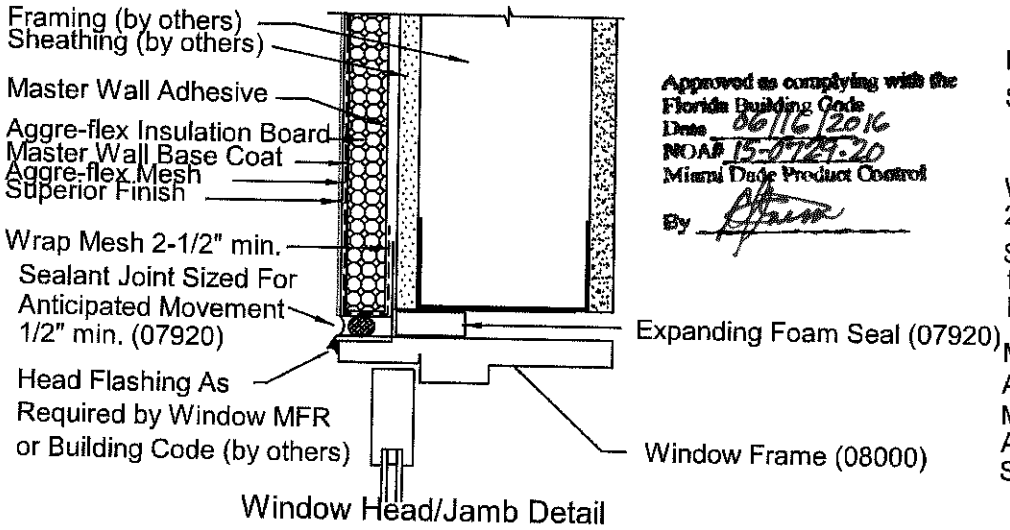

Window Head/Jamb Detail

Approved as complying with the Florida Building Code
Date 06/16/2016
NOA# 15-0729.20
Miami Dade Product Control
By

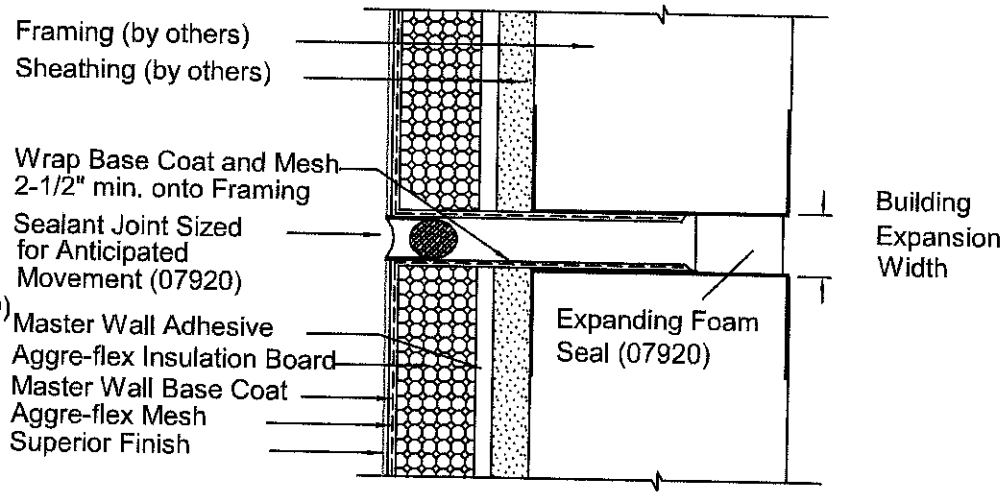

Typical Vertical Expansion Joint

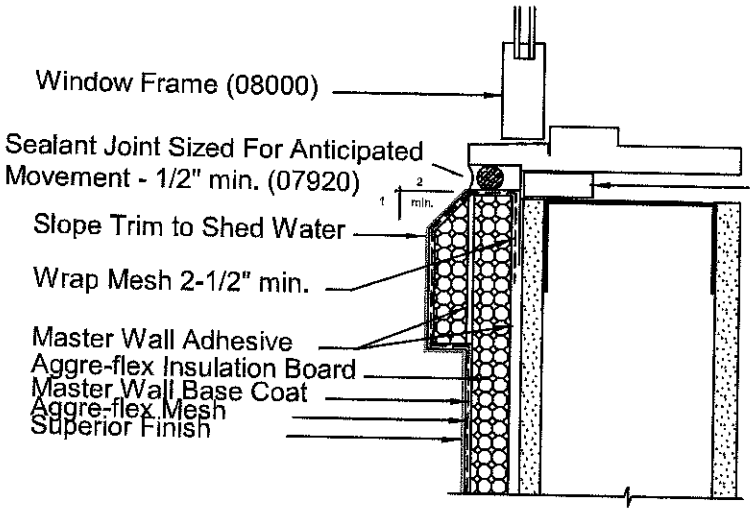

Window Sill Detail

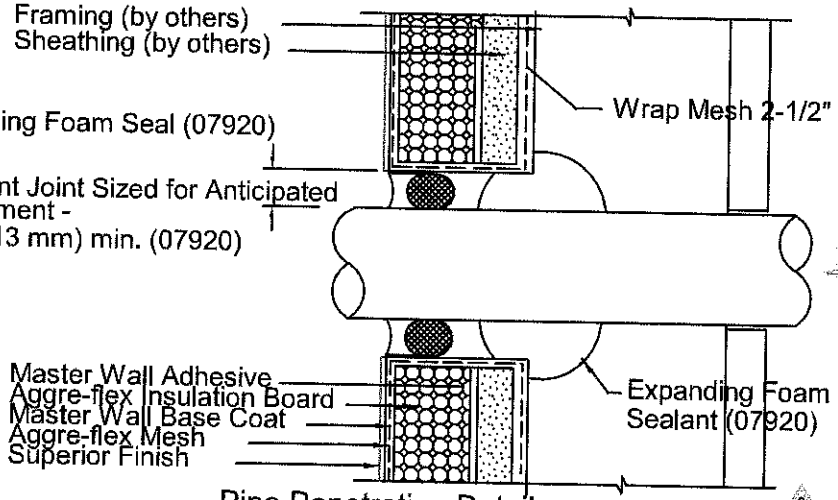

Pipe Penetration Detail

SALVATORE RAY GRANATA LICENSE No 53467 STATE OF FLORIDA PROFESSIONAL ENGINEER

01/28/16

Salvatore R. Granata, P.E., S.E.

Sheet 2 of 3 Date Issued: 07/01/15	Aggre-flex/Rollershield Drainage EIFS Assy H75F5LM Large and Small Missile Impact Aggre-flex Shown, Rollershield Optional
Drawing Number: H75F5LM	

Master Wall Inc.
Building a Culture of Excellence
P.O. Box 397 Fortson, GA 31808 800-755-0825 FAX 706-569-0092
masterwall.com

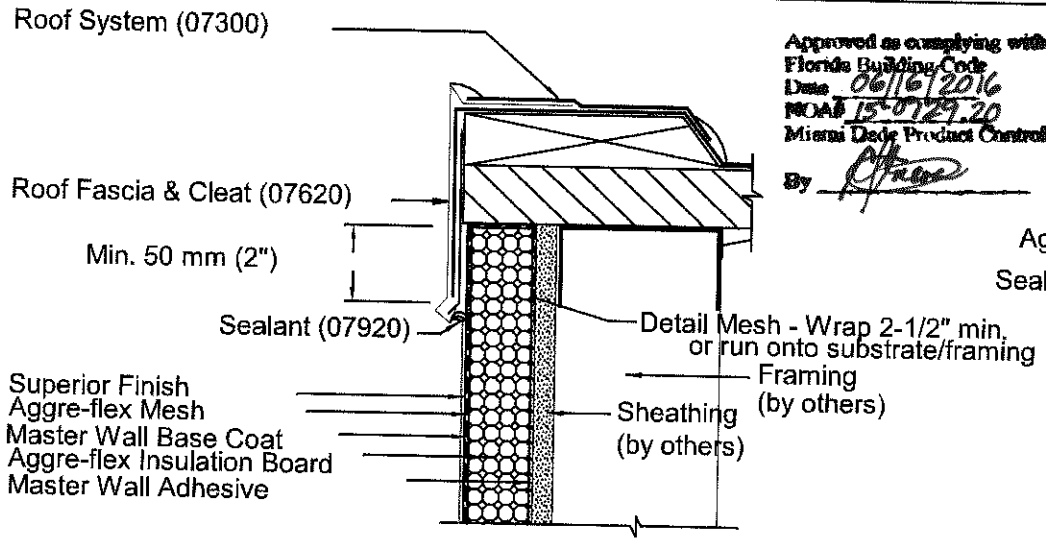

Cap Detail

Approved as complying with the Florida Building Code
Date 06/16/2016
NOA# 15-0729.20
Miami Dade Product Control
By

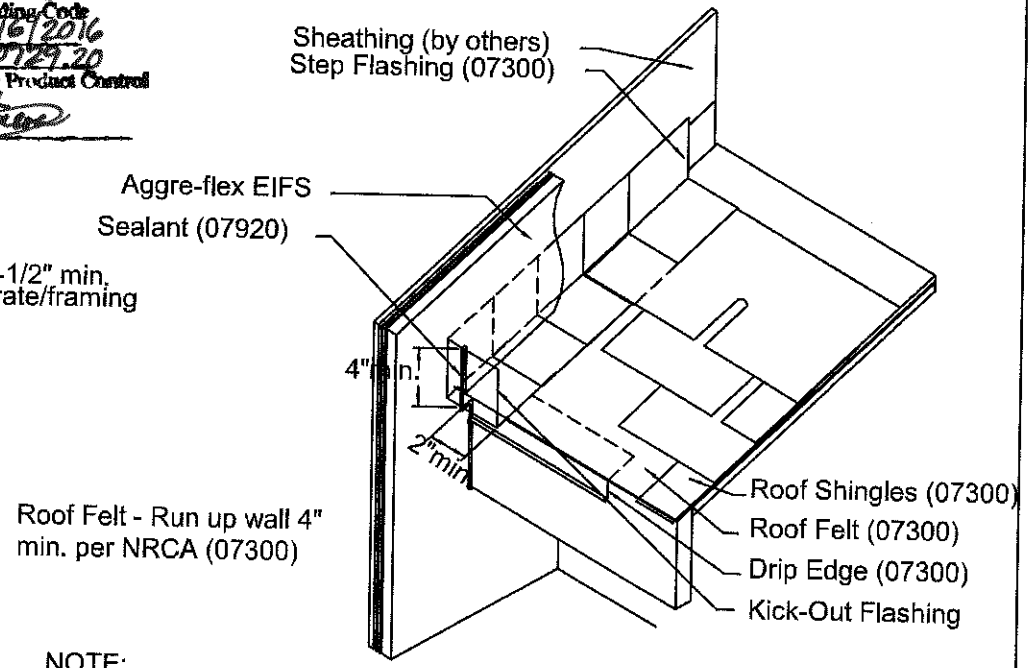

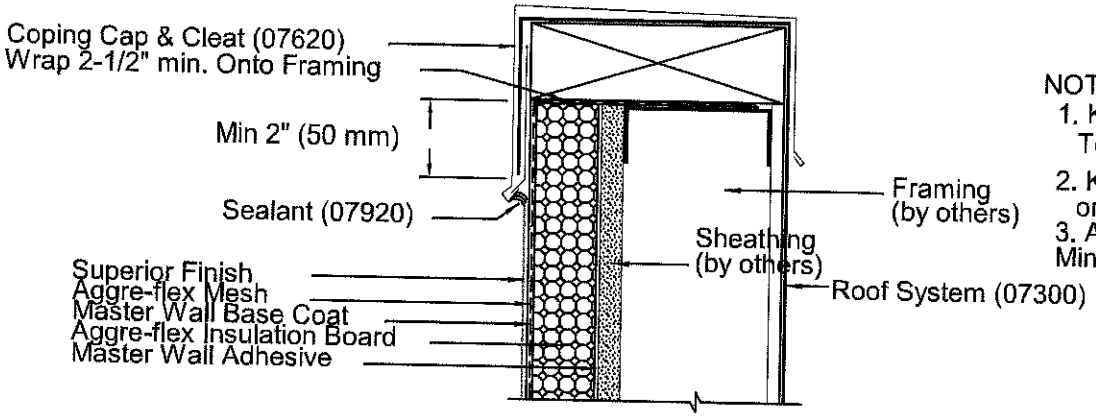

Cap Detail

NOTE:
1. Kickout Flashing Must Be Angled 100 Degrees min. To Allow For Proper Drainage
2. Kick Out Flashing Seams Must Be Soldered or Sealed with Appropriate Sealant.
3. Aggre-flex System Should Cover the Flashing a Minimum of 2" and should end about 1-2" (25-50 mm) Above Roof or in Accordance With Local Requirements

Typical Roof/Wall Intersection

SALVATORE RAY GRANATA LICENSE No 53467 STATE OF FLORIDA PROFESSIONAL ENGINEER

01/28/16

Salvatore R. Granata. P.E., S.E.
Phone: (678) 367-3151
Cell: (770) 301-5817
Toll Free: (877)346-5126
146 Lea Road 2012
Opelika, AL 36804
Fax: 866-815-4662
sal@srgpe.net
www.srgpe.net

Sheet 3 of 3 Date Issued: 07/01/15	Aggre-flex EIFS/Rollershield Drainage EIFS Assy H75F6SM Small Missile Impact Aggre-flex Shown, Rollershield Optional
Drawing Number: H75F6SM	

Master Wall Inc.
Building a Culture of Excellence
P.O. Box 397 Fortson, GA 31808 800-755-0825 FAX 706-569-0092
masterwall.com