MIAMI-DADE COUNTY
PRODUCT CONTROL SECTION
11805 SW 26 Street, Room 208
Miami, Florida 33175-2474
T (786) 315-2590 F (786) 315-2599
www.miamidade.gov/economy

DEPARTMENT OF REGULATORY AND ECONOMIC RESOURCES (RER)
BOARD AND CODE ADMINISTRATION DIVISION

NOTICE OF ACCEPTANCE (NOA)

U. S. Aluminum (FL),
Division of C. R. Laurence Company
7500 NW 69th Ave
Miami, FL 33166

SCOPE:

This NOA is being issued under the applicable rules and regulations governing the use of construction materials. The documentation submitted has been reviewed and accepted by Miami–Dade County RER – Product Control Section to be used in Miami Dade County and other areas where allowed by the Authority Having Jurisdiction (AHJ).

This NOA shall not be valid after the expiration date stated below. The Miami–Dade County Product Control Section (In Miami–Dade County) and/or the AHJ (in areas other than Miami–Dade County) reserve the right to have this product or material tested for quality assurance purposes. If this product or material fails to perform in the accepted manner, the manufacturer will incur the expense of such testing and the AHJ may immediately revoke, modify, or suspend the use of such product or material within their jurisdiction. RER reserves the right to revoke this acceptance, if it is determined by Miami–Dade County Product Control Section that this product or material fails to meet the requirements of the applicable building code.

This product is approved as described herein, and has been designed to comply with the Florida Building Code, including the High Velocity Hurricane Zone.

DESCRIPTION: Series "DHS-500" Aluminum Storefront System-SMI

APPROVAL DOCUMENT: Drawing N0. **W07-42 Rev G,** titled "Series-DHS-500 Alum Window wall/ Storefront Sys-SMI", sheets 1 through 11 of 11, prepared by Al Farooq Corporation, dated 05/03/07 and last revised on 04/05/16, signed and sealed by Javad Ahmad, P.E., bearing the Miami-Dade County Product Control revision stamp with the Notice of Acceptance number and expiration date by the Miami-Dade County Product Control section.

MISSILE IMPACT RATING: Small Missile Impact Resistant

LABELING: Each unit shall bear a permanent label with the manufacturer's name or logo, city, state, model/series, and following statement: "Miami–Dade County Product Control Approved", unless otherwise noted herein.

RENEWAL of this NOA shall be considered after a renewal application has been filed and there has been no change in the applicable building code negatively affecting the performance of this product.

TERMINATION of this NOA will occur after the expiration date or if there has been a revision or change in the materials, use, and/or manufacture of the product or process. Misuse of this NOA as an endorsement of any product, for sales, advertising or any other purposes shall automatically terminate this NOA. Failure to comply with any section of this NOA shall be cause for termination and removal of NOA.

ADVERTISEMENT: The NOA number preceded by the words Miami–Dade County, Florida, and followed by the expiration date may be displayed in advertising literature. If any portion of the NOA is displayed, then it shall be done in its entirety.

INSPECTION: A copy of this entire NOA shall be provided to the user by the manufacturer or its distributors and shall be available for inspection at the job site at the request of the Building Official.

This NOA **revises NOA No. 12-0406.02** and consists of this page 1 and evidence pages E–1 and E-2, as well as approval document mentioned above.

The submitted documentation was reviewed by **Jorge M. Plasencia, P. E.**

MIAMI-DADE COUNTY APPROVED

5/5/16

U. S. Aluminum (FL),
Division of C. R . Laurence Company

NOTICE OF ACCEPTANCE: EVIDENCE SUBMITTED

A. DRAWINGS

1. Manufacturer's die drawings and sections.
   (Submitted under previous NOA #09-0218.06)
2. Drawing N0. **W07-42 Rev G,** titled "Series-DHS-500 Alum Window wall/ Storefront Sys-SMI", sheets 1 through 11 of 11, prepared by Al Farooq Corporation, dated 05/03/07 and last revised on 04/05/16, signed and sealed by Javad Ahmad, P.E.

B. TESTS

1. Test reports on: 1) Air Infiltration Test, per FBC, TAS 202–94
   2) Uniform Static Air Pressure Test, Loading per FBC TAS 202–94
   3) Water Resistance Test, per FBC, TAS 202–94
   4) Small Missile Impact Test per FBC, TAS 201–94
   5) Cyclic Wind Pressure Loading per FBC, TAS 203–94

   along with marked–up drawings and installation diagram of Aluminum Flush Glazed Storefront System, prepared by Fenestration Testing Laboratory, Inc., Test Report No. **FTL-4989**, dated 03/01/2007, signed and sealed by Michael R. Wenzel, P. E.
   (Submitted under previous NOA #08-0618.08 / #09-0218.06)
2. Additional reference test reports:
   2.1 Test Report No(s) **FTL-4254, FTL-4306** and **FTL-4320** per TAS 202, 201/203-94, issued by Fenestration testing Laboratories Inc.
   2.2 Test Report No. **FTL-5662,** dated 06-29-08, per TAS 202, 201/203-94, issued by Fenestration testing Laboratories Inc.
   (Submitted under previous NOA #08-0618.08 / #09-0218.06)

C. CALCULATIONS

1. Anchor verification calculations and structural analysis, complying with FBC–2014, prepared by Al–Farooq Corporation, dated 07/13/15 and 05/03/16, signed and sealed by Javad Ahmad, P. E.
2. Glazing complies with ASTM E1300–09.

D. QUALITY ASSURANCE

1. Miami–Dade Department of Regulatory and Economic Resources (RER).

E. MATERIAL CERTIFICATIONS

1. Notice of Acceptance No. **15-1201.11** issued to **Eastman Chemical Company (MA).** for their "**Saflex Clear and Color Glass Interlayer**" dated 03/17/16, expiring on 05/21/21.

Jorge M. Plasencia P.E.
Product Control Unit Supervisor
NOA No. 15-0810.01
Expiration Date: November 15, 2017
Approval Date: May 12, 2016

NOTICE OF ACCEPTANCE: EVIDENCE SUBMITTED

F. STATEMENTS

1. Statement letter of conformance, issued by Al–Farooq Corporation, dated 06/29/15, signed and sealed by Javad Ahmad, P. E.
2. Lab compliance as part of the above referenced test reports.
3. Press Release dated August 25, 2011, issued by C. R. Laurence Company, Inc. of announcement of C. R. Laurance (CRL) and U. S. Aluminum Company (USAL) on the integration of Delta Doors with U.S. Aluminum, Florida.
   (Submitted under previous NOA #12-0406.02)
4. Press Release dated 07/08/11, issued by C. R. Laurence Company, Inc. (CRL) announcing the Acquisition of U.S. Aluminum Company (USAL).
   (Submitted under previous NOA #12-0406.02)

G. OTHERS

1. Notice of Acceptance No. **12-0406.02**, issued to US Aluminum (FL), for their **Series "DHS-500" Aluminum Storefront System-SMI**, approved on 10/11/12 and expiring on 11/15/17.
2. Test proposals dated 11/08/11 approved by PERA and # 02-0472 dated 07-05-02 & #06-0182 dated 6/7/6 issued by BCCO.

Jorge M. Plasencia P.E.
Product Control Unit Supervisor
NOA No. 15-0810.01
Expiration Date: November 15, 2017
Approval Date: May 12, 2016

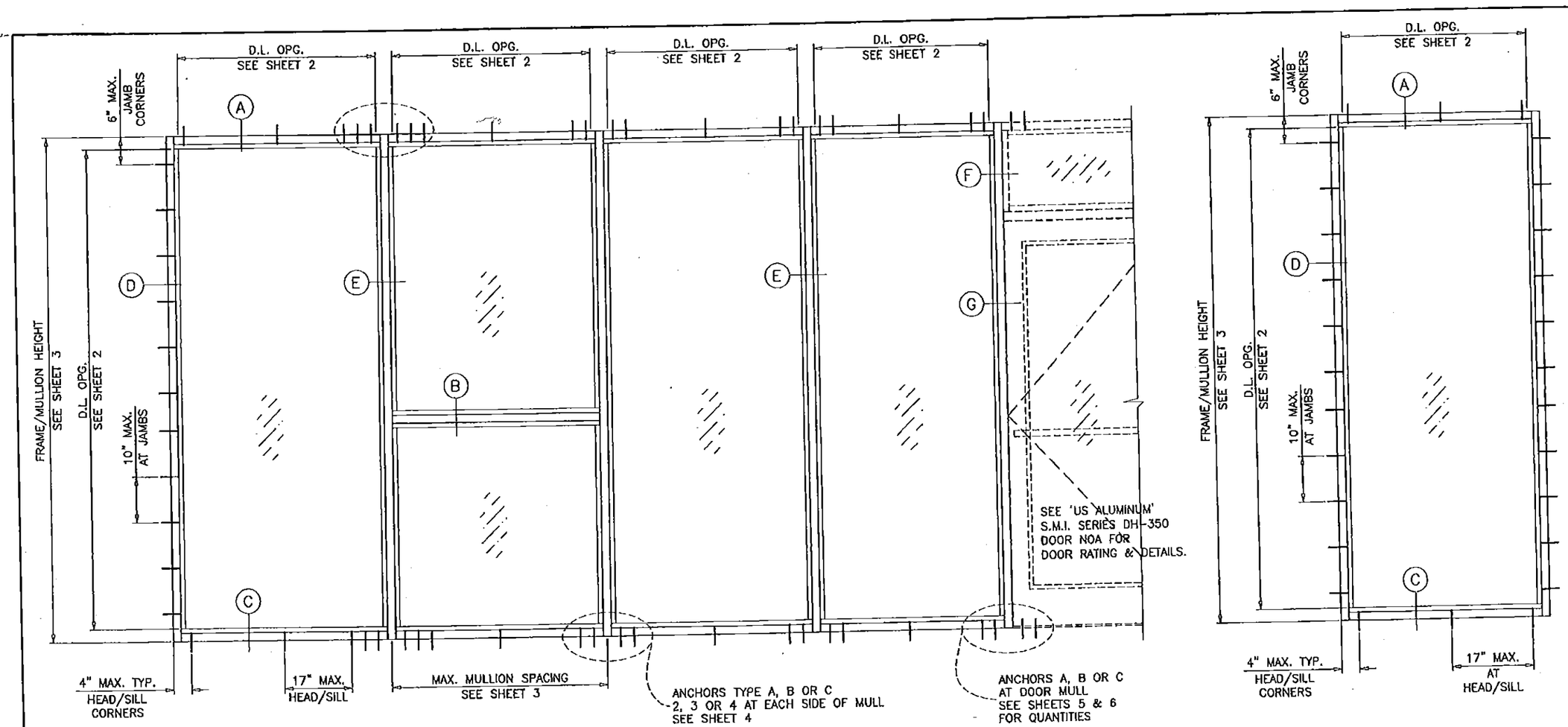

TYPICAL ELEVATIONS

SERIES DHS-500
ALUMINUM WINDOWALL/STOREFRONT SYSTEM

THIS SYSTEM MAY BE USED IN CONJUNCTION WITH MIAMI-DADE COUNTY APPRROVED SMALL MISSILE IMPACT RESISTANT US ALUMINUM SERIES DH-350 DOORS.

LOWER DESIGN PRESSURE FROM STOREFRONT OR DOOR APPROVAL WILL APPLY TO ENTIRE SYSTEM.

CODE REQUIREMENTS FOR SAFEGUARDS MUST BE OBSERVED.

THIS PRODUCT HAS BEEN DESIGNED AND TESTED TO COMPLY WITH THE REQUIREMENTS OF THE 2014 (5TH EDITION) FLORIDA BUILDING CODE INCLUDING HIGH VELOCITY HURRICANE ZONE (HVHZ).

1BY OR 2BY WOOD BUCKS BY OTHERS, MUST BE ANCHORED PROPERLY TO TRANSFER LOADS TO THE STRUCTURE.

ANCHORS SHALL BE AS LISTED, SPACED AS SHOWN ON DETAILS, ANCHORS EMBEDMENT TO BASE MATERIAL SHALL BE BEYOND WALL DRESSING OR STUCCO.

ANCHORING OR LOADING CONDITIONS NOT SHOWN IN THESE DETAILS ARE NOT PART OF THIS APPROVAL.

A LOAD DURATION INCREASE IS USED IN DESIGN OF ANCHORS INTO WOOD ONLY.

ALL SHIMS TO BE HIGH IMPACT, NON-METALLIC AND NON-COMPRESSIBLE.

MATERIALS INCLUDING BUT NOT LIMITED TO STEEL/METAL SCREWS, THAT COME INTO CONTACT WITH OTHER DISSIMILAR MATERIALS SHALL MEET THE REQUIREMENTS OF THE 2014 FLORIDA BUILDING CODE.

THIS PRODUCT RATED FOR SMALL MISSILE IMPACT.
MIAMI-DADE COUNTY APPROVED IMPACT RESISTANT SHUTTERS REQUIRED FOR INSTALLATIONS UP TO 30 FT. OF GRADE.
SHUTTERS NOT REQD. FOR INSTALLATIONS ABOVE 30 FT. OF GRADE.

INSTRUCTIONS:

USE CHARTS AS FOLLOWS.

STEP 1 DETERMINE DESIGN WIND LOAD REQUIREMENT BASED ON WIND VELOCITY, BLDG. HEIGHT, WIND ZONE USING APPLICABLE ASCE 7 STANDARD.

STEP 2 SEE CHARTS ON SHEET 2 FOR DESIGN LOAD CAPACITY OF DESIRED GLASS SIZE.

STEP 3 CHECK MULLION CAPACITY FOR A GIVEN SPACING AND HEIGHT USING CHARTS ON SHEET 3 FOR STOREFRONT MULLION AND SHEETS 5 & 6 FOR DOOR MULLION. THE CAPACITY SHOULD EXCEED THE DESIGN LOAD.

STEP 4 USING CHARTS ON SHEET 4 FOR STOREFRONT MULLION AND CHARTS ON SHEETS 5 & 6 FOR DOOR MULLION SELECT ANCHOR OPTION WITH DESIGN RATING MORE THAN DESIGN LOAD SPECIFIED IN STEP 1 ABOVE.

STEP 5 THE LOWEST VALUE RESULTING FROM STEPS 2, 3 AND 4 SHALL APPLY TO ENTIRE SYSTEM.

PRODUCT REVISED
as complying with the Florida Building Code
NOA-No. 15-0810.01
Expiration Date 11/15/2017
By
Miami-Dade Product Control

LAMINATED GLASS
SMALL MISSILE IMPACT

MAY 0 3 2017

JAVAD AHMAD
LICENSE
No. 70592
STATE OF FLORIDA
PROFESSIONAL ENGINEER

AL-FAROOQ CORPORATION
ENGINEERS & PRODUCT DEVELOPMENT
9360 SUNSET DRIVE, SUITE 220
MIAMI, FLORIDA 33173 (C.A.N. 3538)
TEL. (305) 264-8100 FAX. (305) 262-6978
STORE\W07-42DD

Series 'DHS-500' Windowall/Storefront Sys. (S.M.I.)

US Aluminum
Division Of C.R. Laurence Co., Inc.
7500 N.W. 69TH AVE.
MIAMI, FL 33166
TEL. (305) 888-0077 FAX. (305) 884-3111

revisions:			
no	date	by	description
C	08.06.08		NO CHANGE THIS SHEET
D	03.27.12		UPDATED TO 2010 FBC
E	09.01.12		REV. PER RER COMMENTS
F	07.01.15		UPDATED TO 2014 FBC
G	04.05.16		REV. PER RER COMMENTS

date: 05-03-07
scale: 1/2"=1'-0"
dr. by: TARIQ
chk. by:

drawing no.
W07-42

GLASS LOAD CAPACITY – PSF		
NOMINAL DIMS.		9/16" LAM. GL.
D.L.O. WIDTH	D.L.O. HEIGHT	EXT.(+)/INT.(-)
28"	60"	130.0
32"		130.0
36"		130.0
40"		130.0
44"		130.0
48"		130.0
52"		110.8
56"		95.5
60"		83.2
28"	66"	130.0
32"		130.0
36"		130.0
40"		130.0
44"		130.0
48"		130.0
52"		110.8
56"		95.5
60"		83.2
28"	72"	130.0
32"		130.0
36"		130.0
40"		130.0
44"		130.0
48"		130.0
52"		110.8
56"		95.5
60"		83.2
28"	78"	130.0
32"		130.0
36"		130.0
40"		130.0
44"		130.0
48"		130.0
52"		110.8
56"		95.5
60"		83.2
28"	84"	130.0
32"		130.0
36"		130.0
40"		130.0
44"		130.0
48"		130.0
52"		110.8
56"		95.5
60"		83.2
28"	90"	130.0
32"		130.0
36"		130.0
40"		130.0
44"		130.0
48"		130.0
52"		110.8
56"		95.5

GLASS LOAD CAPACITY – PSF		
NOMINAL DIMS.		9/16" LAM. GL.
D.L.O. WIDTH	D.L.O. HEIGHT	EXT.(+)/INT.(-)
28"	96"	130.0
32"		130.0
36"		130.0
40"		130.0
44"		130.0
48"		130.0
52"		110.8
28"	102"	130.0
32"		130.0
36"		130.0
40"		130.0
44"		130.0
48"		130.0
28"	108"	130.0
32"		130.0
36"		130.0
40"		130.0
44"		130.0
28"	114"	130.0
32"		130.0
36"		130.0
40"		130.0
44-1/4"	114-1/2"	130.0

D.L.O. WIDTH DEDUCTION = 3-3/4"
D.L.O. HEIGHT DEDUCTION = 5-1/2"

NOTE:
GLASS CAPACITIES ON THIS SHEET ARE BASED ON ASTM E1300-09 (3 SEC. GUSTS).

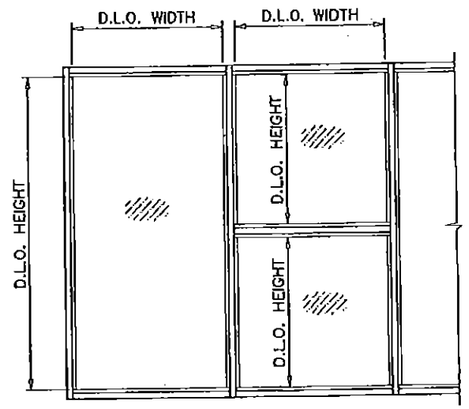

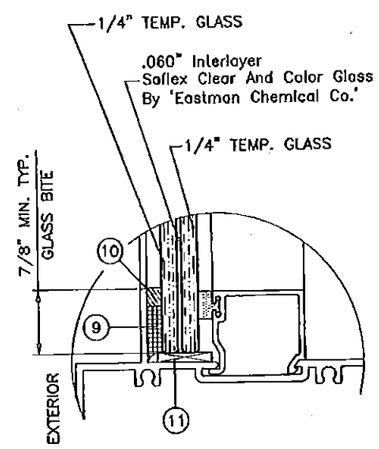

GLAZING DETAIL

PRODUCT REVISED
as complying with the Florida Building Code
NOA-No. 15-0810.01
Expiration Date 11/15/2017
By
Miami-Dade Product Control

MAY 03 2016

JAVAD AHMAD
LICENSE
No. 70592
STATE OF FLORIDA
PROFESSIONAL ENGINEER

AL-FAROOQ CORPORATION
ENGINEERS & PRODUCT DEVELOPMENT
9360 SUNSET DRIVE, SUITE 220
MIAMI, FLORIDA 33173 (C.A.N. 3538)
TEL. (305) 264-8100 FAX. (305) 262-6978

STORE\W07-42DD

Series 'DHS-500' Windowall/Storefront Sys. (S.M.I.)

US Aluminum
Division Of C.R. Laurence Co., Inc.
7500 N.W. 69TH AVE.
MIAMI, FL 33166
TEL. (305) 888-0077 FAX. (305) 884-3111

revisions:

no	date	by	description
C	08.06.08		NO CHANGE THIS SHEET
D	03.27.12		UPDATED TO 2010 FBC
E	09.01.12		REV. PER PER COMMENTS
F	07.01.15		UPDATED TO 2014 FBC
G	04.05.16		NO CHANGE THIS SHEET

date: 05-03-07
scale: 1/2" = 1"
dr. by: TARIQ
chk. by:

drawing no.
W07-42

MULLION LOAD CAPACITY – PSF
MULLIONS WITHOUT INTERMEDIATE HORIZONTALS

NOMINAL DIMS.		WITHOUT REINF.	LIGHT REINF.	HEAVY REINF.
WIDTH (W)	FRAME HEIGHT	EXT. (+) INT. (–)	EXT. (+) INT. (–)	EXT. (+) INT. (–)
32"	72"	100.0	130.0	130.0
36"		100.0	130.0	130.0
40"		100.0	130.0	130.0
44"		100.0	130.0	130.0
48"		100.0	130.0	130.0
52"		100.0	130.0	130.0
56"		100.0	130.0	130.0
60"		100.0	130.0	130.0
32"	78"	100.0	130.0	130.0
36"		100.0	130.0	130.0
40"		100.0	130.0	130.0
44"		100.0	130.0	130.0
48"		100.0	130.0	130.0
52"		100.0	130.0	130.0
56"		100.0	130.0	130.0
60"		100.0	130.0	130.0
32"	84"	100.0	130.0	130.0
36"		100.0	130.0	130.0
40"		100.0	130.0	130.0
44"		100.0	130.0	130.0
48"		96.5	130.0	130.0
52"		91.0	130.0	130.0
56"		86.5	130.0	130.0
60"		55.0	130.0	130.0
32"	90"	100.0	130.0	130.0
36"		100.0	130.0	130.0
40"		95.4	130.0	130.0
44"		88.1	130.0	130.0
48"		82.1	130.0	130.0
52"		77.2	130.0	130.0
56"		55.0	130.0	130.0
60"		52.8	124.6	124.8
32"	96"	100.0	130.0	130.0
36"		90.7	130.0	130.0
40"		82.5	130.0	130.0
44"		76.0	130.0	130.0
48"		70.7	127.1	130.0
52"		55.0	119.2	130.0
56"		53.0	112.7	125.4
60"		49.5	107.2	117.0
32"	98"	96.5		
36"		86.6		
40"		78.8		
44"		72.5		
48"		67.4		

MULLION LOAD CAPACITY – PSF
MULLIONS WITHOUT INTERMEDIATE HORIZONTALS

NOMINAL DIMS.		WITHOUT REINF.	LIGHT REINF.	HEAVY REINF.
WIDTH (W)	FRAME HEIGHT	EXT. (+) INT. (–)	EXT. (+) INT. (–)	EXT. (+) INT. (–)
32"	102"	55.0	130.0	130.0
36"		55.0	130.0	130.0
40"		55.0	130.0	130.0
44"		55.0	120.1	130.0
48"		55.0	111.5	130.0
52"		53.8	104.3	127.1
56"		49.9	98.4	118.0
32"	108"	55.0	130.0	130.0
36"		55.0	127.6	130.0
40"		55.0	115.9	130.0
44"		55.0	106.4	130.0
48"		52.4	98.6	130.0
52"		49.0	92.1	120.0
32"	114"	55.0	127.5	130.0
36"		55.0	114.1	130.0
40"		51.8	103.5	130.0
44"		47.6	94.9	130.0
48"		44.1	87.9	123.1
32"	120"	54.3	114.8	130.0
36"		48.7	102.7	130.0
40"		44.2	93.1	130.0
44"		40.6	85.3	119.4
48"		37.6	78.8	110.4

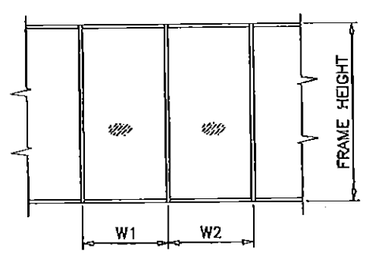

$$\text{WIDTH (W)} = \frac{W1 + W2}{2}$$

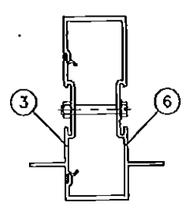

WITHOUT REINFORCING

Ix IN^4	Sx IN^3
4.7649	1.8627

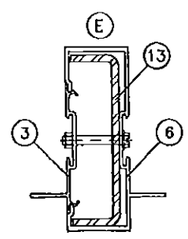

LIGHT REINFORCING

	Ix IN^4	Sx IN^3
ALUMINUM	4.7649	1.8627
STEEL	3.1584	1.3658
TOTAL Ix ALUM + Ix STL X 2.9	13.9234	

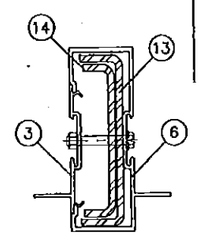

HEAVY REINFORCING

	Ix IN^4	Sx IN^3
ALUMINUM	4.7649	1.8627
STEEL	5.0811	2.1972
TOTAL Ix ALUM + Ix STL X 2.9	19.4992	

MULLION LOAD CAPACITY – PSF
MULLIONS WITH INTERMEDIATE HORIZONTALS

NOMINAL DIMS.		WITHOUT REINF.	LIGHT REINF.	HEAVY REINF.
WIDTH (W)	FRAME HEIGHT	EXT. (+) INT. (–)	EXT. (+) INT. (–)	EXT. (+) INT. (–)
32"	72"	100.0	130.0	130.0
36"		100.0	130.0	130.0
40"		100.0	130.0	130.0
44"		100.0	130.0	130.0
48"		100.0	130.0	130.0
52"		100.0	130.0	130.0
56"		100.0	130.0	130.0
60"		98.9	130.0	130.0
32"	78"	100.0	130.0	130.0
36"		100.0	130.0	130.0
40"		100.0	130.0	130.0
44"		100.0	130.0	130.0
48"		100.0	130.0	130.0
52"		96.2	130.0	130.0
56"		89.4	130.0	130.0
60"		83.4	130.0	130.0
32"	84"	100.0	130.0	130.0
36"		100.0	130.0	130.0
40"		100.0	130.0	130.0
44"		97.1	130.0	130.0
48"		89.0	130.0	130.0
52"		82.2	130.0	130.0
56"		76.3	130.0	130.0
60"		55.0	122.0	130.0
32"	90"	100.0	130.0	130.0
36"		100.0	130.0	130.0
40"		92.2	130.0	130.0
44"		83.8	130.0	130.0
48"		76.8	130.0	130.0
52"		70.9	122.7	130.0
56"		55.0	113.9	130.0
60"		52.8	106.3	124.8
32"	96"	100.0	130.0	130.0
36"		89.2	130.0	130.0
40"		80.3	130.0	130.0
44"		73.0	127.4	130.0
48"		66.9	116.8	130.0
52"		55.0	107.8	130.0
56"		53.0	100.1	125.4
60"		49.5	93.4	117.0
32"	98"	96.1		
36"		85.4		
40"		76.9		
44"		69.9		
48"		64.0		

MULLION LOAD CAPACITY – PSF
MULLIONS WITH INTERMEDIATE HORIZONTALS

NOMINAL DIMS.		WITHOUT REINF.	LIGHT REINF.	HEAVY REINF.
WIDTH (W)	FRAME HEIGHT	EXT. (+) INT. (–)	EXT. (+) INT. (–)	EXT. (+) INT. (–)
32"	102"	55.0	130.0	130.0
36"		55.0	130.0	130.0
40"		55.0	124.1	130.0
44"		55.0	112.9	130.0
48"		55.0	103.5	130.0
52"		52.9	95.5	127.1
56"		49.1	88.7	118.0
32"	108"	55.0	130.0	130.0
36"		55.0	123.0	130.0
40"		55.0	110.7	130.0
44"		52.8	100.7	130.0
48"		48.4	92.3	129.2
52"		44.7	85.2	119.3
32"	114"	55.0	124.2	130.0
36"		54.9	110.4	130.0
40"		49.4	99.4	130.0
44"		44.9	90.3	126.5
48"		41.2	82.8	116.0
32"	120"	52.9	112.1	130.0
36"		47.1	99.7	130.0
40"		42.3	89.7	125.6
44"		38.5	81.5	114.2
48"		35.3	74.7	104.7

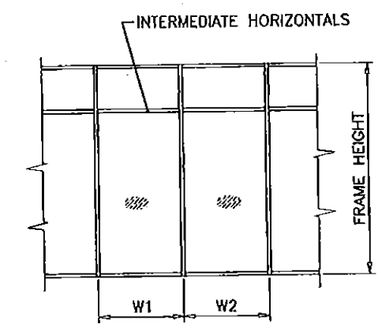

$$\text{WIDTH (W)} = \frac{W1 + W2}{2}$$

NOTE:
LIMIT ALL EXT.(+) LOADS SHOWN ON THIS SHEET TO +100.0 PSF

PRODUCT REVISED
as complying with the Florida Building Code
NOA-No. 15-0810.01
Expiration Date 11/15/2017
By
Miami-Dade Product Control

MAY 03 2016

JAVAD AHMAD
LICENSE
No. 70592
STATE OF FLORIDA
PROFESSIONAL ENGINEER

AL-FAROOQ CORPORATION
ENGINEERS & PRODUCT DEVELOPMENT
9360 SUNSET DRIVE, SUITE 220 (C.A.N. 3538)
MIAMI, FLORIDA 33173
TEL (305) 264-8100 FAX (305) 262-6978
STORE\W07-42DD

Series 'DHS-500' Windowall/Storefront Sys. (S.M.I.)

US Aluminum
Division Of C.R. Laurence Co., Inc.
7500 N.W. 69TH AVE.
MIAMI, FL 33166
TEL (305) 888-0077 FAX. (305) 884-3111

revisions:

no	date	by	description
C	08.05.08		MULLION CHART REV.
D	03.27.12		UPDATED TO 2010 FBC
E	09.01.12		REV. PER RER COMMENTS
F	07.01.15		NO CHANGE THIS SHEET
G	04.05.16		NO CHANGE THIS SHEET

date: 05-03-07
scale: 1/2" = 1"
dr. by: TARIQ
chk. by:

drowing no. W07-42

sheet 3 of 11

ANCHOR LOAD CAPACITY – PSF
EXT.(+) & INT.(–)

NOMINAL DIMS.		ANCHORS TYPE 'A'			ANCHORS TYPE 'B'			ANCHORS TYPE 'C'	
WIDTH (W)	FRAME HEIGHT	A2	A3	A4	B2	B3	B4	C2	C3
32"	72"	130.0	130.0	130.0	130.0	130.0	130.0	130.0	130.0
36"		130.0	130.0	130.0	130.0	130.0	130.0	130.0	130.0
40"		129.0	130.0	130.0	130.0	130.0	130.0	130.0	130.0
44"		117.3	130.0	130.0	126.4	130.0	130.0	130.0	130.0
45"		114.7	130.0	130.0	123.6	130.0	130.0	130.0	130.0
48"		107.5	130.0	130.0	115.8	130.0	130.0	130.0	130.0
52"		99.2	130.0	130.0	106.9	130.0	130.0	130.0	130.0
56"		92.1	98.5	98.5	98.5	98.5	98.5	98.5	98.5
60"		86.0	92.1	92.1	92.1	92.1	92.1	92.1	92.1
32"	78"	130.0	130.0	130.0	130.0	130.0	130.0	130.0	130.0
36"		130.0	130.0	130.0	130.0	130.0	130.0	130.0	130.0
40"		119.1	130.0	130.0	128.3	130.0	130.0	130.0	130.0
44"		108.3	130.0	130.0	116.6	130.0	130.0	130.0	130.0
45"		105.8	130.0	130.0	114.1	130.0	130.0	130.0	130.0
48"		99.2	130.0	130.0	106.9	130.0	130.0	130.0	130.0
52"		91.6	128.2	130.0	98.7	130.0	130.0	130.0	130.0
56"		85.1	98.5	98.5	91.6	98.5	98.5	98.5	98.5
60"		79.4	92.1	92.1	85.5	92.1	92.1	92.1	92.1
32"	84"	130.0	130.0	130.0	130.0	130.0	130.0	130.0	130.0
36"		122.9	130.0	130.0	130.0	130.0	130.0	130.0	130.0
40"		110.6	130.0	130.0	119.1	130.0	130.0	130.0	130.0
44"		100.5	130.0	130.0	108.3	130.0	130.0	130.0	130.0
45"		98.3	130.0	130.0	105.9	130.0	130.0	130.0	130.0
48"		92.1	129.0	130.0	99.3	130.0	130.0	130.0	130.0
52"		85.1	119.1	130.0	91.6	128.3	130.0	128.9	130.0
56"		79.0	98.5	98.5	85.1	98.5	98.5	98.5	98.5
60"		73.7	92.1	92.1	79.4	92.1	92.1	92.1	92.1
32"	90"	129.0	130.0	130.0	130.0	130.0	130.0	130.0	130.0
36"		114.7	130.0	130.0	123.6	130.0	130.0	130.0	130.0
40"		103.2	130.0	130.0	111.2	130.0	130.0	130.0	130.0
44"		93.8	130.0	130.0	101.1	130.0	130.0	130.0	130.0
45"		91.7	128.4	130.0	98.8	130.0	130.0	130.0	130.0
48"		86.0	120.4	130.0	92.7	129.7	130.0	130.0	130.0
52"		79.4	111.1	130.0	85.5	119.8	130.0	120.3	130.0
56"		73.7	98.5	98.5	79.4	98.5	98.5	98.5	98.5
60"		68.8	92.1	92.1	74.1	92.1	92.1	92.1	92.1
32"	96"	120.9	130.0	130.0	130.0	130.0	130.0	130.0	130.0
36"		107.5	130.0	130.0	115.8	130.0	130.0	130.0	130.0
40"		96.8	130.0	130.0	104.3	130.0	130.0	130.0	130.0
44"		88.0	123.1	130.0	94.8	130.0	130.0	130.0	130.0
45"		86.0	120.4	130.0	92.7	129.7	130.0	130.0	130.0
48"		80.6	112.9	130.0	86.9	121.6	130.0	122.2	130.0
52"		74.4	104.2	130.0	80.2	112.3	130.0	112.8	130.0
56"		69.1	96.8	98.5	74.5	98.5	98.5	98.5	98.5
60"		64.5	90.3	92.1	69.5	92.1	92.1	92.1	92.1
32"	102"	113.8	130.0	130.0	122.6	130.0	130.0	130.0	130.0
36"		101.2	130.0	130.0	109.0	130.0	130.0	130.0	130.0
40"		91.1	127.5	130.0	98.1	130.0	130.0	130.0	130.0
44"		82.8	115.9	130.0	89.2	124.9	130.0	125.5	130.0
45"		80.9	113.3	130.0	87.2	122.1	130.0	122.7	130.0
48"		75.9	106.2	130.0	81.8	114.5	130.0	115.0	130.0
52"		70.0	98.1	126.1	75.5	105.7	130.0	106.2	130.0
56"		65.0	91.1	98.5	70.1	98.1	98.5	98.5	98.5

ANCHOR LOAD CAPACITY – PSF
EXT.(+) & INT.(–)

NOMINAL DIMS.		ANCHORS TYPE 'A'			ANCHORS TYPE 'B'			ANCHORS TYPE 'C'	
WIDTH (W)	FRAME HEIGHT	A2	A3	A4	B2	B3	B4	C2	C3
32"	108"	107.5	130.0	130.0	115.8	130.0	130.0	130.0	130.0
36"		95.6	130.0	130.0	103.0	130.0	130.0	130.0	130.0
40"		86.0	120.4	130.0	92.7	129.7	130.0	130.0	130.0
44"		78.2	109.5	130.0	84.2	117.9	130.0	118.5	130.0
45"		76.4	107.0	130.0	82.4	115.3	130.0	115.9	130.0
48"		71.7	100.3	129.0	77.2	108.1	130.0	108.6	130.0
52"		66.2	92.6	119.1	71.3	99.8	128.3	100.3	130.0
32"	114"	101.8	130.0	130.0	109.7	130.0	130.0	130.0	130.0
36"		90.5	126.7	130.0	97.5	130.0	130.0	130.0	130.0
40"		81.5	114.1	130.0	87.8	122.9	130.0	123.5	130.0
44"		74.1	103.7	130.0	79.8	111.7	130.0	112.2	130.0
45"		72.4	101.4	130.0	78.0	109.2	130.0	109.8	130.0
48"		67.9	95.1	122.2	73.2	102.4	130.0	102.9	130.0
32"	120"	96.8	130.0	130.0	104.3	130.0	130.0	130.0	130.0
36"		86.0	120.4	130.0	92.7	129.7	130.0	130.0	130.0
40"		77.4	108.4	130.0	83.4	116.8	130.0	117.3	130.0
44"		70.4	98.5	126.7	75.8	106.1	130.0	106.6	130.0
45"		68.8	96.3	123.8	74.1	103.8	130.0	104.3	130.0
48"		64.5	90.3	116.1	69.5	97.3	125.1	97.8	130.0

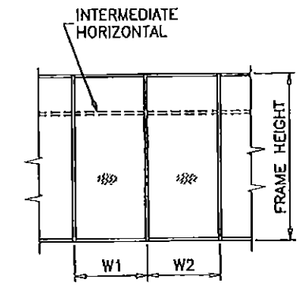

WIDTH (W) = $\frac{W1 + W2}{2}$ (MULLION)

ANCHORS TYPES: SEE SHEET 7 FOR DESCRIPTION & SHEET 1 FOR INSTRUCTIONS

A2 = (2) ANCHORS TYPE 'A' AT EACH SIDE OF MULLION
B2 = (2) ANCHORS TYPE 'B' AT EACH SIDE OF MULLION
C2 = (2) ANCHORS TYPE 'C' AT EACH SIDE OF MULLION

A3 = (3) ANCHORS TYPE 'A' AT EACH SIDE OF MULLION
B3 = (3) ANCHORS TYPE 'B' AT EACH SIDE OF MULLION
C3 = (3) ANCHORS TYPE 'C' AT EACH SIDE OF MULLION

A4 = (4) ANCHORS TYPE 'A' AT EACH SIDE OF MULLION
B4 = (4) ANCHORS TYPE 'B' AT EACH SIDE OF MULLION

ALL OTHER ANCHORS TO BE SPACED AS PER ELEVATION.

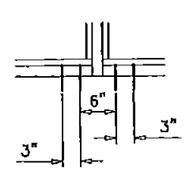

A2, B2, C2

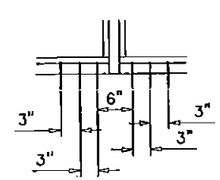

A3, B3, C3

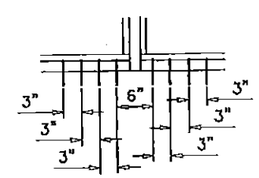

A4, B4

PRODUCT REVISED
as complying with the Florida Building Code
NOA-No. 15-0810.01
Expiration Date 11/15/2017
By
Miami-Dade Product Control

MAY 0 3 2016

JAVAD AHMAD
LICENSE
No. 70592
STATE OF FLORIDA
PROFESSIONAL ENGINEER

AL-FAROOQ CORPORATION
ENGINEERS & PRODUCT DEVELOPMENT
9360 SUNSET DRIVE, SUITE 220
MIAMI, FLORIDA 33173 (C.A.N. 3538)
TEL. (305) 264-9100 FAX. (305) 262-6978
STORE\W07-42DD

Series 'DHS-500' Windowall/Storefront Sys. (S.M.I.)

US Aluminum
Division Of C.R. Laurence Co., Inc.
7500 N.W. 69TH AVE.
MIAMI, FL 33166
TEL. (305) 888-0077 FAX. (305) 884-3111

revisions:

no	date	by	description
C	08.06.08		NO CHANGE THIS SHEET
D	03.27.12		UPDATED TO 2010 FBC
E	09.01.12		REV. PER RER COMMENTS
F	07.01.15		UPDATED TO 2014 FBC
G	04.05.16		NO CHANGE THIS SHEET

date: 05-03-07
scale: 1/2" = 1"
dr. by: TARIQ
chk. by:

drawing no.
W07-42

DOOR MULLION LOAD CAPACITY-PSF					
WIDTH (W) INCHES	FRAME HEIGHT INCHES	WITHOUT REINF. EXT. (+) INT. (-)	LIGHT REINF. EXT. (+) INT. (-)	MEDIUM REINF. EXT. (+) INT. (-)	HEAVY REINF. EXT. (+) INT. (-)
30	82	75.0	100.0	100.0	100.0
33		75.0	100.0	100.0	100.0
36		75.0	100.0	100.0	100.0
39		75.0	100.0	100.0	100.0
42		75.0	100.0	100.0	100.0
45		75.0	100.0	100.0	100.0
48		75.0	100.0	100.0	100.0
51		75.0	100.0	100.0	100.0
54		75.0	100.0	100.0	100.0
57		75.0	100.0	100.0	100.0
60		74.5	95.9	100.0	100.0
30	86	75.0	100.0	100.0	100.0
33		75.0	100.0	100.0	100.0
36		75.0	100.0	100.0	100.0
39		75.0	100.0	100.0	100.0
42		75.0	100.0	100.0	100.0
45		75.0	100.0	100.0	100.0
48		75.0	100.0	100.0	100.0
51		75.0	100.0	100.0	100.0
54		74.7	96.9	100.0	100.0
57		70.8	91.8	100.0	100.0
60		–	87.2	100.0	100.0
30	92	75.0	100.0	100.0	100.0
33		75.0	100.0	100.0	100.0
36		75.0	100.0	100.0	100.0
39		75.0	100.0	100.0	100.0
42		75.0	100.0	100.0	100.0
45		75.0	100.0	100.0	100.0
48		72.8	95.3	100.0	100.0
51		68.5	89.7	100.0	100.0
54		64.7	84.7	100.0	100.0
57		–	80.2	100.0	100.0
60		–	76.5	100.0	100.0
30	98	75.0	100.0	100.0	100.0
33		75.0	100.0	100.0	100.0
36		75.0	100.0	100.0	100.0
39		75.0	100.0	100.0	100.0
42		72.7	95.9	100.0	100.0
45		67.8	89.5	100.0	100.0
48		63.6	83.9	100.0	100.0
51		59.8	79.0	100.0	100.0
54		–	74.6	100.0	100.0
57		–	70.7	96.7	100.0
60		–	67.2	91.9	100.0
30	104	75.0	100.0	100.0	100.0
33		75.0	100.0	100.0	100.0
36		74.6	99.4	100.0	100.0
39		68.9	91.7	100.0	100.0
42		64.0	85.2	100.0	100.0
45		59.7	79.5	100.0	100.0
48		56.0	74.5	100.0	100.0
51		–	70.2	96.0	100.0
54		–	66.3	90.7	100.0
57		–	62.6	85.9	100.0
60		–	59.6	81.6	100.0

DOOR MULLION LOAD CAPACITY-PSF					
WIDTH (W) INCHES	FRAME HEIGHT INCHES	WITHOUT REINF. EXT. (+) INT. (-)	LIGHT REINF. EXT. (+) INT. (-)	MEDIUM REINF. EXT. (+) INT. (-)	HEAVY REINF. EXT. (+) INT. (-)
30	110	75.0	100.0	100.0	100.0
33		69.7	96.9	100.0	100.0
36		63.9	88.8	100.0	100.0
39		59.0	82.0	100.0	100.0
42		54.8	76.1	100.0	100.0
45		51.1	71.1	97.2	100.0
48		–	66.6	91.2	100.0
51		–	62.7	85.8	100.0
54		–	59.2	81.0	100.0
57		–	56.1	76.8	97.6
60		–	53.3	72.9	92.7
30	116	–	95.9	100.0	100.0
33		–	87.1	100.0	100.0
36		–	79.9	100.0	100.0
39		–	73.7	100.0	100.0
42		–	68.5	93.7	100.0
45		–	63.9	87.4	100.0
48		–	59.9	82.0	100.0
51		–	56.4	77.2	98.1
54		–	53.3	72.9	92.6
57		–	50.5	69.0	87.7
60		–	47.9	65.6	83.4
30	120	–	89.6	100.0	100.0
33		–	81.4	100.0	100.0
36		–	74.7	100.0	100.0
39		–	68.9	94.3	100.0
42		–	64.0	87.6	100.0
45		–	59.7	81.7	100.0
48		–	56.0	76.6	97.4
51		–	52.7	72.1	91.6
54		–	49.8	68.1	86.6
57		–	47.1	64.5	82.0
60		–	44.8	61.3	77.9

PRODUCT REVISED
as complying with the Florida Building Code
NOA-No. 15-0810.01
Expiration Date 11/15/2017
By
Miami-Dade Product Control

TOTAL NO. OF ANCHORS AT DOOR MULLION HEAD				
SUBSTRATE	WITHOUT REINF.	LIGHT REINF.	MEDIUM REINF.	HEAVY REINF.
WOOD	6	7	9	10
CONCRETE	5	6	7	8
METAL	4	5	5	6

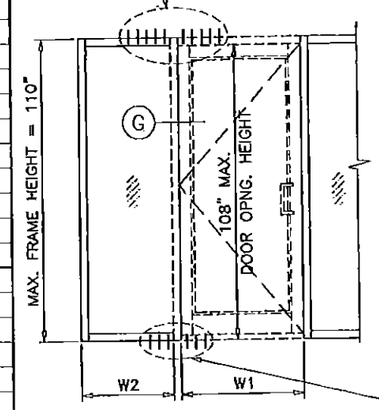

$$WIDTH\ (W) = \frac{W1 + W2}{2} + 1.75$$

US ALUMINUM SERIES DH-350 ENTRANCE DOORS SEE SEPARATE NOA

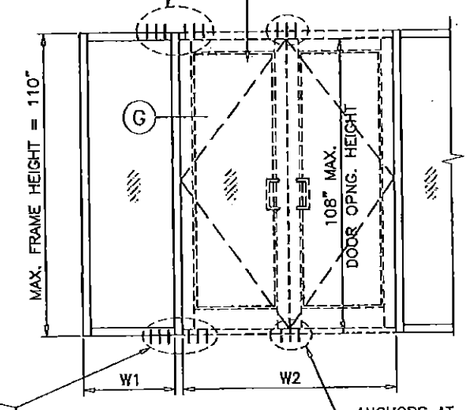

$$WIDTH\ (W) = \frac{W1}{2} + \frac{W2}{4} + 1.75$$

ANCHORS AT MTG. STILES SEE DOOR NOA

TOTAL NO. OF ANCHORS AT DOOR MULLION SILL				
SUBSTRATE	WITHOUT REINF.	LIGHT REINF.	MEDIUM REINF.	HEAVY REINF.
CONCRETE	5	6	7	8

US ALUMINUM SERIES DH-350 ENTRANCE DOORS SEE SEPARATE NOA

TOTAL NO. OF ANCHORS AT DOOR MULLION HEAD				
SUBSTRATE	WITHOUT REINF.	LIGHT REINF.	MEDIUM REINF.	HEAVY REINF.
WOOD	6	7	9	10
CONCRETE	5	6	7	8
METAL	4	5	5	6

TOTAL NO. OF ANCHORS AT DOOR MULLION SILL				
SUBSTRATE	WITHOUT REINF.	LIGHT REINF.	MEDIUM REINF.	HEAVY REINF.
CONCRETE	5	6	7	8

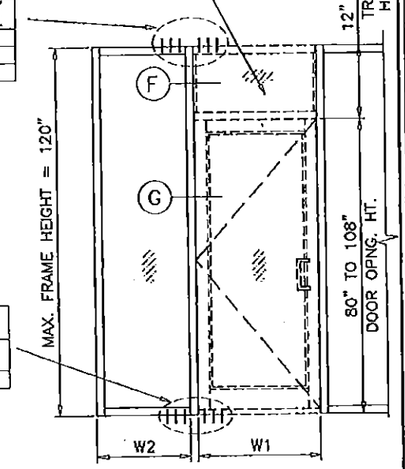

$$WIDTH\ (W) = \frac{W1 + W2}{2} + 1.75$$

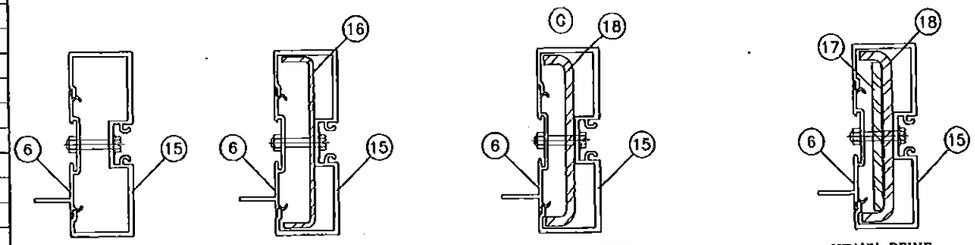

WITHOUT REINF.

Ix IN^4	Sx IN^3
4.9848	1.9567

LIGHT REINF.

	Ix IN^4	Sx IN^3
ALUMINUM	4.9848	1.9567
STEEL	1.8775	.8119
TOTAL Ix ALUM + Ix STL X 2.9	10.4296	

MEDIUM REINF.

	Ix IN^4	Sx IN^3
ALUMINUM	4.9848	1.9567
STEEL	3.2021	1.3847
TOTAL Ix ALUM + Ix STL X 2.9	14.2709	

HEAVY REINF.

	Ix IN^4	Sx IN^3
ALUMINUM	4.9848	1.9567
STEEL	4.5354	1.9614
TOTAL Ix ALUM + Ix STL X 2.9	18.1375	

MAY 0 3 2016

JAVAD AHMAD
LICENSE
No. 70592
STATE OF FLORIDA
PROFESSIONAL ENGINEER

AL-FAROOQ CORPORATION
ENGINEERS & PRODUCT DEVELOPMENT
9360 SUNSET DRIVE, SUITE 220
MIAMI, FLORIDA 33173 (C.A.N. 3538)
TEL. (305) 264-8100 FAX. (305) 262-6978
STORE\W07-42DD

Series "DHS-500" Windowall/Storefront Sys. (S.M.I.)

US Aluminum
Division Of C.R. Laurence Co., Inc.
7500 N.W. 69TH AVE.
MIAMI, FL 33166
TEL. (305) 888-0077 FAX. (305) 884-3111

revisions:

no.	date	by	description
C	08.06.08		NO CHANGE THIS SHEET
D	03.27.12		UPDATED TO 2010 FBC
E	09.01.12		REV. PER RER COMMENTS
F	07.01.15		UPDATED TO 2014 FBC
G	04.05.16		NO CHANGE THIS SHEET

date: 05-03-07
scale: 1/2" = 1"
dr. by: TARIQ
chk. by:

drawing no.
W07-42

sheet 5 of 11

DOOR MULLION LOAD CAPACITY – PSF

NOMINAL DIMS.			LIGHT REINF.	MEDIUM REINF.	HEAVY REINF.
FRAME HEIGHT INCHES	WIDTH (W1) INCHES	WIDTH (W2) INCHES	EXT. (+) INT. (–)	EXT. (+) INT. (–)	EXT. (+) INT. (–)
90	60	46–1/4	100.0	100.0	100.0
		52–1/4	100.0	100.0	100.0
		58–1/4	97.1	100.0	100.0
		64–1/4	91.5	100.0	100.0
	64	46–1/4	100.0	100.0	100.0
		52–1/4	100.0	100.0	100.0
		58–1/4	94.7	100.0	100.0
		64–1/4	89.4	100.0	100.0
	72	46–1/4	100.0	100.0	100.0
		52–1/4	95.7	100.0	100.0
		58–1/4	90.3	100.0	100.0
		64–1/4	85.4	100.0	100.0
	84	46–1/4	94.3	100.0	100.0
		52–1/4	89.1	100.0	100.0
		58–1/4	84.4	100.0	100.0
		64–1/4	80.1	100.0	100.0
96	60	46–1/4	93.3	100.0	100.0
		52–1/4	87.5	100.0	100.0
		58–1/4	82.4	100.0	100.0
		64–1/4	77.8	100.0	100.0
	64	46–1/4	90.6	100.0	100.0
		52–1/4	85.1	100.0	100.0
		58–1/4	80.2	100.0	100.0
		64–1/4	75.9	100.0	100.0
	72	46–1/4	85.6	100.0	100.0
		52–1/4	80.7	100.0	100.0
		58–1/4	76.3	100.0	100.0
		64–1/4	72.4	99.0	100.0
	84	46–1/4	79.1	100.0	100.0
		52–1/4	74.8	100.0	100.0
		58–1/4	71.1	97.2	100.0
		64–1/4	67.6	92.6	100.0
102	60	46–1/4	79.8	100.0	100.0
		52–1/4	75.0	100.0	100.0
		58–1/4	70.8	96.9	100.0
		64–1/4	67.0	91.6	100.0
	64	46–1/4	77.4	100.0	100.0
		52–1/4	72.9	99.7	100.0
		58–1/4	68.9	94.2	100.0
		64–1/4	65.3	89.3	100.0
	72	46–1/4	73.0	99.9	100.0
		52–1/4	68.9	94.3	100.0
		58–1/4	65.3	89.4	100.0
		64–1/4	62.1	85.0	100.0
	84	46–1/4	67.2	91.9	100.0
		52–1/4	63.8	87.3	100.0
		58–1/4	60.7	83.0	100.0
		64–1/4	57.9	79.2	100.0

DOOR MULLION LOAD CAPACITY – PSF

NOMINAL DIMS.			LIGHT REINF.	MEDIUM REINF.	HEAVY REINF.
FRAME HEIGHT INCHES	WIDTH (W1) INCHES	WIDTH (W2) INCHES	EXT. (+) INT. (–)	EXT. (+) INT. (–)	EXT. (+) INT. (–)
108	60	46–1/4	69.1	94.5	100.0
		52–1/4	65.1	89.0	100.0
		58–1/4	61.5	84.1	100.0
		64–1/4	58.3	79.7	100.0
	64	46–1/4	66.9	91.5	100.0
		52–1/4	63.1	86.4	100.0
		58–1/4	59.8	81.8	100.0
		64–1/4	56.7	77.6	98.6
	72	46–1/4	63.0	86.1	100.0
		52–1/4	59.6	81.5	100.0
		58–1/4	56.6	77.4	98.4
		64–1/4	53.9	73.7	93.7
	84	46–1/4	57.8	79.1	100.0
		52–1/4	55.0	75.2	95.6
		58–1/4	52.4	71.7	91.2
114	60	46–1/4	60.4	82.6	100.0
		52–1/4	57.0	77.9	99.1
		58–1/4	53.9	73.8	93.8
		64–1/4	51.1	70.0	88.9
	64	46–1/4	58.4	80.0	100.0
		52–1/4	55.2	75.6	96.0
		58–1/4	52.3	71.6	91.0
		64–1/4	49.7	68.1	86.5
	72	46–1/4	54.9	75.1	95.4
		52–1/4	52.0	71.2	90.5
		58–1/4	49.5	67.7	86.0
		64–1/4	47.2	64.5	82.0
	84	46–1/4	50.3	68.8	87.4
		52–1/4	47.9	65.5	83.3
120	60	46–1/4	53.2	72.8	92.6
		52–1/4	50.3	68.8	87.4
		58–1/4	47.7	65.2	82.9
		64–1/4	45.3	61.9	78.7
	64	46–1/4	51.5	70.4	89.5
		52–1/4	48.7	66.6	84.7
		58–1/4	46.2	63.3	80.4
		64–1/4	44.0	60.2	76.5
	72	46–1/4	48.2	66.0	83.9
		52–1/4	45.8	62.7	79.7
		58–1/4	43.6	59.7	75.9
	84	46–1/4	44.1	60.3	76.7

	TOTAL NO. OF ANCHORS REQD. AT DOOR MULLION HEAD			
	UPTO 75 PSF		UPTO 100 PSF	
SUBSTRATE	NO. AT TRANSOM	NO. AT FIX. LITE	NO. AT TRANSOM	NO. AT FIX. LITE
WOOD	4	4	5	5
CONCRETE	3	4	4	4
METAL	3	3	3	4

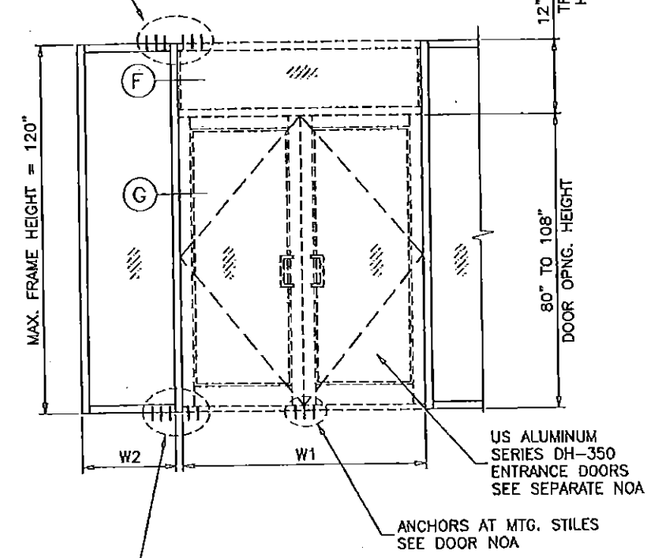

	TOTAL NO. OF ANCHORS REQD. AT DOOR MULLION SILL			
	UPTO 75 PSF		UPTO 100 PSF	
SUBSTRATE	NO. AT DOOR	NO. AT FIX. LITE	NO. AT DOOR	NO. AT FIX. LITE
CONCRETE	3	4	4	4

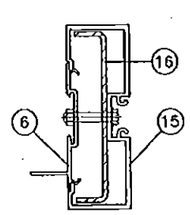

LIGHT REINF.

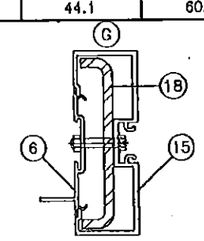

MEDIUM REINF.

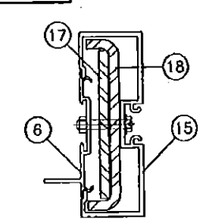

HEAVY REINF.

	Ix IN^4	Sx IN^3
ALUMINUM	4.9848	1.9567
STEEL	1.8775	.8119
TOTAL Ix ALUM + Ix STL X 2.9	10.4296	

	Ix IN^4	Sx IN^3
ALUMINUM	4.9848	1.9567
STEEL	3.2021	1.3847
TOTAL Ix ALUM + Ix STL X 2.9	14.2709	

	Ix IN^4	Sx IN^3
ALUMINUM	4.9848	1.9567
STEEL	4.5354	1.9614
TOTAL Ix ALUM + Ix STL X 2.9	18.1375	

PRODUCT REVISED
as complying with the Florida Building Code
NOA-No. 15-0810.01
Expiration Date 11/15/2017
By
Miami-Dade Product Control

MAY 0 3 2013

JAVAD AHMAD
LICENSE
No. 70592
STATE OF FLORIDA
PROFESSIONAL ENGINEER

AL-FAROOQ CORPORATION
ENGINEERS & PRODUCT DEVELOPMENT
9360 SUNSET DRIVE, SUITE 220
MIAMI, FLORIDA 33173 (C.A.N. 3538)
TEL. (305) 264-3100 FAX. (305) 262-6978

STORE\W07-42DD

Series 'DHS-500' Windowall/Storefront Sys. (S.M.L.)

US Aluminum
Division Of C.R. Laurence Co., Inc.
7500 N.W. 69TH AVE.
MIAMI, FL 33166
TEL. (305) 884-0077 FAX. (305) 884-3111

revisions:

no	date	by	description
C	08.05.08		NO CHANGE THIS SHEET
D	03.27.12		UPDATED TO 2010 FBC
E	09.01.12		REV. PER RER COMMENTS
F	07.01.15		UPDATED TO 2014 FBC
G	04.05.16		NO CHANGE THIS SHEET

date: 05-03-07
scale: 1/2" = 1"
dr. by: TARIQ
chk. by:

drawing no.
W07-42

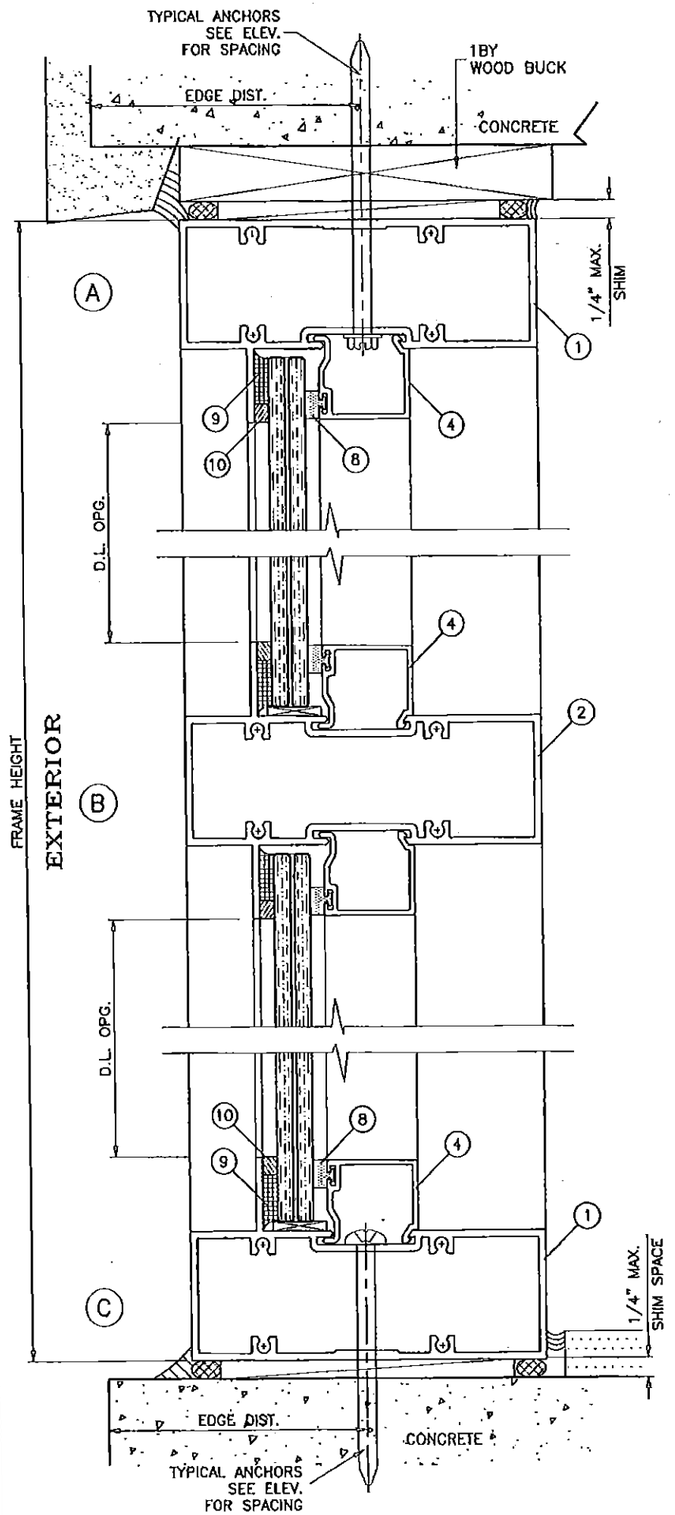

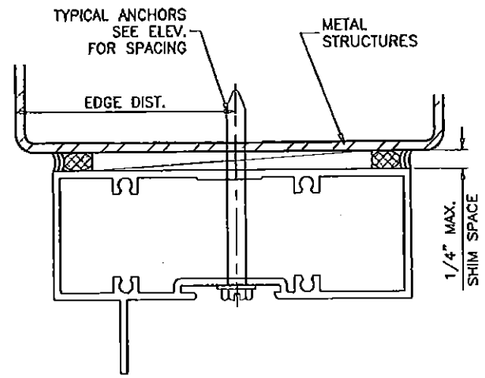

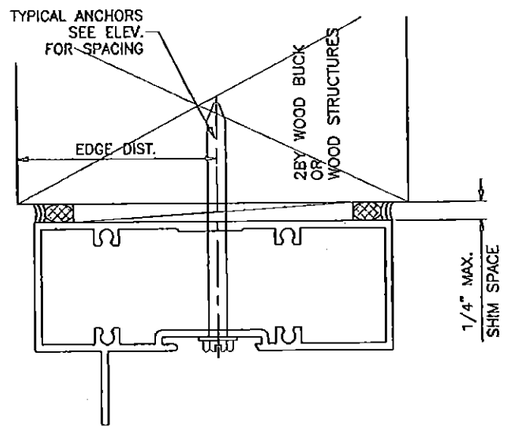

ALTERNATE FRAME INSTALLATIONS SEE TYPICAL ANCHOR NOTES.

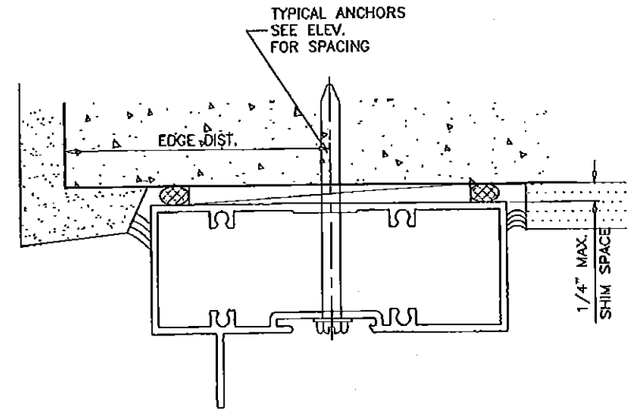

WOOD BUCKS AND METAL STRUCTURES NOT BY US ALUMINUM MUST SUPPORT LOADS IMPOSED BY GLAZING SYSTEM AND TRANSFER THEM TO THE BUILDING STRUCTURE.

TYPICAL ANCHORS: SEE ELEV. FOR SPACING

TYPE 'A'– 1/4" DIA. ULTRACON BY 'ELCO' (Fu=177 KSI, Fy=155 KSI)
INTO 2BY WOOD BUCKS OR WOOD STRUCTURES
1–1/2" MIN. PENETRATION INTO WOOD (HEAD/SILL/JAMBS)

THRU 1BY BUCKS INTO CONC. OR MASONRY
1–1/4" MIN. EMBED INTO CONCRETE (HEAD/SILL)
1–1/4" MIN. EMBED INTO CONC. OR MASONRY (JAMBS)

TYPE 'B'– 1/4" DIA. ULTRACON BY 'ELCO' (Fu=177 KSI, Fy=155 KSI)
DIRECTLY INTO CONC. OR MASONRY
1–3/8" MIN. EMBED INTO CONCRETE (HEAD/SILL)
1–1/4" MIN. EMBED INTO CONC. OR MASONRY (JAMBS)

TYPE 'C'– #14 SMS OR SELF DRILLING SCREWS (GRADE 2 CRS)
INTO METAL STRUCTURES
STEEL : 1/8" THK. MIN. (Fy = 36 KSI MIN.)
ALUMINUM : 1/8" THK. MIN. (6063–T5 MIN.)
(STEEL IN CONTACT WITH ALUMINUM TO BE PLATED OR PAINTED)

TYPICAL EDGE DISTANCE
INTO CONCRETE AND MASONRY = 2–1/2" MIN.
INTO WOOD STRUCTURE = 1" MIN.
INTO METAL STRUCTURE = 3/4" MIN.

WOOD AT HEAD, SILL OR JAMBS SG = 0.55 MIN.
CONCRETE AT HEAD, SILL OR JAMBS f'c = 3000 PSI MIN.
C–90 HOLLOW/FILLED BLOCK AT JAMBS f'm = 2000 PSI MIN.

PRODUCT REVISED
as complying with the Florida Building Code
NOA–No. 15-0810.01
Expiration Date 11/15/2017
By
Miami–Dade Product Control

MAY 03 2018

JAVAD AHMAD
LICENSE
No. 70592
STATE OF FLORIDA
PROFESSIONAL ENGINEER

AL-FAROOQ CORPORATION
ENGINEERS & PRODUCT DEVELOPMENT
9360 SUNSET DRIVE, SUITE 220
MIAMI, FLORIDA 33173 (C.A.N. 3538)
TEL. (305) 264-8100 FAX. (305) 262-6978
STORE\W07–420D

Series 'DHS–500' Windowall/Storefront Sys. (S.M.I.)

US Aluminum
Division Of C.R. Laurence Co., Inc.
7500 N.W. 69TH AVE.
MIAMI, FL 33166
TEL. (305) 888–0077 FAX. (305) 884–3111

revisions:

no	date	by	description
C	08.06.08		NO CHANGE THIS SHEET
D	03.27.12		UPDATED TO 2010 FBC
E	09.01.12		REV. PER RER COMMENTS
F	07.01.15		UPDATED TO 2014 FBC
G	04.05.16		NO CHANGE THIS SHEET

date: 05–03–07
scale: 1/2" = 1"
dr. by: TARIQ
chk. by:

drawing no. W07–42

sheet 7 of 11

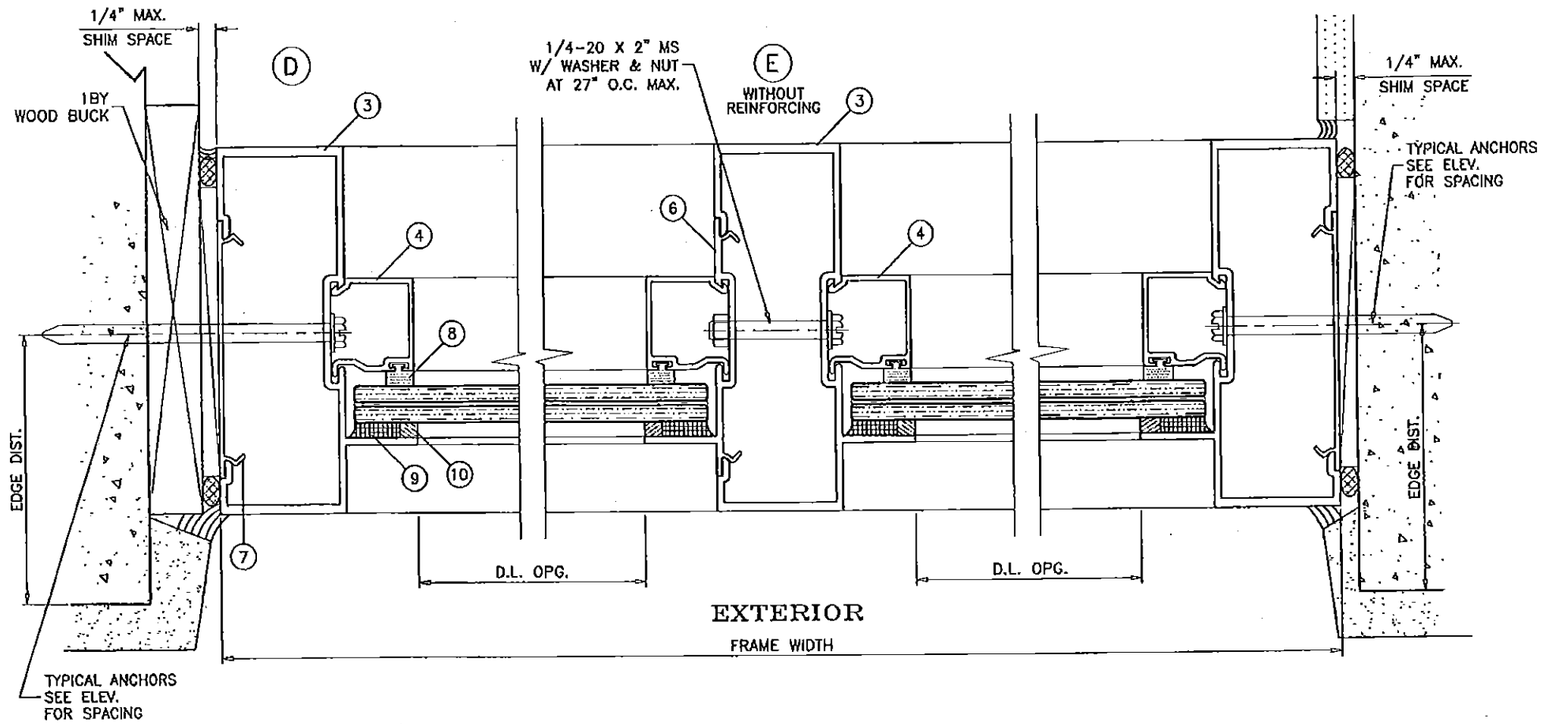

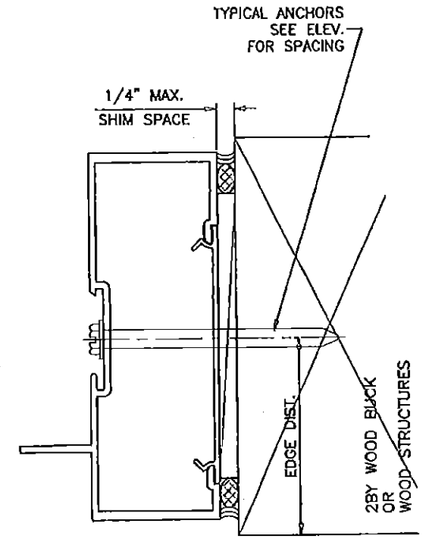

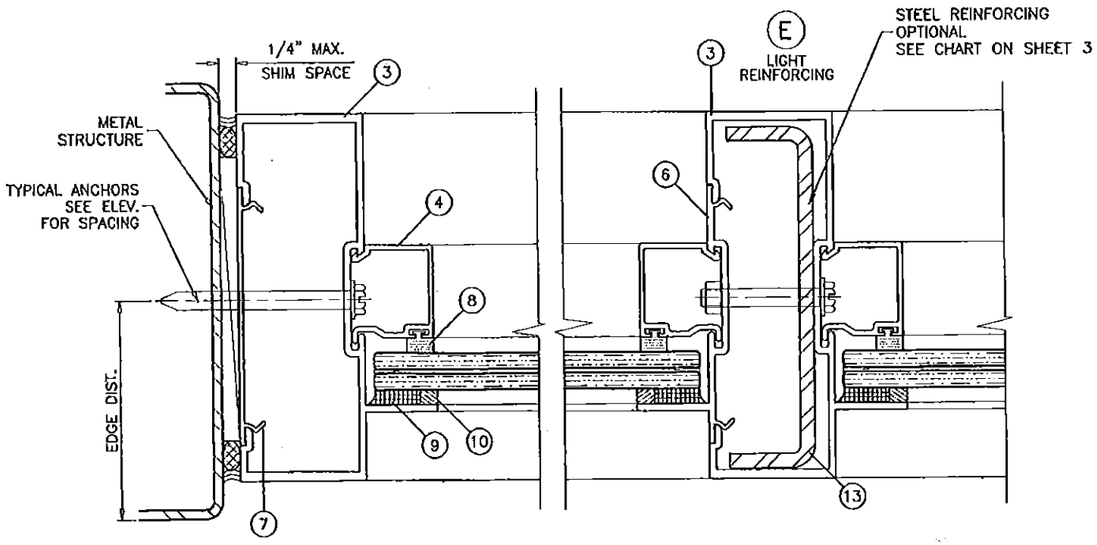

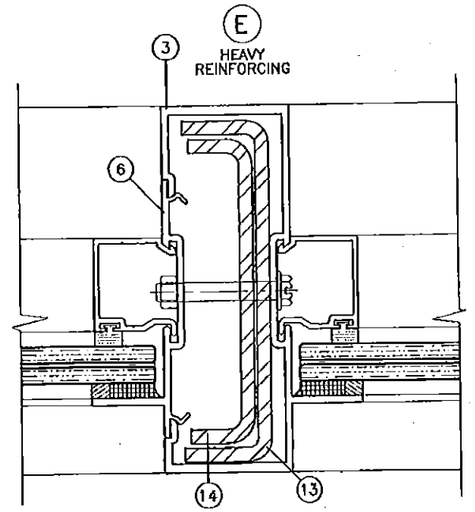

PRODUCT REVISED
as complying with the Florida Building Code
NOA-No. 15-0810.01
Expiration Date 11/15/2017
By
Miami-Dade Product Control

MAY 0 3 2018

JAVAD AHMAD
LICENSE
No. 70592
STATE OF FLORIDA
PROFESSIONAL ENGINEER

AL-FAROOQ CORPORATION
ENGINEERS & PRODUCT DEVELOPMENT.
9360 SUNSET DRIVE, SUITE 220
MIAMI, FLORIDA 33173 (C.A.N. 3538)
TEL. (305) 264-8200 FAX. (305) 262-6978
STORE\W07-42DD

Series 'DHS-500' Windowall/Storefront Sys. (S.M.L.)

US Aluminum
Division Of C.R. Laurence Co., Inc.
7500 N.W. 69TH AVE.
MIAMI, FL 33166
TEL. (305) 888-0077 FAX. (305) 884-3111

revisions:

no	date	by	description
C	08.06.08		NO CHANGE THIS SHEET
D	03.27.12		UPDATED TO 2010 FBC
E	09.01.12		NO CHANGE THIS SHEET
F	07.01.15		UPDATED TO 2014 FBC
G	04.05.16		NO CHANGE THIS SHEET

date: 05-03-07
scale: 1/2" = 1"
dr. by: TARIQ
chk. by:

drawing no.
W07-42

sheet 8 of 11

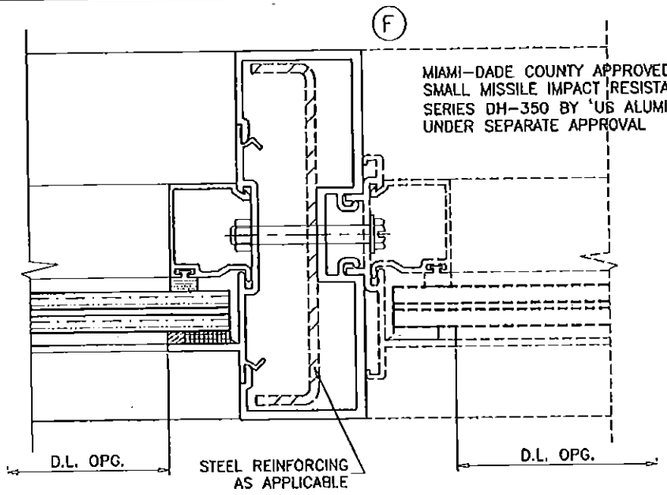

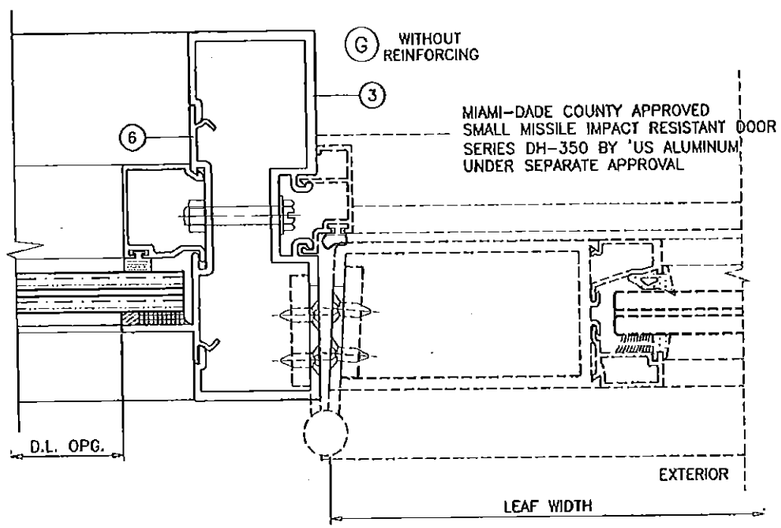

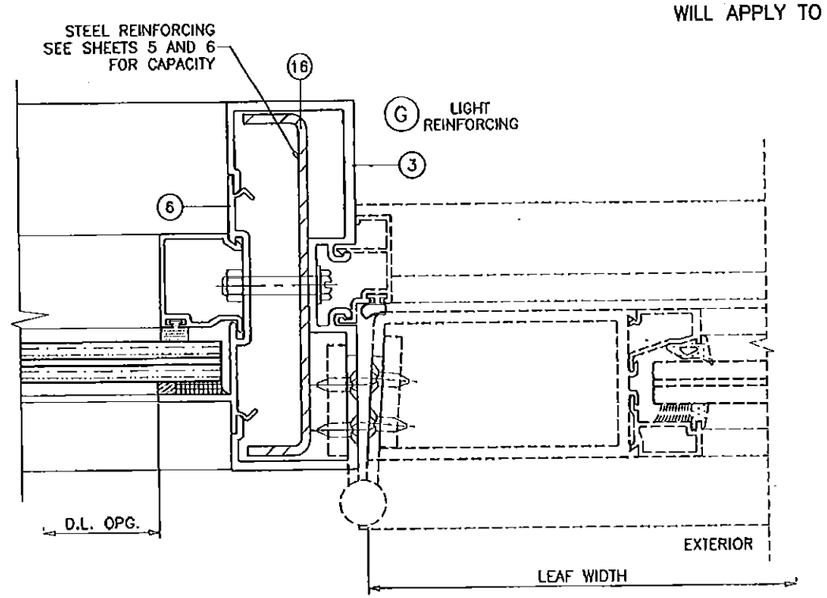

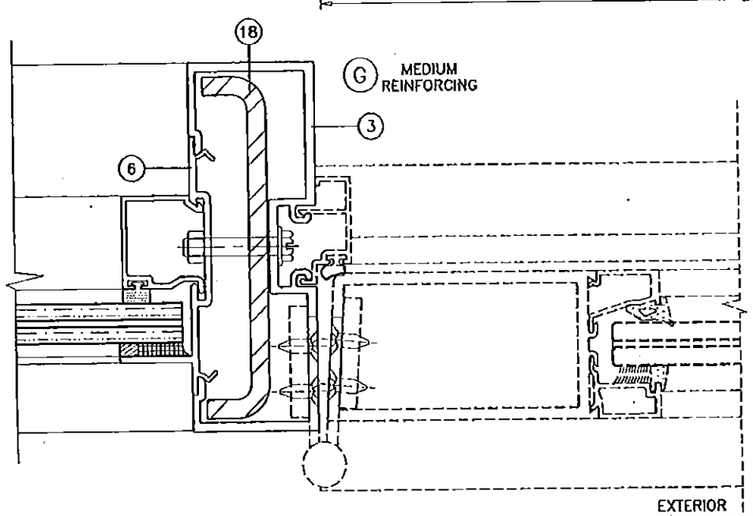

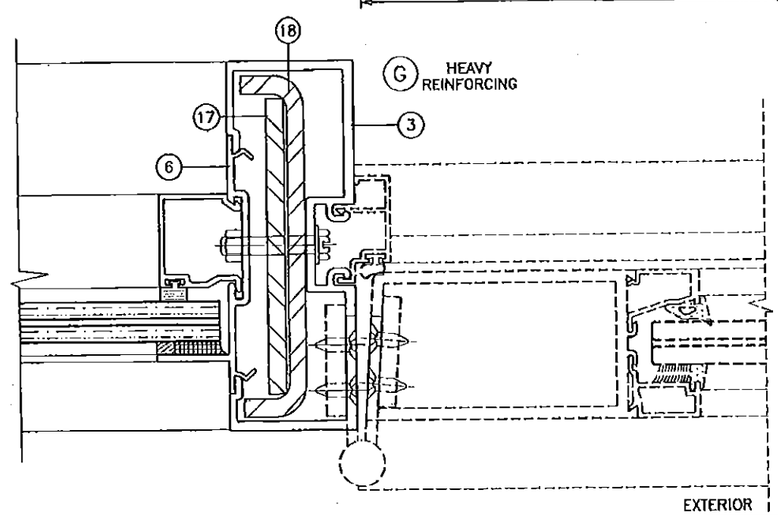

SEE SEPARATE U.S. ALUMINUM LMI/SMI DH-350 NOA
FOR DESIGN LOAD CAPACITY OF DOORS.

LOWER VALUES FROM DOORS NOA
OR STOREFRONT SYSTEM CAPACITY CHARTS
WILL APPLY TO ENTIRE SYSTEM.

PRODUCT REVISED
as complying with the Florida Building Code
NOA-No. 15-0810.01
Expiration Date 11/15/2017
By
Miami-Dade Product Control

MAY 0 3 2016

JAVAD AHMAD
LICENSE
No. 70592
STATE OF FLORIDA
PROFESSIONAL ENGINEER

AL-FAROOQ CORPORATION
ENGINEERS & PRODUCT DEVELOPMENT
9360 SUNSET DRIVE, SUITE 220
MIAMI, FLORIDA 33173 (C.A.N. 3538)
TEL. (305) 264-8100 FAX. (305) 262-6978

STORE\W07-42DD

Series 'DHS-500' Windowall/Storefront Sys. (S.M.I.)

US Aluminum
Division Of C.R. Laurence Co., Inc.
7500 N.W. 69TH AVE.
MIAMI, FL 33166
TEL. (305) 888-0077 FAX. (305) 884-3111

revisions:

no	date	by	description
C	08.06.08		NO CHANGE THIS SHEET
D	03.27.12		UPDATED TO 2010 FBC
E	09.01.12		REV. PER RER COMMENTS
F	07.01.15		NO CHANGE THIS SHEET
G	04.05.16		NO CHANGE THIS SHEET

date: 05-03-07
scale: 1/2" = 1"
dr. by: TARIQ
chk. by:

drawing no.
W07-42

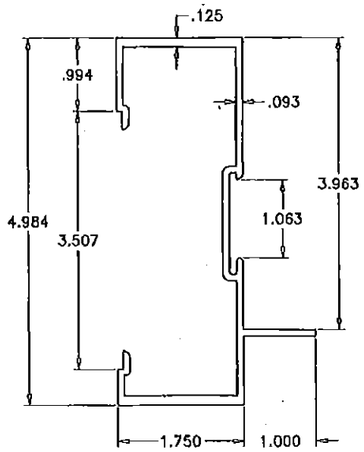

(3) FRAME JAMB/MULLION

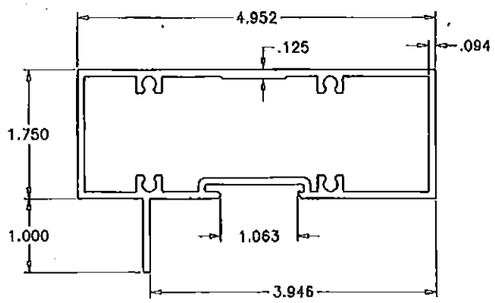

(1) FRAME HEAD/SILL

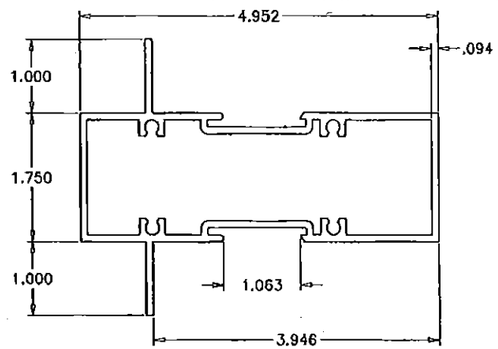

(2) FRAME HORIZONTAL

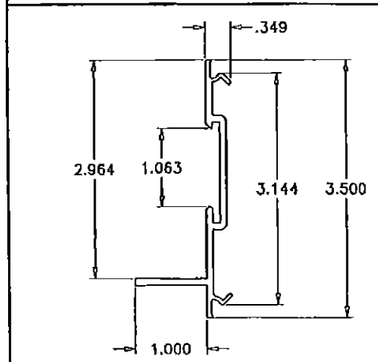

(6) POCKET FILLER

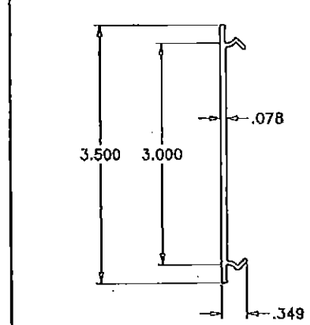

(7) SNAP IN COVER

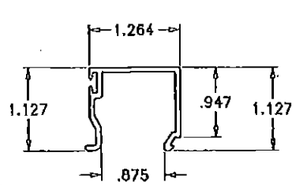

(4) GLAZING STOP

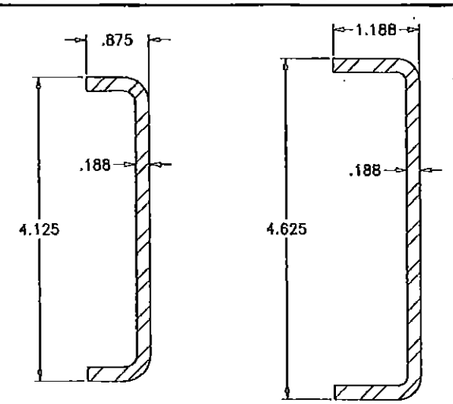

(14) STOREFRONT MULL REINF. CHANNELS (13)

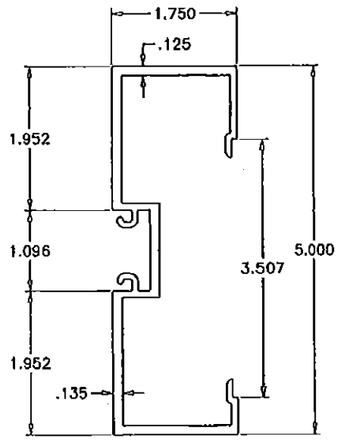

(15) DOOR MULLION

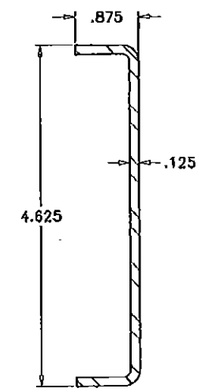

(16) DOOR MULL REINF. CHANNEL LIGHT

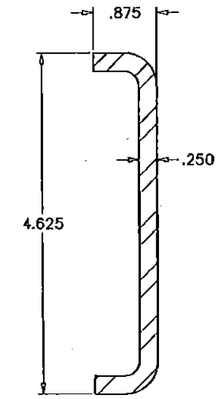

(18) DOOR MULL REINF. CHANNEL MEDIUM

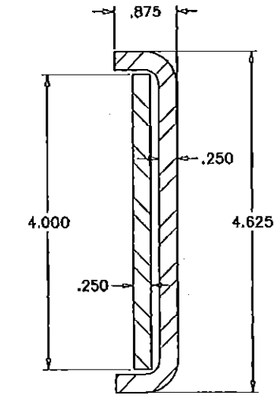

DOOR MULL REINF. BAR (17) REINF. CHANNEL (18) HEAVY

PRODUCT REVISED
as complying with the Florida Building Code
NOA-No. 15-0810.01
Expiration Date 11/15/2017
By
Miami-Dade Product Control

MAY 03 2016

JAVAD AHMAD
LICENSE
No. 70592
STATE OF FLORIDA
PROFESSIONAL ENGINEER

AL-FAROOQ CORPORATION
ENGINEERS & PRODUCT DEVELOPMENT
9360 SUNSET DRIVE, SUITE 220
MIAMI, FLORIDA 33173 (C.A.N. 3538)
TEL. (305) 264-8100 FAX. (305) 262-6978

STORE\W07-42DD

Series 'DHS-500' Windowall/Storefront Sys. (S.M.I.)

US Aluminum
Division Of C.R. Laurence Co., Inc.
7500 N.W. 69TH AVE.
MIAMI, FL 33166
TEL. (305) 888-0077 FAX. (305) 884-3111

revisions:

no	date	by	description
C	08.06.08		NO CHANGE THIS SHEET
D	03.27.12		UPDATED TO 2010 FBC
E	09.01.12		REV. PER RER COMMENTS
F	07.01.15		NO CHANGE THIS SHEET
G	04.05.16		NO CHANGE THIS SHEET

date: 05-03-07
scale: 1/2" = 1"
dr. by: TARIQ
chk. by:

drawing no. W07-42

ITEM NO.	PART NUMBER	QUANTITY	DESCRIPTION	MATERIAL	MANF./SUPPLIER/REMARKS
1	DLD-103	AS REQD.	FRAME HEAD/SILL	6063-T6	–
2	DLD-104	AS REQD.	FRAME HORIZONTAL	6063-T6	–
3	DLD-100	AS REQD.	FRAME JAMB/MULLION	6063-T6	–
4	DLD-102	AS REQD.	GLAZING STOP	6063-T5	–
6	DLD-101	AS REQD.	POCKET FILLER	6063-T6	–
7	BCE-475	AS REQD.	SNAP IN COVER, 2-1/2" LONG	6063-T6	–
8	–	AS REQD.	GLAZING GASKET	NEOPRENE	–
9	–	AS REQD.	GLAZING COMPOUND	SILICONE	DOW 995
10	–	AS REQD.	GLAZING TAPE	–	NORTON
11	–	AS REQD.	SETTING BLOCK AT 1/4" POINTS (1/8" X 3/4" X 2" LONG)	EPDM	DUROMETER 80±5 SHORE A
12	#12 X 1-1/2"	4/ CORNER	ASSEMBLY SCREWS PHSMS	STEEL	–
13	–	AS REQD.	MULLION REINFORCING CHANNEL	STEEL	36 KSI MIN.
14	–	AS REQD.	MULLION REINFORCING CHANNEL	STEEL	36 KSI MIN.
15	DLD-124	2/DOOR	DOOR MULLION	6063-T6	–
16	–	AS REQD.	REINFORCING CHANNEL (LIGHT)	STEEL	36 KSI MIN.
17	–	AS REQD.	REINFORCING CHANNEL (MEDIUM/HEAVY)	STEEL	36 KSI MIN.
18	–	AS REQD.	REINFORCING BAR (HEAVY)	STEEL	36 KSI MIN.

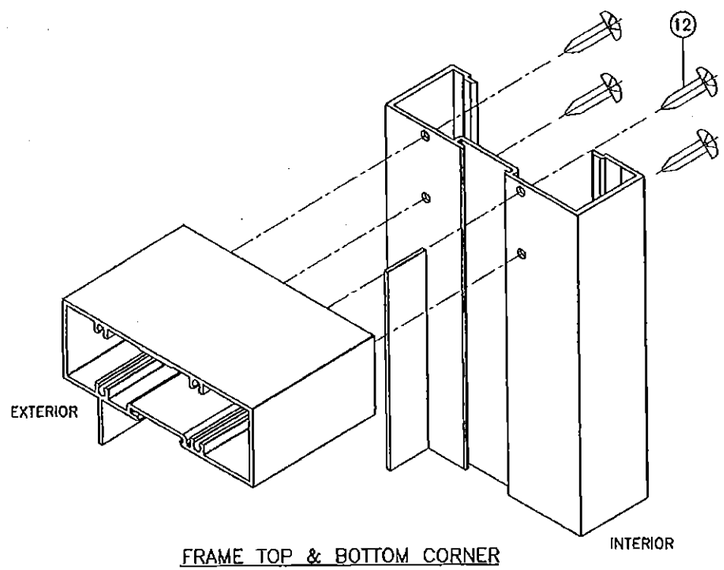

FRAME TOP & BOTTOM CORNER

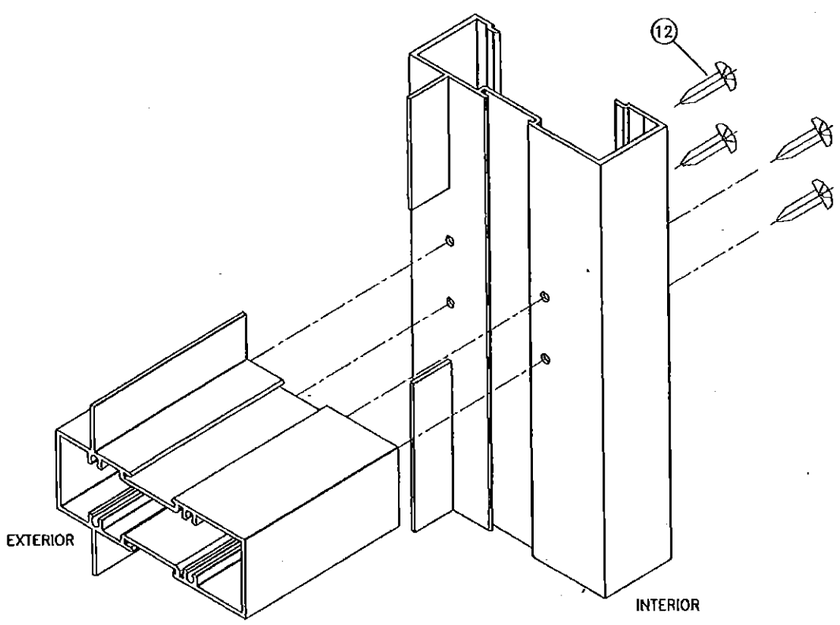

FRAME HORIZONTAL CORNER

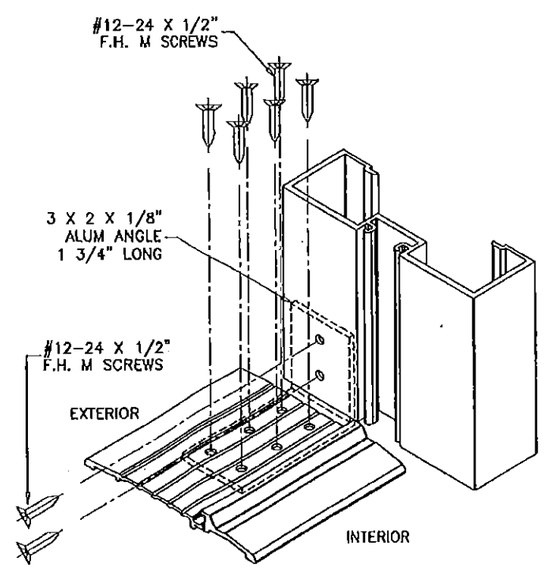

DOOR MULLION BOTTOM CORNER

PRODUCT REVISED
as complying with the Florida Building Code
NOA-No. 15-0810.01
Expiration Date 11/15/2017
By
Miami-Dade Product Control

MAY 0 3 2016

JAVAD AHMAD
LICENSE
No. 70592
STATE OF FLORIDA
PROFESSIONAL ENGINEER

AL-FAROOQ CORPORATION
ENGINEERS & PRODUCT DEVELOPMENT
9360 SUNSET DRIVE, SUITE 220
MIAMI, FLORIDA 33173 (C.A.N. 3538)
TEL. (305) 264-8100 FAX. (305) 262-6978

STORE\W07-42DD

Series 'DHS-500' Windowall/Storefront Sys. (S.M.I.)

US Aluminum
Division Of C.R. Laurence Co., Inc.
7500 N.W. 69TH AVE.
MIAMI, FL 33166
TEL. (305) 888-0077 FAX. (305) 884-3111

revisions:

no	date	by	description
C	08.06.08		NO CHANGE THIS SHEET
D	03.27.12		UPDATED TO 2010 FBC
E	09.01.12		REV. PER RER COMMENTS
F	07.01.15		UPDATED TO 2014 FBC
G	04.05.16		NO CHANGE THIS SHEET

date: 05-03-07
scale: 1/2" = 1"
dr. by: TARIQ
chk. by:

drawing no.
W07-42

sheet 11 of 11