MIAMI-DADE COUNTY
DEPARTMENT OF REGULATORY AND ECONOMIC RESOURCES (RER)
BOARD AND CODE ADMINISTRATION DIVISION

MIAMI-DADE COUNTY
PRODUCT CONTROL SECTION
11805 SW 26 Street, Room 208
T (786) 315-2590 F (786) 315-2599
www.miamidade.gov/economy

NOTICE OF ACCEPTANCE (NOA)

PGT Industries, Inc.
1070 Technology Drive
North Venice, FL 34275

SCOPE:

This NOA is being issued under the applicable rules and regulations governing the use of construction materials. The documentation submitted has been reviewed and accepted by Miami-Dade County RER - Product Control Section to be used in Miami Dade County and other areas where allowed by the Authority Having Jurisdiction (AHJ).

This NOA shall not be valid after the expiration date stated below. The Miami-Dade County Product Control Section (In Miami Dade County) and/or the AHJ (in areas other than Miami Dade County) reserve the right to have this product or material tested for quality assurance purposes. If this product or material fails to perform in the accepted manner, the manufacturer will incur the expense of such testing and the AHJ may immediately revoke, modify, or suspend the use of such product or material within their jurisdiction. RER reserves the right to revoke this acceptance, if it is determined by Miami-Dade County Product Control Section that this product or material fails to meet the requirements of the applicable building code.

This product is approved as described herein, and has been designed to comply with the Florida Building Code, including the High Velocity Hurricane Zone.

DESCRIPTION: Series "DH-5460" PVC Double Hung Window – N.I.

APPROVAL DOCUMENT: Drawing No. **MD-DH5460-01** titled "Double Hung Window Installation - NI", sheets 1 through 12 of 12, dated 05/15/15, prepared by manufacturer, signed and sealed by Anthony Lynn Miller, P.E., bearing the Miami-Dade County Product Control Approval stamp with the Notice of Acceptance number and approval date by the Miami-Dade County Product Control Section.

MISSILE IMPACT RATING: None

LABELING: Each unit shall bear a permanent label with the manufacturer's name or logo, city, state, model/series, and following statement: "Miami-Dade County Product Control Approved", unless otherwise noted herein.

RENEWAL of this NOA shall be considered after a renewal application has been filed and there has been no change in the applicable building code negatively affecting the performance of this product.

TERMINATION of this NOA will occur after the expiration date or if there has been a revision or change in the materials, use, and/or manufacture of the product or process. Misuse of this NOA as an endorsement of any product, for sales, advertising or any other purposes shall automatically terminate this NOA. Failure to comply with any section of this NOA shall be cause for termination and removal of NOA.

ADVERTISEMENT: The NOA number preceded by the words Miami-Dade County, Florida, and followed by the expiration date may be displayed in advertising literature. If any portion of the NOA is displayed, then it shall be done in its entirety.

INSPECTION: A copy of this entire NOA shall be provided to the user by the manufacturer or its distributors and shall be available for inspection at the job site at the request of the Building Official.

This NOA consists of this page 1 and evidence pages E-1 and E-2, as well as approval document mentioned above.

The submitted documentation was reviewed by **Manuel Perez, P.E.**

MIAMI-DADE COUNTY APPROVED

9/17/15

PGT Industries, Inc.

NOTICE OF ACCEPTANCE: EVIDENCE SUBMITTED

A. DRAWINGS

1. Manufacturer's die drawings and sections.
2. Drawing No. **MD-DH5460-01** titled "Double Hung Window Installation - NI", sheets 1 through 12 of 12, dated 05/15/15, prepared by manufacturer, signed and sealed by Anthony Lynn Miller, P.E.

B. TESTS

1. Test reports on: 1) Air Infiltration Test, per FBC, TAS 202-94
   2) Uniform Static Air Pressure Test, Loading per FBC TAS 202-94
   3) Water Resistance Test, per FBC, TAS 202-94
   4) Forced Entry Test, per FBC 2411.3.2.1, and TAS 202-94
   5) Large Missile Impact Test per FBC, TAS 201-94
   6) Cyclic Wind Pressure Loading per FBC, TAS 203-94

   along with marked-up drawings and installation diagram of series 5460 and series 5560, PVC double hung windows, prepared by Fenestration Testing Laboratory, Inc., Test Report No. **FTL-8006**, dated 04/27/15, signed and sealed by Idalmis Ortega, P.E.

C. CALCULATIONS

1. Anchor verification calculations and structural analysis, complying with **FBC-5th Edition (2014)**, dated 07/30/15, prepared by manufacturer, signed and sealed by Anthony Lynn Miller, P.E.
2. Glazing complies with **ASTM E1300-09**

D. QUALITY ASSURANCE

1. Miami-Dade Department of Regulatory and Economic Resources (RER).

Manuel Perez

Manuel Perez, P.E.
Product Control Examiner
NOA No. 15-0812.03
Expiration Date: September 17, 2020
Approval Date: September 17, 2015

NOTICE OF ACCEPTANCE: EVIDENCE SUBMITTED

E. MATERIAL CERTIFICATIONS (CONTINUED)

1. Notice of Acceptance No. **12-1120.02** issued to Royal Window and Door Profiles, Plant 13 for their "**White Rigid PVC Exterior Extrusions for Windows and Doors**" dated 02/28/13, expiring on 02/28/18.
2. Notice of Acceptance No. **14-0529.13** issued to Royal Window and Door Profiles, Plant 13 for their "**Bronze and Lighter Shades of Cap Coated Rigid PVC Exterior Extrusions for Windows and Doors**" dated 04/16/15, expiring on 04/16/20.
3. Notice of Acceptance No. **14-0529.14** issued to Royal Window and Door Profiles, Plant 13 for their "**Performance Core Rigid PVC Exterior Extrusions for Windows and Doors**" dated 04/16/15, expiring on 04/16/20.

F. STATEMENTS

1. Statement letter of conformance, complying with **FBC-5th Edition (2014)**, dated July 30, 2015, issued by manufacturer, signed and sealed by Anthony Lynn Miller, P.E.
2. Statement letter of no financial interest, dated July 30, 2015, issued by manufacturer, signed and sealed by Anthony Lynn Miller, P.E.
3. Proposal issued by Product Control, dated 8/6/14 and revised on 8/19/14, signed by Jaime Gascon, P.E. Supervisor, Product Control Section.

G. OTHERS

1. None.

Manuel Perez

Manuel Perez, P.E.
Product Control Examiner
NOA No. 15-0812.03
Expiration Date: September 17, 2020
Approval Date: September 17, 2015

DESIGN PRESSURE RATING	IMPACT RATING
VARIES PER REINFORCEMENT LEVEL, SEE SHEETS 6-7	NOT RATED FOR IMPACT RESISTANCE

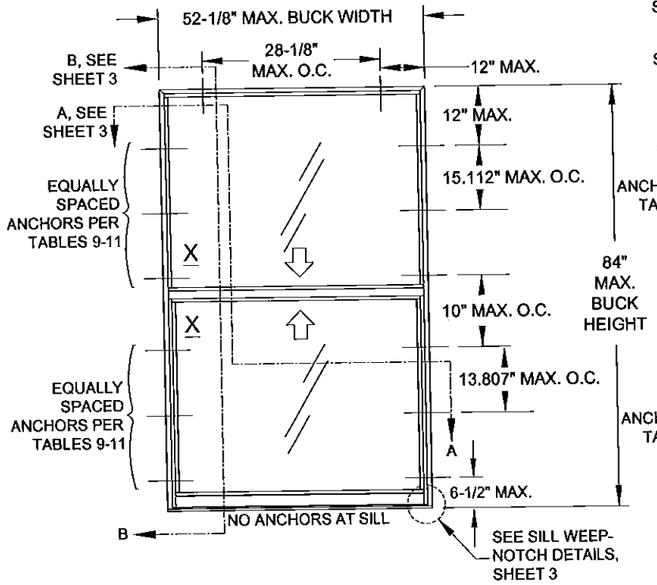

ELEVATION FOR TYP. EQUAL LEG FRAME SHOWN WITH EQUAL-LITE CONFIGURATION

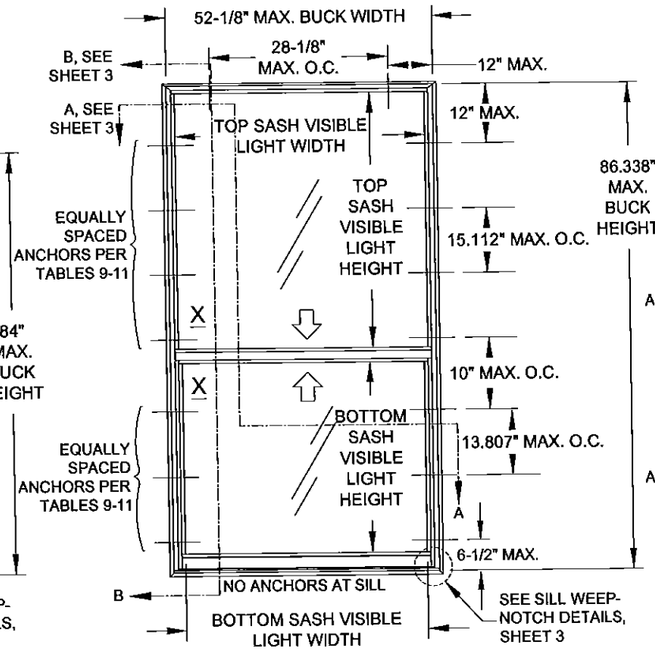

ELEVATION FOR TYP. FLANGE FRAME SHOWN WITH ORIEL/PROVIEW CONFIGURATION

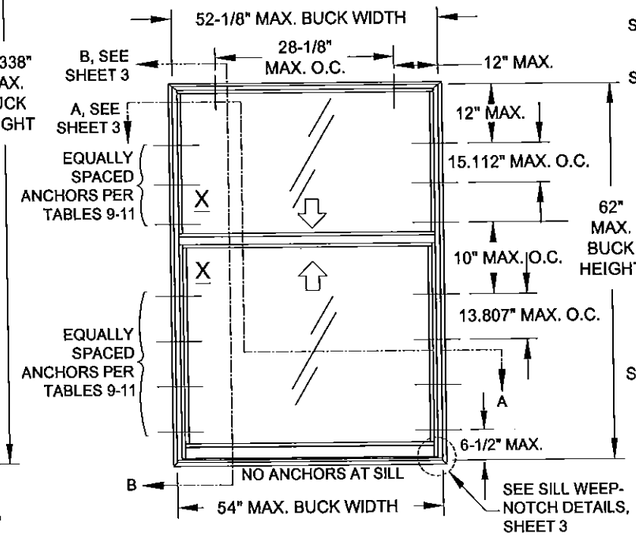

ELEVATION FOR TYP. FLANGE FRAME SHOWN WITH STANDARD COTTAGE CONFIGURATION

FOR CUSTOM COTTAGE CONFIGURATION UP TO 75" HEIGHT SEE TABLES 8-10

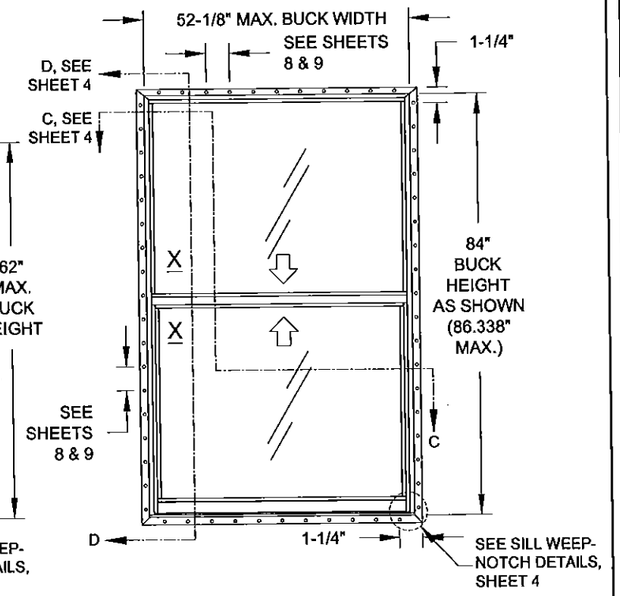

ELEVATION FOR TYP. FIN OR J-CHANNEL FRAME SHOWN WITH EQUAL-LITE CONFIGURATION ANCHORED THROUGH THE NAIL-FIN

(SIMILAR ANCHOR DIMENSIONS FOR OTHER CONFIGURATIONS)

GENERAL NOTES: SERIES 5460 NON-IMPACT RESISTANT DOUBLE HUNG WINDOW

1) THIS PRODUCT HAS BEEN DESIGNED & TESTED TO COMPLY WITH THE REQUIREMENTS OF THE FLORIDA BUILDING CODE, INCLUDING THE HIGH VELOCITY HURRICANE ZONE (HVHZ).
2) SHUTTERS ARE REQUIRED WHEN USED IN WIND-BORNE DEBRIS REGIONS.
3) FOR MASONRY APPLICATIONS IN MIAMI-DADE COUNTY, USE ONLY MIAMI-DADE COUNTY APPROVED MASONRY ANCHORS. MATERIALS USED FOR ANCHOR EVALUATIONS WERE SOUTHERN PINE, ASTM C90 CONCRETE MASONRY UNITS AND CONCRETE WITH MIN. KSI PER ANCHOR TYPE.
4) ALL WOOD BUCKS LESS THAN 1-1/2" THICK ARE TO BE CONSIDERED 1X INSTALLATIONS. 1X WOOD BUCKS ARE OPTIONAL IF UNIT IS INSTALLED DIRECTLY TO SUBSTRATE. WOOD BUCKS DEPICTED AS 2X ARE 1-1/2" THICK OR GREATER. 1X AND 2X BUCKS (WHEN USED) SHALL BE DESIGNED AND SECURED TO PROPERLY TRANSFER LOADS TO THE STRUCTURE. WOOD BUCK DESIGN AND INSTALLATION IS THE RESPONSIBILITY OF THE ENGINEER, (EOR) OR ARCHITECT OF RECORD, (AOR).
5) ANCHOR EMBEDMENT TO BASE MATERIAL SHALL BE BEYOND WALL DRESSING OR STUCCO. USE ANCHORS OF SUFFICIENT LENGTH TO ACHIEVE REQUIRED MIN. EMBEDMENT. INSTALLATION ANCHORS SHOULD BE SEALED. OVERALL SEALING/FLASHING STRATEGY FOR WATER RESISTANCE OF INSTALLATION SHALL BE DONE BY OTHERS AND IS BEYOND THE SCOPE OF THESE INSTRUCTIONS.
6) 1/4" MAX. SHIMS ARE REQUIRED AT EACH ANCHOR LOCATION WHERE THE PRODUCT IS NOT FLUSH TO THE SUBSTRATE. USE SHIMS CAPABLE OF TRANSFERRING APPLIED LOADS.
7) DESIGN PRESSURES:
   A. NEGATIVE DESIGN LOADS BASED ON STRUCTURAL TESTING AND GLASS PER ASTM E1300.
   B. POSITIVE DESIGN LOADS BASED ON WATER TEST PRESSURE, STRUCTURAL TESTING AND GLASS PER ASTM E1300.
8) THE ANCHORAGE METHODS SHOWN HAVE BEEN DESIGNED TO RESIST THE WINDLOADS CORRESPONDING TO THE REQUIRED DESIGN PRESSURE. THE 33-1/3% STRESS INCREASE HAS NOT BEEN USED IN THE DESIGN OF THIS PRODUCT. THE 1.6 LOAD DURATION FACTOR WAS USED FOR THE EVALUATION OF ANCHORS INTO WOOD. ANCHORS THAT COME INTO CONTACT WITH OTHER DISSIMILAR MATERIALS SHALL MEET THE REQUIREMENTS OF THE FLORIDA BUILDING CODE FOR CORROSION RESISTANCE.
9) METAL SUBSTRATE TO MEET MIN. STRENGTH AND THICKNESS REQUIREMENTS PER CURRENT FLORIDA BUILDING CODE AND TO BE REVIEWED BY THE AUTHORITY HAVING JURISDICTION.
10) REFERENCES: TEST REPORTS FTL-8006; ELCO ULTRACON NOA; ELCO CRETEFLEX NOA; ELCO AGGRE-GATOR NOA; ROYAL WINDOW AND DOOR PROFILES, LTD WHITE & BRONZE/LIGHTER SHADES OF CAP COATED PVC EXTRUSION NOA'S; NATIONAL DESIGN SPECIFICATION FOR WOOD CONSTRUCTION, ANSI/AF&PA NDS & ALUMINUM DESIGN MANUAL
11) APPLICABLE EGRESS REQUIREMENTS TO BE REVIEWED BY BUILDING OFFICIAL.

USER INSTRUCTIONS:

1) DETERMINE THE SITE SPECIFIC, WINDOW OPENING'S DESIGN PRESSURE REQUIREMENT FROM ASCE 7.
2) DETERMINE THE MOST SUITABLE ANCHOR GROUP FROM TABLES 2 OR 3 ACCORDING TO THE INSTALLATION CONDITIONS.
3) KNOWING YOUR GLAZING OPTION (TABLE 1), WINDOW CONFIGURATION AND SIZE, DETERMINE YOUR WINDOW'S DESIGN PRESSURE FROM TABLES 4 OR 5. IT MUST EQUAL OR EXCEED THE DESIGN PRESSURE REQUIREMENT FOR THE WINDOW OPENING OBTAINED IN STEP 1.
4) DETERMINE THE ANCHOR QUANTITY FROM TABLES 6 OR 7. VERIFY THE ANCHOR/SUBSTRATE WILL MEET REQUIREMENTS FOR YOUR OPENING'S CONDITION FROM TABLES 2 OR 3, AND THAT ALL MIN. REQUIREMENTS FROM THIS SHEET-SET ARE MET.
5) INSTALL AS PER SHEET 3 FOR THRU-FRAME INSTALLATION OR SHEET 4 FOR INTEGRAL FIN INSTALLATION.

NOTE:DESIGN PRESSURE RATING DETERMINATION IS THE SAME PROCESS FOR ALL FRAME TYPES (J-CHANNEL, FLANGE, INTEGRAL FIN OR EQUAL LEG/BOX).

GENERAL NOTES.....1
ELEVATIONS.....1
FRAME, GLASS & ANCHOR OPTIONS.....2
INSTALLATION, FLANGE & EQUAL LEG/BOX.....3
INSTALLATION, INTEGRAL FIN & J-CHANNEL.....4
GLAZING DETAILS.....5
DESIGN PRESSURES.....6-7
ANCHOR QUANTITIES.....8-9
EXTRUSION PROFILES.....10
ASSEMBLY & PARTS LIST.....11-12

Approved as complying with the Florida Buiding Code
Date Sept. 17, 2015
NOA# 15-0512.03
Miami Dade Product Control
By Manuel Perez

ANTHONY LYNN MILLER
LICENSE
No. 58705
7/30/15
STATE OF FLORIDA
PROFESSIONAL ENGINEER
A. LYNN MILLER, P.E.
P.E.# 58705

PGT®
1070 TECHNOLOGY DRIVE
N. VENICE, FL 34275
(941)-480-1600
CERT. OF AUTH. #29296

Revised By:	Date:	Revision:
Revised By:	Date:	Revision:

Description:	Drawn By:
GENERAL NOTES & ELEVATION	J ROSOWSKI

Title:	Date:
DOUBLE HUNG WINDOW INSTALLATION - NI	05/15/15

Series/Model:	Scale:	Sheet:	Drawing No.	Rev:
DH-5460	NTS	1 OF 12	MD-DH5460-01	

TABLE 1: ALLOWABLE GLASS TYPES

Glass Type	Description (Listed from Exterior to Interior)	Design Pressure	
		Table #	Sheet #
1	3/4" I.G.: 1/8" A Exterior Cap + 1/2" Air Space + 1/8" A Exterior Cap	4, 5	6, 7
2	3/4" I.G.: 1/8" T Exterior Cap + 1/2" Air Space + 1/8" T Exterior Cap	4, 5	6, 7
3	3/4" I.G.: 3/16" A Exterior Cap + 3/8" Air Space + 3/16" A Exterior Cap	4, 5	6, 7
4	3/4" I.G.: 3/16" T Exterior Cap + 3/8" Air Space + 3/16" T Exterior Cap	4, 5	6, 7

GLAZING NOTES:
"A" = ANNEALED
"T" = TEMPERED

TABLE 2: ALLOWABLE ANCHORS THROUGH THE FRAME

Group	Anchor	Substrate	Min. Edge Distance	Min. Embedment*
A	#10 SMS (steel, 18-8 S.S. or 410 S.S.)	P.T. Southern Pine (SG=0.55)	7/16"	1-3/8"
		Steel, A36*	3/8"	0.050"
		Steel Stud, A653 Gr. 33*	3/8"	0.0451" (18 Ga.)
		Aluminum, 6063-T5*	3/8"	0.050"
	3/16" steel Ultracon	P.T. Southern Pine (SG=0.55)	7/16"	1-3/8"
		Concrete (min. 2.85 ksi)	1"	1-3/8"
		Ungrouted CMU, (ASTM C-90)	2-1/2"	1-1/4"
B	#12 SMS (steel, 18-8 S.S. or 410 S.S.)	P.T. Southern Pine (SG=0.55)	9/16"	1-3/8"
		Steel, A36*	3/8"	0.050"
		Steel Stud, A653 Gr. 33*	3/8"	0.0451" (18 Ga.)
		Aluminum, 6063-T5*	3/8"	0.063"
C	1/4" steel Ultracon	Concrete (min. 2.85 ksi)	1"	1-3/4"
		Ungrouted CMU, (ASTM C-90)	2-1/2"	1-1/4"
	1/4" steel Creteflex	Concrete (min. 3.35 ksi)	1"	1-3/4"
D	1/4" steel Ultracon	Concrete (min. 2.85 ksi)	2-1/2"	1-3/4"
	1/4" steel Ultracon	P.T. Southern Pine (SG=0.55)	1"	1-3/8"
	1/4" steel Creteflex	Concrete (min. 3.35 ksi)	2-1/2"	1-3/4"
	1/4" steel Creteflex	Ungrouted CMU, (ASTM C-90)	2-1/2"	1-1/4"
		P.T. Southern Pine (SG=0.55)	1"	1-3/8"
	1/4" steel Aggre-Gator	Concrete (min. 3.275 ksi)	1-1/2"	1-3/8"
	1/4" steel Aggre-Gator	P.T. Southern Pine (SG=0.55)	1"	1-3/8"
		Grouted CMU, (ASTM C-90)	2"	2"

* MIN. OF 3 THREADS BEYOND THE METAL SUBSTRATE. FOR STEEL STUDS, MIN. Fu=45 KSI & MIN. Fy=33 KSI.

"UNGROUTED CMU" VALUES MAY BE USED FOR GROUTED CMU APPLICATIONS.

TABLE 3: ALLOWABLE ANCHORS THROUGH THE INTEGRAL FIN

Group	Anchor	Substrate	Min. Edge Distance	Min. Embedment*
E	2-1/2" x .131" Common Nail	P.T. Southern Pine (SG=.55)	3/8"	2-7/16"
F	2-1/2" Ring-shank Roofing Nail	P.T. Southern Pine (SG=.55)	3/8"	2-7/16"
	#10 Trusshead SMS (steel, 18-8 S.S. or 410 S.S.)	P.T. Southern Pine (SG=.55)	1/2"	1-3/8"
		Aluminum, 6063-T5*	3/8"	0.050"
		Steel Stud, Gr. 33*	3/8"	0.0451" (18 Ga.)
		Steel, A36*	3/8"	0.050"
	#12 SMS (steel, 18-8 S.S. or 410 S.S.)	P.T. Southern Pine (SG=.55)	9/16"	1-3/8"
		Aluminum, 6063-T5*	3/8"	0.063"
		Steel Stud, Gr. 33*	3/8"	0.050"
		Steel, A36*	3/8"	0.050"

* MIN. OF 3 THREADS BEYOND THE METAL SUBSTRATE. FOR STEEL STUDS, MIN. Fu=45 KSI & MIN. Fy=33 KSI.

FIGURE A: FRAME CONFIGURATIONS

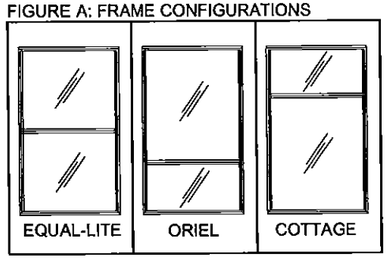

Frame Types (see Fig B)	Glass Options (see Table 1)	Frame Configs. (see Fig A)	Installation Options that may be used	
Flange (#2)	1 - 4	Equal-Lite, Oriel/Proview & Cottage	Through the frame of the window.....	....into 2X Wood Frame/Buckstrip - sheet 3, option 1
				....into Concrete/CMU - sheet 3, option 2
				....through 1X Buckstrip into Concrete/CMU - sheet 3, option 3
				....into Metal - sheet 3, option 4
Box / Equal-Leg (#4)	1 - 4	Equal-Lite, Oriel/Proview & Cottage	Through the frame of the window.....	....into 2X Wood Frame/Buckstrip - sheet 3, option 1
				....into Concrete/CMU - sheet 3, option 2
				....through 1X Buckstrip into Concrete/CMU - sheet 3, option 3
				....into Metal - sheet 3, option 4
J-Channel (#1)	1 - 4	Equal-Lite, Oriel/Proview & Cottage	Through the Integral fin.....	....into 2X Wood Frame/Buckstrip - sheet 4, option 5
				....into Metal - sheet 4, option 7
			Through the frame of the window.....	....into 2X Wood Frame/Buckstrip - sheet 4, option 6
				....into Metal - sheet 4, option 8
Integral Fin (#3)	1 - 4	Equal-Lite, Oriel/Proview & Cottage	Through the Integral fin.....	....into 2X Wood Frame/Buckstrip - sheet 4, option 5
				....into Metal - sheet 4, option 7
			Through the frame of the window.....	....into 2X Wood Frame/Buckstrip - sheet 4, option 6
				....into Metal - sheet 4, option 8

FIGURE B: FRAME TYPES

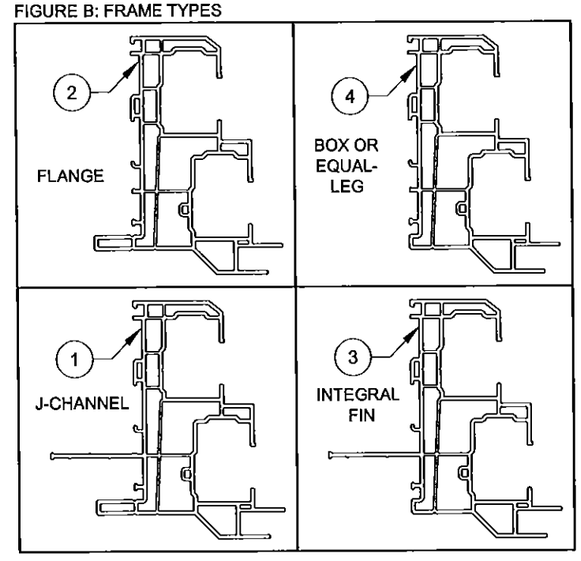

Approved as complying with the Florida Building Code
Date Sept 17 2015
NOA# 15-0812.03
Miami-Dade Product Control
By Manuel Perez

ANTHONY LYNN MILLER
LICENSE
No. 58705
STATE OF FLORIDA
PROFESSIONAL ENGINEER
7/30/15
A. LYNN MILLER, P.E.
P.E.# 58705

PGT®
1070 TECHNOLOGY DRIVE
N. VENICE, FL 34275
(941)-480-1600
CERT. OF AUTH. #29296

Revised By:	Date:	Revision:
Revised By:	Date:	Revision:

Description:	Drawn By:
GLASS/ANCHORS/FRAME OPTIONS	J ROSOWSKI

Title:	Date:
DOUBLE HUNG WINDOW INSTALLATION - NI	05/15/15

Series/Model:	Scale:	Sheet:	Drawing No.	Rev:
DH-5460	NTS	2 OF 12	MD-DH5460-01	

INSTALLATION DETAILS FOR FLANGE & EQUAL-LEG/BOX FRAMES

INSTALLATION OPTION 1

ANCHORED THROUGH FRAME INTO 2X WOOD FRAME OR BUCKSTRIP. SEE NOTE 2, THIS SHEET.

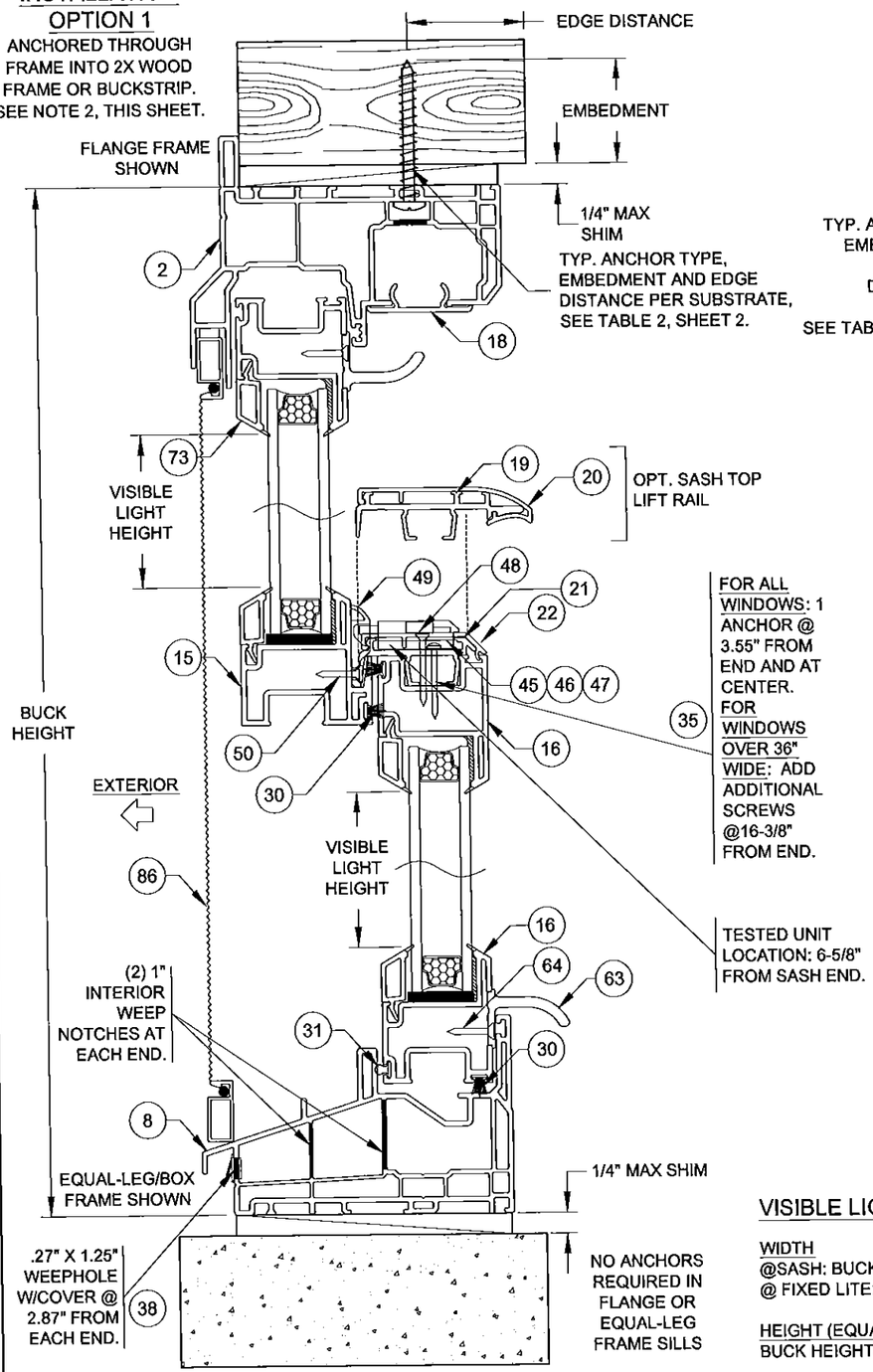

FOR ALL WINDOWS: 1 ANCHOR @ 3.55" FROM END AND AT CENTER. FOR WINDOWS OVER 36" WIDE: ADD ADDITIONAL SCREWS @16-3/8" FROM END.

TESTED UNIT LOCATION: 6-5/8" FROM SASH END.

VERTICAL SECTION B-B

INSTALLATION OPTION 2

ANCHORED THROUGH FRAME DIRECTLY INTO CONCRETE/CMU.

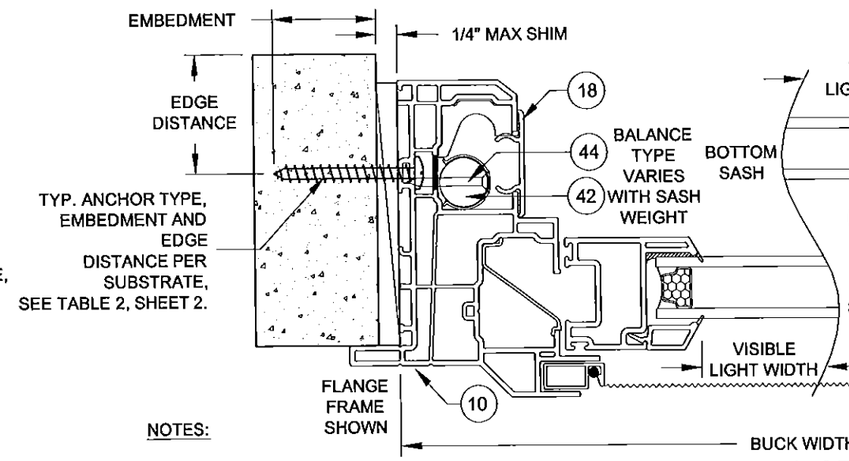

INSTALLATION OPTION 3

ANCHORED THROUGH FRAME AND 1X BUCKSTRIP INTO CONCRETE/CMU. SEE NOTE 2, THIS SHEET.

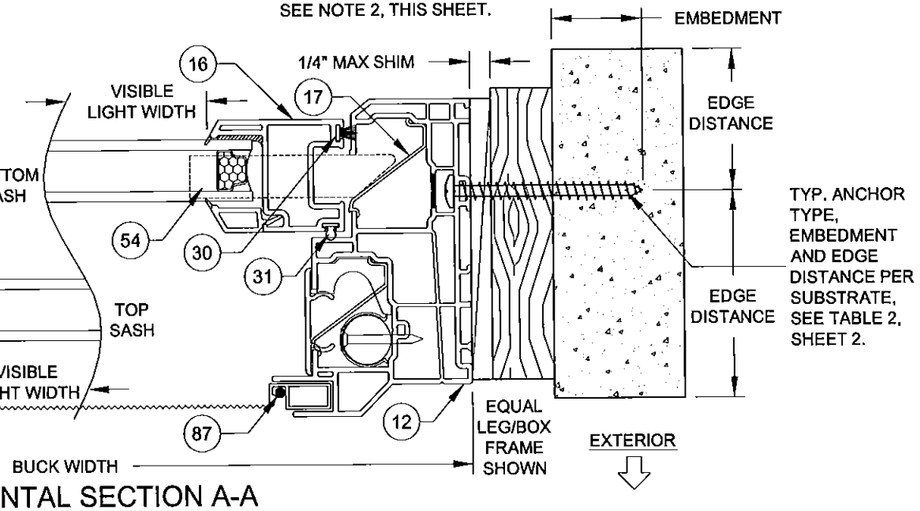

HORIZONTAL SECTION A-A

NOTES:

1) USE ONLY SUBSTRATE-APPROPRIATE ANCHORS LISTED ON TABLE 2, SHEET 2. FOLLOW EMBEDMENT AND EDGE DISTANCE LIMITS. ANY INSTALLATION OPTION SHOWN MAY BE USED ON ANY SIDE OF THE WINDOW.

2) MASONRY ANCHORS MAY BE USED INTO WOOD AS PER TABLE 2, SHEET 2. ALL WOOD BUCKS LESS THAN 1-1/2" THICK ARE TO BE CONSIDERED 1X INSTALLATIONS. 1X WOOD BUCKS ARE OPTIONAL IF UNIT IS INSTALLED DIRECTLY TO SUBSTRATE. WOOD BUCKS DEPICTED AS 2X ARE 1-1/2" THICK OR GREATER. 1X AND 2X BUCKS (WHEN USED) SHALL BE DESIGNED TO PROPERLY TRANSFER LOADS TO THE STRUCTURE. WOOD BUCK DESIGN AND INSTALLATION IS THE RESPONSIBILITY OF THE ENGINEER OR ARCHITECT OF RECORD.

3) VISIBLE LIGHT WIDTH OR HEIGHT (ALSO REFERRED TO AS DAYLIGHT OPENING) IS MEASURED FROM BEADING TO BEADING.

DADE APPROVED MULLION, FBC COMPLIANT ALUMINUM/STEEL FRAMING OR STEEL STUD. MAY BE VERTICAL OR HORIZONTAL. SEE SUBSTRATE PROPERTIES, TABLE 2, SHEET 2.

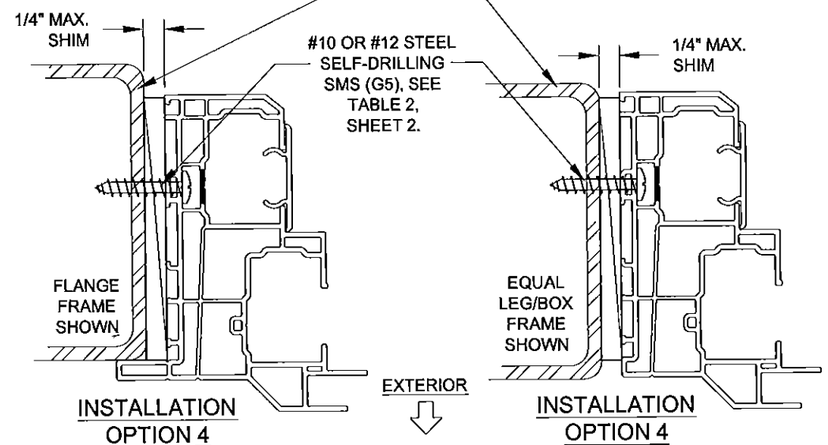

INSTALLATION OPTION 4

ANCHORED THROUGH FRAME INTO METAL

INSTALLATION OPTION 4

ANCHORED THROUGH FRAME INTO METAL

VISIBLE LIGHT FORMULAS

WIDTH
@SASH: BUCK WIDTH - 6-1/2"
@ FIXED LITE: BUCK WIDTH - 7-1/2"

HEIGHT (EQUAL-LITE)
BUCK HEIGHT/2 - 4-3/8"

ANTHONY LYNN MILLER LICENSE No. 58705 STATE OF FLORIDA PROFESSIONAL ENGINEER
7/30/15
A. LYNN MILLER, P.E.
P.E.# 58705

PGT®
1070 TECHNOLOGY DRIVE
N. VENICE, FL 34275
(941)-480-1600
CERT. OF AUTH. #29296

Approved as complying with the Florida Building Code
Date Sept. 17, 2015
NOA# 15-0812.03
Miami Dade Product Control
By Manuel Perez

Revised By:	Date:	Revision:
Revised By:	Date:	Revision:

Description:	Drawn By:
FLANGE & EQUAL-LEG/BOX FRAMES	J ROSOWSKI

Title:	Date:
DOUBLE HUNG WINDOW INSTALLATION - NI	05/15/15

Series/Model:	Scale:	Sheet:	Drawing No.	Rev:
DH-5460	NTS	3 OF 12	MD-DH5460-01	

INSTALLATION DETAILS FOR INTEGRAL FIN & J-CHANNEL FRAMES

INSTALLATION OPTION 5

ANCHORED THROUGH INTEGRAL FIN INTO 2X WOOD FRAME OR BUCK- STRIP. SEE NOTE 2, THIS SHEET.

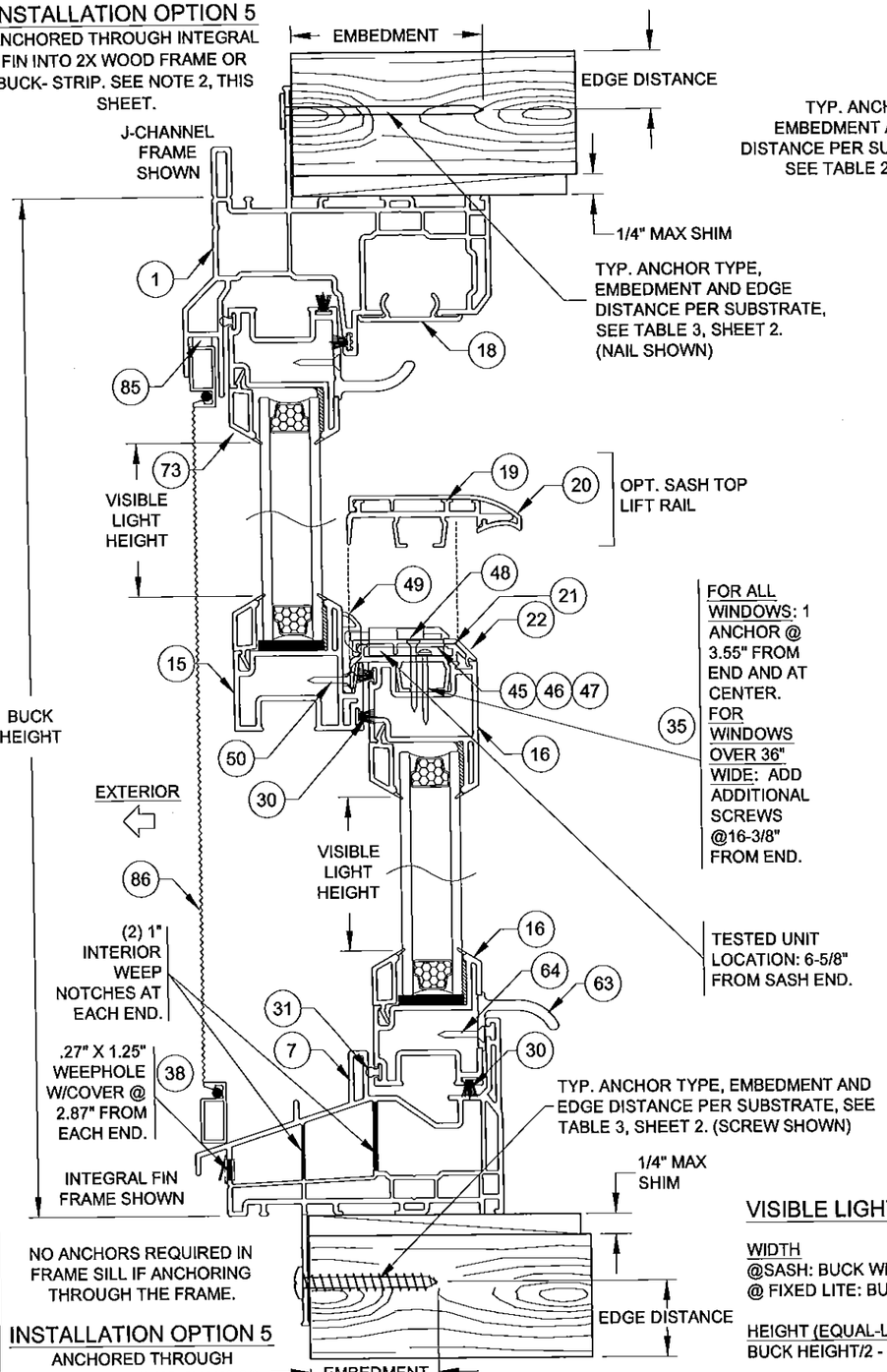

FOR ALL WINDOWS: 1 ANCHOR @ 3.55" FROM END AND AT CENTER. FOR WINDOWS OVER 36" WIDE: ADD ADDITIONAL SCREWS @16-3/8" FROM END.

TESTED UNIT LOCATION: 6-5/8" FROM SASH END.

NO ANCHORS REQUIRED IN FRAME SILL IF ANCHORING THROUGH THE FRAME.

INSTALLATION OPTION 5

ANCHORED THROUGH INTEGRAL FIN INTO 2X WOOD FRAME OR BUCK- STRIP. SEE NOTE 2, THIS SHEET.

VERTICAL SECTION D-D

INSTALLATION OPTION 6

ANCHORED THROUGH FRAME INTO 2X WOOD FRAME OR BUCKSTRIP. SEE NOTE 2, THIS SHEET.

INSTALLATION OPTION 5

ANCHORED THROUGH INTEGRAL FIN INTO 2X WOOD FRAME OR BUCKSTRIP. SEE NOTE 2, THIS SHEET.

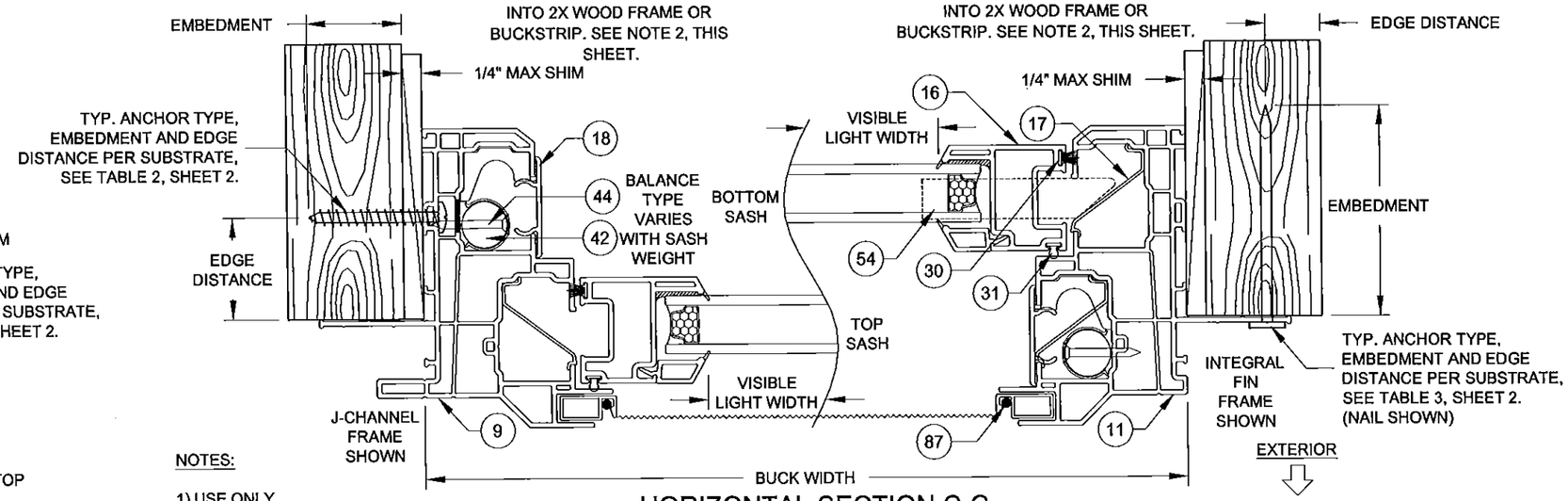

HORIZONTAL SECTION C-C

NOTES:

1) USE ONLY SUBSTRATE-APPROPRIATE ANCHORS LISTED ON TABLES 2 & 3 OF SHEET 2. FOLLOW EMBEDMENT AND EDGE DISTANCE LIMITS. ANY INSTALLATION OPTION SHOWN MAY BE USED ON ANY SIDE OF THE WINDOW.

2) MASONRY ANCHORS MAY BE USED INTO WOOD AS PER TABLE 2, SHEET 2. ALL WOOD BUCKS LESS THAN 1-1/2" THICK ARE TO BE CONSIDERED 1X INSTALLATIONS. 1X WOOD BUCKS ARE OPTIONAL IF UNIT IS INSTALLED DIRECTLY TO SUBSTRATE. WOOD BUCKS DEPICTED AS 2X ARE 1-1/2" THICK OR GREATER. 1X AND 2X BUCKS (WHEN USED) SHALL BE DESIGNED TO PROPERLY TRANSFER LOADS TO THE STRUCTURE. WOOD BUCK DESIGN AND INSTALLATION IS THE RESPONSIBILITY OF THE ENGINEER OR ARCHITECT OF RECORD.

3) VISIBLE LIGHT WIDTH OR HEIGHT (ALSO REFERRED TO AS DAYLIGHT OPENING) IS MEASURED FROM BEADING TO BEADING.

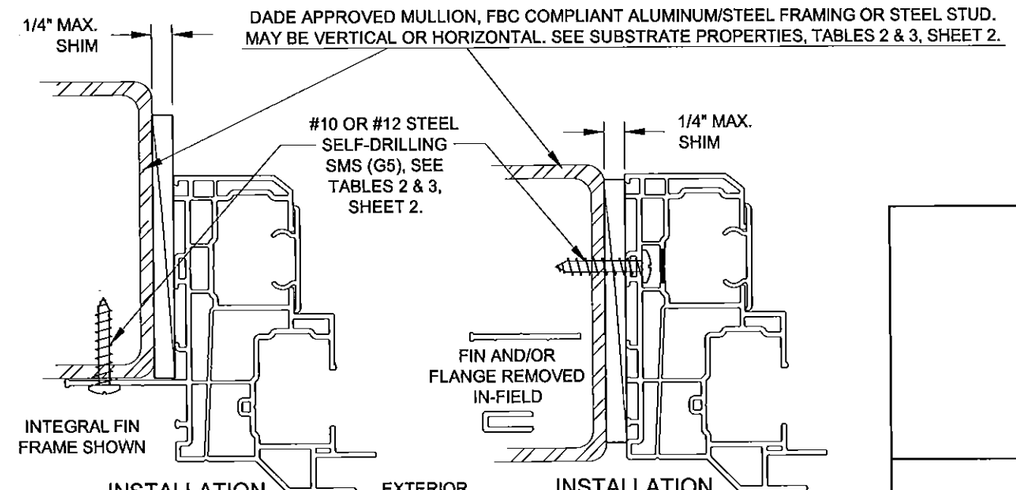

INSTALLATION OPTION 7

ANCHORED THROUGH INTEGRAL FIN INTO METAL

INSTALLATION OPTION 8

ANCHORED THROUGH FRAME INTO METAL (INTEGRAL FIN/FLANGE REMOVED)

VISIBLE LIGHT FORMULAS

WIDTH
@SASH: BUCK WIDTH - 6-1/2"
@ FIXED LITE: BUCK WIDTH - 7-1/2"

HEIGHT (EQUAL-LITE)
BUCK HEIGHT/2 - 4-3/8"

ANTHONY LYNN MILLER LICENSE No. 58705 STATE OF FLORIDA PROFESSIONAL ENGINEER
7/30/15
A. LYNN MILLER, P.E.
P.E.# 58705

PGT®
1070 TECHNOLOGY DRIVE
N. VENICE, FL 34275
(941)-480-1600
CERT. OF AUTH. #29296

Approved as complying with the Florida Building Code
Date Sept. 17, 2015
NOA# 15-0812.03
Miami Dade Product Control
By Manuel Perez

Revised By:	Date:	Revision:
Revised By:	Date:	Revision:

Description: J-CHANNEL & INTEGRAL FIN FRAMES
Drawn By: J ROSOWSKI
Title: DOUBLE HUNG WINDOW INSTALLATION - NI
Date: 05/15/15

Series/Model:	Scale:	Sheet:	Drawing No.	Rev:
DH-5460	NTS	4 OF 12	MD-DH5460-01	

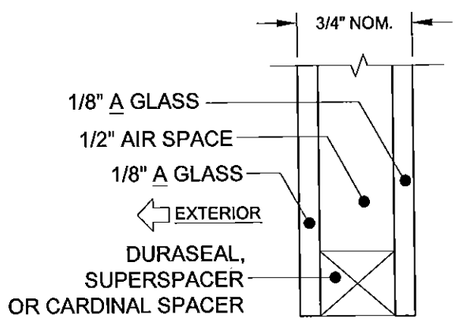

GLASS TYPE 1

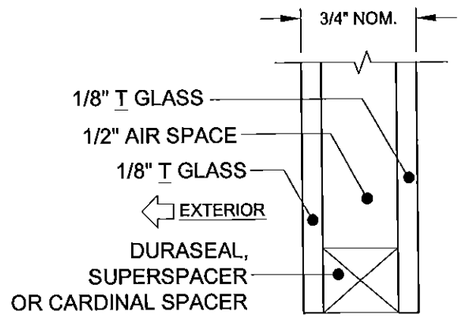

GLASS TYPE 2

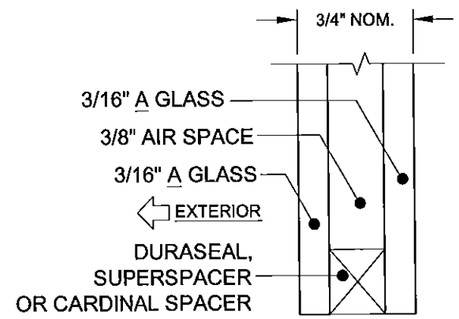

GLASS TYPE 3

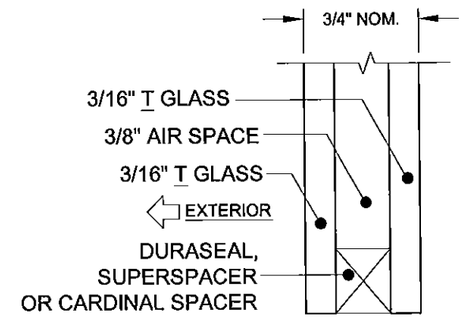

GLASS TYPE 4

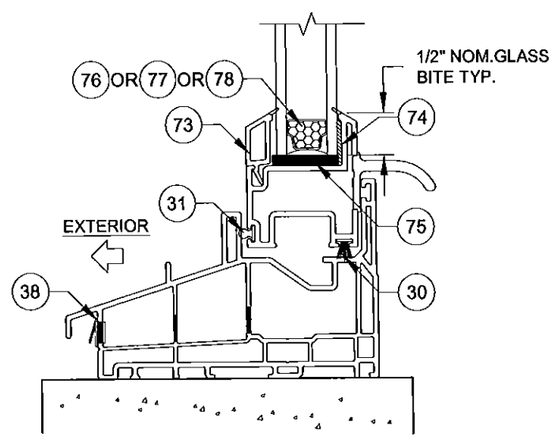

TYP. GLAZING DETAIL

GLAZING NOTES:
"A" = ANNEALED
"T" = TEMPERED

ANTHONY LYNN MILLER
LICENSE
No. 58705
STATE OF FLORIDA
PROFESSIONAL ENGINEER
A. LYNN MILLER, P.E.
P.E.# 58705

PGT®
1070 TECHNOLOGY DRIVE
N. VENICE, FL 34275
(941)-480-1600
CERT. OF AUTH. #29296

Revised By:	Date:	Revision:
Revised By:	Date:	Revision:

Approved as complying with the Florida Building Code
Date Sept. 17, 2015
NOA# 15-0812.03
Miami Dade Product Control
By. Manuel Perez

Description:	Drawn By:
GLAZING DETAILS	J ROSOWSKI

Title:	Date:
DOUBLE HUNG WINDOW INSTALLATION - NI	05/15/15

Series/Model:	Scale:	Sheet:	Drawing No.	Rev:
DH-5460	NTS	5 OF 12	MD-DH5460-01	

TABLE 4:

Glass Types: 1, 2, 3 & 4 / Reinforcement Level: R1	Bottom Sash Description for given Range	Sash Height Range (in)	Final Design Pressure (lbs/ft²) — Window Buck Width (in) 18		24		32		36		40		48		52.125	
Window Buck Height (in)																
24	Equal-lite	11.266	+50.0	-100.0	+50.0	-100.0	+50.0	-100.0	+50.0	-100.0	+50.0	-100.0	+50.0	-92.0	+50.0	-88.0
28	Standard Cottage	13.517 - 15.516	+50.0	-100.0	+50.0	-100.0	+50.0	-100.0	+50.0	-100.0	+50.0	-100.0	+50.0	-89.0	+50.0	-82.0
	Equal-lite	11.517 - 13.516	+50.0	-100.0	+50.0	-100.0	+50.0	-100.0	+50.0	-100.0	+50.0	-100.0	+50.0	-100.0	+50.0	-98.5
	Standard Proview	11.266 - 11.516	+50.0	-100.0	+50.0	-100.0	+50.0	-100.0	+50.0	-100.0	+50.0	-100.0	+50.0	-100.0	+50.0	-94.0
37.375	Tallest	21.517 - 24.891	+50.0	-100.0	+50.0	-100.0	+50.0	-100.0	+50.0	-100.0	+50.0	-93.0	+50.0	-79.0	+50.0	-74.0
	Standard Cottage	18.017 - 21.516	+50.0	-100.0	+50.0	-100.0	+50.0	-100.0	+50.0	-100.0	+50.0	-100.0	+50.0	-85.6	+50.0	-77.1
	Equal-lite	15.017 - 18.016	+50.0	-100.0	+50.0	-100.0	+50.0	-100.0	+50.0	-100.0	+50.0	-100.0	+50.0	-86.2	+50.0	-77.7
	Standard Proview	11.517 - 15.016	+50.0	-100.0	+50.0	-100.0	+50.0	-100.0	+50.0	-100.0	+50.0	-100.0	+50.0	-86.5	+50.0	-77.9
	Shortest	11.266 - 11.516	+50.0	-100.0	+50.0	-100.0	+50.0	-100.0	+50.0	-100.0	+50.0	-100.0	+50.0	-90.4	+50.0	-80.5
44	Tallest	29.517 - 31.516	+50.0	-100.0	+50.0	-99.5	+50.0	-92.8	+50.0	-92.8	+50.0	-92.8	+50.0	-82.9	+50.0	-74.0
	Custom Size	26.517 - 29.516	+50.0	-100.0	+50.0	-100.0	+50.0	-100.0	+50.0	-100.0	+50.0	-100.0	+50.0	-79.6	+50.0	-71.2
	Standard Cottage	23.517 - 26.516	+50.0	-100.0	+50.0	-100.0	+50.0	-100.0	+50.0	-100.0	+50.0	-100.0	+50.0	-78.1	+50.0	-70.0
	Equal-lite	20.517 - 23.516	+50.0	-100.0	+50.0	-100.0	+50.0	-100.0	+50.0	-100.0	+50.0	-99.3	+50.0	-77.4	+50.0	-69.5
	Custom Size	18.016 - 20.516	+50.0	-100.0	+50.0	-100.0	+50.0	-100.0	+50.0	-100.0	+50.0	-100.0	+50.0	-78.1	+50.0	-70.1
	Standard Proview	11.517 - 18.015	+50.0	-100.0	+50.0	-100.0	+50.0	-97.8	+50.0	-97.8	+50.0	-97.8	+50.0	-75.5	+50.0	-67.4
	Shortest	11.266 - 11.516	+50.0	-100.0	+50.0	-100.0	+50.0	-96.3	+50.0	-96.3	+50.0	-96.3	+50.0	-85.6	+50.0	-76.5
48	Tallest	27.517 - 35.141	+50.0	-100.0	+50.0	-84.5	+50.0	-76.1	+50.0	-75.1	+50.0	-75.1	+50.0	-72.1	+50.0	-64.0
	Standard Cottage	23.517 - 27.516	+50.0	-100.0	+50.0	-100.0	+50.0	-100.0	+50.0	-100.0	+50.0	-94.3	+50.0	-72.6	+50.0	-65.0
	Equal-lite	20.517 - 23.516	+50.0	-100.0	+50.0	-100.0	+50.0	-100.0	+50.0	-100.0	+50.0	-94.9	+50.0	-73.4	+50.0	-65.7
	Standard Proview	18.016 - 20.516	+50.0	-100.0	+50.0	-100.0	+50.0	-100.0	+50.0	-100.0	+50.0	-96.4	+50.0	-74.4	+50.0	-66.6
	Custom Size	14.517 - 18.015	+50.0	-100.0	+50.0	-98.7	+50.0	-91.9	+50.0	-91.9	+50.0	-91.9	+50.0	-74.8	+50.0	-66.7
	Custom Size	11.517 - 14.516	+50.0	-100.0	+50.0	-86.2	+50.0	-77.8	+50.0	-77.1	+50.0	-77.1	+50.0	-77.1	+50.0	-69.1
	Shortest	11.266 - 11.516	+50.0	-100.0	+50.0	-85.3	+50.0	-76.9	+50.0	-76.0	+50.0	-76.0	+50.0	-76.0	+50.0	-72.4
49.625	Tallest	30.517 - 36.766	+50.0	-94.5	+50.0	-79.2	+50.0	-70.4	+50.0	-68.9	+50.0	-68.8	+50.0	-68.8	+50.0	-64.7
	Standard Cottage	27.517 - 30.516	+50.0	-100.0	+50.0	-100.0	+50.0	-98.8	+50.0	-98.8	+50.0	-95.0	+50.0	-72.9	+50.0	-65.1
	Custom Size	24.517 - 27.516	+50.0	-100.0	+50.0	-100.0	+50.0	-100.0	+50.0	-100.0	+50.0	-93.6	+50.0	-72.0	+50.0	-64.4
	Equal-lite	21.517 - 24.516	+50.0	-100.0	+50.0	-100.0	+50.0	-100.0	+50.0	-100.0	+50.0	-93.3	+50.0	-71.9	+50.0	-64.3
	Standard Proview	18.016 - 21.516	+50.0	-100.0	+50.0	-100.0	+50.0	-100.0	+50.0	-100.0	+50.0	-94.0	+50.0	-72.1	+50.0	-64.4
	Custom Size	14.517 - 18.015	+50.0	-100.0	+50.0	-91.5	+50.0	-83.7	+50.0	-83.4	+50.0	-83.4	+50.0	-73.8	+50.0	-65.7
	Custom Size	11.517 - 14.516	+50.0	-96.1	+50.0	-80.6	+50.0	-71.9	+50.0	-70.5	+50.0	-70.5	+50.0	-70.5	+50.0	-68.2
	Shortest	11.266 - 11.516	+50.0	-95.2	+50.0	-79.8	+50.0	-71.0	+50.0	-69.6	+50.0	-69.5	+50.0	-69.5	+50.0	-69.5
62	Tallest	36.517 - 36.767	+50.0	-94.5	+50.0	-79.2	+50.0	-70.3	+50.0	-68.9	+50.0	-68.8	+50.0	-66.7	+50.0	-59.0
	Standard Cottage	34.517 - 36.516	+50.0	-95.4	+50.0	-80.0	+50.0	-71.2	+50.0	-69.8	+50.0	-69.7	+50.0	-65.3	+50.0	-57.7
	Custom Size	31.517 - 34.516	+50.0	-100.0	+50.0	-86.8	+50.0	-78.5	+50.0	-77.8	+50.0	-77.8	+50.0	-64.1	+50.0	-56.7
	Equal-lite	28.517 - 31.516	+50.0	-100.0	+50.0	-98.7	+50.0	-91.9	+50.0	-91.9	+50.0	-85.4	+50.0	-63.9	+50.0	-56.5
	Custom Size	25.517 - 28.516	+50.0	-100.0	+50.0	-86.2	+50.0	-77.8	+50.0	-77.1	+50.0	-77.1	+50.0	-64.2	+50.0	-56.7
	Standard Proview	22.517 - 25.516	+50.0	-91.6	+50.0	-76.5	+50.0	-67.5	+50.0	-65.8	+50.0	-65.5	+50.0	-65.0	+50.0	-57.4
	Custom Size	20.017 - 22.516	+50.0	-84.5	+50.0	-69.9	+50.0	-60.8	+50.0	-58.7	+50.0	-57.8	+50.0	-57.8	+50.0	-57.8
	Custom Size	18.016 - 20.016	+50.0	-79.5	+50.0	-65.4	+50.0	-56.3	+50.0	-54.0	+50.0	-52.8	+50.0	-52.6	+50.0	-52.6
	Shortest	16.928 - 18.015	+50.0	-77.0	+50.0	-63.2	+50.0	-54.1	+50.0	-51.8	+50.0	-50.4	+50.0	-50.0	+50.0	-50.0
75	Tallest	38.517 - 41.266	+50.0	-81.7	+50.0	-67.4	+50.0	-58.3	+50.0	-56.1	+50.0	-55.0	+50.0	-54.9	+50.0	-52.1
	Equal-lite	36.517 - 38.516	+50.0	-89.1	+50.0	-74.1	+50.0	-65.1	+50.0	-63.3	+50.0	-62.8	+50.0	-59.6	+50.0	-52.1
	Custom Size	34.517 - 36.516	+50.0	-88.6	+50.0	-73.7	+50.0	-64.6	+50.0	-62.8	+50.0	-62.3	+50.0	-59.6	+50.0	-52.1
	Custom Size	31.517 - 34.516	+50.0	-80.7	+50.0	-66.5	+50.0	-57.3	+50.0	-55.1	+50.0	-54.0	+50.0	-53.8	+50.0	-52.1
	Standard Proview	29.928 - 31.516	+50.0	-77.0	+50.0	-63.2	+50.0	-54.1	+50.0	-51.8	+50.0	-50.4	+50.0	-50.0	+50.0	-50.0
84	Equal-lite	40.017 - 41.266	+50.0	-79.5	+50.0	-65.4	+50.0	-56.3	+50.0	-54.0	+50.0	-52.8	+50.0	-52.6	+50.0	-50.2
	Custom Size	38.928 - 40.016	+50.0	-77.0	+50.0	-63.2	+50.0	-54.1	+50.0	-51.8	+50.0	-50.4	+50.0	-50.0	+50.0	-50.0
86.338	Custom Size	41.266	+50.0	-77.0	+50.0	-63.2	+50.0	-54.1	+50.0	-51.8	+50.0	-50.4	+50.0	-50.0	+50.0	-50.0

SEE TABLE 6, SHEET 8 FOR ANCHOR GROUP AND QUANTITY.

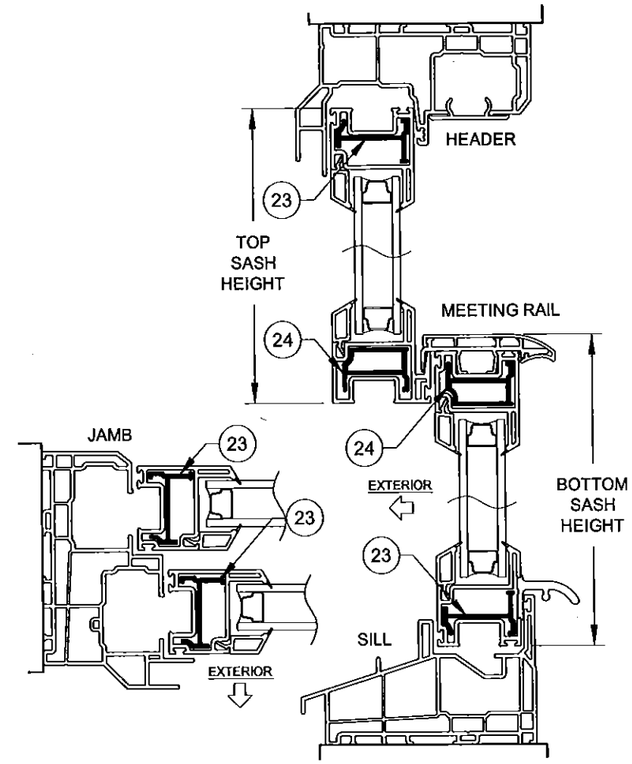

SECTION DETAIL FOR WINDOWS WITH
LEVEL R1 REINFORCEMENT & GLASS TYPES 1-4
(REINFORCEMENTS SHOWN IN FIGURES
ABOVE APPLY TO ALL FRAME TYPES &
CONFIGURATIONS)

NOTES:

1) USE THIS TABLE FOR ALL WINDOWS INSTALLED THROUGH THE FRAME OR INTEGRAL FIN.

2) FRAME DIMENSIONS ARE BUCK. SASH HEIGHT IS AS PER THE FIGURE.

3) FOR SIZES NOT SHOWN, ROUND UP TO THE NEXT AVAILABLE WIDTH OR HEIGHT DIMENSION SHOWN ON THE TABLE.

ANTHONY LYNN MILLER
LICENSE
No. 58705
7/30/15
STATE OF
FLORIDA
PROFESSIONAL ENGINEER
A. LYNN MILLER, P.E.
P.E.# 58705

PGT®
1070 TECHNOLOGY DRIVE
N. VENICE, FL 34275
(941)-480-1600
CERT. OF AUTH. #29296

Approved as complying with the Florida Building Code
Date Sept. 17, 2015
NOA# 15-0812.03
Miami Dade Product Control
By Manuel Perez

Revised By:	Date:	Revision:
Revised By:	Date:	Revision:

Description: DESIGN PRESSURE TABLE			Drawn By: J ROSOWSKI
Title: DOUBLE HUNG WINDOW INSTALLATION - NI			Date: 05/15/15
Series/Model: DH-5460	Scale: NTS	Sheet: 6 OF 12	Drawing No. MD-DH5460-01	Rev:

TABLE 5:

Glass Types: 2, 3 & 4 / Reinforcement Level: R2	Bottom Sash Description for given Range	Sash Height Range (in)	Final Design Pressure (lbs/ft²) — Window Buck Width (in) 18		24		32		36		40		48		52.125	
Window Buck Height (in)																
24	Equal-lite	11.266	+65.0	-130.0	+65.0	-130.0	+65.0	-130.0	+65.0	-130.0	+65.0	-130.0	+65.0	-121.0	+65.0	-112.0
28	Standard Cottage	13.517 - 15.516	+65.0	-130.0	+65.0	-130.0	+65.0	-130.0	+65.0	-130.0	+65.0	-130.0	+65.0	-116.0	+65.0	-107.0
	Equal-lite	11.517 - 13.516	+65.0	-130.0	+65.0	-130.0	+65.0	-130.0	+65.0	-130.0	+65.0	-130.0	+65.0	-130.0	+65.0	-130.0
	Standard Proview	11.266 - 11.516	+65.0	-130.0	+65.0	-130.0	+65.0	-130.0	+65.0	-130.0	+65.0	-130.0	+65.0	-130.0	+65.0	-123.0
37.375	Tallest	21.517 - 24.891	+65.0	-130.0	+65.0	-130.0	+65.0	-130.0	+65.0	-130.0	+65.0	-93.0	+65.0	-104.0	+65.0	-96.0
	Standard Cottage	18.017 - 21.516	+65.0	-130.0	+65.0	-130.0	+65.0	-130.0	+65.0	-130.0	+65.0	-130.0	+65.0	-119.8	+65.0	-108.0
	Equal-lite	15.017 - 18.016	+65.0	-130.0	+65.0	-130.0	+65.0	-130.0	+65.0	-130.0	+65.0	-130.0	+65.0	-120.7	+65.0	-108.8
	Standard Proview	11.517 - 15.016	+65.0	-130.0	+65.0	-130.0	+65.0	-130.0	+65.0	-130.0	+65.0	-130.0	+65.0	-121.1	+65.0	-109.0
	Shortest	11.266 - 11.516	+65.0	-130.0	+65.0	-130.0	+65.0	-130.0	+65.0	-130.0	+65.0	-130.0	+65.0	-130.0	+65.0	-117.8
44	Tallest	29.517 - 31.516	+65.0	-130.0	+65.0	-130.0	+65.0	-130.0	+65.0	-130.0	+65.0	-130.0	+65.0	-116.0	+65.0	-103.7
	Custom Size	26.517 - 29.516	+65.0	-130.0	+65.0	-130.0	+65.0	-130.0	+65.0	-130.0	+65.0	-130.0	+65.0	-111.4	+65.0	-99.7
	Standard Cottage	23.517 - 26.516	+65.0	-130.0	+65.0	-130.0	+65.0	-130.0	+65.0	-130.0	+65.0	-130.0	+65.0	-109.3	+65.0	-98.0
	Equal-lite	20.517 - 23.516	+65.0	-130.0	+65.0	-130.0	+65.0	-130.0	+65.0	-130.0	+65.0	-130.0	+65.0	-108.3	+65.0	-97.3
	Custom Size	18.016 - 20.516	+65.0	-130.0	+65.0	-130.0	+65.0	-130.0	+65.0	-130.0	+65.0	-130.0	+65.0	-109.3	+65.0	-98.1
	Standard Proview	11.517 - 18.015	+65.0	-130.0	+65.0	-130.0	+65.0	-130.0	+65.0	-130.0	+65.0	-130.0	+65.0	-105.7	+65.0	-94.4
	Shortest	11.266 - 11.516	+65.0	-130.0	+65.0	-130.0	+65.0	-130.0	+65.0	-130.0	+65.0	-130.0	+65.0	-119.8	+65.0	-107.1
48	Tallest	27.517 - 35.141	+65.0	-130.0	+65.0	-118.3	+65.0	-106.5	+65.0	-105.1	+65.0	-105.1	+65.0	-100.9	+65.0	-89.6
	Standard Cottage	23.517 - 27.516	+65.0	-130.0	+65.0	-130.0	+65.0	-130.0	+65.0	-130.0	+65.0	-130.0	+65.0	-101.7	+65.0	-91.0
	Equal-lite	20.517 - 23.516	+65.0	-130.0	+65.0	-130.0	+65.0	-130.0	+65.0	-130.0	+65.0	-130.0	+65.0	-102.7	+65.0	-91.9
	Standard Proview	18.016 - 20.516	+65.0	-130.0	+65.0	-130.0	+65.0	-130.0	+65.0	-130.0	+65.0	-130.0	+65.0	-104.1	+65.0	-93.2
	Custom Size	14.517 - 18.015	+65.0	-130.0	+65.0	-130.0	+65.0	-128.7	+65.0	-128.7	+65.0	-128.7	+65.0	-104.7	+65.0	-93.4
	Custom Size	11.517 - 14.516	+65.0	-130.0	+65.0	-120.7	+65.0	-109.0	+65.0	-107.9	+65.0	-107.9	+65.0	-107.9	+65.0	-96.8
	Shortest	11.266 - 11.516	+65.0	-130.0	+65.0	-119.4	+65.0	-107.6	+65.0	-106.4	+65.0	-106.4	+65.0	-106.4	+65.0	-102.7
49.625	Tallest	30.517 - 36.766	+65.0	-130.0	+65.0	-110.9	+65.0	-98.5	+65.0	-96.4	+65.0	-96.3	+65.0	-96.3	+65.0	-90.6
	Standard Cottage	27.517 - 30.516	+65.0	-130.0	+65.0	-130.0	+65.0	-130.0	+65.0	-130.0	+65.0	-130.0	+65.0	-102.1	+65.0	-91.1
	Custom Size	24.517 - 27.516	+65.0	-130.0	+65.0	-130.0	+65.0	-130.0	+65.0	-130.0	+65.0	-130.0	+65.0	-100.9	+65.0	-90.2
	Equal-lite	21.517 - 24.516	+65.0	-130.0	+65.0	-130.0	+65.0	-130.0	+65.0	-130.0	+65.0	-130.0	+65.0	-100.7	+65.0	-90.0
	Standard Proview	18.016 - 21.516	+65.0	-130.0	+65.0	-130.0	+65.0	-130.0	+65.0	-130.0	+65.0	-130.0	+65.0	-101.0	+65.0	-90.2
	Custom Size	14.517 - 18.015	+65.0	-130.0	+65.0	-128.1	+65.0	-117.2	+65.0	-116.7	+65.0	-116.7	+65.0	-103.3	+65.0	-92.0
	Custom Size	11.517 - 14.516	+65.0	-130.0	+65.0	-112.9	+65.0	-100.6	+65.0	-98.8	+65.0	-98.7	+65.0	-98.7	+65.0	-95.5
	Shortest	11.266 - 11.516	+65.0	-130.0	+65.0	-111.8	+65.0	-99.4	+65.0	-97.5	+65.0	-97.3	+65.0	-97.3	+65.0	-97.3
62	Tallest	36.517 - 36.767	+65.0	-130.0	+65.0	-110.9	+65.0	-98.5	+65.0	-96.4	+65.0	-96.3	+65.0	-93.4	+65.0	-82.6
	Standard Cottage	34.517 - 36.516	+65.0	-130.0	+65.0	-111.9	+65.0	-99.6	+65.0	-97.7	+65.0	-97.6	+65.0	-91.4	+65.0	-80.8
	Custom Size	31.517 - 34.516	+65.0	-130.0	+65.0	-121.5	+65.0	-109.9	+65.0	-108.9	+65.0	-108.9	+65.0	-89.8	+65.0	-79.4
	Equal-lite	28.517 - 31.516	+65.0	-130.0	+65.0	-130.0	+65.0	-128.7	+65.0	-128.7	+65.0	-119.5	+65.0	-89.4	+65.0	-79.1
	Custom Size	25.517 - 28.516	+65.0	-130.0	+65.0	-120.7	+65.0	-109.0	+65.0	-107.9	+65.0	-107.9	+65.0	-89.8	+65.0	-79.4
	Standard Proview	22.517 - 25.516	+65.0	-128.2	+65.0	-107.0	+65.0	-94.5	+65.0	-92.2	+65.0	-91.7	+65.0	-91.0	+65.0	-80.4
	Custom Size	20.017 - 22.516	+65.0	-118.3	+65.0	-97.8	+65.0	-85.1	+65.0	-82.2	+65.0	-81.0	+65.0	-80.9	+65.0	-80.9
	Custom Size	18.016 - 20.016	+65.0	-111.3	+65.0	-91.5	+65.0	-78.8	+65.0	-75.6	+65.0	-74.0	+65.0	-73.6	+65.0	-73.6
	Shortest	16.928 - 18.015	+65.0	-107.9	+65.0	-88.4	+65.0	-75.8	+65.0	-72.5	+65.0	-70.6	+65.0	-70.0	+65.0	-70.0
75	Tallest	38.517 - 41.266	+65.0	-114.4	+65.0	-94.3	+65.0	-81.6	+65.0	-78.5	+65.0	-77.0	+65.0	-76.8	+65.0	-72.9
	Equal-lite	36.517 - 38.516	+65.0	-124.7	+65.0	-103.8	+65.0	-91.1	+65.0	-88.6	+65.0	-87.9	+65.0	-83.4	+65.0	-72.9
	Custom Size	34.517 - 36.516	+65.0	-124.1	+65.0	-103.2	+65.0	-90.5	+65.0	-87.9	+65.0	-87.2	+65.0	-83.4	+65.0	-72.9
	Custom Size	31.517 - 34.516	+65.0	-113.0	+65.0	-93.0	+65.0	-80.3	+65.0	-77.2	+65.0	-75.6	+65.0	-75.3	+65.0	-72.9
	Standard Proview	29.928 - 31.516	+65.0	-107.9	+65.0	-88.4	+65.0	-75.8	+65.0	-72.5	+65.0	-70.6	+65.0	-70.0	+65.0	-70.0
84	Equal-lite	40.017 - 41.266	+65.0	-111.3	+65.0	-91.5	+65.0	-78.8	+65.0	-75.6	+65.0	-74.0	+65.0	-73.6	+65.0	-70.2
	Custom Size	38.928 - 40.016	+65.0	-107.9	+65.0	-88.4	+65.0	-75.8	+65.0	-72.5	+65.0	-70.6	+65.0	-70.0	+65.0	-70.0
86.338	Custom Size	41.266	+65.0	-107.9	+65.0	-88.4	+65.0	-75.8	+65.0	-72.5	+65.0	-70.6	+65.0	-70.0	+65.0	-70.0

SEE TABLE 7, SHEET 9 FOR ANCHOR GROUP AND QUANTITY.

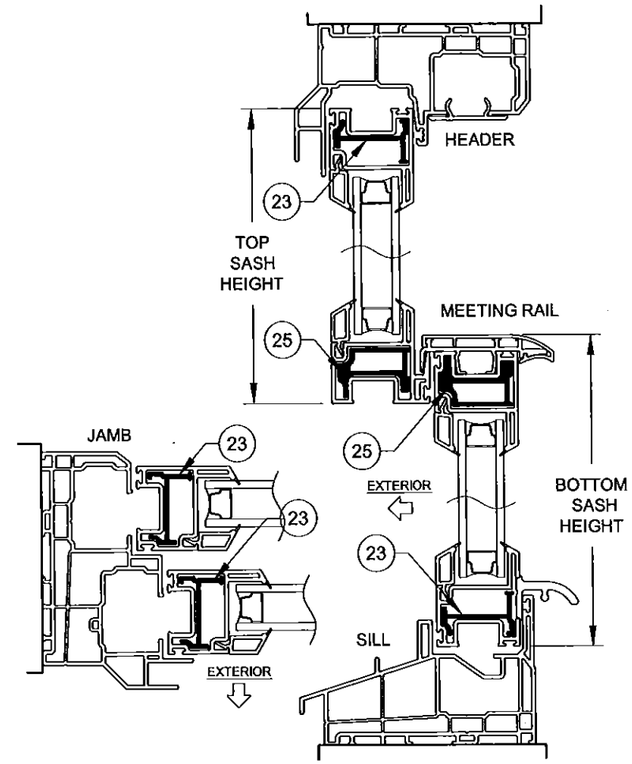

SECTION DETAIL FOR WINDOWS WITH LEVEL R2 REINFORCEMENT & GLASS TYPES 1-4

(REINFORCEMENTS SHOWN IN FIGURES ABOVE APPLY TO ALL FRAME TYPES & CONFIGURATIONS)

NOTES:

1) USE THIS TABLE FOR ALL WINDOWS INSTALLED THROUGH THE FRAME OR INTEGRAL FIN.

2) FRAME DIMENSIONS ARE BUCK. SASH HEIGHT IS AS PER THE FIGURE.

3) FOR SIZES NOT SHOWN, ROUND UP TO THE NEXT AVAILABLE WIDTH OR HEIGHT DIMENSION SHOWN ON THE TABLE.

ANTHONY LYNN MILLER LICENSE No. 58705 STATE OF FLORIDA PROFESSIONAL ENGINEER
7/30/15
A. LYNN MILLER, P.E.
P.E.# 58705

PGT®
1070 TECHNOLOGY DRIVE
N. VENICE, FL 34275
(941)-480-1600
CERT. OF AUTH. #29296

Approved as complying with the Florida Building Code
Date Sept. 11, 2015
NOA# 15-0812.03
Miami Dade Product Control
By Manuel Perez

Revised By:	Date:	Revision:
Revised By:	Date:	Revision:

Description: DESIGN PRESSURE TABLE

Drawn By: J ROSOWSKI

Title: DOUBLE HUNG WINDOW INSTALLATION - NI

Date: 05/15/15

Series/Model:	Scale:	Sheet:	Drawing No.	Rev:
DH-5460	NTS	7 OF 12	MD-DH5460-01	

FOR ANCHOR GROUP D, TABLE 7, SHEET 9 MAY BE USED.

TABLE 6:

Anchor Quantities Required for "Through-Frame" Installation

Glass Types: 1, 2, 3 & 4 — Reinforcement Level: R1

Anchor Group A

Window Buck Height (in)	Bottom Sash Description for given Range	Bottom Sash Height Range (in)	18" Wide Jamb Above MR	18" Jamb Below MR	18" Header	24" Wide Jamb Above MR	24" Jamb Below MR	24" Header	32" Wide Jamb Above MR	32" Jamb Below MR	32" Header	36" Wide Jamb Above MR	36" Jamb Below MR	36" Header	40" Wide Jamb Above MR	40" Jamb Below MR	40" Header	48" Wide Jamb Above MR	48" Jamb Below MR	48" Header	52-1/8" Wide Jamb Above MR	52-1/8" Jamb Below MR	52-1/8" Header
24	Equal-lite	11.266	1	2	1	1	2	1	1	2	2	1	2	2	1	2	2	1	2	2	1	2	2
28	Standard Cottage	13.517 - 15.516	1	2	1	1	2	1	1	2	2	1	2	2	1	2	2	1	3	2	1	3	2
	Equal-lite	11.517 - 13.516	1	2	1	1	2	1	1	2	2	2	2	2	2	2	2	2	3	2	2	3	3
	Standard Proview	11.266 - 11.516	1	2	1	1	2	1	1	2	2	2	2	2	2	2	2	2	2	2	2	2	2
37.375	Tallest	21.517 - 24.891	1	2	1	1	2	1	1	3	2	1	3	2	1	3	2	1	3	2	1	4	2
	Standard Cottage	18.017 - 21.516	2	2	1	2	2	1	2	3	2	2	3	2	2	3	2	2	3	2	2	3	2
	Equal-lite	15.017 - 18.016	2	2	1	2	2	1	2	2	2	2	3	2	2	3	2	2	3	3	2	3	3
	Standard Proview	11.517 - 15.016	3	2	1	3	2	1	3	2	2	3	2	2	3	2	3	3	2	3	3	2	3
	Shortest	11.266 - 11.516	3	2	1	3	2	1	3	2	2	3	2	2	3	2	3	3	2	3	3	2	3
44	Tallest	29.517 - 31.516	1	3	1	1	3	1	1	3	2	1	4	2	1	4	2	1	4	2	1	4	2
	Custom Size	26.517 - 29.516	2	3	1	2	3	1	2	3	2	2	4	2	2	4	2	2	4	2	2	4	2
	Standard Cottage	23.517 - 26.516	2	3	1	2	3	1	2	3	2	2	3	2	2	4	2	2	4	2	2	4	2
	Equal-lite	20.517 - 23.516	2	2	1	2	2	1	2	3	2	2	3	2	2	3	2	2	3	2	2	3	2
	Custom Size	18.016 - 20.516	3	2	1	3	2	1	3	3	2	3	3	2	3	3	3	3	3	3	3	3	3
	Standard Proview	11.517 - 18.015	3	2	1	3	2	1	3	2	2	3	3	2	3	3	3	3	3	3	3	3	3
	Shortest	11.266 - 11.516	3	2	1	3	2	1	3	2	2	3	2	2	3	2	3	3	2	3	3	2	3
46	Tallest	27.517 - 35.141	2	3	1	2	3	1	2	3	2	2	3	2	2	4	2	2	4	2	2	4	2
	Standard Cottage	23.517 - 27.516	2	3	1	2	3	1	2	3	2	2	4	2	2	4	2	2	3	2	2	3	2
	Equal-lite	20.517 - 23.516	3	2	1	3	2	1	3	3	2	3	3	2	3	3	3	3	3	3	3	3	3
	Standard Proview	18.016 - 20.516	3	2	1	3	2	1	3	3	2	3	3	2	3	3	3	3	3	3	3	3	3
	Custom Size	14.517 - 18.015	3	2	1	3	2	1	3	2	2	3	2	2	3	3	3	3	3	3	3	2	3
	Custom Size	11.517 - 14.516	3	2	1	3	2	1	3	2	2	3	2	2	3	2	2	3	2	3	3	2	3
	Shortest	11.266 - 11.516	3	2	1	3	2	1	3	2	2	3	2	2	3	2	2	3	2	3	3	2	3
49.625	Tallest	30.517 - 36.766	2	3	1	2	3	1	2	3	2	2	3	2	2	4	2	2	4	2	2	4	2
	Standard Cottage	27.517 - 30.516	2	3	1	2	3	1	2	4	2	2	4	2	2	4	2	2	4	2	2	4	2
	Custom Size	24.517 - 27.516	3	3	1	3	3	1	3	3	2	3	4	2	3	4	2	3	3	2	3	3	2
	Equal-lite	21.517 - 24.516	3	2	1	3	2	1	3	3	2	3	3	2	3	3	3	3	3	3	3	3	3
	Standard Proview	18.016 - 21.516	3	2	1	3	2	1	3	3	2	3	3	2	3	3	3	3	3	3	3	3	3
	Custom Size	14.517 - 18.015	3	2	1	3	2	1	3	2	2	3	2	2	3	2	2	3	3	3	3	2	3
	Custom Size	11.517 - 14.516	3	2	1	3	2	1	3	2	2	3	2	2	3	2	2	3	2	3	3	2	3
	Shortest	11.266 - 11.516	3	2	1	3	2	1	3	2	2	3	2	2	3	2	2	3	2	3	3	2	3
62	Tallest	36.517 - 36.767	3	3	1	3	3	1	3	3	2	3	3	2	3	4	2	3	4	2	3	4	2
	Standard Cottage	34.517 - 36.516	3	3	1	3	3	1	3	3	2	3	3	2	3	4	2	3	4	2	3	4	2
	Custom Size	31.517 - 34.516	3	3	1	3	3	1	3	3	2	3	3	2	3	4	2	3	4	2	3	4	2
	Equal-lite	28.517 - 31.516	3	3	1	3	3	1	3	3	2	3	4	2	3	4	2	3	4	2	3	3	2
	Custom Size	25.517 - 28.516	3	3	1	3	3	1	3	3	2	3	3	2	3	3	2	3	3	3	3	3	3
	Standard Proview	22.517 - 25.516	3	3	1	3	3	1	3	3	2	3	3	2	3	3	2	3	3	3	3	3	3
	Custom Size	20.017 - 22.516	4	2	1	4	2	1	4	2	2	4	2	2	4	2	2	4	2	2	4	3	3
	Custom Size	18.016 - 20.016	4	2	1	4	2	1	4	2	2	4	2	2	4	2	2	4	2	2	4	2	3
	Shortest	16.928 - 18.016	4	2	1	4	2	1	4	2	2	4	2	2	4	2	2	4	2	2	4	2	3
75	Tallest	38.517 - 41.266	3	4	1	3	4	1	3	4	2	3	4	2	3	4	2	3	4	2	3	4	2
	Equal-lite	36.517 - 38.516	3	3	1	3	3	1	3	3	2	3	3	2	3	3	2	3	4	2	3	4	2
	Custom Size	34.517 - 36.516	4	3	1	4	3	1	4	3	2	4	3	2	4	3	2	4	4	3	4	4	3
	Custom Size	31.517 - 34.516	4	3	1	4	3	1	4	3	2	4	3	2	4	3	2	4	3	2	4	3	3
	Standard Proview	29.928 - 31.516	4	3	1	4	3	1	4	3	2	4	3	2	4	3	2	4	3	2	4	3	3
84	Equal-lite	40.017 - 41.266	4	4	1	4	4	1	4	4	2	4	4	2	4	4	2	4	4	2	4	4	2
	Custom Size	38.928 - 40.016	4	4	1	4	4	1	4	4	2	4	4	2	4	4	2	4	4	2	4	4	3
86.338	Custom Size	41.266	4	4	1	4	4	1	4	4	2	4	4	2	4	4	2	4	4	2	4	4	3

Anchor Group B

Window Buck Height (in)	Bottom Sash Description for given Range	Bottom Sash Height Range (in)	18" Wide Jamb Above MR	18" Jamb Below MR	18" Header	24" Wide Jamb Above MR	24" Jamb Below MR	24" Header	32" Wide Jamb Above MR	32" Jamb Below MR	32" Header	36" Wide Jamb Above MR	36" Jamb Below MR	36" Header	40" Wide Jamb Above MR	40" Jamb Below MR	40" Header	48" Wide Jamb Above MR	48" Jamb Below MR	48" Header	52-1/8" Wide Jamb Above MR	52-1/8" Jamb Below MR	52-1/8" Header
24	Equal-lite	11.266	1	2	1	1	2	1	1	2	2	1	2	2	1	2	2	1	2	2	1	2	2
28	Standard Cottage	13.517 - 15.516	1	2	1	1	2	1	1	2	2	1	2	2	1	2	2	1	2	2	1	2	2
	Equal-lite	11.517 - 13.516	1	2	1	1	2	1	1	2	2	1	2	2	1	2	2	1	2	2	1	2	2
	Standard Proview	11.266 - 11.516	1	2	1	1	2	1	1	2	2	1	2	2	1	2	2	1	2	2	1	2	2
37.375	Tallest	21.517 - 24.891	1	2	1	1	2	1	1	2	2	1	2	2	1	2	2	1	2	2	1	3	2
	Standard Cottage	18.017 - 21.516	2	2	1	2	2	1	2	2	2	2	2	2	2	2	2	2	2	2	2	2	2
	Equal-lite	15.017 - 18.016	2	2	1	2	2	1	2	2	2	2	2	2	2	2	2	2	2	2	2	2	2
	Standard Proview	11.517 - 15.016	3	2	1	3	2	1	3	2	2	3	2	2	3	2	2	3	2	2	3	2	2
	Shortest	11.266 - 11.516	3	2	1	3	2	1	3	2	2	3	2	2	3	2	2	3	2	2	3	2	2
44	Tallest	29.517 - 31.516	1	3	1	1	3	1	1	3	2	1	3	2	1	3	2	1	3	2	1	3	2
	Custom Size	26.517 - 29.516	2	3	1	2	3	1	2	3	2	2	3	2	2	3	2	2	3	2	2	3	2
	Standard Cottage	23.517 - 26.516	2	3	1	2	3	1	2	3	2	2	3	2	2	3	2	2	3	2	2	3	2
	Equal-lite	20.517 - 23.516	2	2	1	2	2	1	2	2	2	2	2	2	2	2	2	2	2	2	2	2	2
	Custom Size	18.016 - 20.516	3	2	1	3	2	1	3	2	2	3	2	2	3	2	2	3	2	2	3	2	2
	Standard Proview	11.517 - 18.015	3	2	1	3	2	1	3	2	2	3	2	2	3	2	2	3	2	2	3	2	2
	Shortest	11.266 - 11.516	3	2	1	3	2	1	3	2	2	3	2	2	3	2	2	3	2	2	3	2	2
46	Tallest	27.517 - 35.141	2	3	1	2	3	1	2	3	2	2	3	2	2	3	2	2	3	2	2	3	2
	Standard Cottage	23.517 - 27.516	2	3	1	2	3	1	2	3	2	2	3	2	2	3	2	2	3	2	2	3	2
	Equal-lite	20.517 - 23.516	3	2	1	3	2	1	3	2	2	3	2	2	3	2	2	3	2	2	3	2	2
	Standard Proview	18.016 - 20.516	3	2	1	3	2	1	3	2	2	3	2	2	3	2	2	3	2	2	3	2	2
	Custom Size	14.517 - 18.015	3	2	1	3	2	1	3	2	2	3	2	2	3	2	2	3	2	2	3	2	2
	Custom Size	11.517 - 14.516	3	2	1	3	2	1	3	2	2	3	2	2	3	2	2	3	2	2	3	2	2
	Shortest	11.266 - 11.516	3	2	1	3	2	1	3	2	2	3	2	2	3	2	2	3	2	2	3	2	2
49.625	Tallest	30.517 - 36.766	2	3	1	2	3	1	2	3	2	2	3	2	2	3	2	2	3	2	2	3	2
	Standard Cottage	27.517 - 30.516	2	3	1	2	3	1	2	3	2	2	3	2	2	3	2	2	3	2	2	3	2
	Custom Size	24.517 - 27.516	3	3	1	3	3	1	3	3	2	3	3	2	3	3	2	3	3	2	3	3	2
	Equal-lite	21.517 - 24.516	3	2	1	3	2	1	3	2	2	3	2	2	3	2	2	3	2	2	3	2	2
	Standard Proview	18.016 - 21.516	3	2	1	3	2	1	3	2	2	3	2	2	3	2	2	3	2	2	3	2	2
	Custom Size	14.517 - 18.015	3	2	1	3	2	1	3	2	2	3	2	2	3	2	2	3	2	2	3	2	2
	Custom Size	11.517 - 14.516	3	2	1	3	2	1	3	2	2	3	2	2	3	2	2	3	2	2	3	2	2
	Shortest	11.266 - 11.516	3	2	1	3	2	1	3	2	2	3	2	2	3	2	2	3	2	2	3	2	2
62	Tallest	36.517 - 36.767	3	3	1	3	3	1	3	3	2	3	3	2	3	3	2	3	3	2	3	3	2
	Standard Cottage	34.517 - 36.516	3	3	1	3	3	1	3	3	2	3	3	2	3	3	2	3	3	2	3	3	2
	Custom Size	31.517 - 34.516	3	3	1	3	3	1	3	3	2	3	3	2	3	3	2	3	3	2	3	3	2
	Equal-lite	28.517 - 31.516	3	3	1	3	3	1	3	3	2	3	3	2	3	3	2	3	3	2	3	3	2
	Custom Size	25.517 - 28.516	3	3	1	3	3	1	3	3	2	3	3	2	3	3	2	3	3	2	3	3	2
	Standard Proview	22.517 - 25.516	3	3	1	3	3	1	3	3	2	3	3	2	3	3	2	3	3	2	3	3	2
	Custom Size	20.017 - 22.516	4	2	1	4	2	1	4	2	2	4	2	2	4	2	2	4	2	2	4	2	2
	Custom Size	18.016 - 20.016	4	2	1	4	2	1	4	2	2	4	2	2	4	2	2	4	2	2	4	2	2
	Shortest	16.928 - 18.016	4	2	1	4	2	1	4	2	2	4	2	2	4	2	2	4	2	2	4	2	2
75	Tallest	38.517 - 41.266	3	4	1	3	4	1	3	4	2	3	4	2	3	4	2	3	4	2	3	4	2
	Equal-lite	36.517 - 38.516	3	3	1	3	3	1	3	3	2	3	3	2	3	3	2	3	3	2	3	3	2
	Custom Size	34.517 - 36.516	4	3	1	4	3	1	4	3	2	4	3	2	4	3	2	4	3	2	4	3	2
	Custom Size	31.517 - 34.516	4	3	1	4	3	1	4	3	2	4	3	2	4	3	2	4	3	2	4	3	2
	Standard Proview	29.928 - 31.516	4	3	1	4	3	1	4	3	2	4	3	2	4	3	2	4	3	2	4	3	2
84	Equal-lite	40.017 - 41.266	4	4	1	4	4	1	4	4	2	4	4	2	4	4	2	4	4	2	4	4	2
	Custom Size	38.928 - 40.016	4	4	1	4	4	1	4	4	2	4	4	2	4	4	2	4	4	2	4	4	2
86.338	Custom Size	41.266	4	4	1	4	4	1	4	4	2	4	4	2	4	4	2	4	4	2	4	4	2

Anchor Group C

Window Buck Height (in)	Bottom Sash Description for given Range	Bottom Sash Height Range (in)	18" Wide Jamb Above MR	18" Jamb Below MR	18" Header	24" Wide Jamb Above MR	24" Jamb Below MR	24" Header	32" Wide Jamb Above MR	32" Jamb Below MR	32" Header	36" Wide Jamb Above MR	36" Jamb Below MR	36" Header	40" Wide Jamb Above MR	40" Jamb Below MR	40" Header	48" Wide Jamb Above MR	48" Jamb Below MR	48" Header	52-1/8" Wide Jamb Above MR	52-1/8" Jamb Below MR	52-1/8" Header
24	Equal-lite	11.266	1	2	1	1	2	1	1	2	2	1	2	2	1	2	2	1	2	2	1	2	2
28	Standard Cottage	13.517 - 15.516	1	2	1	1	2	1	1	2	2	1	2	2	1	2	2	1	2	2	1	2	2
	Equal-lite	11.517 - 13.516	1	2	1	1	2	1	1	2	2	1	2	2	1	2	2	2	2	2	2	2	2
	Standard Proview	11.266 - 11.516	1	2	1	1	2	1	1	2	2	1	2	2	1	2	2	2	2	2	2	2	2
37.375	Tallest	21.517 - 24.891	1	2	1	1	2	1	1	2	2	1	3	2	1	3	2	1	3	2	1	3	2
	Standard Cottage	18.017 - 21.516	2	2	1	2	2	1	2	2	2	2	2	2	2	3	2	2	3	2	2	3	2
	Equal-lite	15.017 - 18.016	2	2	1	2	2	1	2	2	2	2	2	2	2	2	2	2	2	2	2	2	2
	Standard Proview	11.517 - 15.016	3	2	1	3	2	1	3	2	2	3	2	2	3	2	2	3	2	2	3	2	2
	Shortest	11.266 - 11.516	3	2	1	3	2	1	3	2	2	3	2	2	3	2	2	3	2	2	3	2	2
44	Tallest	29.517 - 31.516	1	3	1	1	3	1	1	3	2	1	3	2	1	3	2	1	3	2	1	3	2
	Custom Size	26.517 - 29.516	2	3	1	2	3	1	2	3	2	2	3	2	2	3	2	2	3	2	2	3	2
	Standard Cottage	23.517 - 26.516	2	3	1	2	3	1	2	3	2	2	3	2	2	3	2	2	3	2	2	3	2
	Equal-lite	20.517 - 23.516	2	2	1	2	2	1	2	2	2	2	3	2	2	3	2	2	3	2	2	3	2
	Custom Size	18.016 - 20.516	3	2	1	3	2	1	3	2	2	3	2	2	3	2	2	3	2	2	3	2	2
	Standard Proview	11.517 - 18.015	3	2	1	3	2	1	3	2	2	3	2	2	3	2	2	3	2	2	3	2	2
	Shortest	11.266 - 11.516	3	2	1	3	2	1	3	2	2	3	2	2	3	2	2	3	2	3	3	2	3
46	Tallest	27.517 - 35.141	2	3	1	2	3	1	2	3	2	2	3	2	2	3	2	2	3	2	2	3	2
	Standard Cottage	23.517 - 27.516	2	3	1	2	3	1	2	3	2	2	3	2	2	3	2	2	3	2	2	3	2
	Equal-lite	20.517 - 23.516	3	2	1	3	2	1	3	2	2	3	3	2	3	3	2	3	2	2	3	2	2
	Standard Proview	18.016 - 20.516	3	2	1	3	2	1	3	2	2	3	2	2	3	2	2	3	2	2	3	2	2
	Custom Size	14.517 - 18.015	3	2	1	3	2	1	3	2	2	3	2	2	3	2	2	3	2	2	3	2	2
	Custom Size	11.517 - 14.516	3	2	1	3	2	1	3	2	2	3	2	2	3	2	2	3	2	2	3	2	2
	Shortest	11.266 - 11.516	3	2	1	3	2	1	3	2	2	3	2	2	3	2	2	3	2	2	3	2	3
49.625	Tallest	30.517 - 36.766	2	3	1	2	3	1	2	3	2	2	3	2	2	3	2	2	3	2	2	3	2
	Standard Cottage	27.517 - 30.516	2	3	1	2	3	1	2	3	2	2	3	2	2	3	2	2	3	2	2	3	2
	Custom Size	24.517 - 27.516	3	3	1	3	3	1	3	3	2	3	3	2	3	3	2	3	3	2	3	3	2
	Equal-lite	21.517 - 24.516	3	2	1	3	2	1	3	2	2	3	3	2	3	3	2	3	3	2	3	2	2
	Standard Proview	18.016 - 21.516	3	2	1	3	2	1	3	2	2	3	2	2	3	2	2	3	2	2	3	2	2
	Custom Size	14.517 - 18.015	3	2	1	3	2	1	3	2	2	3	2	2	3	2	2	3	2	2	3	2	2
	Custom Size	11.517 - 14.516	3	2	1	3	2	1	3	2	2	3	2	2	3	2	2	3	2	2	3	2	2
	Shortest	11.266 - 11.516	3	2	1	3	2	1	3	2	2	3	2	2	3	2	2	3	2	2	3	2	3
62	Tallest	36.517 - 36.767	3	3	1	3	3	1	3	3	2	3	3	2	3	3	2	3	3	2	3	3	2
	Standard Cottage	34.517 - 36.516	3	3	1	3	3	1	3	3	2	3	3	2	3	3	2	3	3	2	3	3	2
	Custom Size	31.517 - 34.516	3	3	1	3	3	1	3	3	2	3	3	2	3	3	2	3	3	2	3	3	2
	Equal-lite	28.517 - 31.516	3	3	1	3	3	1	3	3	2	3	3	2	3	3	2	3	3	2	3	3	2
	Custom Size	25.517 - 28.516	3	3	1	3	3	1	3	3	2	3	3	2	3	3	2	3	3	2	3	3	2
	Standard Proview	22.517 - 25.516	3	3	1	3	3	1	3	3	2	3	3	2	3	3	2	3	3	2	3	3	2
	Custom Size	20.017 - 22.516	4	2	1	4	2	1	4	2	2	4	2	2	4	2	2	4	2	2	4	2	2
	Custom Size	18.016 - 20.016	4	2	1	4	2	1	4	2	2	4	2	2	4	2	2	4	2	2	4	2	2
	Shortest	16.928 - 18.016	4	2	1	4	2	1	4	2	2	4	2	2	4	2	2	4	2	2	4	2	2
75	Tallest	38.517 - 41.266	3	4	1	3	4	1	3	4	2	3	4	2	3	4	2	3	4	2	3	4	2
	Equal-lite	36.517 - 38.516	3	3	1	3	3	1	3	3	2	3	3	2	3	3	2	3	3	2	3	3	2
	Custom Size	34.517 - 36.516	4	3	1	4	3	1	4	3	2	4	3	2	4	3	2	4	3	2	4	3	2
	Custom Size	31.517 - 34.516	4	3	1	4	3	1	4	3	2	4	3	2	4	3	2	4	3	2	4	3	2
	Standard Proview	29.928 - 31.516	4	3	1	4	3	1	4	3	2	4	3	2	4	3	2	4	3	2	4	3	2
84	Equal-lite	40.017 - 41.266	4	4	1	4	4	1	4	4	2	4	4	2	4	4	2	4	4	2	4	4	2
	Custom Size	38.928 - 40.016	4	4	1	4	4	1	4	4	2	4	4	2	4	4	2	4	4	2	4	4	2
86.338	Custom Size	41.266	4	4	1	4	4	1	4	4	2	4	4	2	4	4	2	4	4	2	4	4	2

SEE TABLE 4, SHEET 6 FOR DESIGN PRESSURES WHEN USING THIS TABLE.

Max. Anchor O.C. Spacing for "Integral-Fin" Installation	Anchor Group E	Anchor Group F
	2.8"	4"

NOTES:

1) USE THE ABOVE *"ANCHOR QUANTITIES REQUIRED.........."* TABLE FOR ANCHORS INSTALLED THROUGH THE FRAME.

2) USE THE ABOVE *"MAX. ANCHOR O.C. SPACING.........."* TABLE FOR ANCHORS INSTALLED THROUGH THE INTEGRAL FIN.

3) FRAME DIMENSIONS ARE BUCK. "MR"=MEETING RAIL.

4) FOR SIZES NOT SHOWN, ROUND UP TO THE NEXT AVAILABLE WIDTH OR HEIGHT DIMENSION SHOWN ON THE TABLE.

5) REFER TO TABLES 2 & 3, SHEET 2 FOR ANCHOR GROUP DESCRIPTIONS.

ANTHONY LYNN MILLER LICENSE No. 58705 STATE OF FLORIDA PROFESSIONAL ENGINEER
7/30/15

A. LYNN MILLER, P.E.
P.E.# 58705

PGT®

1070 TECHNOLOGY DRIVE
N. VENICE, FL 34275
(941)-480-1600

CERT. OF AUTH. #29296

Approved as complying with the Florida Building Code
Date Sept. 17, 2015
NOA# 15-0812.03
Miami Dade Product Control
By Manuel Perez

Revised By:	Date:	Revision:
Revised By:	Date:	Revision:

Description: ANCHOR QUANTITY TABLE — Drawn By: J ROSOWSKI

Title: DOUBLE HUNG WINDOW INSTALLATION - NI — Date: 05/15/15

Series/Model: DH-5460 — Scale: NTS — Sheet: 8 OF 12 — Drawing No. MD-DH5460-01 — Rev:

TABLE 7:

Anchor Quantities Required for "Through-Frame" Installation

Glass Types: 2, 3 & 4 — Reinforcement Level: R2

Anchor Group B

Window Buck Height (in)	Bottom Sash Description for given Range	Bottom Sash Height Range (in)	18" Wide			24" Wide			32" Wide			36" Wide			40" Wide			48" Wide			52-1/8" Wide		
			Jamb			Jamb			Jamb			Jamb			Jamb			Jamb			Jamb		
			Above MR	Below MR	Header	Above MR	Below MR	Header	Above MR	Below MR	Header	Above MR	Below MR	Header	Above MR	Below MR	Header	Above MR	Below MR	Header	Above MR	Above MR	Header
24	Equal-lite	11.266	1	2	1	1	2	1	1	2	2	1	2	2	1	2	2	1	2	2	1	2	2
28	Standard Cottage	13.517 - 15.516	1	2	1	1	2	1	1	2	2	1	2	2	1	2	2	1	2	2	1	2	2
28	Equal-lite	11.517 - 13.516	1	2	1	1	2	1	1	2	2	1	2	2	1	2	2	2	2	2	2	2	2
28	Standard Proview	11.266 - 11.516	1	2	1	1	2	1	1	2	2	1	2	2	1	2	2	2	2	2	2	2	2
37.375	Tallest	21.517 - 24.891	1	2	1	1	2	1	1	3	2	1	3	2	1	2	2	1	3	2	1	3	2
37.375	Standard Cottage	18.017 - 21.516	2	2	1	2	2	1	2	2	2	2	3	2	2	3	2	2	3	2	2	3	2
37.375	Equal-lite	15.017 - 18.016	2	2	1	2	2	1	2	2	2	2	2	2	2	2	2	2	3	2	2	3	2
37.375	Standard Proview	11.517 - 15.016	3	2	1	3	2	1	3	2	2	3	2	2	3	2	2	3	2	3	3	2	3
37.375	Shortest	11.266 - 11.516	3	2	1	3	2	1	3	2	2	3	2	2	3	2	2	3	2	3	3	2	3
44	Tallest	29.517 - 31.516	1	3	1	1	3	1	1	3	2	1	4	2	1	4	2	1	4	2	1	4	2
44	Custom Size	26.517 - 29.516	2	3	1	2	3	1	2	3	2	2	3	2	2	4	2	2	4	2	2	4	2
44	Standard Cottage	23.517 - 26.516	2	3	1	2	3	1	2	3	2	2	3	2	2	3	2	2	3	2	2	3	2
44	Equal-lite	20.517 - 23.516	2	2	1	2	2	1	2	3	2	2	3	2	2	3	2	2	3	2	2	3	2
44	Custom Size	18.016 - 20.516	3	2	1	3	2	1	3	2	2	3	3	2	3	3	2	3	3	2	3	3	2
44	Standard Proview	11.517 - 18.015	3	2	1	3	2	1	3	2	2	3	2	2	3	2	3	3	2	3	3	2	3
44	Shortest	11.266 - 11.516	3	2	1	3	2	1	3	2	2	3	2	2	3	2	3	3	2	3	3	2	3
48	Tallest	27.517 - 35.141	2	3	1	2	3	1	2	3	2	2	3	2	2	4	2	2	4	2	2	4	2
48	Standard Cottage	23.517 - 27.516	2	3	1	2	3	1	2	3	2	2	3	2	2	3	2	2	3	2	2	3	2
48	Equal-lite	20.517 - 23.516	3	2	1	3	2	1	3	3	2	3	3	2	3	3	2	3	3	2	3	3	2
48	Standard Proview	18.016 - 20.516	3	2	1	3	2	1	3	2	2	3	3	2	3	3	2	3	3	3	3	3	3
48	Custom Size	14.517 - 18.015	3	2	1	3	2	1	3	2	2	3	2	2	3	2	3	3	2	3	3	2	3
48	Custom Size	11.517 - 14.516	3	2	1	3	2	1	3	2	2	3	2	2	3	2	2	3	2	3	3	2	3
48	Shortest	11.266 - 11.516	3	2	1	3	2	1	3	2	2	3	2	2	3	2	2	3	2	3	3	2	3
49.625	Tallest	30.517 - 36.766	2	3	1	2	3	1	2	3	2	2	3	2	2	3	2	2	4	2	2	4	2
49.625	Standard Cottage	27.517 - 30.516	2	3	1	2	3	1	2	3	2	2	3	2	2	4	2	2	4	2	2	4	2
49.625	Custom Size	24.517 - 27.516	3	3	1	3	3	1	3	3	2	3	3	2	3	3	2	3	3	2	3	3	2
49.625	Equal-lite	21.517 - 24.516	3	2	1	3	2	1	3	3	2	3	3	2	3	3	2	3	3	2	3	3	2
49.625	Standard Proview	18.016 - 21.516	3	2	1	3	2	1	3	2	2	3	3	2	3	3	2	3	3	3	3	3	3
49.625	Custom Size	14.517 - 18.015	3	2	1	3	2	1	3	2	2	3	2	2	3	2	2	3	2	3	3	2	3
49.625	Custom Size	11.517 - 14.516	3	2	1	3	2	1	3	2	2	3	2	2	3	2	2	3	2	3	3	2	3
49.625	Shortest	11.266 - 11.516	3	2	1	3	2	1	3	2	2	3	2	2	3	2	2	3	2	3	3	2	3
62	Tallest	36.517 - 36.767	3	3	1	3	3	1	3	3	2	3	3	2	3	3	2	3	4	2	3	4	2
62	Standard Cottage	34.517 - 36.516	3	3	1	3	3	1	3	3	2	3	3	2	3	3	2	3	4	2	3	4	2
62	Custom Size	31.517 - 34.516	3	3	1	3	3	1	3	3	2	3	3	2	3	4	2	3	4	2	3	3	2
62	Equal-lite	28.517 - 31.516	3	3	1	3	3	1	3	3	2	3	4	2	3	4	2	3	3	2	3	3	2
62	Custom Size	25.517 - 28.516	3	3	1	3	3	1	3	3	2	3	3	2	3	3	2	3	3	2	3	3	2
62	Standard Proview	22.517 - 25.516	3	3	1	3	3	1	3	3	2	3	3	2	3	3	2	3	3	3	3	3	3
62	Custom Size	20.017 - 22.516	4	2	1	4	2	1	4	2	2	4	2	2	4	2	2	4	2	2	4	2	3
62	Custom Size	18.016 - 20.016	4	2	1	4	2	1	4	2	2	4	2	2	4	2	2	4	2	2	4	2	2
62	Shortest	16.928 - 18.015	4	2	1	4	2	1	4	2	2	4	2	2	4	2	2	4	2	2	4	2	2
76	Tallest	38.517 - 41.266	3	4	1	3	4	1	3	4	2	3	4	2	3	4	2	3	4	2	3	4	2
76	Equal-lite	36.517 - 38.516	3	3	1	3	3	1	3	3	2	3	3	2	3	3	2	3	4	2	3	4	2
76	Custom Size	34.517 - 36.516	4	3	1	4	3	1	4	3	2	4	3	2	4	3	2	4	4	2	4	3	2
76	Custom Size	31.517 - 34.516	4	3	1	4	3	1	4	3	2	4	3	2	4	3	2	4	3	2	4	3	2
76	Standard Proview	29.928 - 31.516	4	3	1	4	3	1	4	3	2	4	3	2	4	3	2	4	3	2	4	3	2
84	Equal-lite	40.017 - 41.266	4	4	1	4	4	1	4	4	2	4	4	2	4	4	2	4	4	2	4	4	2
84	Custom Size	38.928 - 40.016	4	4	1	4	4	1	4	4	2	4	4	2	4	4	2	4	4	2	4	4	2
86.338	Custom Size	41.266	4	4	1	4	4	1	4	4	2	4	4	2	4	4	2	4	4	2	4	4	2

Anchor Group C

Window Buck Height (in)	Bottom Sash Description for given Range	Bottom Sash Height Range (in)	18" Wide			24" Wide			32" Wide			36" Wide			40" Wide			48" Wide			52-1/8" Wide		
			Jamb			Jamb			Jamb			Jamb			Jamb			Jamb			Jamb		
			Above MR	Below MR	Header	Above MR	Below MR	Header	Above MR	Below MR	Header	Above MR	Below MR	Header	Above MR	Below MR	Header	Above MR	Below MR	Header	Above MR	Above MR	Header
24	Equal-lite	11.266	1	2	1	1	2	1	1	2	2	1	2	2	1	2	2	1	2	2	1	2	2
28	Standard Cottage	13.517 - 15.516	1	2	1	1	2	1	1	2	2	1	2	2	1	2	2	1	3	2	1	3	2
28	Equal-lite	11.517 - 13.516	1	2	1	1	2	1	1	2	2	2	2	2	2	2	2	2	3	2	2	3	3
28	Standard Proview	11.266 - 11.516	1	2	1	1	2	1	1	2	2	2	2	2	2	2	2	2	2	2	2	2	2
37.375	Tallest	21.517 - 24.891	1	2	1	1	2	1	1	3	2	1	3	2	1	3	2	1	3	2	1	3	2
37.375	Standard Cottage	18.017 - 21.516	2	2	1	2	2	1	2	3	2	2	3	2	2	3	2	2	3	2	2	3	2
37.375	Equal-lite	15.017 - 18.016	2	2	1	2	2	1	2	2	2	2	3	2	2	3	2	2	3	3	2	3	3
37.375	Standard Proview	11.517 - 15.016	3	2	1	3	2	1	3	2	2	3	2	2	3	2	3	3	3	3	3	3	3
37.375	Shortest	11.266 - 11.516	3	2	1	3	2	1	3	2	2	3	2	2	3	2	3	3	2	3	3	2	3
44	Tallest	29.517 - 31.516	1	3	1	1	3	1	1	4	2	1	4	2	1	4	2	1	5	2	1	5	2
44	Custom Size	26.517 - 29.516	2	3	1	2	3	1	2	3	2	2	4	2	2	4	2	2	4	2	2	4	2
44	Standard Cottage	23.517 - 26.516	2	3	1	2	3	1	2	3	2	2	3	2	2	4	2	2	4	2	2	4	2
44	Equal-lite	20.517 - 23.516	2	2	1	2	2	1	2	3	2	2	3	2	2	3	2	2	3	3	2	3	3
44	Custom Size	18.016 - 20.516	3	2	1	3	2	1	3	3	2	3	3	2	3	3	3	3	3	3	3	3	3
44	Standard Proview	11.517 - 18.015	3	2	1	3	2	1	3	2	2	3	3	2	3	3	3	3	3	3	3	3	3
44	Shortest	11.266 - 11.516	3	2	1	3	2	1	3	2	2	3	2	2	3	2	3	3	2	3	3	2	3
48	Tallest	27.517 - 35.141	2	3	1	2	3	1	2	3	2	2	4	2	2	4	2	2	5	2	2	4	2
48	Standard Cottage	23.517 - 27.516	2	3	1	2	3	1	2	3	2	2	4	2	2	4	3	2	4	3	2	4	3
48	Equal-lite	20.517 - 23.516	3	2	1	3	2	1	3	3	2	3	3	2	3	3	3	3	3	3	3	3	3
48	Standard Proview	18.016 - 20.516	3	2	1	3	2	1	3	3	2	3	3	2	3	3	3	3	3	3	3	3	3
48	Custom Size	14.517 - 18.015	3	2	1	3	2	1	3	2	2	3	3	2	3	3	3	3	3	3	3	3	3
48	Custom Size	11.517 - 14.516	3	2	1	3	2	1	3	2	2	3	2	2	3	2	2	3	2	3	3	2	3
48	Shortest	11.266 - 11.516	3	2	1	3	2	1	3	2	2	3	2	2	3	2	2	3	2	3	3	2	3
49.625	Tallest	30.517 - 36.766	2	3	1	2	3	1	2	3	2	2	4	2	2	4	2	2	5	2	2	5	2
49.625	Standard Cottage	27.517 - 30.516	2	3	1	2	3	1	2	4	2	2	4	2	2	4	2	2	4	2	2	4	2
49.625	Custom Size	24.517 - 27.516	3	3	1	3	3	1	3	3	2	3	4	2	3	4	3	3	4	3	3	4	3
49.625	Equal-lite	21.517 - 24.516	3	2	1	3	2	1	3	3	2	3	3	2	3	4	3	3	3	3	3	3	3
49.625	Standard Proview	18.016 - 21.516	3	2	1	3	2	1	3	3	2	3	3	2	3	3	3	3	3	3	3	3	3
49.625	Custom Size	14.517 - 18.015	3	2	1	3	2	1	3	2	2	3	2	2	3	3	3	3	3	3	3	3	3
49.625	Custom Size	11.517 - 14.516	3	2	1	3	2	1	3	2	2	3	2	2	3	2	2	3	2	3	3	2	3
49.625	Shortest	11.266 - 11.516	3	2	1	3	2	1	3	2	2	3	2	2	3	2	2	3	2	3	3	2	3
62	Tallest	36.517 - 36.767	3	3	1	3	3	1	3	3	2	3	4	2	3	4	2	3	4	2	3	4	2
62	Standard Cottage	34.517 - 36.516	3	3	1	3	3	1	3	3	2	3	4	2	3	4	2	3	4	2	3	4	2
62	Custom Size	31.517 - 34.516	3	3	1	3	3	1	3	3	2	3	4	2	3	4	2	3	4	3	3	4	3
62	Equal-lite	28.517 - 31.516	3	3	1	3	3	1	3	4	2	3	4	2	3	4	3	3	4	3	3	4	3
62	Custom Size	25.517 - 28.516	3	3	1	3	3	1	3	3	2	3	3	2	3	3	2	3	3	3	3	3	3
62	Standard Proview	22.517 - 25.516	3	3	1	3	3	1	3	3	2	3	3	2	3	3	2	3	3	3	3	3	3
62	Custom Size	20.017 - 22.516	4	2	1	4	2	1	4	2	2	4	2	2	4	2	2	4	3	3	4	3	3
62	Custom Size	18.016 - 20.016	4	2	1	4	2	1	4	2	2	4	2	2	4	2	2	4	2	2	4	2	3
62	Shortest	16.928 - 18.015	4	2	1	4	2	1	4	2	2	4	2	2	4	2	2	4	2	2	4	2	3
76	Tallest	38.517 - 41.266	3	4	1	3	4	1	3	4	2	3	4	2	3	4	2	3	4	2	3	4	3
76	Equal-lite	36.517 - 38.516	3	3	1	3	3	1	3	3	2	3	3	2	3	4	2	3	4	3	3	4	3
76	Custom Size	34.517 - 36.516	4	3	1	4	3	1	4	3	2	4	3	2	4	4	2	4	4	3	4	4	3
76	Custom Size	31.517 - 34.516	4	3	1	4	3	1	4	3	2	4	3	2	4	3	2	4	3	2	4	4	3
76	Standard Proview	29.928 - 31.516	4	3	1	4	3	1	4	3	2	4	3	2	4	3	2	4	3	2	4	3	3
84	Equal-lite	40.017 - 41.266	4	4	1	4	4	1	4	4	2	4	4	2	4	4	2	4	4	2	4	4	3
84	Custom Size	38.928 - 40.016	4	4	1	4	4	1	4	4	2	4	4	2	4	4	2	4	4	2	4	4	3
86.338	Custom Size	41.266	4	4	1	4	4	1	4	4	2	4	4	2	4	4	2	4	4	2	4	4	3

Anchor Group D

Window Buck Height (in)	Bottom Sash Description for given Range	Bottom Sash Height Range (in)	18" Wide			24" Wide			32" Wide			36" Wide			40" Wide			48" Wide			52-1/8" Wide		
			Jamb			Jamb			Jamb			Jamb			Jamb			Jamb			Jamb		
			Above MR	Below MR	Header	Above MR	Below MR	Header	Above MR	Below MR	Header	Above MR	Below MR	Header	Above MR	Below MR	Header	Above MR	Below MR	Header	Above MR	Above MR	Header
24	Equal-lite	11.266	1	2	1	1	2	1	1	2	2	1	2	2	1	2	2	1	2	2	1	2	2
28	Standard Cottage	13.517 - 15.516	1	2	1	1	2	1	1	2	2	1	2	2	1	2	2	1	2	2	1	2	2
28	Equal-lite	11.517 - 13.516	1	2	1	1	2	1	1	2	2	1	2	2	1	2	2	1	2	2	1	2	2
28	Standard Proview	11.266 - 11.516	1	2	1	1	2	1	1	2	2	1	2	2	1	2	2	1	2	2	1	2	2
37.375	Tallest	21.517 - 24.891	1	2	1	1	2	1	1	2	2	1	2	2	1	2	2	1	3	2	1	3	2
37.375	Standard Cottage	18.017 - 21.516	2	2	1	2	2	1	2	2	2	2	2	2	2	2	2	2	3	2	2	3	2
37.375	Equal-lite	15.017 - 18.016	2	2	1	2	2	1	2	2	2	2	2	2	2	2	2	2	2	2	2	2	2
37.375	Standard Proview	11.517 - 15.016	3	2	1	3	2	1	3	2	2	3	2	2	3	2	2	3	2	2	3	2	2
37.375	Shortest	11.266 - 11.516	3	2	1	3	2	1	3	2	2	3	2	2	3	2	2	3	2	2	3	2	2
44	Tallest	29.517 - 31.516	1	3	1	1	3	1	1	3	2	1	3	2	1	3	2	1	3	2	1	3	2
44	Custom Size	26.517 - 29.516	2	3	1	2	3	1	2	3	2	2	3	2	2	3	2	2	3	2	2	3	2
44	Standard Cottage	23.517 - 26.516	2	3	1	2	3	1	2	3	2	2	3	2	2	3	2	2	3	2	2	3	2
44	Equal-lite	20.517 - 23.516	2	2	1	2	2	1	2	2	2	2	2	2	2	3	2	2	3	2	2	3	2
44	Custom Size	18.016 - 20.516	3	2	1	3	2	1	3	2	2	3	2	2	3	2	2	3	2	2	3	2	2
44	Standard Proview	11.517 - 18.015	3	2	1	3	2	1	3	2	2	3	2	2	3	2	2	3	2	2	3	2	2
44	Shortest	11.266 - 11.516	3	2	1	3	2	1	3	2	2	3	2	2	3	2	2	3	2	3	3	2	3
48	Tallest	27.517 - 35.141	2	3	1	2	3	1	2	3	2	2	3	2	2	3	2	2	3	2	2	3	2
48	Standard Cottage	23.517 - 27.516	2	3	1	2	3	1	2	3	2	2	3	2	2	3	2	2	3	2	2	3	2
48	Equal-lite	20.517 - 23.516	3	2	1	3	2	1	3	2	2	3	2	2	3	3	2	3	2	2	3	2	2
48	Standard Proview	18.016 - 20.516	3	2	1	3	2	1	3	2	2	3	2	2	3	2	2	3	2	2	3	2	2
48	Custom Size	14.517 - 18.015	3	2	1	3	2	1	3	2	2	3	2	2	3	2	2	3	2	2	3	2	2
48	Custom Size	11.517 - 14.516	3	2	1	3	2	1	3	2	2	3	2	2	3	2	2	3	2	2	3	2	2
48	Shortest	11.266 - 11.516	3	2	1	3	2	1	3	2	2	3	2	2	3	2	2	3	2	2	3	2	3
49.625	Tallest	30.517 - 36.766	2	3	1	2	3	1	2	3	2	2	3	2	2	3	2	2	3	2	2	3	2
49.625	Standard Cottage	27.517 - 30.516	2	3	1	2	3	1	2	3	2	2	3	2	2	3	2	2	3	2	2	3	2
49.625	Custom Size	24.517 - 27.516	3	3	1	3	3	1	3	3	2	3	3	2	3	3	2	3	3	2	3	3	2
49.625	Equal-lite	21.517 - 24.516	3	2	1	3	2	1	3	2	2	3	2	2	3	3	2	3	3	2	3	2	2
49.625	Standard Proview	18.016 - 21.516	3	2	1	3	2	1	3	2	2	3	2	2	3	2	2	3	2	2	3	2	2
49.625	Custom Size	14.517 - 18.015	3	2	1	3	2	1	3	2	2	3	2	2	3	2	2	3	2	2	3	2	2
49.625	Custom Size	11.517 - 14.516	3	2	1	3	2	1	3	2	2	3	2	2	3	2	2	3	2	2	3	2	2
49.625	Shortest	11.266 - 11.516	3	2	1	3	2	1	3	2	2	3	2	2	3	2	2	3	2	2	3	2	2
62	Tallest	36.517 - 36.767	3	3	1	3	3	1	3	3	2	3	3	2	3	3	2	3	3	2	3	3	2
62	Standard Cottage	34.517 - 36.516	3	3	1	3	3	1	3	3	2	3	3	2	3	3	2	3	3	2	3	3	2
62	Custom Size	31.517 - 34.516	3	3	1	3	3	1	3	3	2	3	3	2	3	3	2	3	3	2	3	3	2
62	Equal-lite	28.517 - 31.516	3	3	1	3	3	1	3	3	2	3	3	2	3	3	2	3	3	2	3	3	2
62	Custom Size	25.517 - 28.516	3	3	1	3	3	1	3	3	2	3	3	2	3	3	2	3	3	2	3	3	2
62	Standard Proview	22.517 - 25.516	3	3	1	3	3	1	3	3	2	3	3	2	3	3	2	3	3	2	3	3	2
62	Custom Size	20.017 - 22.516	4	2	1	4	2	1	4	2	2	4	2	2	4	2	2	4	2	2	4	2	2
62	Custom Size	18.016 - 20.016	4	2	1	4	2	1	4	2	2	4	2	2	4	2	2	4	2	2	4	2	2
62	Shortest	16.928 - 18.015	4	2	1	4	2	1	4	2	2	4	2	2	4	2	2	4	2	2	4	2	2
76	Tallest	38.517 - 41.266	3	4	1	3	4	1	3	4	2	3	4	2	3	4	2	3	4	2	3	4	2
76	Equal-lite	36.517 - 38.516	3	3	1	3	3	1	3	3	2	3	3	2	3	3	2	3	3	2	3	3	2
76	Custom Size	34.517 - 36.516	4	3	1	4	3	1	4	3	2	4	3	2	4	3	2	4	3	2	4	3	2
76	Custom Size	31.517 - 34.516	4	3	1	4	3	1	4	3	2	4	3	2	4	3	2	4	3	2	4	3	2
76	Standard Proview	29.928 - 31.516	4	3	1	4	3	1	4	3	2	4	3	2	4	3	2	4	3	2	4	3	2
84	Equal-lite	40.017 - 41.266	4	4	1	4	4	1	4	4	2	4	4	2	4	4	2	4	4	2	4	4	2
84	Custom Size	38.928 - 40.016	4	4	1	4	4	1	4	4	2	4	4	2	4	4	2	4	4	2	4	4	2
86.338	Custom Size	41.266	4	4	1	4	4	1	4	4	2	4	4	2	4	4	2	4	4	2	4	4	2

SEE TABLE 5, SHEET 7 FOR DESIGN PRESSURES WHEN USING THIS TABLE.

Max. Anchor O.C. Spacing for "Integral-Fin" Installation	Anchor Group F
	3.6"

NOTES:

1) USE THE ABOVE *"ANCHOR QUANTITIES REQUIRED.........."* TABLE FOR ANCHORS INSTALLED THROUGH THE FRAME.

2) USE THE ABOVE *"MAX. ANCHOR O.C. SPACING.........."* TABLE FOR ANCHORS INSTALLED THROUGH THE INTEGRAL FIN.

3) FRAME DIMENSIONS ARE BUCK. "MR"=MEETING RAIL.

4) FOR SIZES NOT SHOWN, ROUND UP TO THE NEXT AVAILABLE WIDTH OR HEIGHT DIMENSION SHOWN ON THE TABLE.

5) REFER TO TABLES 2 & 3, SHEET 2 FOR ANCHOR GROUP DESCRIPTIONS.

ANTHONY LYNN MILLER LICENSE No. 58705 STATE OF FLORIDA PROFESSIONAL ENGINEER 7/30/15

A. LYNN MILLER, P.E.
P.E.# 58705

PGT®
1070 TECHNOLOGY DRIVE
N. VENICE, FL 34275
(941)-480-1600
CERT. OF AUTH. #29296

Approved as complying with the Florida Building Code
Date Sept. 17, 2015
NOA# 15-0812.03
Miami Dade Product Control
By Manuel Perez

Revised By:	Date:	Revision:
Revised By:	Date:	Revision:

Description: ANCHOR QUANTITY TABLE	Drawn By: J ROSOWSKI
Title: DOUBLE HUNG WINDOW INSTALLATION - NI	Date: 05/15/15

Series/Model:	Scale:	Sheet:	Drawing No.	Rev:
DH-5460	NTS	9 OF 12	MD-DH5460-01	

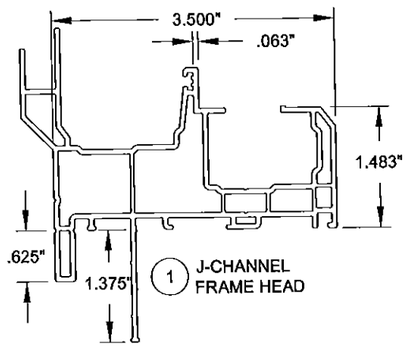

1 J-CHANNEL FRAME HEAD

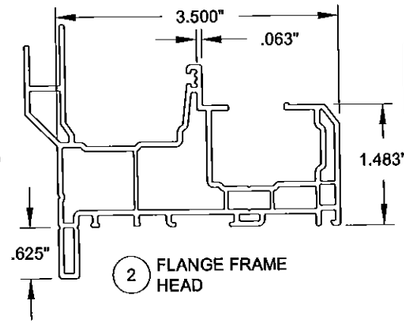

2 FLANGE FRAME HEAD

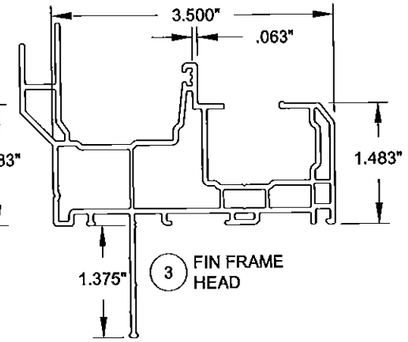

3 FIN FRAME HEAD

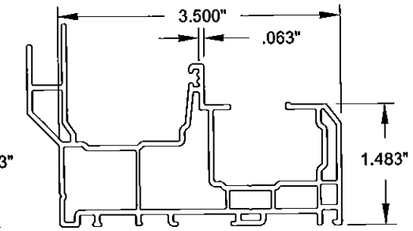

4 EQUAL LEG FRAME HEAD

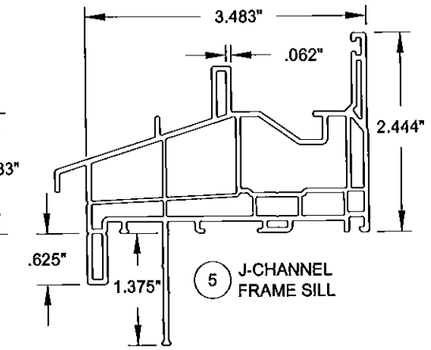

5 J-CHANNEL FRAME SILL

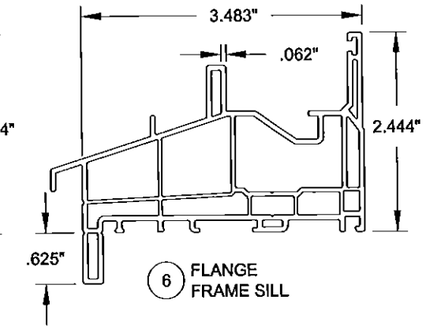

6 FLANGE FRAME SILL

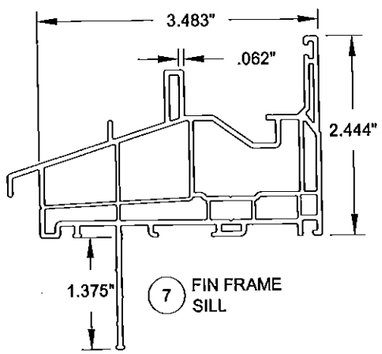

7 FIN FRAME SILL

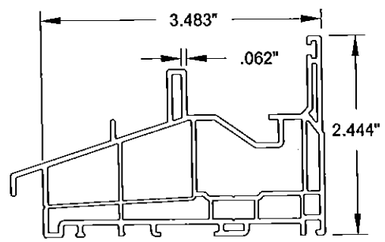

8 EQUAL LEG FRAME SILL

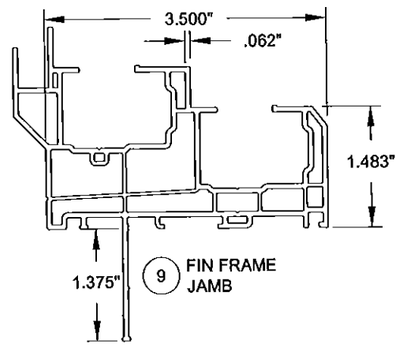

9 FIN FRAME JAMB

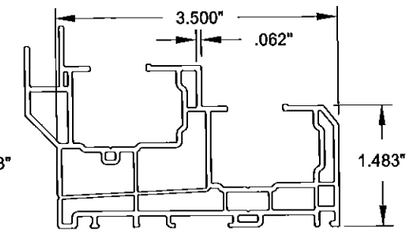

10 EQUAL LEG FRAME JAMB

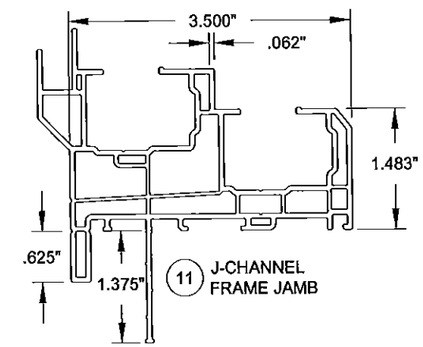

11 J-CHANNEL FRAME JAMB

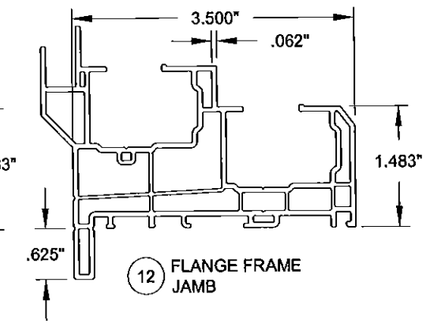

12 FLANGE FRAME JAMB

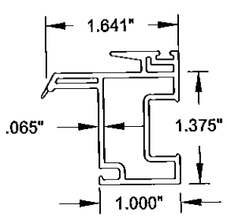

15 DH SASH KEEPER RAIL

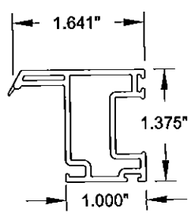

16 SASH RAIL

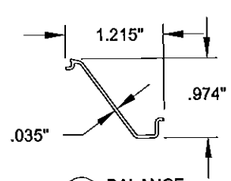

17 BALANCE COVER

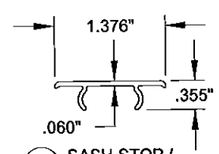

18 SASH STOP / SCREW COVER

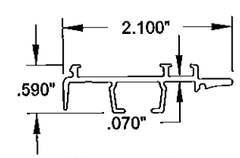

19 LIFT RAIL INTERLOCK

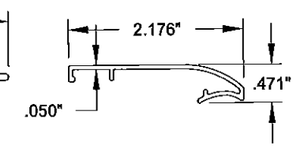

20 LIFT RAIL INTERLOCK COVER

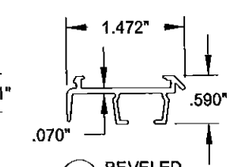

21 BEVELED INTERLOCK

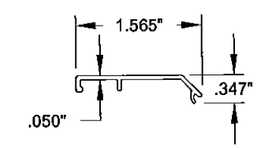

22 BEVELED INTERLOCK COVER

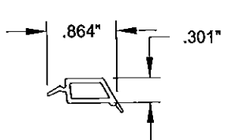

73 IG BEAD

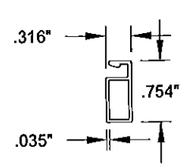

81 EXTRUDED SCREEN FRAME

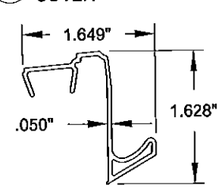

14 TOP SASH PULL

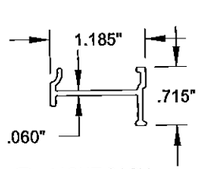

23 LIGHT SASH REINFORCEMENT

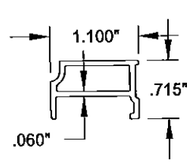

24 STANDARD SASH REINFORCEMENT

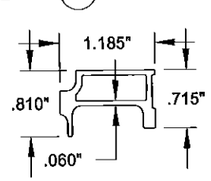

25 HD SASH REINFORCEMENT

ANTHONY LYNN MILLER
LICENSE
No. 58705
7/30/15
STATE OF FLORIDA
PROFESSIONAL ENGINEER

A. LYNN MILLER, P.E.
P.E.# 58705

PGT®

1070 TECHNOLOGY DRIVE
N. VENICE, FL 34275
(941)-480-1600

CERT. OF AUTH. #29296

Approved as complying with the Florida Building Code
Date Sept. 17, 2015
NOA# 15-0812.03
Miami Dade Product Control
By Manuel Perez

Revised By:	Date:	Revision:
Revised By:	Date:	Revision:

Description:	Drawn By:
WINDOW EXTRUSIONS	J ROSOWSKI

Title:	Date:
DOUBLE HUNG WINDOW INSTALLATION - NI	05/15/15

Series/Model:	Scale:	Sheet:	Drawing No.	Rev:
DH-5460	NTS	10 OF 12	MD-DH5460-01	

TABLE 8:

Bill of Material			
#	Part #	Description	Material
1	620113	Frame Head - J-Channel	PVC
2	620114	Frame Head - Flange	PVC
3	620115	Frame Head - Fin	PVC
4	620116	Frame Head - Equal Leg/Box	PVC
5	620105	Frame Sill - J-Channel	PVC
6	620106	Frame Sill - Flange	PVC
7	620107	Frame Sill - Fin	PVC
8	620108	Frame Sill - Equal Leg/Box	PVC
9	620109	Frame Jamb - J-Channel	PVC
10	620110	Frame Jamb - Flange	PVC
11	620111	Frame Jamb - Fin	PVC
12	620112	Frame Jamb - Equal Leg/Box	PVC
14	620171	Top Sash Pull (opt.)	PVC
15	620140	Keeper Rail	PVC
16	620129	Sash Rail (Sides, Top & Bottom)	PVC
17	620134	Balance Cover	PVC
18	620133	Sash Stop/Screw Cover	PVC
19	620156	Lift Rail Interlock	6005 T5 Al
20	620144	Lift Rail Interlock Cover	PVC
21	620157	Beveled Interlock	6005 T5 Al
22	620145	Beveled Interlock Cover	PVC
23	620150	Light Sash Reinforcement	6063 T6 Al
24	620151	Standard Sash Reinforcement	6063 T6 Al
25	620152	HD Sash Reinforcement	6063 T6 Al
30	61644	Weatherstrip, .187" x .270" Fin Pile	
31	6Q300	Weatherstrip, .190" x .300" Foam Bulb	
32	61719	Weatherstrip, .187" x .220" PolyPile	
33	61825	Weatherstrip Plug, .220" Finseal	
35	78X1MTTT	#8 x 1" Ph. PH SDS (Interlock Mounting Screw)	SS
38	720210	Weep Hole Cover	PVC
39	720185	Tilt Latch Reinforcement Clip	PVC
40	720XXXXX	Constant Force Balance	
41	78X34PPAX	#8 x 3/4" Ph. FH SMS (Con. Force Balance Screw)	SS
42		Spiral Balance	
43	720205	Spiral Balance Shoe	Nylon
44	78X114FPAX	#8 x 1-1/4" Ph. FH SMS (Spiral Balance Screw)	SS

NOTES:
1) GLASS AND SOME PARTS/OPTIONS NOT SHOWN ON DRAWING FOR CLARITY.
2) J-CHANNEL FRAME SHOWN, PARTS # 1, 5 & 9. OTHER FRAME TYPES APPLY.
3) PVC BY ROYAL WINDOW AND DOOR PROFILES, LTD., TO BE LABELED FOR AAMA EXTRUDER CODE.
4) FOR REINFORCEMENT TYPES, SEE DETAILS ON SHEETS 6 & 7.
5) ITEMS # 13, 26-29, 34, 36, 37, 65-72, 79 & 84 ARE NOT USED AND ARE NOT PART OF THIS APPROVAL.

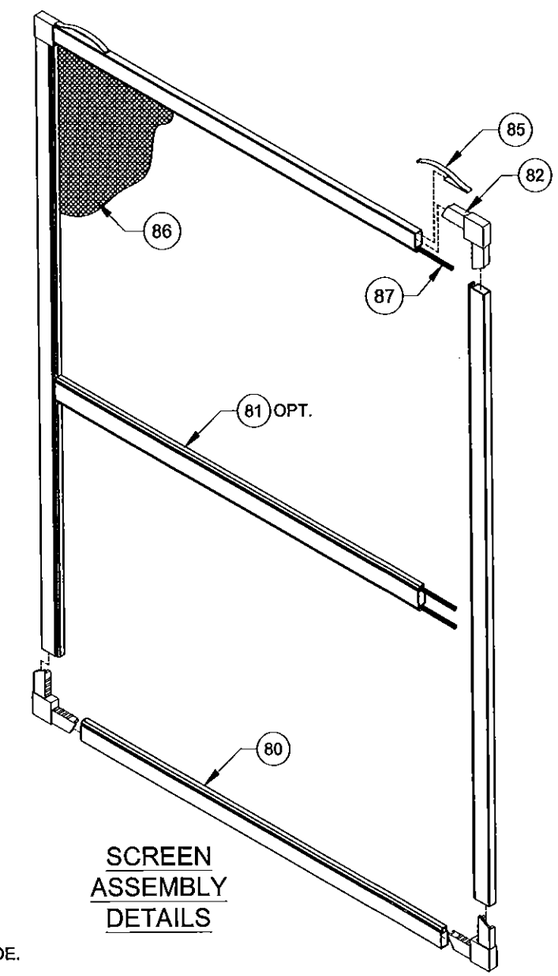

SCREEN ASSEMBLY DETAILS

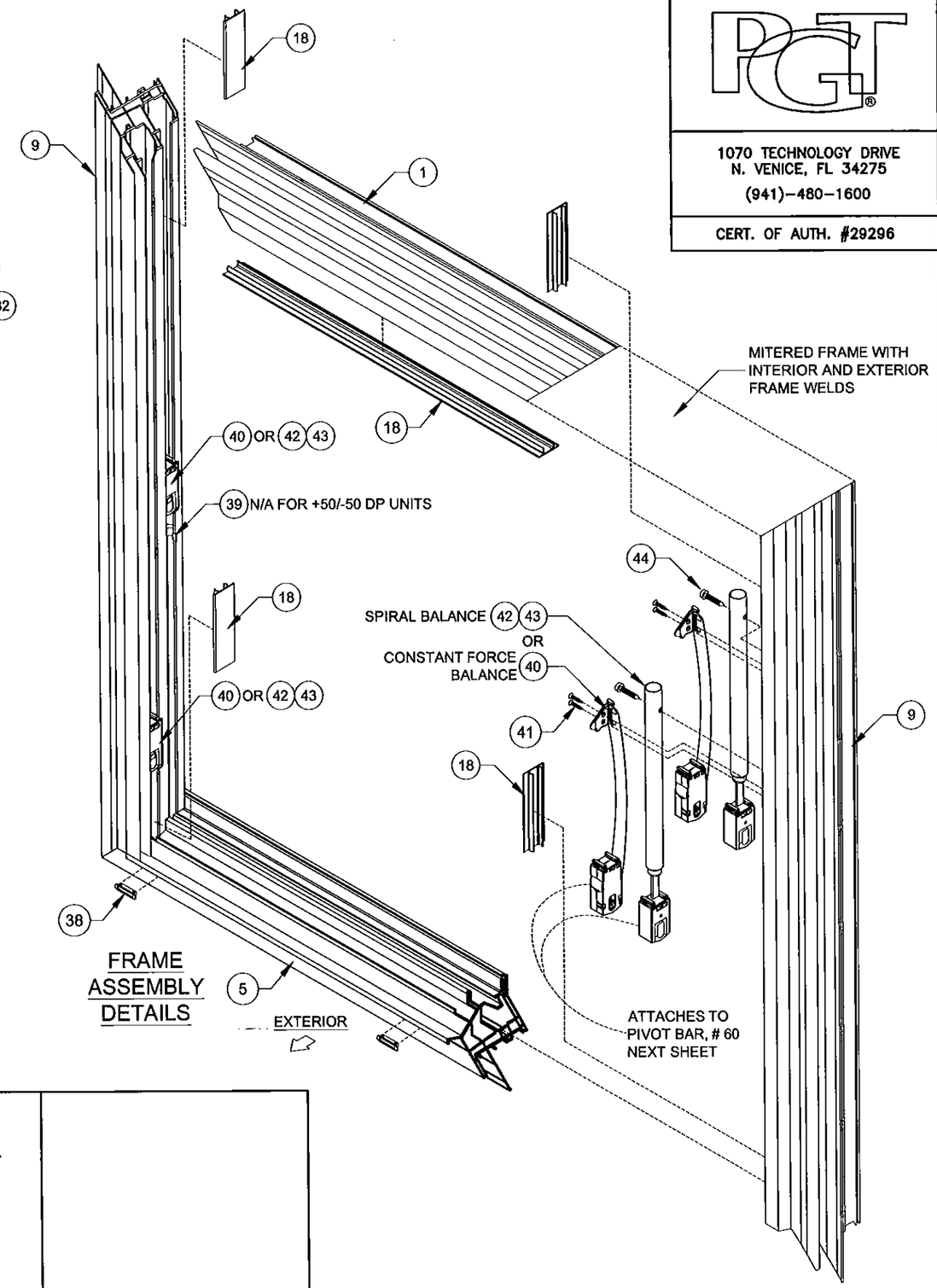

FRAME ASSEMBLY DETAILS

PGT®
1070 TECHNOLOGY DRIVE
N. VENICE, FL 34275
(941)-480-1600
CERT. OF AUTH. #29296

Revised By:	Date:	Revision:
Revised By:	Date:	Revision:

Description: BILL OF MATERIAL A (BOM)
Drawn By: J ROSOWSKI
Title: DOUBLE HUNG WINDOW INSTALLATION - LM
Date: 05/15/15
Series/Model: DH-5460
Scale: NTS
Sheet: 11 OF 12
Drawing No. MD-DH5460-01
Rev:

ANTHONY LYNN MILLER LICENSE No. 58705 STATE OF FLORIDA PROFESSIONAL ENGINEER
7/30/15
A. LYNN MILLER, P.E.
P.E.# 58705

Approved as complying with the Florida Building Code
Date Sept. 17, 2015
NOA# 15-0812.03
Miami Dade Product Control
by Manuel Perez

TABLE 8, CONT.:

#	Part #	Bill of Material, cont. Description	Material
45	720197	Auto Lock Mechanism	C Steel
46	720198&9	Sweep Lock	Cast Zinc
47	720195&6	Auto Lock Cover Assembly	Cast Zinc
48	76X1180PTX	#6 x 1-1/8" Ph. FH SDS (Auto/Sweep Lock Screw)	SS
49	720200	Auto and Sweep Lock Keeper	Cast Zinc
50	76X34PPTX	#6 x 3/4" PH. PH SDS (Keeper Screw)	SS
51	420181 L/R	Beveled Tilt Latch Corner Key	PVC
52	420182 L/R	Pull Rail Tilt Latch Corner Key	PVC
53	7634PHFL	#6 x 3/4" Ph. FH SDS (Pivit Bar & tilt Latch Screw)	SS
54	420183	Tilt Latch	PVC
55	420184	Tilt Latch Retainer	PVC
56	720207	1" Tilt Latch Spring	SS
57	420186	Plastic Tilt Latch Finger Pull	PVC
58	720192	Metal Tilt Latch Finger Pull	Cast Zinc
59	420180	Pivot Bar Corner Key (Top & Bottom Sash)	PVC
60	720206	Pivot Bar (Top & Bottom Sash)	SS
61	7101/7102	Top Sash Tilt Latch (L&R)	PVC
62	76X12FPTX	#6 x 1/2" Ph. FH SDS (Top Sash Tilt Latch Screw)	SS
63	720191	Sash Pull Handle (opt.)	Cast Zinc
64	78X34FPT	#8 x 3/4" Ph. FH SDS (Pull Handle Screw)	SS
73	720136	I.G. Bead	PVC
74		Backbedding, GE 7700 or Dow 791	Silicone
75	71684&5	Setting Block (7/8" x 2" x 1/8"), 85 +/- 5 duro.	EPDM
76		Quanex SuperSpacer nXT with Hot Melt Butyl	Composite
77		Quanex Duraseal Spacer	Composite
78		Cardinal XL Edge Spacer	Composite
80	61012	Extruded Screen Frame	Alum
81	60775	Extruded Screen Spreader Bar	Alum
82	7CKGLB21	Screen Corner Key for Extruded Frame	PVC
83	72045	Extruded Screen Spreader Bar Clip	Alum
85	7CASPM	Tension Spring	SS
86	61816C48	Screen Cloth	Fiberglass
87	61635/61624	.140" Screen Spline (Machine/Hand Rolled)	Vinyl

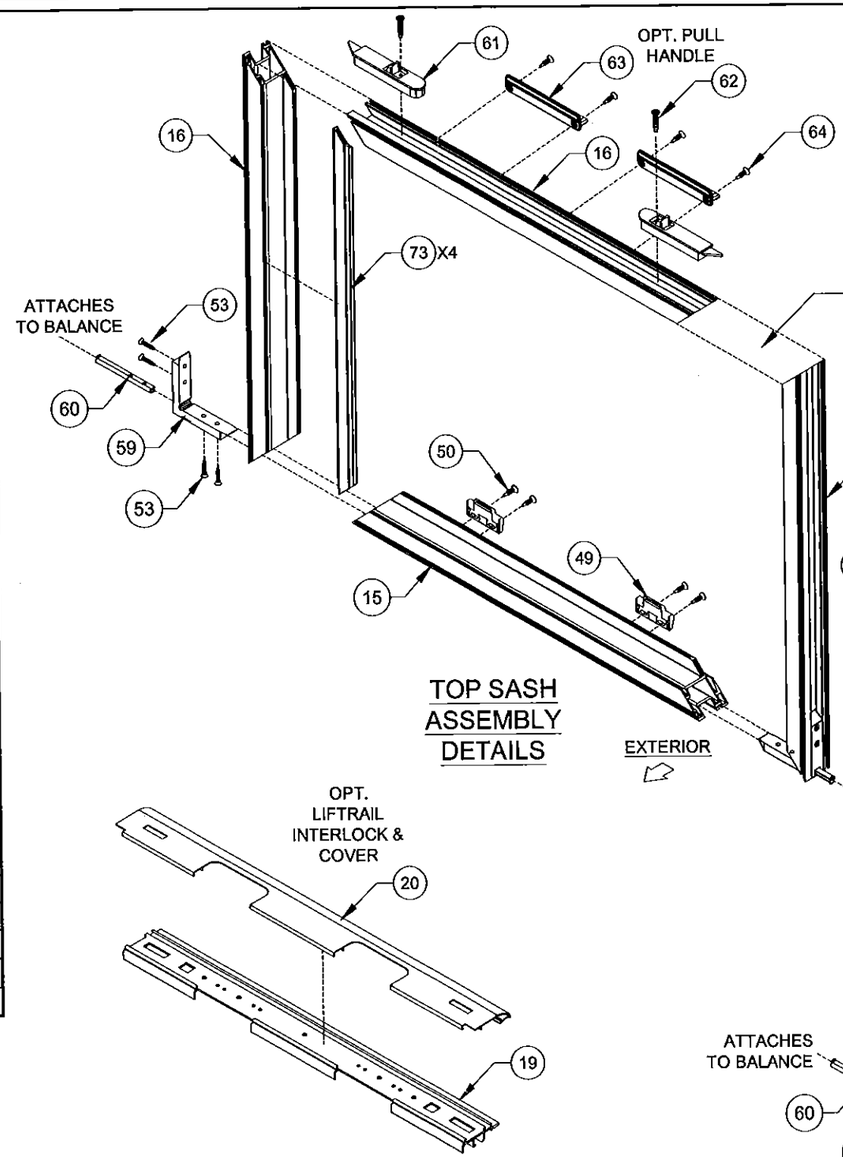

TOP SASH ASSEMBLY DETAILS

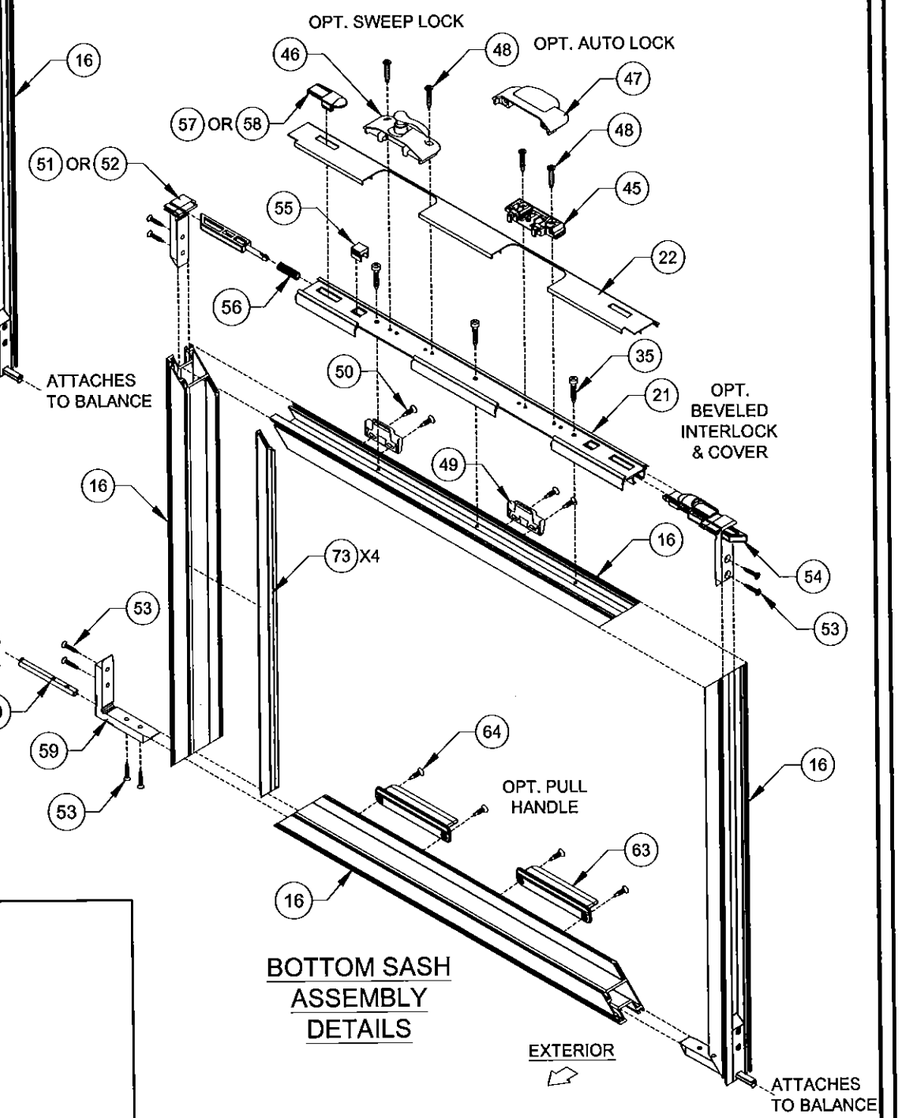

BOTTOM SASH ASSEMBLY DETAILS

PGT®

1070 TECHNOLOGY DRIVE
N. VENICE, FL 34275
(941)-480-1600

CERT. OF AUTH. #29296

Revised By:	Date:	Revision:
Revised By:	Date:	Revision:

Description: BILL OF MATERIAL B (BOM)

Drawn By: J ROSOWSKI

Title: DOUBLE HUNG WINDOW INSTALLATION - LM

Date: 05/15/15

Series/Model:	Scale:	Sheet:	Drawing No.	Rev:
DH-5460	NTS	12 OF 12	MD-DH5460-01	

ANTHONY LYNN MILLER
LICENSE
No. 58705
7/30/15
STATE OF FLORIDA
PROFESSIONAL ENGINEER
A. LYNN MILLER, P.E.
P.E.# 58705

Approved as complying with the Florida Building Code
Date Sep. 17, 2015
NOA# 15-0812.03
Miami Dade Product Control
By Manuel Cerz