MIAMI-DADE COUNTY
DEPARTMENT OF REGULATORY AND ECONOMIC RESOURCES (RER)
BOARD AND CODE ADMINISTRATION DIVISION

MIAMI-DADE COUNTY
PRODUCT CONTROL SECTION
11805 SW 26 Street, Room 208
T (786) 315-2590 F (786) 315-2599
www.miamidade.gov/economy

NOTICE OF ACCEPTANCE (NOA)

AWP Windows and Doors, LLC
8130 NW 74th Avenue
Medley, FL 33166

SCOPE:

This NOA is being issued under the applicable rules and regulations governing the use of construction materials. The documentation submitted has been reviewed and accepted by Miami-Dade County RER–Product Control Section to be used in Miami-Dade County and other areas where allowed by the Authority Having Jurisdiction (AHJ).

This NOA shall not be valid after the expiration date stated below. The Miami-Dade County Product Control Section (In Miami-Dade County) and/ or the AHJ (in areas other than Miami-Dade County) reserve the right to have this product or material tested for quality assurance purposes. If this product or material fails to perform in the accepted manner, the manufacturer will incur the expense of such testing and the AHJ may immediately revoke, modify, or suspend the use of such product or material within their jurisdiction. RER reserves the right to revoke this acceptance, if it is determined by Miami-Dade County Product Control Section that this product or material fails to meet the requirements of the applicable building code.

This product is approved as described herein, and has been designed to comply with the Florida Building Code, including the High Velocity Hurricane Zone.

DESCRIPTION: Clipped, Extruded Aluminum Tube Mullion – L.M.I.

APPROVAL DOCUMENT: Drawing No. **M95-06A**, titled "Aluminum Tube Mullions", sheets 1 through 6 of 6, dated 11/20/95, with revision **G** dated 08/28/15, prepared by Al-Farooq Corporation, signed and sealed by Javad Ahmad, P.E., bearing the Miami-Dade County Product Control Revision stamp with the Notice of Acceptance number and expiration date by the Miami-Dade County Product Control Section.

MISSILE IMPACT RATING: Large and Small Missile Impact Resistant.

LABELING: Each unit shall bear a permanent label with the manufacturer's name or logo, city, state, series, and following statement: "Miami-Dade County Product Control Approved", unless otherwise noted herein.

RENEWAL of this NOA shall be considered after a renewal application has been filed and there has been no change in the applicable building code negatively affecting the performance of this product.

TERMINATION of this NOA will occur after the expiration date or if there has been a revision or change in the materials, use, and/ or manufacture of the product or process. Misuse of this NOA as an endorsement of any product, for sales, advertising or any other purposes shall automatically terminate this NOA. Failure to comply with any section of this NOA shall be cause for termination and removal of NOA.

ADVERTISEMENT: The NOA number preceded by the words Miami-Dade County, Florida, and followed by the expiration date may be displayed in advertising literature. If any portion of the NOA is displayed, then it shall be done in its entirety.

INSPECTION: A copy of this entire NOA shall be provided to the user by the manufacturer or its distributors and shall be available for inspection at the job site at the request of the Building Official.

This NOA **revises and renews NOA No. 11-1213.07** and consists of this page 1 and evidence pages E–1 and E–2, as well as approval document mentioned above.

The submitted documentation was reviewed by **Manuel Perez, P.E.**

MIAMI-DADE COUNTY APPROVED

2/19/16

AWP Windows and Doors, LLC

NOTICE OF ACCEPTANCE: EVIDENCE SUBMITTED

A. DRAWINGS

1. Manufacturer's die drawings and sections.
   (Submitted under NOA's No. 11-1213.07, 02-0227.01 and 95-0515.09)
2. Drawing No. **M95-06A**, titled "Aluminum Tube Mullions", sheets 1 through 6 of 6, dated 11/20/95, with revision **G**, dated 08/28/15, prepared by Al-Farooq Corporation, signed and sealed by Javad Ahmad, P.E.

B. TESTS

1. Test reports on: 1) Large Missile Impact Test per FBC, TAS 201-94
   2) Cyclic Wind Pressure Loading per FBC, TAS 203-94
   along with marked-up drawings and installation diagram of 2 mulled fixed frame windows, O-O configuration, prepared by Fenestration Testing Laboratory, Inc., Test Report No. **FTL-6600**, dated 08/30/11, signed and sealed by Marlin D. Brinson, P.E.
   (Submitted under previous NOA No. 11-1213.07)
2. Test reports on: 1) Large Missile Impact Test per FBC, TAS 201-94
   2) Cyclic Wind Pressure Loading per FBC, TAS 203-94
   along with marked-up drawings and installation diagram of 3 mulled fixed frame windows, O-O/O configuration, prepared by Fenestration Testing Laboratory, Inc., Test Report No. **FTL-3284**, dated 02/01/02, signed and sealed by Luis Antonio Figueredo, P.E.
   (Submitted under NOA No. 02-0227.01)
3. Test reports on: 1) Uniform Static Air Pressure Test, Loading per FBC, TAS 202-94
   along with marked-up drawings and installation diagram of a window, prepared by Fenestration Testing Laboratory, Inc., Test Report No. **FTL-1297**, dated 09/21/95, signed and sealed by Yamil Gerardo Kuri, P.E.
   (Submitted under NOA No. 95-0515.09)

C. CALCULATIONS:

1. Anchor verification calculations and structural analysis, complying with **FBC 5th Edition (2014)**, prepared by Al-Farooq Corporation, dated 10/08/15, signed and sealed by Javad Ahmad, P.E.

D. QUALITY ASSURANCE

1. Miami-Dade Department of Regulatory and Economic Resources (RER)

E. MATERIAL CERTIFICATIONS

1. None.

Manuel Perez, P.E.
Product Control Examiner
NOA No. 15-0818.06
Expiration Date: December 24, 2021
Approval Date: February 25, 2016

NOTICE OF ACCEPTANCE: EVIDENCE SUBMITTED

F. STATEMENTS

1. Statement letter of conformance, complying with **FBC 5th Edition (2014)**, and of no financial interest, dated October 2, 2015, issued by Al-Farooq Corporation, signed and sealed by Javad Ahmad, P.E.
2. Asset purchase agreement dated 03/20/14, signed by Mr. Paul Schmitz, Chief Executive Officer and President, Trulite Intermediate Holding, LLC and Mr. Tim Morris, Jr., President and C.F.O., AWP Windows and Doors, LLC.
3. Letter from owners of existing NOA stating that they have sold all assets to the applicant, that they no longer manufacture the product and relinquish their rights to the current NOA No. 11-1213.07, dated 04/20/15, signed by Mr. Kevin Barrett, Chief Financial Officer, AWP Windows and Doors, LLC.
4. Statement letter for Name Change Request dated 04/20/15, issued by AWP Windows and Doors, LLC, signed by Gerardo Beros, Director of Engineering.
5. Laboratory compliance letters for Test Report No. **FTL-6600**, dated 08/30/11, issued by Fenestration Testing Laboratory, Inc., both signed and sealed by Marlin D. Brinson, P.E.
   (Submitted under previous NOA No. 11-1213.07)
6. Laboratory compliance letters for Test Report No. **FTL-3284**, dated 02/01/02, issued by Fenestration Testing Laboratory, Inc., signed and sealed by Luis Antonio Figueredo, P.E.
   (Submitted under NOA No. 02-0227.01)
7. Laboratory compliance letters for Test Report No. **FTL-1297**, dated 09/21/95, issued by Fenestration Testing Laboratory, Inc., signed and sealed by Yamil Gerardo Kuri, P.E.
   (Submitted under NOA No. 95-0515.09)

G. OTHERS

1. Notice of Acceptance No. **11-1213.07**, issued to Trulite Window & Door Solutions, LLC for their Clipped, Extruded Aluminum Tube Mullion – L.M.I., approved on 02/02/12 and expiring on 12/24/16.

Manuel Perez, P.E.
Product Control Examiner
NOA No. 15-0818.06
Expiration Date: December 24, 2021
Approval Date: February 25, 2016

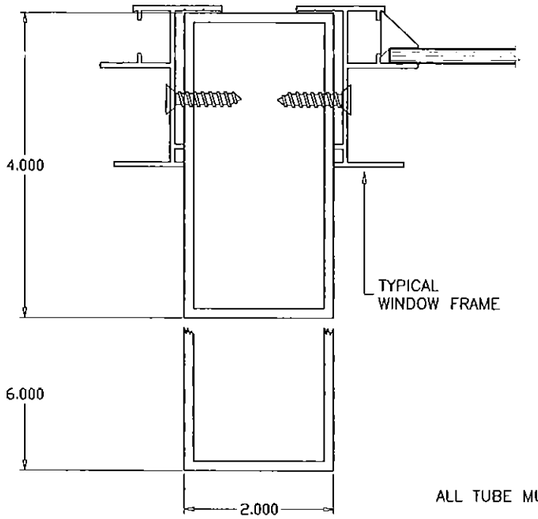

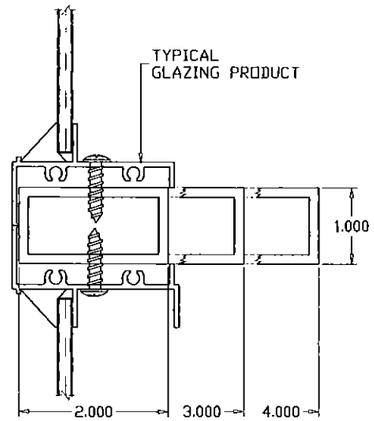

ALL TUBE MULLIONS TO BE ALLOY 6063–T6.

MULLIONS CONTAINING TYPICAL GLAZING PRODUCTS HORIZONTAL OR VERTICAL

SEE WINDOW OR DOOR APPROVAL FOR FASTENERS SIZES AND SPACING

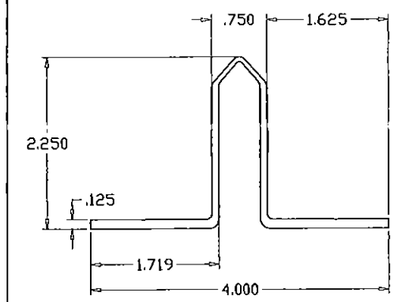

MULLION CLIP (YE–65) (6063–T6)

(ALT. TO ANGLES)

CLIP LENGTHS MUST BE CUT TO FIT SNUG INTO TUBE MULLIONS.

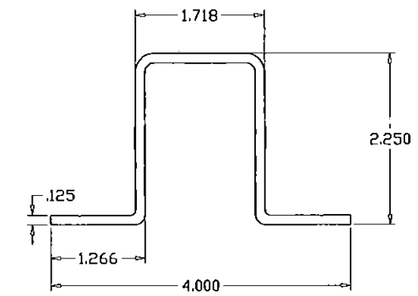

MULLION CLIP (6063–T5)

(ALT. TO ANGLES)

CLIP LENGTHS MUST BE CUT TO FIT SNUG INTO TUBE MULLIONS.

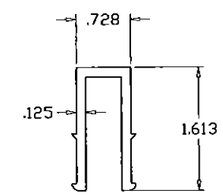

MULLION CLIP (6063–T5)

CLIP LENGTHS MUST BE CUT TO FIT SNUG INTO TUBE MULLIONS.
(NO SIDE FASTENERS REQD.)

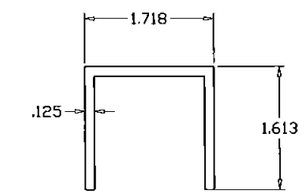

MULLION CLIP (6063–T5)

CLIP LENGTHS MUST BE CUT TO FIT SNUG INTO TUBE MULLIONS.
(NO SIDE FASTENERS REQD.)

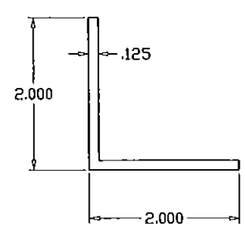

ANGLE CLIP (6063–T5)

RECTANGULAR ALUMINUM TUBE MULLIONS USING MULLION PROPERTIES ONLY

NOTES:

THIS PRODUCT HAS BEEN DESIGNED AND TESTED TO COMPLY WITH THE REQUIREMENTS OF THE FLORIDA BUILDING CODE INCLUDING HIGH VELOCITY HURRICANE ZONE (HVHZ).

ALL GLAZING PRODUCTS USED WITH THESE MULLIONS MUST MEET THE APPLICABLE BUILDING CODE REQUIREMENTS I.E: WIND LOAD, WATER INFILTRATION, FORCED ENTRY RESISTANCE, SAFEGUARDS ETC.

WOOD BUCKS BY OTHERS, MUST BE ANCHORED PROPERLY TO TRANSFER LOADS TO THE STRUCTURE.

ANCHORS SHALL BE AS LISTED, SPACED AS SHOWN ON DETAILS, EMBEDMENT TO BASE MATERIAL SHALL BE BEYOND WALL COVERING (STUCCO, TILE ETC.).

ANCHORING CONDITIONS OTHER THAN THOSE SHOWN IN THESE DETAILS ARE NOT PART OF THIS APPROVAL.

A LOAD DURATION INCREASE IS USED IN DESIGN OF ANCHORS INTO WOOD ONLY.

MATERIALS INCLUDING BUT NOT LIMITED TO STEEL/METAL SCREWS, THAT COME INTO CONTACT WITH OTHER DISSIMILAR MATERIALS SHALL MEET THE REQUIREMENTS OF THE FLORIDA BLDG. CODE.

MANUFACTURER'S LABEL SHALL BE LOCATED ON A READILY VISIBLE LOCATION IN ACCORDANCE WITH CURRENT FLORIDA BUILDING CODE.

MULLION SYSTEM IS RATED FOR LARGE MISSILE IMPACT. AND CAN BE USED WITH ALL MIAMI–DADE COUNTY APPROVED IMPACT AND NON–IMPACT RESISTANT PRODUCTS.

INSTRUCTIONS:

USE CHARTS AND GRAPHS AS FOLLOWS.

STEP 1 DETERMINE DESIGN LOAD REQUIRED PER ASCE 7 FOR PARTICULAR OPENING.

STEP 2 USE APPROVED GLAZING PRODUCTS MEETING ABOVE LOAD REQUIREMENTS.

STEP 3 USE CONNECTION TO MULLION AS PER PRODUCT APPROVAL.

STEP 4 USING CHARTS ON SHEET 2 SELECT MULLION SIZE WITH DESIGN RATING MORE THAN DESIGN LOAD SPECIFIED IN STEP 1 ABOVE.

STEP 5 USING ANCHOR TYPES ON SHEET 4 THRU 6 AND ANCHOR CHARTS ON SHEET 3, SELECT ANCHOR TYPE WITH DESIGN RATING MORE THAN THE DESIGN LOADS SPECIFIED IN STEP 1 ABOVE.

PRODUCT REVISED
as complying with the Florida
Building Code
Acceptance No 15-0818.06
Expiration Date DEC 24 2021
By Manuel Perez
Miami Dade Product Control

Engr: JAVAD AHMAD
CIVIL
FLA. PE # 70592
C.A.N. 3538
OCT 08 2015

AL-FAROOQ CORPORATION
ENGINEERS & PRODUCT DEVELOPMENT
1235 S.W. 87 AVE
MIAMI, FLORIDA 33174
TEL (305) 264-8100 FAX (305) 262-6978

MULLION\M95–06A

ALUMINUM TUBE MULLIONS

AWP WINDOWS AND DOORS, LLC
8130 N.W. 74TH AVE.
MEDLEY, FL. 33166
TEL. (305) 887-2646 FAX (305) 883-1309

revisions:

no	date	by	description
C	07.25.06	H	UPDATED FOR 2004 FBC
D	05.05.09		GENERAL REVISION
E	09.02.10		MANUF. NAME REVISED
F	11.18.11		UPDATED TO 2010 FBC, NAME REV
G	08.28.15		UPDATED TO 2014 FBC

date: 11–20–95
scale: 1/2" = 1"
dr. by: HAMID
chk. by:

drawing no.
M95–06A

DESIGN LOAD CAPACITY – PSF (TUBE MULLIONS)

WINDOW DIMS. WIDTH (W)	MULL SPAN	1 X 2 STD.	1 X 3 STD.	1 X 4 STD.	2 X 4 STD.	2 X 6 STD.
19-1/8"	38-3/8"	140.0	140.0	140.0	140.0	140.0
26-1/2"		136.2	140.0	140.0	140.0	140.0
30"		120.3	140.0	140.0	140.0	140.0
37"		97.6	140.0	140.0	140.0	140.0
42"		85.9	140.0	140.0	140.0	140.0
48"		75.2	140.0	140.0	140.0	140.0
53-1/8"		67.9	139.8	140.0	140.0	140.0
60"		60.2	123.8	140.0	140.0	140.0
66"		54.7	112.5	140.0	140.0	140.0
72"		50.1	103.2	140.0	140.0	140.0
74"		48.8	100.4	140.0	140.0	140.0
19-1/8"	50-5/8"	82.2	140.0	140.0	140.0	140.0
26-1/2"		59.3	140.0	140.0	140.0	140.0
30"		52.4	140.0	140.0	140.0	140.0
37"		42.5	115.3	140.0	140.0	140.0
42"		37.4	101.6	140.0	140.0	140.0
48"		32.8	88.9	140.0	140.0	140.0
53-1/8"		29.6	80.3	129.3	140.0	140.0
60"		26.2	71.1	114.5	140.0	140.0
66"		23.8	64.7	104.1	140.0	140.0
72"		21.8	59.3	95.4	139.3	140.0
74"		21.2	57.7	92.8	135.6	140.0
19-1/8"	63"	42.7	122.1	140.0	140.0	140.0
26-1/2"		30.8	88.1	140.0	140.0	140.0
30"		27.2	77.8	140.0	140.0	140.0
37"		22.0	63.1	119.6	140.0	140.0
42"		–	55.6	105.6	140.0	140.0
48"		–	48.6	92.4	135.0	140.0
53-1/8"		–	43.9	83.5	121.9	140.0
60"		–	38.9	73.9	108.0	140.0
66"		–	35.4	67.2	98.2	140.0
72"		–	32.4	61.6	90.0	140.0
74"		–	31.5	60.0	87.5	140.0
19-1/8"	74-1/4"	26.1	74.6	140.0	140.0	140.0
26-1/2"		–	53.8	115.4	140.0	140.0
30"		–	47.5	101.9	140.0	140.0
37"		–	38.5	82.6	120.7	140.0
42"		–	33.9	72.8	106.4	140.0
48"		–	29.7	63.7	93.1	140.0
53-1/8"		–	26.8	57.6	84.1	140.0
60"		–	23.8	51.0	74.4	140.0
66"		–	21.6	46.3	67.7	131.0
72"		–	–	42.5	62.0	120.1
74"		–	–	41.3	60.4	116.9

DESIGN LOAD CAPACITY – PSF (TUBE MULLIONS)

WINDOW DIMS. WIDTH (W)	MULL SPAN	1 X 2 STD.	1 X 3 STD.	1 X 4 STD.	2 X 4 STD.	2 X 6 STD.
19-1/8"	84"	–	51.5	110.4	140.0	140.0
26-1/2"		–	37.2	79.7	116.4	140.0
30"		–	32.8	70.4	102.8	140.0
37"		–	26.6	57.1	83.4	140.0
42"		–	23.4	50.3	73.5	140.0
48"		–	20.5	44.0	64.3	140.0
53-1/8"		–	–	39.7	58.1	127.2
60"		–	–	35.2	51.4	112.6
66"		–	–	32.0	46.7	102.4
72"		–	–	29.3	42.8	93.8
74"		–	–	28.5	41.7	91.3
19-1/8"	96"	–	34.5	74.0	108.1	140.0
26-1/2"		–	24.9	53.4	78.0	140.0
30"		–	22.0	47.2	68.9	140.0
37"		–	–	38.2	55.9	139.8
42"		–	–	33.7	49.2	123.2
48"		–	–	29.5	43.1	107.8
53-1/8"		–	–	26.6	38.9	97.4
60"		–	–	23.6	34.4	86.2
66"		–	–	21.4	31.3	78.4
72"		–	–	–	28.7	71.8
74"		–	–	–	27.9	69.9
19-1/8"	108"	–	24.2	51.9	75.9	140.0
26-1/2"		–	–	37.5	54.8	140.0
30"		–	–	33.1	48.4	134.5
37"		–	–	26.9	39.2	109.1
42"		–	–	23.7	34.6	96.1
48"		–	–	20.7	30.2	84.1
53-1/8"		–	–	–	27.3	76.0
60"		–	–	–	24.2	67.3
66"		–	–	–	22.0	61.2
72"		–	–	–	20.2	56.1
74"		–	–	–	–	54.5
19-1/8"	120"	–	–	37.9	55.3	140.0
26-1/2"		–	–	27.3	39.9	111.0
30"		–	–	24.1	35.3	98.1
37"		–	–	–	28.6	79.5
42"		–	–	–	25.2	70.1
48"		–	–	–	22.0	61.3
53-1/8"		–	–	–	–	55.4
60"		–	–	–	–	49.0
66"		–	–	–	–	44.6
72"		–	–	–	–	40.9
74"		–	–	–	–	39.8

DESIGN LOAD CAPACITY – PSF (TUBE MULLIONS)

WINDOW DIMS. WIDTH (W)	MULL SPAN	1 X 2 STD.	1 X 3 STD.	1 X 4 STD.	2 X 4 STD.	2 X 6 STD.
19-1/8"	132"	–	–	28.5	41.6	115.6
26-1/2"		–	–	20.5	30.0	83.4
30"		–	–	–	26.5	73.7
37"		–	–	–	21.5	59.8
42"		–	–	–	–	52.6
48"		–	–	–	–	46.1
53-1/8"		–	–	–	–	41.6
60"		–	–	–	–	36.8
66"		–	–	–	–	33.5
72"		–	–	–	–	30.7
74"		–	–	–	–	29.9
19-1/8"	144"	–	–	21.9	32.0	89.0
26-1/2"		–	–	–	23.1	64.3
30"		–	–	–	20.4	56.8
37"		–	–	–	–	46.0
42"		–	–	–	–	40.5
48"		–	–	–	–	35.5
53-1/8"		–	–	–	–	32.1
60"		–	–	–	–	28.4
66"		–	–	–	–	25.8
72"		–	–	–	–	23.7
74"		–	–	–	–	23.0

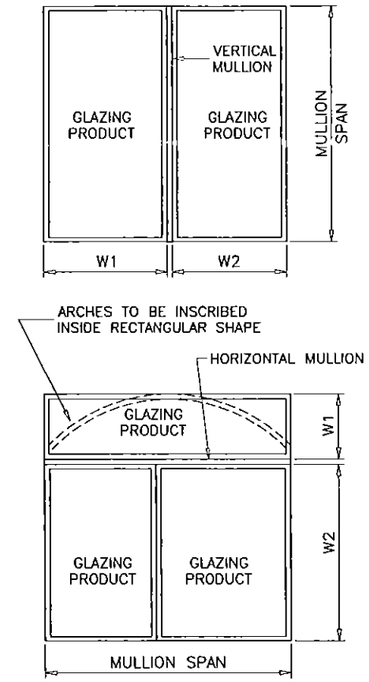

TYPICAL MULLION ARRANGEMENTS

$$\text{WIDTH (W)} = \frac{W1 + W2}{2}$$

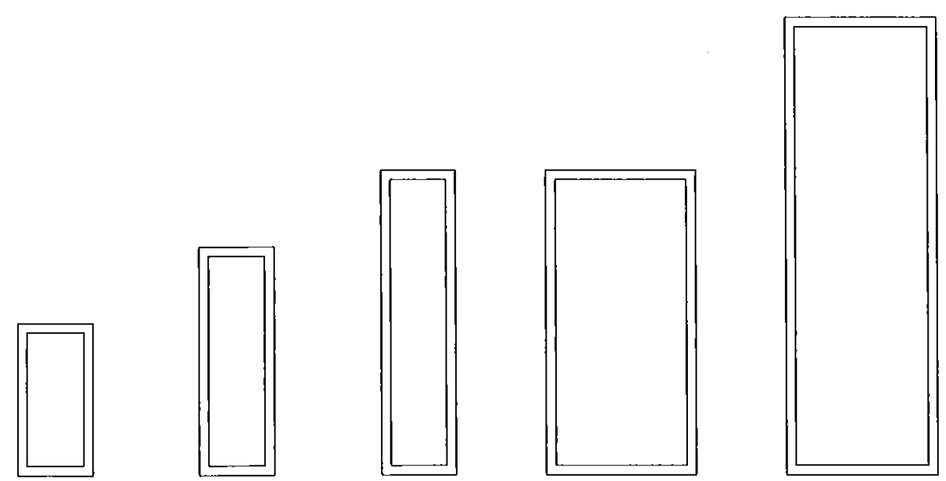

1 X 2 STD. TUBE		1 X 3 STD. TUBE		1 X 4 STD. TUBE		2 X 4 STD. TUBE		2 X 6 STD. TUBE	
Ix IN^4	Sx IN^3	Ix IN^4	Sx IN^3	Ix IN^4	Sx IN^3	Ix IN^4	Sx IN^3	Ix IN^4	Sx IN^3
.332	.332	.950	.633	2.037	1.019	2.976	1.488	8.276	2.758

NOTE:
MULLIONS RATED IN THESE CHARTS MAY BE ORIENTED VERTICALLY OR HORIZONTALLY.
(INTERPOLATION BETWEEN WIDTHS ALLOWED)

MULLIONS

PRODUCT REVISED
as complying with the Florida Building Code
Acceptance No 15-0818.06
Expiration Date DEC 24 2021
By Manuel Perez
Miami Dade Product Control

Engr: JAVAD AHMAD
CIVIL
FLA. PE # 70592
C.A.N. 3538
OCT 08 2015

AL-FAROOQ CORPORATION
ENGINEERS & PRODUCT DEVELOPMENT
1235 S.W. 87 AVE
MIAMI, FLORIDA 33174
TEL. (305) 264-8100 FAX. (305) 262-6978

MULLION\M95-06A

ALUMINUM TUBE MULLIONS

AWP WINDOWS AND DOORS, LLC
8130 N.W. 74TH AVE.
MEDLEY, FL. 33166
TEL. (305) 887-2646 FAX (305) 883-1309

revisions:

no	date	by	description
C	07.25.06	H	UPDATED FOR 2004 FBC
D	05.05.09		GENERAL REVISION
E	09.02.10		MANUF. NAME REVISED
F	11.18.11		UPDATED TO 2010 FBC, NAME REV
G	08.28.15		UPDATED TO 2014 FBC

date: 11-20-95
scale: –
dr. by: HAMID
chk. by:

drawing no.
M95-06A

DESIGN LOAD CAPACITY – PSF									
WINDOW DIMS.		ANCHORS TYPE							
WIDTH (W)	MULL SPAN	A2	A4	AA2	AA4	AAA2	AAA4	B2	B4
19 1/8"	38 3/8"	140.0	140.0	97.3	140.0	140.0	140.0	140.0	140.0
26 1/2"		114.4	140.0	70.2	140.0	140.0	140.0	140.0	140.0
30"		101.1	140.0	62.0	124.1	140.0	140.0	140.0	140.0
37"		81.9	140.0	50.3	100.6	129.0	140.0	140.0	140.0
42"		72.2	140.0	44.3	88.6	113.6	140.0	139.7	140.0
48"		63.2	126.3	38.8	77.6	99.4	140.0	122.3	140.0
54"		57.1	114.1	35.0	70.1	89.8	140.0	110.5	140.0
60"		50.5	101.1	31.0	62.0	79.6	140.0	97.8	140.0
66"		45.9	91.9	28.2	56.4	72.3	140.0	88.9	140.0
72"		42.1	84.2	25.9	51.7	66.3	132.6	81.5	140.0
74"		41.0	81.9	25.2	50.3	64.5	129.0	79.3	140.0
19 1/8"	50 5/8"	120.2	140.0	73.8	140.0	140.0	140.0	140.0	140.0
26 1/2"		86.7	140.0	53.2	106.5	136.5	140.0	140.0	140.0
30"		76.6	140.0	47.0	94.1	120.6	140.0	140.0	140.0
37"		62.1	124.2	38.1	76.3	97.8	140.0	120.2	140.0
42"		54.7	109.4	33.6	67.2	86.1	140.0	105.9	140.0
48"		47.9	95.8	29.4	58.8	75.4	140.0	92.7	140.0
54"		43.3	86.5	26.6	53.1	68.1	136.2	83.7	140.0
60"		38.3	76.6	23.5	47.0	60.3	120.6	74.1	140.0
66"		34.8	69.6	21.4	42.8	54.8	109.6	67.4	134.8
72"		31.9	63.8	–	39.2	50.3	100.5	61.8	123.6
74"		31.1	62.1	–	38.1	48.9	97.8	60.1	120.2
19 1/8"	63"	96.6	140.0	59.3	118.6	140.0	140.0	140.0	140.0
26 1/2"		69.7	139.4	42.8	85.6	109.7	140.0	134.9	140.0
30"		61.6	123.1	37.8	75.6	96.9	140.0	119.2	140.0
37"		49.9	99.8	30.6	61.3	78.6	140.0	96.6	140.0
42"		44.0	87.9	27.0	54.0	69.2	138.4	85.1	140.0
48"		38.5	77.0	23.6	47.2	60.6	121.1	74.5	140.0
54"		34.8	69.5	21.3	42.7	54.7	109.5	67.3	134.6
60"		30.8	61.6	–	37.8	48.5	96.9	59.6	119.2
66"		28.0	56.0	–	34.4	44.1	88.1	54.2	108.3
72"		25.7	51.3	–	31.5	40.4	80.8	49.7	99.3
74"		25.0	49.9	–	30.6	39.3	78.6	48.3	96.6
19 1/8"	74 1/4"	81.9	140.0	50.3	100.6	129.0	140.0	140.0	140.0
26 1/2"		59.1	118.3	36.3	72.6	93.1	140.0	114.5	140.0
30"		52.2	104.5	32.1	64.1	82.2	140.0	101.1	140.0
37"		42.4	84.7	26.0	52.0	66.7	133.3	82.0	140.0
42"		37.3	74.6	22.9	45.8	58.7	117.5	72.2	140.0
48"		32.6	65.3	20.0	40.1	51.4	102.8	63.2	126.4
54"		29.5	59.0	–	36.2	46.4	92.9	57.1	114.2
60"		26.1	52.2	–	32.1	41.1	82.2	50.6	101.1
66"		23.7	47.5	–	29.1	37.4	74.8	46.0	91.9
72"		21.8	43.5	–	26.7	34.3	68.5	42.1	84.3
74"		21.2	42.4	–	26.0	33.3	66.7	41.0	82.0

DESIGN LOAD CAPACITY – PSF									
WINDOW DIMS.		ANCHORS TYPE							
WIDTH (W)	MULL SPAN	A2	A4	AA2	AA4	AAA2	AAA4	B2	B4
19 1/8"	84"	72.4	140.0	44.5	88.9	114.0	140.0	140.0	140.0
26 1/2"		52.3	104.5	32.1	64.2	82.3	140.0	101.2	140.0
30"		46.2	92.3	28.3	56.7	72.7	140.0	89.4	140.0
37"		37.4	74.9	23.0	46.0	58.9	117.9	72.5	140.0
42"		33.0	66.0	20.2	40.5	51.9	103.8	63.8	127.7
48"		28.9	57.7	–	35.4	45.4	90.9	55.9	111.7
54"		26.1	52.1	–	32.0	41.0	82.1	50.5	100.9
60"		23.1	46.2	–	28.3	36.3	72.7	44.7	89.4
66"		21.0	42.0	–	25.8	33.0	66.1	40.6	81.2
72"		–	38.5	–	23.6	30.3	60.6	37.2	74.5
74"		–	37.4	–	23.0	29.5	58.9	36.2	72.5
19 1/8"	96"	63.4	126.7	38.9	77.8	99.8	140.0	122.7	140.0
26 1/2"		45.7	91.5	28.1	56.2	72.0	140.0	88.5	140.0
30"		40.4	80.8	24.8	49.6	63.6	127.2	78.2	140.0
37"		32.8	65.5	20.1	40.2	51.6	103.1	63.4	126.8
42"		28.9	57.7	–	35.4	45.4	90.9	55.9	111.7
48"		25.3	50.5	–	31.0	39.8	79.5	48.9	97.8
54"		22.8	45.6	–	28.0	35.9	71.8	44.2	88.3
60"		20.2	40.4	–	24.8	31.8	63.6	39.1	78.2
66"		–	36.7	–	22.5	28.9	57.8	35.5	71.1
72"		–	33.7	–	20.7	26.5	53.0	32.6	65.2
74"		–	32.8	–	20.1	25.8	51.6	31.7	63.4
19 1/8"	108"	56.3	112.7	34.6	69.2	88.7	140.0	109.0	140.0
26 1/2"		40.7	81.3	25.0	49.9	64.0	128.0	78.7	140.0
30"		35.9	71.8	22.0	44.1	56.5	113.1	69.5	139.0
37"		29.1	58.2	–	35.7	45.8	91.7	56.4	112.7
42"		25.7	51.3	–	31.5	40.4	80.8	49.7	99.3
48"		22.4	44.9	–	27.6	35.3	70.7	43.4	86.9
54"		20.3	40.6	–	24.9	31.9	63.8	39.3	78.5
60"		–	35.9	–	22.0	28.3	56.5	34.8	69.5
66"		–	32.6	–	20.0	25.7	51.4	31.6	63.2
72"		–	29.9	–	–	23.6	47.1	29.0	57.9
74"		–	29.1	–	–	22.9	45.8	28.2	56.4
19 1/8"	120"	50.7	101.4	31.1	62.2	79.8	140.0	98.1	140.0
26 1/2"		36.6	73.2	22.5	44.9	57.6	115.2	70.8	140.0
30"		32.3	64.6	–	39.7	50.9	101.8	62.6	125.1
37"		26.2	52.4	–	32.2	41.3	82.5	50.7	101.4
42"		23.1	46.2	–	28.3	36.3	72.7	44.7	89.4
48"		20.2	40.4	–	24.8	31.8	63.6	39.1	78.2
54"		–	36.5	–	22.4	28.7	57.5	35.3	70.7
60"		–	32.3	–	–	25.4	50.9	31.3	62.6
66"		–	29.4	–	–	23.1	46.3	28.4	56.9
72"		–	26.9	–	–	21.2	42.4	26.1	52.1
74"		–	26.2	–	–	20.6	41.3	25.4	50.7

DESIGN LOAD CAPACITY – PSF									
WINDOW DIMS.		ANCHORS TYPE							
WIDTH (W)	MULL SPAN	A2	A4	AA2	AA4	AAA2	AAA4	B2	B4
19 1/8"	132"	46.1	92.2	28.3	56.6	72.6	140.0	89.2	140.0
26 1/2"		33.3	66.5	20.4	40.8	52.4	104.7	64.4	128.8
30"		29.4	58.8	–	36.1	46.3	92.5	56.9	113.7
37"		23.8	47.6	–	29.2	37.5	75.0	46.1	92.2
42"		21.0	42.0	–	25.8	33.0	66.1	40.6	81.2
48"		–	36.7	–	22.5	28.9	57.8	35.5	71.1
54"		–	33.2	–	20.4	26.1	52.2	32.1	64.2
60"		–	29.4	–	–	23.1	46.3	28.4	56.9
66"		–	26.7	–	–	21.0	42.0	25.9	51.7
72"		–	24.5	–	–	–	38.5	23.7	47.4
74"		–	23.8	–	–	–	37.5	23.1	46.1
19 1/8"	144"	42.2	84.5	25.9	51.9	66.5	133.0	81.8	140.0
26 1/2"		30.5	61.0	–	37.4	48.0	96.0	59.0	118.0
30"		26.9	53.9	–	33.1	42.4	84.8	52.1	104.3
37"		21.8	43.7	–	26.8	34.4	68.8	42.3	84.5
42"		–	38.5	–	23.6	30.3	60.6	37.2	74.5
48"		–	33.7	–	20.7	26.5	53.0	32.6	65.2
54"		–	30.4	–	–	23.9	47.9	29.4	58.9
60"		–	26.9	–	–	21.2	42.4	26.1	52.1
66"		–	24.5	–	–	–	38.5	23.7	47.4
72"		–	22.4	–	–	–	35.3	21.7	43.4
74"		–	21.8	–	–	–	34.4	21.1	42.3

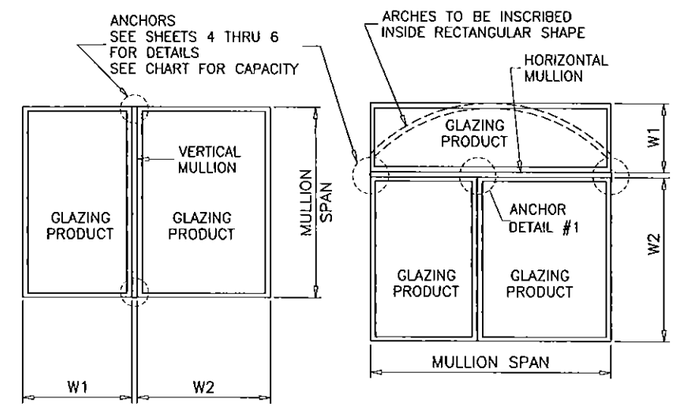

TYPICAL MULLION ARRANGEMENTS

$$\text{WIDTH (W)} = \frac{W1 + W2}{2}$$

NOTE:
ANY ANCHOR CONDITION SHOWN HEREIN MAY COVER LOCATIONS AT HEAD, SILL OR JAMB ENDS.
FOR ANCHORS DESCRIPTION SEE SHEETS 4 THRU 6.
(INTERPOLATION BETWEEN WIDTHS OR SPANS ALLOWED)

ANCHORS

PRODUCT REVISED
as complying with the Florida
Building Code
Acceptance No 15-0818.06
Expiration Date DEC 24 2021
By Manuel Perez
Miami-Dade Product Control

Engr: JAVAD AHMAD
CIVIL
FLA. PE # 70592
C.A.N. 3538
OCT 0 2015

AL-FAROOQ CORPORATION
ENGINEERS & PRODUCT DEVELOPMENT
1235 S.W. 87 AVE
MIAMI, FLORIDA 33174
TEL. (305) 264-8100 FAX. (305) 262-6978

MULLION\M95-06A

ALUMINUM TUBE MULLIONS

AWP WINDOWS AND DOORS, LLC
8130 N.W. 74TH AVE.
MEDLEY, FL. 33166
TEL. (305) 887-2646 FAX (305) 883-1309

revisions:

no	date	by	description
C	07.25.06	H	UPDATED FOR 2004 FBC
D	05.05.09		GENERAL REVISION
E	09.02.10		MANUF. NAME REVISED
F	11.18.11		UPDATED TO 2010 FBC, NAME REV
G	08.28.15		UPDATED TO 2014 FBC

date: 11-20-95
scale: –
dr. by: HAMID
chk. by:

drawing no.
M95-06A

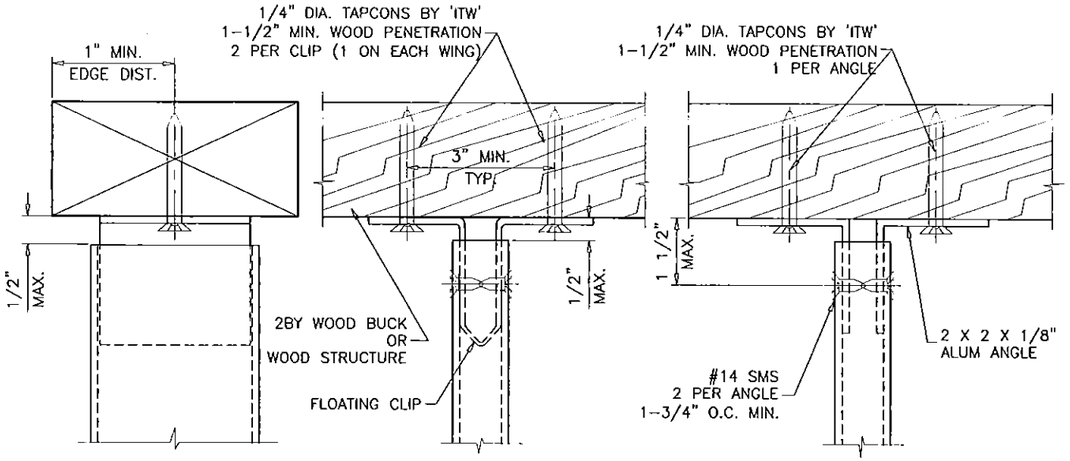

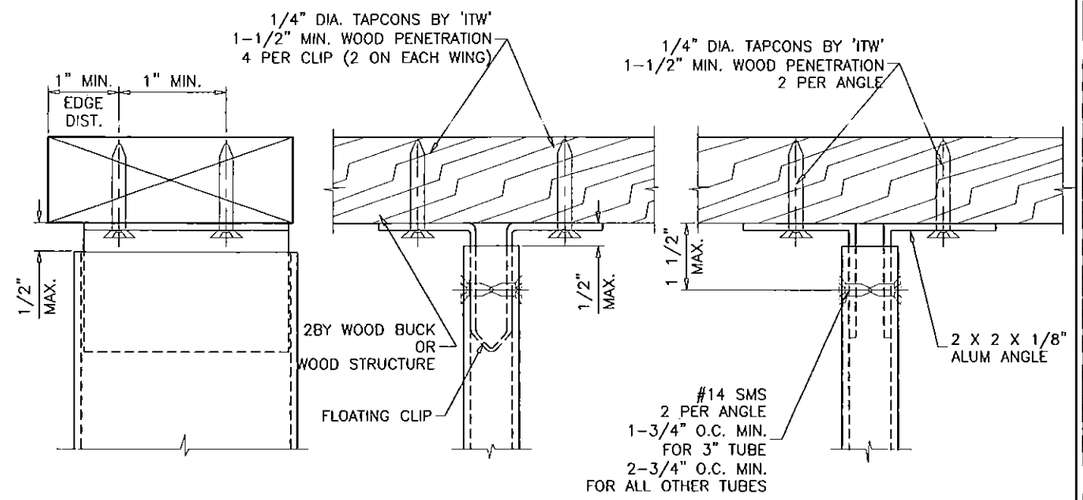

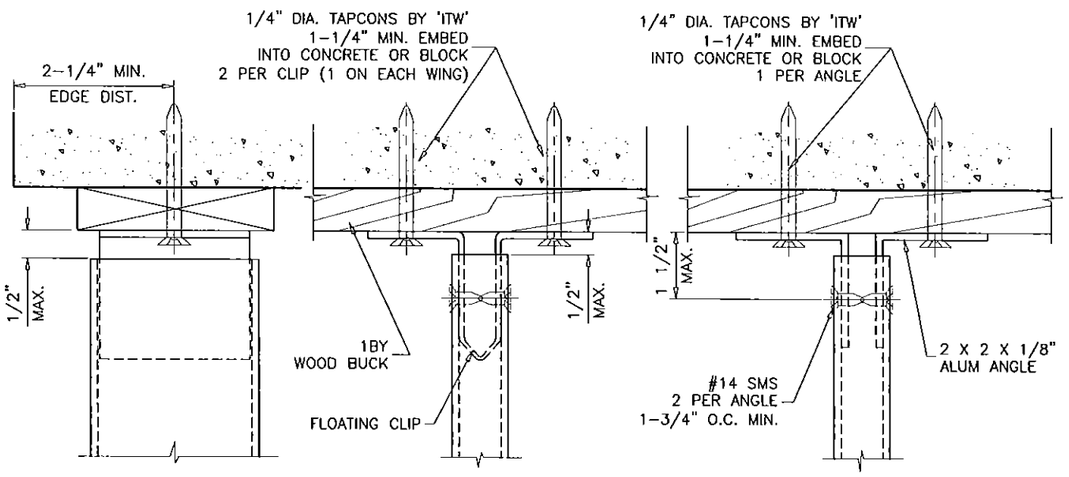

ANCHORS TYPE 'A2'

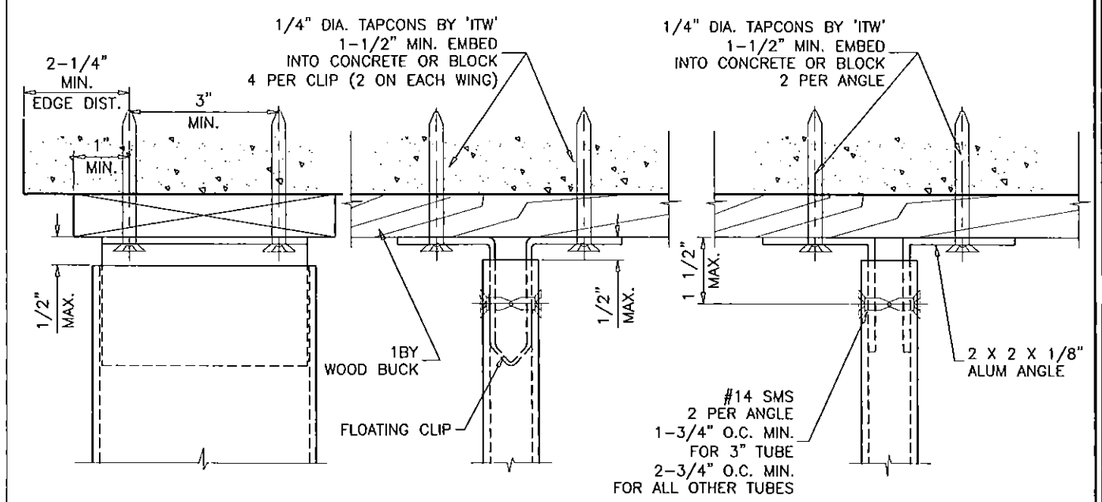

ANCHORS TYPE 'A4'

PRODUCT REVISED
as complying with the Florida
Building Code
Acceptance No 15-0818.06
Expiration Date DEC 24 2021
By Manuel Perez
Miami Dade Product Control

ALL CLIPS TO FIT SNUG INTO TUBE MULLIONS.
TAPCONS MAY BE HEX OR FLAT HEAD.

Engr: JAVAD AHMAD
CIVIL
FLA. PE # 70592
C.A.N. 3538
OCT 08 2015

AL-FAROOQ CORPORATION
ENGINEERS & PRODUCT DEVELOPMENT
1235 S.W. 87 AVE
MIAMI, FLORIDA 33174
TEL (305) 264-8100 FAX. (305) 262-6978

MULLION\M95-06A

ALUMINUM TUBE MULLIONS

AWP WINDOWS AND DOORS, LLC
8130 N.W. 74TH AVE.
MEDLEY, FL. 33166
TEL. (305) 887-2646 FAX (305) 883-1309

revisions:

no	date	by	description
C	07.25.06	H	UPDATED FOR 2004 FBC
D	05.05.09		GENERAL REVISION
E	09.02.10		MANUF. NAME REVISED
F	11.18.11		UPDATED TO 2010 FBC, NAME REV
G	08.28.15		UPDATED TO 2014 FBC

date: 11-20-95
scale: 3/8" = 1"
dr. by: HAMID
chk. by:

drawing no.
M95-06A

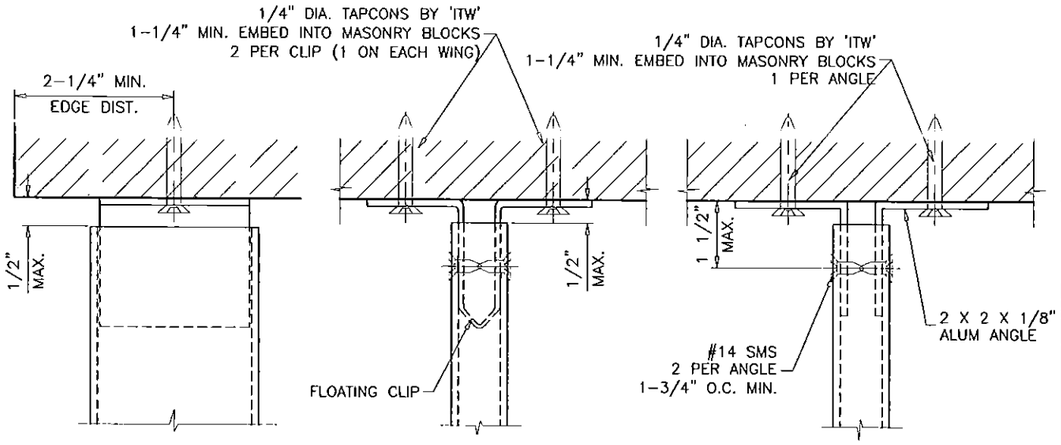

ANCHORS TYPE 'AA2'

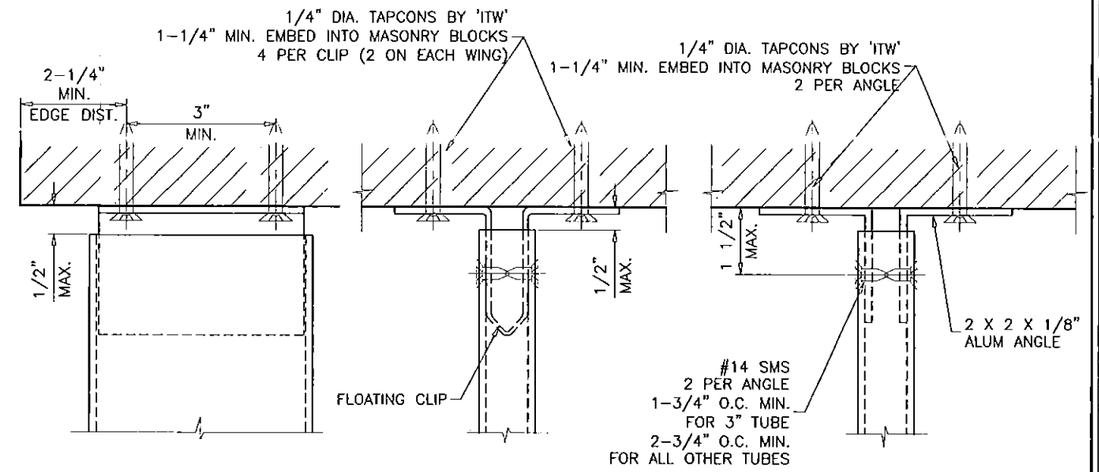

ANCHORS TYPE 'AA4'

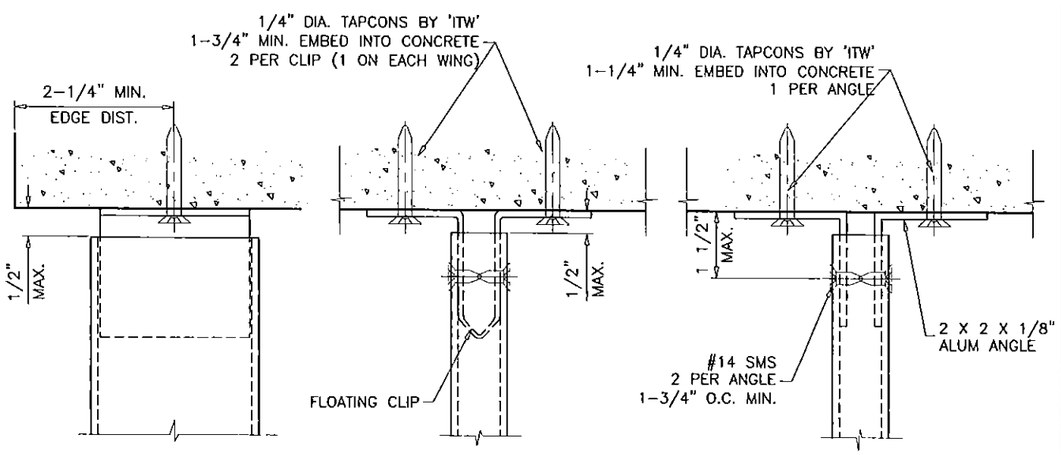

ANCHORS TYPE 'AAA2'

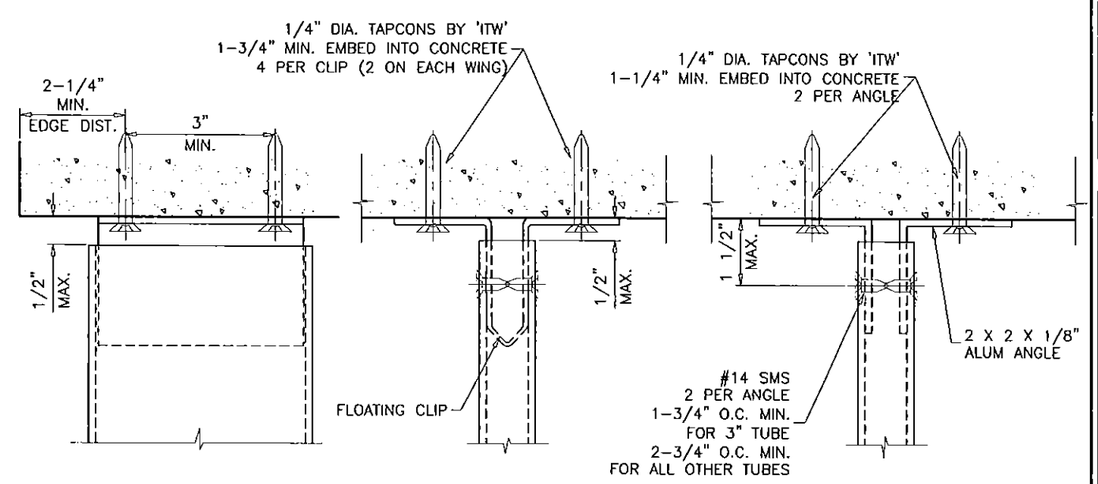

ANCHORS TYPE 'AAA4'

ALL CLIPS TO FIT SNUG INTO TUBE MULLIONS.
TAPCONS MAY BE HEX OR FLAT HEAD.

PRODUCT REVISED
as complying with the Florida
Building Code
Acceptance No 15-0818.06
Expiration Date DEC 24 2021
By Manuel Perez
Miami-Dade Product Control

Engr: JAVAD AHMAD
CIVIL
FLA. PE # 70592
C.A.N. 3538

OCT 02 2015

AL-FAROOQ CORPORATION
ENGINEERS & PRODUCT DEVELOPMENT
1235 S.W. 87 AVE
MIAMI, FLORIDA 33174
TEL. (305) 264-8100 FAX. (305) 262-6978

MULLION\M95-06A

ALUMINUM TUBE MULLIONS

AWP WINDOWS AND DOORS, LLC
8130 N.W. 74TH AVE.
MEDLEY, FL. 33166
TEL. (305) 887-2646 FAX (305) 883-1309

revisions:

no	date	by	description
C	07.25.06	H	UPDATED FOR 2004 FBC
D	05.05.09		GENERAL REVISION
E	09.02.10		MANUF. NAME REVISED
F	11.18.11		UPDATED TO 2010 FBC, NAME REV
G	08.28.15		UPDATED TO 2014 FBC

date: 11-20-95
scale: 3/8" = 1"
dr. by: HAMID
chk. by:

drawing no.
M95-06A

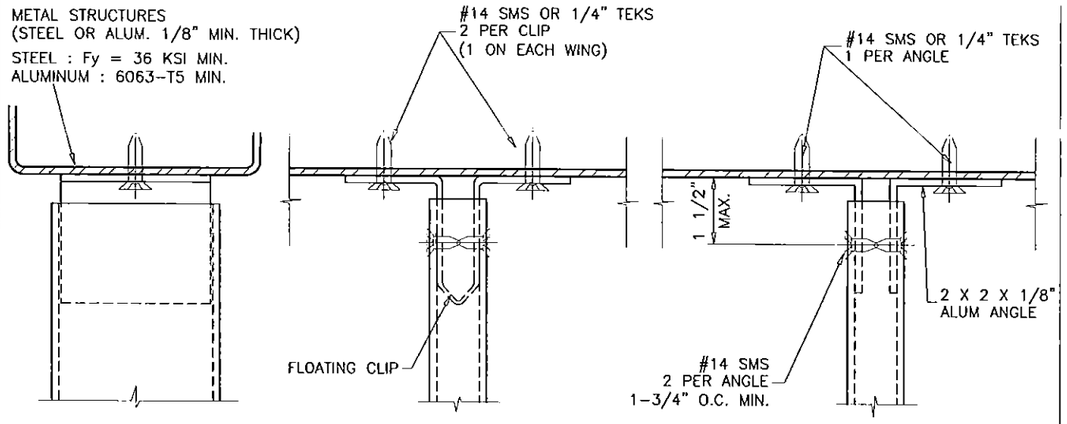

ANCHORS TYPE 'B2'

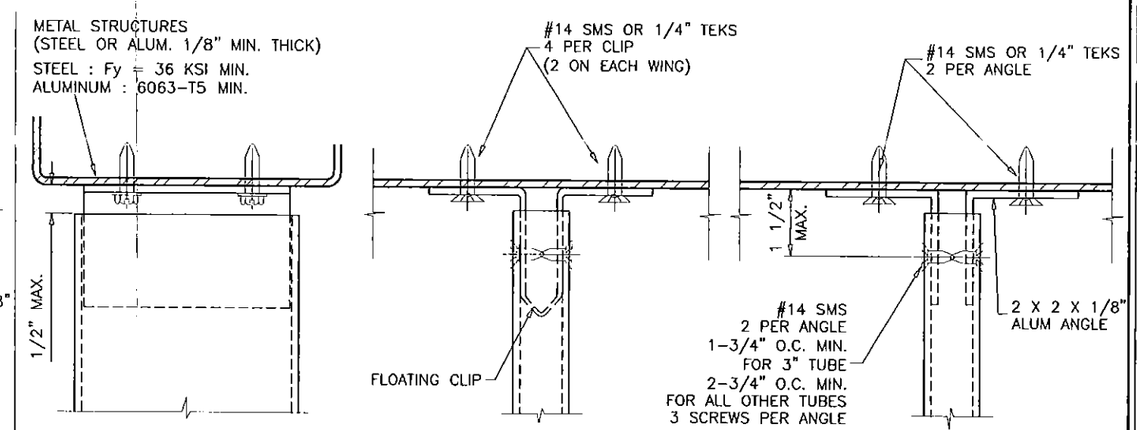

ANCHORS TYPE 'B4'

ALL CLIPS TO FIT SNUG INTO TUBE MULLIONS.
TAPCONS MAY BE HEX OR FLAT HEAD.

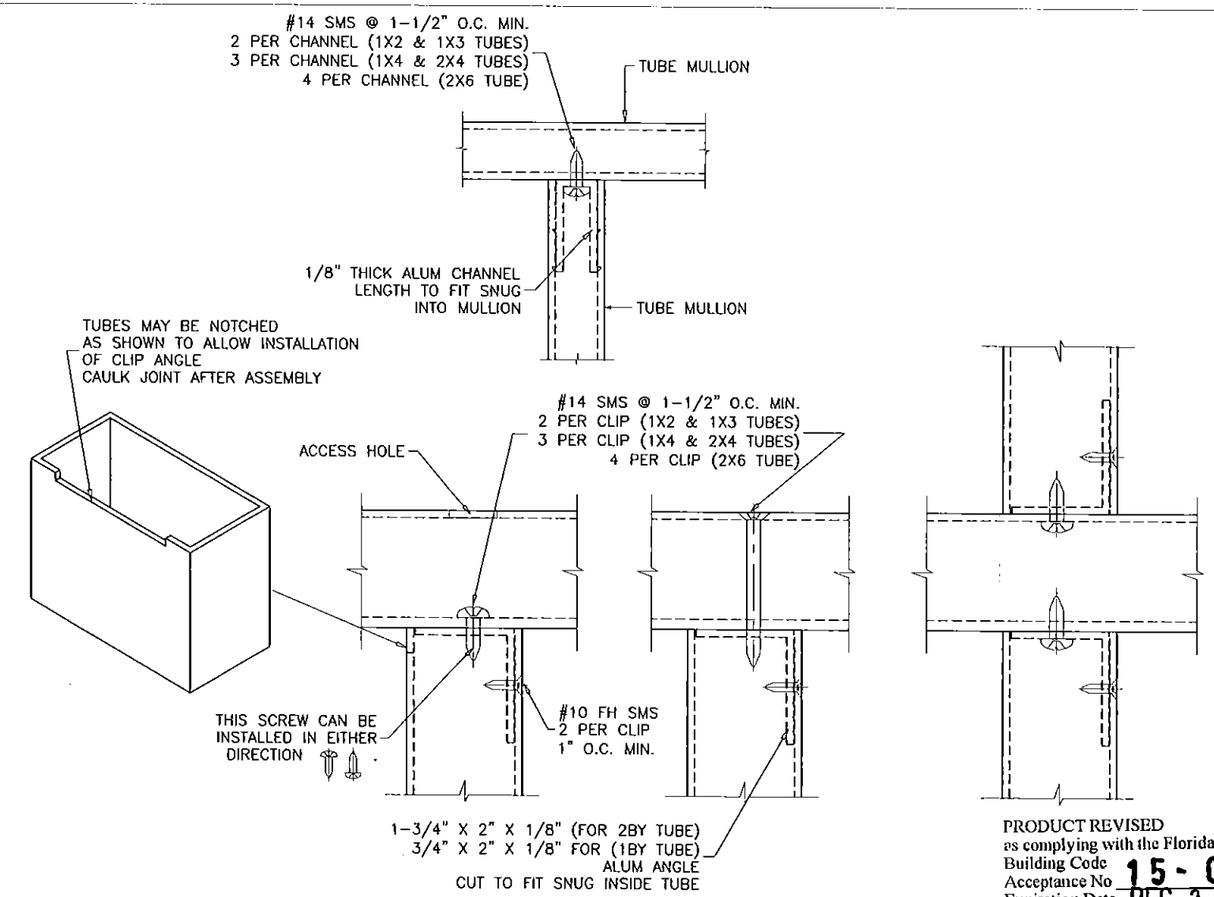

ANCHOR DETAIL #1

METAL TO METAL CONNECTION

PRODUCT REVISED
as complying with the Florida
Building Code
Acceptance No 15-0818.06
Expiration Date DEC 24 2021

By _____
Miami Dade Product Control

Engr: JAVAD AHMAD
CIVIL
FLA. PE # 70592
C.A.N. 3538

OCT 08 2021

AL-FAROOQ CORPORATION
ENGINEERS & PRODUCT DEVELOPMENT
1235 S.W. 87 AVE
MIAMI, FLORIDA 33174
TEL. (305) 264-8100 FAX. (305) 262-6978

MULLION\M95-06A

ALUMINUM TUBE MULLIONS

AWP WINDOWS AND DOORS, LLC
8130 N.W. 74TH AVE.
MEDLEY, FL. 33166
TEL. (305) 887-2646 FAX (305) 883-1309

revisions:

no	date	by	description
C	07.25.06	H	UPDATED FOR 2004 FBC
D	05.05.09		GENERAL REVISION
E	09.02.10		MANUF. NAME REVISED
F	11.18.11		UPDATED TO 2010 FBC, NAME REV
G	08.28.15		UPDATED TO 2014 FBC

date: 11-20-95
scale: 3/8" = 1"
dr. by: HAMID
chk. by:

drawing no.
M95-06A

sheet 6 of 6