MIAMI-DADE COUNTY
PRODUCT CONTROL SECTION
11805 SW 26 Street, Room 208
Miami, Florida 33175-2474
T (786) 315-2590 F (786) 315-2599
www.miamidade.gov/economy

DEPARTMENT OF REGULATORY AND ECONOMIC RESOURCES (RER)
BOARD AND CODE ADMINISTRATION DIVISION

NOTICE OF ACCEPTANCE (NOA)

Schlage Lock Company
6810 Hillsdale Court
Indianapolis, IN 46250

SCOPE:

This NOA is being issued under the applicable rules and regulations governing the use of construction materials. The documentation submitted has been reviewed and accepted by Miami-Dade County RER -Product Control Section to be used in Miami Dade County and other areas where allowed by the Authority Having Jurisdiction (AHJ).

This NOA shall not be valid after the expiration date stated below. The Miami-Dade County Product Control Section (In Miami Dade County) and/or the AHJ (in areas other than Miami Dade County) reserve the right to have this product or material tested for quality assurance purposes. If this product or material fails to perform in the accepted manner, the manufacturer will incur the expense of such testing and the AHJ may immediately revoke, modify, or suspend the use of such product or material within their jurisdiction. RER reserves the right to revoke this acceptance, if it is determined by Miami-Dade County Product Control Section that this product or material fails to meet the requirements of the applicable building code.

This product is approved as described herein, and has been designed to comply with the Florida Building Code, including the High Velocity Hurricane Zone.

DESCRIPTION:SteelCraft H Series Single glazed Outswing Commercial Steel Door w/wo Panic Exit-LMI

APPROVAL DOCUMENT: Drawing No **IRGS07 Rev L**, titled "Steelcraft H series Single outswing glazed", sheets 1 through 15 of 15, prepared by the manufacturer, dated 05-20-07 and last revised on 08/10/15, signed and sealed by Thomas Gordon, P.E., bearing the Miami-Dade County Product Control Revision stamp with the Notice of Acceptance number and expiration date by the Miami-Dade County Product Control Section.

MISSILE IMPACT RATING: Large and Small Missile Impact

Limitations:

1. See Design Pressures, Sizes, Hardware, DLO (Day light Opening) and Water infiltration limitations in sheets **1, 2, 5, 7 & 8** of the drawings. Lower design Pressure shall control.
2. See limitations of DLO (vision) for configurations **9, 9A, 10** and **10A,** in sheet **7.**
3. Electrical/Electronic functions and Fire ratings are **not** part of this approval, such functions to be reviewed and approved by AHJ.

LABELING: Each unit shall bear a permanent label with the manufacturer's name or logo, Cincinnati, Ohio and Series and following statement: "Miami-Dade County Product Control Approved", unless otherwise noted herein.

RENEWAL of this NOA shall be considered after a renewal application has been filed and there has been no change in the applicable building code negatively affecting the performance of this product.

TERMINATION of this NOA will occur after the expiration date or if there has been a revision or change in the materials, use, and/or manufacture of the product or process. Misuse of this NOA as an endorsement of any product, for sales, advertising or any other purposes shall automatically terminate this NOA. Failure to comply with any section of this NOA shall be cause for termination and removal of NOA.

ADVERTISEMENT: The NOA number preceded by the words Miami-Dade County, Florida, and followed by the expiration date may be displayed in advertising literature. If any portion of the NOA is displayed, then it shall be done in its entirety.

INSPECTION: A copy of this entire NOA shall be provided to the user by the manufacturer or its distributors and shall be available for inspection at the job site at the request of the Building Official.

This NOA **revises & renews NOA #13-1217.14** and consists of this page 1 and evidence pages E-1, E-2 and E-3, as well as approval document mentioned above.

The submitted documentation was reviewed by **Ishaq I. Chanda, P.E.**

MIAMI-DADE COUNTY APPROVED

3/24/16

Schlage Lock Company

NOTICE OF ACCEPTANCE: EVIDENCE SUBMITTED

A. DRAWINGS

1. Manufacturer's parts and sections drawings (Submitted under file as below).
2. Drawing No **IRGS07 Rev L**, titled "Steelcraft H series Single outswing glazed", sheets 1 through 15 of 15, prepared by the manufacturer, dated 05-20-07 and last revised on 08/10/15, signed and sealed by Thomas Gordon, P.E.

B. TESTS (Submitted under files **#13-1217.14/#12-0305.16/ #10-0209.09/#07-0829.06**)

1. Test report on
   1) Air Infiltration Test, per TAS 202-94
   2) Uniform Static Air Pressure Test, Loading per TAS 202-94
   3) Large Missile Impact Test per FBC, TAS 201-94
   4) Cyclic Wind Pressure Loading per FBC, TAS 203-94
   5) Forced Entry Test, per PA 202-94

   Along with manufacturer's parts and section drawings of Single outswing steel doors w/ Stainless steel continuous Hinges & modified Hat stiffeners, marked by Certified Testing Lab, Test Reports No(s). **CTLA-3045W** dated February 16, 2015, signed and sealed by Ramesh Patel, P.E.
2. Test report on
   1) Air Infiltration Test, per TAS 202-94
   2) Uniform Static Air Pressure Test, Loading per TAS 202-94
   3) Large Missile Impact Test per FBC, TAS 201-94
   4) Cyclic Wind Pressure Loading per FBC, TAS 203-94
   5) Forced Entry Test, per PA 202-94

   Along with manufacturer's parts and section drawings of double outswing steel doors w/CVC panic exit and Peep hole, marked by Element Material Technology, Test Reports No(s). **ESP011623P** dated May 14, 2013, signed and sealed by Jason Sheen, P.E.
3. Test reports
   1) Uniform Static Air Pressure Test, Loading per FBC TAS 202-94.
   2) Water Resistance Test per FBC TAS 202-94

   Along with marked-up drawings and installation diagram of double steel commercial doors, prepared by National Certified Testing Laboratories Inc., Test Report No. **NCTL- 210-03-0514-11,** dated August 31, 2004 , **NCTL 210- 03-3511-1** dated 04/09/08 and **NCTL 210- 03-3549-1** dated 08/26/08, all signed and sealed by Gerry Ferrara, P. E.

   Note: Test report No(s): NCTL210-3549-1 and NCTL-210-3511-1 have been revised by an addendum letter, issued by Lab, dated Feb. 04, 2009, signed & sealed by Gerard J. Ferrara, P. E
4. Test report on
   1) Uniform Static Air Pressure Test, Loading per TAS 202-94
   2) Large Missile Impact Test per FBC, TAS 201-94
   3) Cyclic Wind Pressure Loading per FBC, TAS 203-94
   4) Forced Entry Test, per PA 202-94

   Along with manufacturer's parts and section drawings of double flush outswing steel doors, marked by National Certified Testing Lab, Test Reports No. **NCTL-210- 3580-2,** dated March 25, 2009, signed and sealed by Gerry Ferrara, P. E.

Ishaq I. Chanda

Ishaq I. Chanda, P.E.
Product Control Examiner
NOA No. 15-0826.22
Expiration Date: May 05, 2017
Approval Date: March 31, 2016

NOTICE OF ACCEPTANCE: EVIDENCE SUBMITTED

B. TESTS (continue)

5. Test report on (submitted under file # **07-0829.06**)
   1) Air Infiltration Test, per TAS 202-94
   2) Uniform Static Air Pressure Test, Loading per TAS 202-94
   3) Large Missile Impact Test per FBC, TAS 201-94
   4) Cyclic Wind Pressure Loading per FBC, TAS 203-94
   5) Forced Entry Test, per PA 202-94

Along with manufacturer's parts and section drawings of double glazed outswing steel doors, marked by Certified Testing Lab, Test Reports No(s). **CTLA-776W** dated February 20, 2002, **CTLA-975W** dated Jan 23, 2003, **CTLA-882W** dated Aug 29, 2002, **CTLA-1035W** dated May 28, 2003 and , **CTLA-1086-W** dated Nov. 17, 2003 and **CTLA-1107W-3** dated June 30, 2004, all signed and sealed by Ramesh Patel, P.E.

Note: Test report CTLA-1035W has been revised by an addendum letter dated Feb 20, 2009, signed and sealed by Ramesh Patel, P.E.

Along with manufacturer's parts and section drawings of glazed outswing double steel doors, marked by Certified Testing Lab, Test Reports No(s). **NCTL-210-3232-1** dated 02/24/06 and **NCTL-210-3357-1** dated Dec 28, 2006, signed and sealed by Gerard J. Ferrara, P.E.

6. Additional Reference test report No.CTLA-1107W for strap anchor qualification.

C. CALCULATIONS: (Submitted under file # **10-0209.09**)

1. Anchor verification calculation complying w/ FBC 2014(5th Edition) dated 08/10/15, prepared, signed & sealed by Thomas Gordon., P.E.
2. Hinge Load Evaluation report dtd 01/04/04, prepared, signed & sealed by Thomas Gordon, P.E. (Submitted under file # **10-0209.09**)

D. QUALITY ASSURANCE BY

1. Miami Dade Department of Regulatory and Economic Resources (RER).

E. MATERIAL CERTIFICATIONS (submitted under files **#12-0305.16/# 10-0209.09**)

1. Notice of Acceptance No. **13–0717.01** issued to **Sabic Innovative Plastics** for their **"Lexan® Polycarbonate Sheet Products"**, expiring on July 17, 2018.
2. Notice of Acceptance No. **11-0624.02** issued to E.I. DuPont DeNemours & Co., Inc. for their **"DuPont Sentry Glass ® interlayer"**, expiring on 01/14/17.
3. Material composition & Flammability properties and Material Safety Data sheet of Pyrophobic P25C-60 core by Pyrophobic System LTD, dated DEC 05, 2010, issued by I. Zhvanetsky, chemical consultant.
4. Material composition & Flammability properties and Material Safety Data sheet of Calcium Silicate mineral block, issued by Marshfield Door Sys, Inc., Marshfield. WI 54449.
5. Test Report No. **12-11177**, Nov 29, 2012, issued by Commercial Testing Co. for "Surface Flame spread & Smoke density Characteristics of Building material" per ASTME84-12 for "Elfoam P200", issued to Elliott Co. of Indianapolis Inc.

Ishaq I. Chanda

Ishaq I. Chanda, P.E.
Product Control Examiner
NOA No. 15-0826.22
Expiration Date: May 05, 2017
Approval Date: March 31, 2016

NOTICE OF ACCEPTANCE: EVIDENCE SUBMITTED

E. MATERIAL CERTIFICATIONS (continue)

6. Test Report No. **16206-122543 (1015P200(3))**, dated November 29, 2004 for " Surface Burning Characteristics of Bldg material" per ASTME84 and self-Ignition per ASTM1929D for "Polyisocyanurate" issued by Omega Point Laboratories, Inc. to Elliot Co., Indianapolis, IN.
7. Tensile test report # CTLA-776W (0194H), dtd 02/25/02 prepared by CTL, Architectural Division, sheet samples, tested per ASTM E8, signed & sealed by Ramesh Patel, P.E.
8. Tensile Test report No: A103W1-Test 1, 2 & 3 dated 23 APR 03 per ASTME-8 for steel face sheet, prepared by Certified Testing laboratory, signed and sealed by Ramesh Patel, P.E.
9. Test Report No. **3094867SAT-001**, April 13, 2006, issued by Intertek for "Surface Burning Characteristics of Building material" per ASTME84 and self-Ignition per ASTM1929D for "EPS", issued to Falcon Foam, a Div of Atlas Roofing, re-named as "ATLAS EPS'.

F. STATEMENTS: Except items #1, balanced items submitted under files **#12-0305.16/ #10-0209.09**

1. Letter of conformance to **FBC 2014** and **"**No financial interest**"**, dated 08/18/15, prepared, signed and sealed by Gordon Thomas, P.E.
2. Statement letter dated Nov. 26, 2013 issued by Ingersoll-Rand for name change, signed by Jim Donlan, Compliance Engineer.
3. Ingersoll–Rand press release, dated 12/10/12, integrating the brands of Ingersoll–Rand and Schlage among others.
4. Department of State Certification of Reinstatement for **SCHLAGE LOCK COMPANY, LLC** as a limited liability company, active and organized under the laws of the State of Florida, dated 03/17/06 and filed with the Secretary of State
5. Certification of Formation dated 12-08-2003 of Schlage Lock Company, LLC, issued by Secretary of State of Delaware.
6. Statement letter of conformance to FBC 2007 and no financial interest, dated June 08, 2008, prepared, signed and sealed by Gordon Thomas, P.E
7. Laboratory Compliance Statements issued as part of above test reports.
8. Addendum letters dated Feb 20, 2009 for test reports Test report CTLA-1035W, issued by Certified Testing lab, signed and sealed by Ramesh Patel, P.E
9. Addendum letter dated DEC 19, 2011, issued by Certified Testing Lab verifying wire anchors, strength of grout, stud anchor, Strike plate and MA series Mortise Lock, supplemented w/ marked-up drawings, signed and sealed by Ramesh Patel, P.E.
10. Letter of certification dated 04/20/10, issued by Ingersoll-Rand for electronic CO lock series mechanical /functional parts same as AD, ND and AD-M series.

G. OTHER

1. This NOA **revises & renews NOA #13-1217.14,** expiring on 05/05/17.
2. **One** year conditional approval, subjected to successful verification test.
3. Request for 1-Year renewal by Schlage Company dated 02/02/16, signed by James Donlan.
4. Test proposals # **14-0252**, **-0254**, **#14-1086**, **#14-0254-R1** and **#12-0797R** approved by RER.
5. Consolidation Test proposal # **06-2468**, dated 04/27/07 approved by BCCO.
6. Technical brochures of butt Hinges, continuous Hinges, Schlage & Falcon Mortise Locks, Supplied by Schlage Company (former Ingersoll-Rand).

Ishaq I. Chanda

Ishaq I. Chanda, P.E.
Product Control Examiner
NOA No. 15-0826.22
Expiration Date: May 05, 2017
Approval Date: March 31, 2016

MORTISE LOCKSET WITH OR WITHOUT DEADBOLT

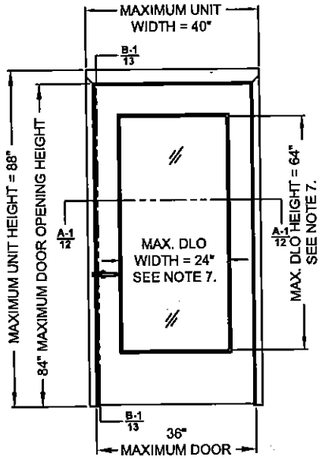

CONFIG.	DESIGN PRESSURE RATING, PSF	
	WHERE WATER INFILTRATION REQUIREMENT IS NEEDED	WHERE WATER INFILTRATION REQUIREMENT IS NOT NEEDED
1	±75	±75

CYLINDRICAL LOCKSET 1/2" MIN. THROW LATCH

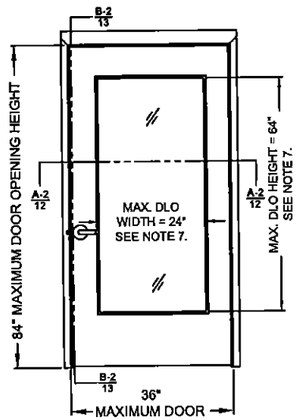

CONFIG.	DESIGN PRESSURE RATING, PSF	
	WHERE WATER INFILTRATION REQUIREMENT IS NEEDED	WHERE WATER INFILTRATION REQUIREMENT IS NOT NEEDED
2	±75	±75

SURFACE VERTICAL ROD EXIT DEVICE

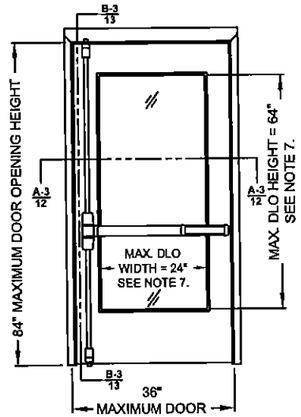

CONFIG.	DESIGN PRESSURE RATING, PSF	
	WHERE WATER INFILTRATION REQUIREMENT IS NEEDED	WHERE WATER INFILTRATION REQUIREMENT IS NOT NEEDED
3	±60	±60

CONCEALED VERTICAL ROD EXIT DEVICE

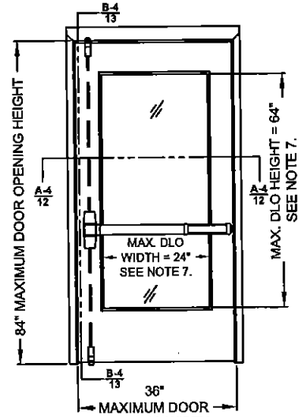

CONFIG.	DESIGN PRESSURE RATING, PSF	
	WHERE WATER INFILTRATION REQUIREMENT IS NEEDED	WHERE WATER INFILTRATION REQUIREMENT IS NOT NEEDED
4	±60	±60

THREE-POINT LATCHING EXIT DEVICE

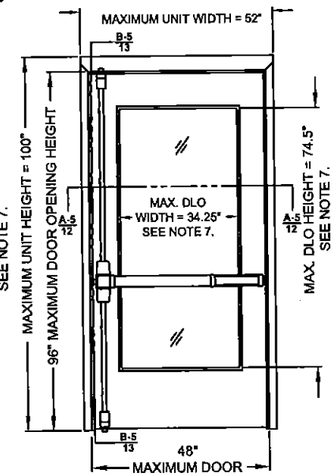

CONFIG.	DESIGN PRESSURE RATING, PSF	
	WHERE WATER INFILTRATION REQUIREMENT IS NEEDED	WHERE WATER INFILTRATION REQUIREMENT IS NOT NEEDED
5	±50	±50

THREE-POINT LATCHING EXIT DEVICE

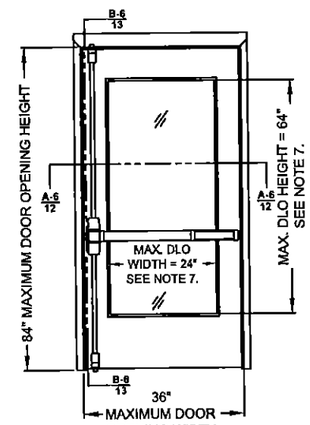

CONFIG.	DESIGN PRESSURE RATING, PSF	
	WHERE WATER INFILTRATION REQUIREMENT IS NEEDED	WHERE WATER INFILTRATION REQUIREMENT IS NOT NEEDED
6	±60	±60

RIM EXIT DEVICE

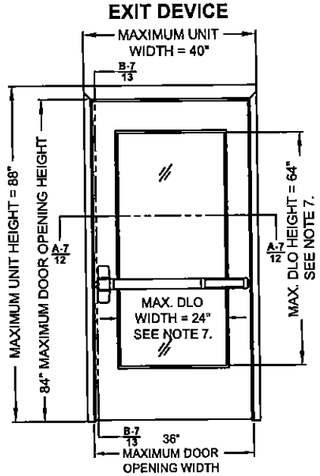

CONFIG.	DESIGN PRESSURE RATING, PSF	
	WHERE WATER INFILTRATION REQUIREMENT IS NEEDED	WHERE WATER INFILTRATION REQUIREMENT IS NOT NEEDED
7	±60	±60

RIM EXIT DEVICE

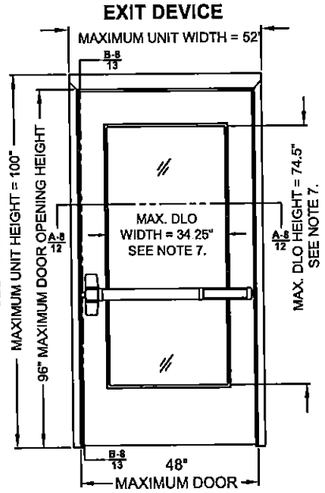

CONFIG.	DESIGN PRESSURE RATING, PSF	
	WHERE WATER INFILTRATION REQUIREMENT IS NEEDED	WHERE WATER INFILTRATION REQUIREMENT IS NOT NEEDED
8	±50	±50

RIM EXIT DEVICE

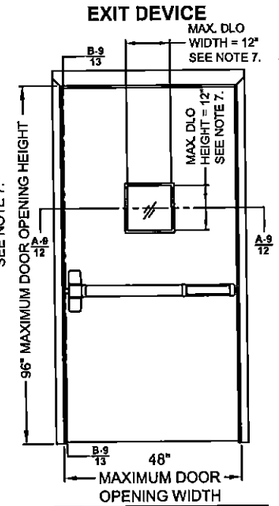

CONFIG.	DESIGN PRESSURE RATING, PSF	
	WHERE WATER INFILTRATION REQUIREMENT IS NEEDED	WHERE WATER INFILTRATION REQUIREMENT IS NOT NEEDED
9	±75	±100

RIM EXIT DEVICE

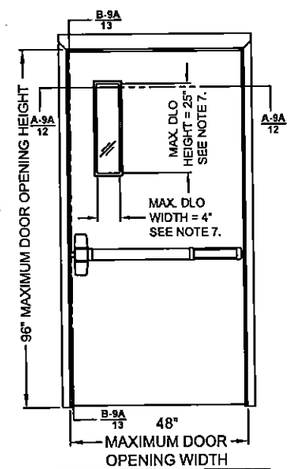

CONFIG.	DESIGN PRESSURE RATING, PSF	
	WHERE WATER INFILTRATION REQUIREMENT IS NEEDED	WHERE WATER INFILTRATION REQUIREMENT IS NOT NEEDED
9A	±75	±100

EXIT ALARM LOCK

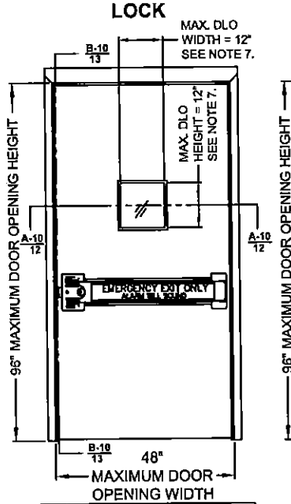

CONFIG.	DESIGN PRESSURE RATING, PSF	
	WHERE WATER INFILTRATION REQUIREMENT IS NEEDED	WHERE WATER INFILTRATION REQUIREMENT IS NOT NEEDED
10	±55	±55

EXIT ALARM LOCK

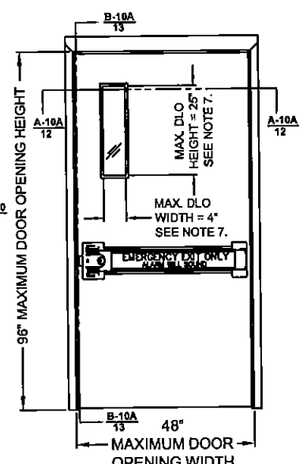

CONFIG.	DESIGN PRESSURE RATING, PSF	
	WHERE WATER INFILTRATION REQUIREMENT IS NEEDED	WHERE WATER INFILTRATION REQUIREMENT IS NOT NEEDED
10A	±55	±55

MORTISE LOCKSET WITH OR WITHOUT DEADBOLT

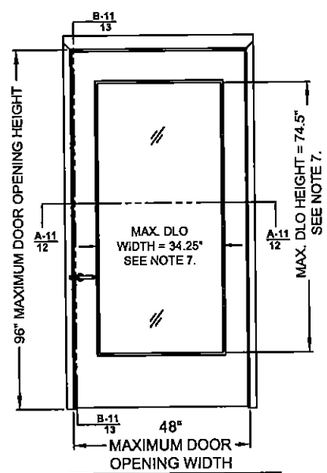

CONFIG.	DESIGN PRESSURE RATING, PSF	
	WHERE WATER INFILTRATION REQUIREMENT IS NEEDED	WHERE WATER INFILTRATION REQUIREMENT IS NOT NEEDED
11	±50	±50

CYLINDRICAL LOCKSET 1/2" MIN. THROW LATCH

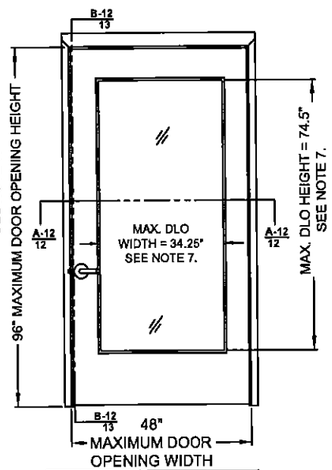

CONFIG.	DESIGN PRESSURE RATING, PSF	
	WHERE WATER INFILTRATION REQUIREMENT IS NEEDED	WHERE WATER INFILTRATION REQUIREMENT IS NOT NEEDED
12	±50	±50

REVISIONS

LTR	DESCRIPTION			DATE	APPROVED
A	APPROVAL	DWG	YMF	05/20/07	
C	REVISED	DWG	RAP	12/12/07	
D	REVISED	DWG	YMF	07/29/08	
E	REVISED	PER_MDBCCO	YMF	01/30/09	
F	REVISED	PER_MDBCCO	YMF	02/04/09	
G	REVISED	DWG	YMF	01/04/10	
H	REVISED	DWG	YMF	04/09/10	
J	REVISED	NAME	JPD	11/01/13	
K	REVISED	DWG	JPD	02/01/15	
L	REVISED	DWG	JPD	05/05/15	

PROFESSIONAL ENGINEER ★ GORDON L. THOMAS ★ No. 46718 ★ STATE OF FLORIDA
Gordon Thomas, P.E. Date
3759 Blossom Court
Mason, OH 45040
Florida # 46718

COMPLIANCE STATEMENT :

1. THESE PRODUCTS HAVE BEEN TESTED TO HVHZ PROTOCOLS TAS201, 202 7 203-94 AND COMPLY WITH THE CURRENT FLORIDA BUILDING CODE.

NOTES:

1. INTERIOR VIEWS ARE SHOWN FOR ALL ELEVATIONS OF OUTSWING DOOR
2. SEE TABLE 1 ON SHEET 2 FOR GLAZING SIZE & TYPE, HARDWARE APPLICATIONS AND LIMITATIONS
3. SEE SHEET 3 FOR HINGE REQUIREMENTS
4. SEE SHEET 4 FOR ANCHORING TYPES AND LIMITATIONS AND SHEET 5 FOR SILL INSTALLATION
5. SEE SHEET 5 FOR WEATHERSTRIPPING INSTALLATION DETAILS AND LIMITATIONS
6. SEE SHEET 8 FOR GLAZING OPTIONS AND DETAILS
7. DLO - DAYLIGHT OPENING SIZE, SAME AS EXPOSED GLASS. SEE SHEETS 1, 2 AND 7 FOR LIMITATIONS

PRODUCT REVISED
as complying with the Florida Building Code
Acceptance No 15-0826.22
Expiration Date MAY 8, 2017
Shaq L. Chand
Product Control

BEND RADIUS

THIRD ANGLE PROJECTION

DRAWN YMF	DATE 05/20/07
CHECKED	
APPROVED	
ENG. APPVL JPD	11/15/07

SCHLAGE LOCK COMPANY, LLC
6810 HILLSDALE COURT
INDIANAPOLIS, IN 46250

MANUFACTURING FACILITY:
STEELCRAFT
9017 BLUE ASH ROAD
CINCINNATI, OH 45242

TITLE: STEELCRAFT H SERIES SINGLE OUTSWING GLAZED COMMERCIAL STEEL DOORS WITH AND WITHOUT PANIC EXIT DEVICES

GLASS OUTSWING DOORS AND HARDWARE CONFIGURATIONS
COMMERCIAL DOOR OPENING SINGLE GLASS DOORS.

SIZE	FLAT	DWG NO. IRGS07	REV L
SCALE: NTS	AUTOCAD		SHEET 1 of 15

Door Configuration	Maximum Design Pressure, PSF		Maximum Door Opening Size, in.		Maximum DLO Size, in. (NOTE 3)		Locking Hardware Description				Comments
	Positive	Negative	Width	Height	Width	Height	Hardware Family	Model/Series	Strike Models	Brand	
1	75	75	36	84	24	64	Mortise Lock	L/LV9400/AD MD	10-072	Schlage	Function with deadbolt, 3/4" min. throw latch & 1" min. throw bolt
								L/LV9000/AD MS			Function w/o deadbolt, 3/4" min. throw latch
								M	ANSI	Falcon	Function with or w/o deadbolt, 3/4" min. throw latch & 1" min. throw bolt (if applicable)
2	75	75	36	84	24	64	Cylindrical Lock	D/ND/AD CYL	10-025	Schlage	1/2" min throw latch
								T	ANSI	Falcon	1/2" min throw latch
3	60	60	36	84	24	64	Surface Vertical Rod Exit Device	98/9927(F)	299-F,499-F Top, 304L,248L4 Bottom	Von Duprin	
								(F)25-V	3788 Top, 2130 Bottom	Falcon	
4	60	60	36	84	24	64	Concealed Vertical Rod Exit Device	98/9947-F	338 Top, 385A Bottom	Von Duprin	
								33/3547A -F	338 Top, 385A Bottom	Von Duprin	
								F-25-C	4188 Top, 2130 Bottom	Falcon	
5	50	50	48	96	34.25	74.5	Three-Point Latching Device	98/9957(F)	299-F,499-F Top/Middle, 304L,248L4 Bottom	Von Duprin	
6	60	60	36	84	24	64	Three-Point Latching Device	98/9957(F)	299-F,499-F Top/Middle, 304L,248L4 Bottom	Von Duprin	
7	60	60	36	84	24	64	Rim Exit Device	98/99(F)	299-F,499-F	Von Duprin	
								88-F	268	Von Duprin	
8	50	50	48	96	34.25	74.5	Rim Exit Device	98/99(F)	299-F,499-F	Von Duprin	
								88-F	268	Von Duprin	
9	75/100 SEE NOTE 2.	75/100 SEE NOTE 2.	48	96	12	12	Rim Exit Device	XP98/99(F)	909/954	Von Duprin	
9A					3 4 5	33 25 20					
10	55	55	48	96	12	12	Exit Alarm Lock	2670 Guard-X	267	Von Duprin	
10A					3 4 5	33 25 20					
11	50	50	48	96	34.25	74.5	Mortise Lock	L/LV9400/AD MD	10-072	Schlage	Function with deadbolt, 3/4" min. throw latch & 1" min. throw bolt
								L/LV9000/AD MS			Function w/o deadbolt, 3/4" min. throw latch
								M	ANSI	Falcon	Function with or w/o deadbolt, 3/4" min. throw latch & 1" min. throw bolt (if applicable)
12	50	50	48	96	34.25	74.5	Cylindrical Lock	D/ND/AD CYL	10-025	Schlage	1/2" min throw latch
								T	ANSI	FALCON	1/2" min throw latch

TABLE 1.

NOTES:
1. SEE SHEETS 9, 10 & 11 FOR LOCKING HARDWARE.
2. DOOR CONFIGURATIONS 9 AND 9A ARE RATED FOR MAXIMUM DESIGN PRESSURE UP TO +75 PSF WHEN WATER INFILTRATION REQUIREMENT IS NEEDED, AND ±100 PSF WHEN WATER INFILTRATION REQUIREMENT IS NOT NEEDED.
3. DLO - DAYLIGHT OPENING, SAME AS EXPOSED GLASS. SEE SHEETS 1, 2, 7 & 8 FOR GLAZING TYPES, DETAILS AND LIMITATIONS.

REVISIONS

LTR	DESCRIPTION			DATE	APPROVED
A	APPROVAL	DWG	YMF	05/20/07	
B	REVISED	DWG	RAP	11/26/07	
C	REVISED	DWG	RAP	12/12/07	
D	REVISED	DWG	YMF	07/29/08	
E	REVISED	PER_MDBCCD	YMF	01/30/09	
F	REVISED	PER_MDBCCD	YMF	02/04/09	
G	REVISED	PER_MFR	YMF	05/18/09	
H	REVISED	PER_MFR	YMF	04/09/10	
J	REVISED	NAME	JPD	11/01/13	
K	REVISED	DWG	JPD	02/01/15	

PRODUCT REVISED
as complying with the Florida Building Code
Acceptance No. 15-0826.22
Expiration Date 5/5/17
By: [signature]
Miami-Dade Product Control

PROFESSIONAL ENGINEER
GORDON D. THOMAS
STATE OF FLORIDA
No. 46713
LICENSED
Gordon Thomas, P.E.
3759 Blossom Court
Mason, OH 45040
Florida # 46713
Date 8/11/15

BEND RADIUS

THIRD ANGLE PROJECTION

DRAWN YMF	DATE 05/20/07
CHECKED	
APPROVED	
ENG. APPVL JPD	11/15/07

SCHLAGE LOCK COMPANY, LLC
6810 HILLSDALE COURT
INDIANAPOLIS, IN 46250

MANUFACTURING FACILITY:
STEELCRAFT
9017 BLUE ASH ROAD
CINCINNATI, OH 45242

TITLE: STEELCRAFT H SERIES SINGLE OUTSWING GLAZED COMMERCIAL STEEL DOORS WITH AND WITHOUT PANIC EXIT DEVICES

GLASS OUTSWING DOORS AND HARDWARE CONFIGURATIONS
COMMERCIAL DOOR OPENING SINGLE GLASS DOORS.

SIZE	FLAT	DWG NO.	REV
		IRGS07	K
SCALE: NTS	AUTOCAD		SHEET 2 of 15

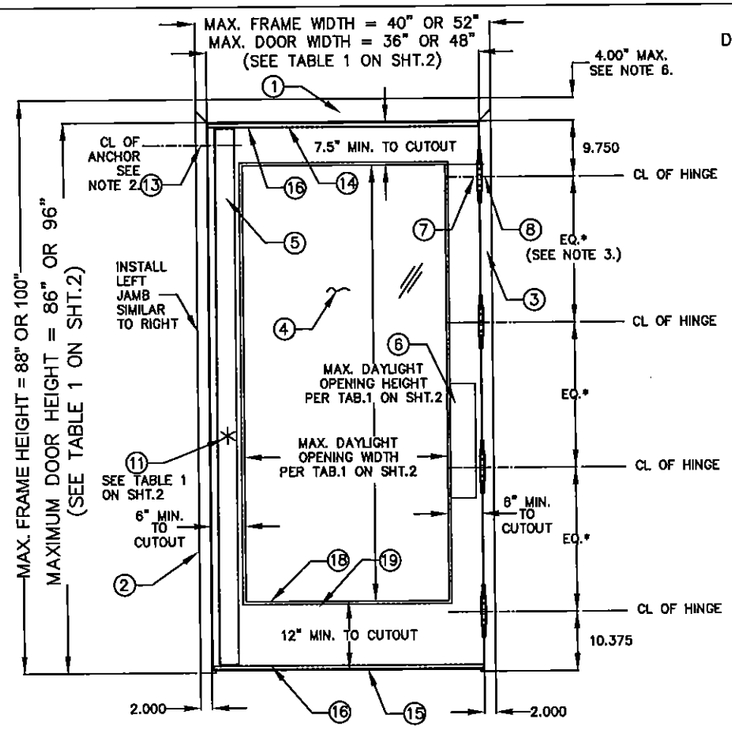

OUTSWING SINGLE GLASS DOOR
(EXERIOR VIEW)

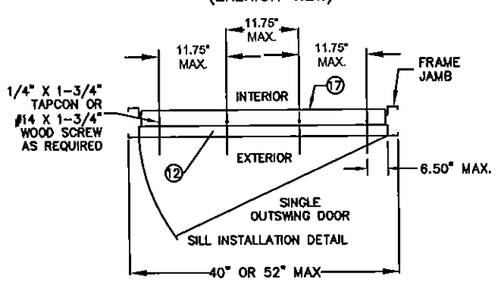

⑦ 7 GA. DOOR HINGE REINFORCEMENT

⑧ 7 GA. FRAME HINGE REINFORCEMENT

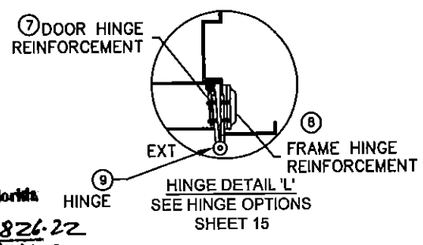

HINGE DETAIL 'L'
SEE HINGE OPTIONS
SHEET 15

PRODUCT REVISED
as complying with the Florida Building Code
Acceptance No. 15-0826.22
Expiration Date 5/5/17
By [signature]
Miami Dade Product Control

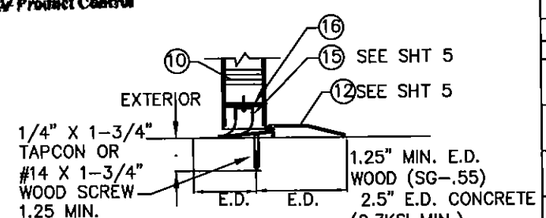

SILL DETAIL (SIDEVIEW)
WOOD OR CONCRETE SILL
E.D.-EDGE DISTANCE

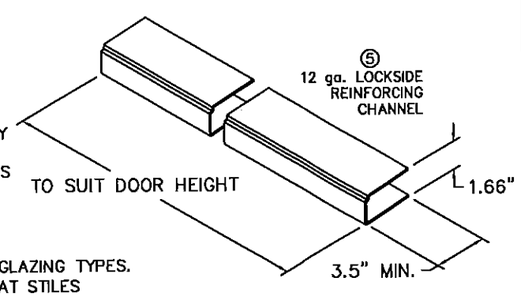

NOTES:

1. ONE ROW OF PS074 WEATHERSTRIPPING PER JAMB AND HEAD. INSTALL PER SHT.5
2. ANCHOR REQUIREMENTS:
   SEE SHEET 4 FOR APPROVED ANCHORS AND INSTALLATION.
3. HINGE REQUIREMENTS: 4.5" STD WT. MIN.
   FOR DOOR OPENING UP TO 90" HIGH – MIN (3) HINGES
   FOR DOOR OPENING OVER 90" – 96" HIGH – MIN (4) HINGES
   STD LOCATIONS: 9.75" FROM RABBET IN HEAD TO CL OF TOP HINGE
   10.38" FROM FLOOR TO CL OF BOTTOM HINGE, EQUALLY SPACED
   IN BETWEEN. HINGE LOCATIONS MAY VARY, MAX SPACING DO NOT EXCEED 35.5"
   APPROVED CONTINUOUS HINGE MODELS: IVES 112 HD, 224HD, 600, 700, 700CS, MARKAR FM-300, HG-305, STANLEY 661HD, HAGER 780-224HD, 790-900, SELECT SL11HD, ABH A500, A240HD.
4. SEE SHEET 2 & 3 FOR AVAILABLE STANDARD OPENING SIZES AND SPECIFICATIONS.
5. HARDWARE INSTALLATION AS PER MANUFACTURER'S INSTRUCTIONS.
6. 4" FACE IS AVAILABLE FOR FRAMES.
7. APPLY CAULK AS NEEDED.
8. WEATHERSTRIPPING, SEE SHEET #5.
9. SEE SHEET 12 FOR HORIZONTAL CROSS-SECTIONS, SEE SHEET 13 FOR VERTICAL CROSS-SECTIONS.
10. INSTALL REINFORCEMENT CHANNELS AROUND EACH LITE-CUTOUT.
11. ELECTRICAL INSTALLATION AND FIRE RATINGS ARE UNDER SEPARATE APPROVAL AND MUST BE REVIEWED BY CORRESPONDING AUTHORITY.
12. OPTIONAL POWER TRANSFERS, AND/OR "SIGNAL SWITCH" MAY BE USED AS ALLOWED BY CODE AND IT DOES NOT EFFECT THE MECHANICAL PROPERTIES OF EXIT DEVICE AND/OR INHIBIT EGRESS. TO BE REVIEWED BY BUILDING OFFICIAL.
13. ITEMS 21 THROUGH 26 REQUIRED ONLY IF WATER INFILTRATION IS NEEDED.
14. SILL SHALL BE ANCHORED PER TOP DOOR VIEW ON THIS SHEET.
15. DAYLIGHT OPENING (DLO) IS THE SAME AS EXPOSED GLASS. SEE SHEETS 1, 2 AND 7 FOR LIMITATIONS & GLAZING TYPES.
16. WHEN USING CONTINUOUS HINGE THE MINIMUM DISTANCE FROM DOOR EDGE TO EXPOSED GLASS IS 6-1/4" AT STILES AND 7-1/2" AT MIDRAILS.

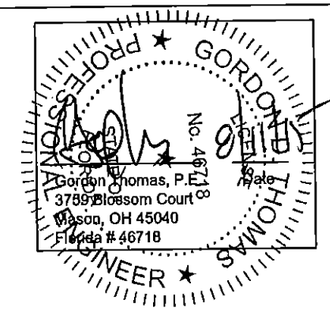

Gordon Thomas, P.E.
3759 Blossom Court
Mason, OH 45040
Florida # 46718

REVISIONS

LTR	DESCRIPTION			DATE	APPROVED
A	APPROVAL	DWG.	YMF	05/20/07	
E	REVISED	PER_MDBCCO	YMF	01/30/09	
F	REVISED	PER_MDBCCO	YMF	02/04/09	
G	REVISED	DWG	YMF	01/04/10	
H	REVISED	DWG	YMF	04/09/10	
J	REVISED	NAME	JPD	11/01/13	
K	REVISED	DWG	JPD	02/01/15	
L	REVISED	DWG	JPD	05/05/15	

TABLE 2.

ITEM	QUANTITY	DESCRIPTION	MATERIAL	SIZE, MAX.
1	1	HEAD SEE SHT 6 ASTM A366	.053" MIN. STL	MAX. 52" — SEE ELEVATION ON SHT.1
2	1	STRIKE JAMB SEE SHT. 6 ASTM A366	.053" MIN.STL	MAX. 100" — SEE ELEVATION ON SHT.1
3	1	HINGE JAMB SEE SHT 6 ASTM A366	.053" MIN. STL	MAX. 100" — SEE ELEVATION ON SHT.1
4	1	LEXAN BY SABIC INNOVATIVE PLASTICS	.25" OR .50"	35.406" X 75.656" MAX
		LAMINATED GLASS WITH SENTRYGLAS INTERLAYER	.562" TYP.	
		SUPERLITE II-XL BY SAFTI WITH SENTRYGLAS INTERLAYER	1.06" TYP.	
5	1	LOCK SIDE REINFORCEMENT CHANNEL	.093" MIN. STL	3.5 X 93.44 MAX,
6	1	HINGE SIDE PANIC REINFORCEMENT	.067" MIN. STL	MAX. 20"
7	NOTE 3.	HINGE REINFORCEMENT DOOR ASTM A621	.167" MIN. STL.	1.28" X 9.19"
8	NOTE 3.	HINGE REINFORCEMENT FRAME ASTM A621	.167" MIN. STL.	1.23" X 9.187" MAX.
9	NOTE 3.	4.5" X 4.5" BUTT HINGES (SEE SHT 15)	.134 MIN.	(8) #12-24 MS PER HINGE
		OPTIONAL CONTINUOUS HINGE (SEE SHT 15)	.075" MIN. STL/.12 ALUM	MAX. 95"
10	1	CORE MATERIAL (SHEET 14): D) HONEYCOMB C) STEEL STIFFENED A & F) POLYSTYRENE B & F)POLYURETHANE/POLYISOCYANURATE E) MINERAL BOARD TEMPERATURE RISE CORE		
11	1	LOCKING HARDWARE – SEE SHEET 2 TABLE 1.		
12	1	THRESHOLD SILL W/BUMPER GASKET		5.50"X0.5"X48"MAX.
		1) ZERO 566A — SEE TAB. 3&4, SHT.5	.125" ALUM. 6063 T5	
		2) NAT'L GUARD 950A — SEE TAB. 3&4, SHT.5	.078" ALUM. 6063 T5	
13	NOTE 2.	JAMB ANCHOR ASTM A924	SEE SHEET 4	
14	3	PS074 WEATHER STRIPPING	TPE	MAX. 24'
15	1	FAS-SEAL DOOR SWEEP	TPE	MAX. 48"
16	2	END CHANNEL ASTM A924 (14 GA – INVERTED)		.69" X 1.66" X 48" MAX.
17	AS NEEDED	BUTYL RUBBER OR 100% SILICONE		
18	AS NEEDED	GLAZING HOLDING DOOR TRIM		34.25" X 74.5" EXPOSED GLASS MAX.
		1) DEZIGNER TRIM	.032" MIN. STL	
		2) STEEL OVERLAPPING TRIM		
		3) STEEL OVERLAPPING TRIM		
		4) HIGH SECURITY VISION FRAME — SG-10 BY ANEMOSTAT	.093"(12GA) MIN. STL.	
19	NOTE 10.	CUTOUT REINFORCEMENT CHANNEL (18 GA)	.047" MIN. STL	0.5" X 1.56"X35.5"X 75.5" MAX.
20	1	DOOR SLAB (16 OR 14 GA)	SEE SHEET 4	4' X 8' MAX.
21	1	BY ZERO INT'L — DOOR SEAL No.8144S/FS (SEE NOTE 13)	TPE	MAX. 20'
		BY STEELCRAFT — DOOR SEAL PS074		
22	2	BY ZERO INT'L — DOOR SWEEP No.539 (SEE NOTE 13)	TPE	MAX. 86" OR 96"
		BY NGP — DOOR SWEEP No.202N		
23	1	BY ZERO INT'L — DOOR SWEEP No.139 (SEE NOTE 13)	SEE SHEET 5	MAX. 36" OR 48"
		BY NGP — OMIT		
24	1	BY ZERO INT'L — ADJUSTABLE STOP No.475 (SEE NOTE 13)	TPE	MAX. 36" OR 48"
		BY NGP — ADJUSTABLE STOP No.170N		
25	1	BY ZERO INT'L — RAIN DRIP No.11 (SEE NOTE 13)	SEE SHEET 5	MAX. 36" OR 48"
		BY NGP — DRIP CAP No.16A		
26	1	TOP CAP GALV. A60 ASTM A924	.020" MIN. STL	0.5" X 1.76" X 36" OR 48"

BEND RADIUS

THIRD ANGLE PROJECTION

DRAWN	YMF	DATE 05/20/07
CHECKED		
APPROVED		
ENG. APPVL	JPD	11/15/07

SCHLAGE LOCK COMPANY, LLC
6810 HILLSDALE COURT
INDIANAPOLIS, IN 46250

MANUFACTURING FACILITY:
STEELCRAFT
9017 BLUE ASH ROAD
CINCINNATI, OH 45242

TITLE: STEELCRAFT H SERIES SINGLE OUTSWING GLAZED COMMERCIAL STEEL DOORS WITH AND WITHOUT PANIC EXIT DEVICES

H-SERIES SINGLE GLASS DOORS (OUTSWING)

SIZE	FLAT	DWG NO.	REV
		IRGS07	L

SCALE: NTS | AUTOCAD | SHEET 3 of 15

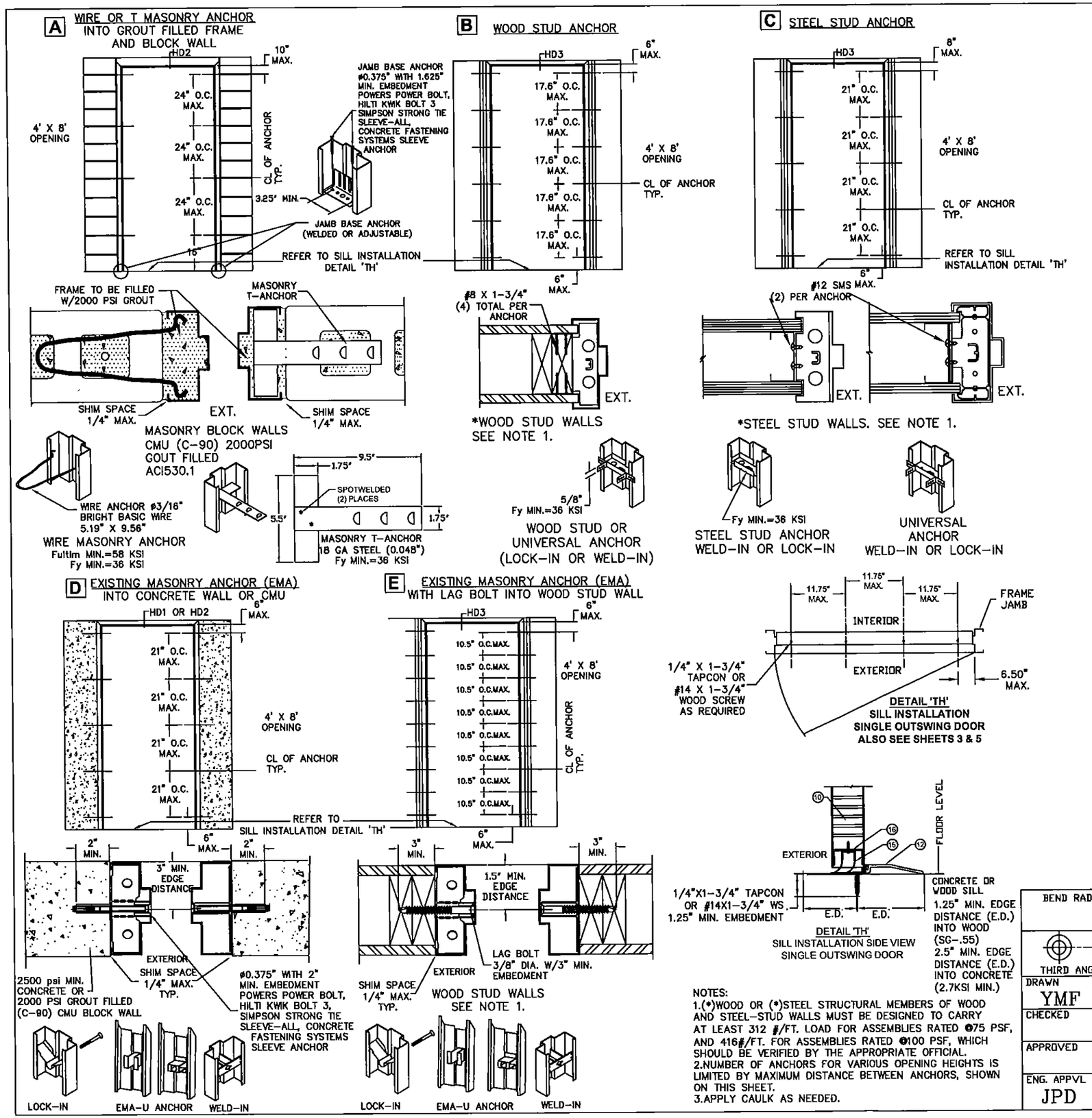

NOTES:
1.(*)WOOD OR (*)STEEL STRUCTURAL MEMBERS OF WOOD AND STEEL-STUD WALLS MUST BE DESIGNED TO CARRY AT LEAST 312 #/FT. LOAD FOR ASSEMBLIES RATED @75 PSF, AND 416#/FT. FOR ASSEMBLIES RATED @100 PSF, WHICH SHOULD BE VERIFIED BY THE APPROPRIATE OFFICIAL.
2.NUMBER OF ANCHORS FOR VARIOUS OPENING HEIGHTS IS LIMITED BY MAXIMUM DISTANCE BETWEEN ANCHORS, SHOWN ON THIS SHEET.
3.APPLY CAULK AS NEEDED.

PROFESSIONAL ENGINEER — GORDON THOMAS — STATE OF FLORIDA
TJ Gordon Thomas, P.E. — Date
3753 Blossom Court
Mason, OH 45040
Florida # 46718

REVISIONS					
LTR	DESCRIPTION			DATE	APPROVED
D	REVISED	DWG	YMF	08/01/08	
E	REVISED	DWG	YMF	01/30/09	
F	REVISED	DWG	YMF	01/30/09	
G	REVISED	DWG	YMF	01/04/10	
H	REVISED	DWG	YMF	04/09/10	
J	REVISED	NAME	JPD	11/01/13	
K	REVISED	DWG	JPD	02/01/15	
L	REVISED	DWG	JPD	05/05/15	

PRODUCT REVISED as complying with the Florida Building Code
Acceptance No. 15-0526.22
Expiration Date 5/5/17
Manuf. Date Product Control

BEND RADIUS
THIRD ANGLE PROJECTION

DRAWN	YMF	DATE 05/20/07
CHECKED		
APPROVED		
ENG. APPVL	JPD	10/11/07

SCHLAGE LOCK COMPANY, LLC
6810 HILLSDALE COURT
INDIANAPOLIS, IN 46250

MANUFACRURING FACILITY:
STEELCRAFT
9017 BLUE ASH ROAD
CINCINNATI, OH 45242

TITLE: STEELCRAFT H SERIES SINGLE OUTSWING GLAZED COMMERCIAL STEEL DOORS WITH AND WITHOUT PANIC EXIT DEVICES

FRAME ANCHOR DETAILS & INSTALLATION CONDITIONS.

SIZE	FLAT	DWG NO.	REV
		IRGS07	L
SCALE: NTS	AUTOCAD		SHEET 4 of 15

TABLE 3.

PERIMETER SEAL HARDWARE WHEN WATER INFILTRATION REQUIREMENT DOES APPLY					
ITEM NUMBER SHT 3. TABLE 2	DESCRIPTION	ALLOWABLE DESIGN PRESSURE, PSF, UP TO*	MODEL No./ MANUFACTURER	PART DETAIL	INSTALL PER DETAIL
12	THRESHOLD	+75	566/ZERO INT'L	'T1'	'P1'
			950/NGP	'T2'	'P2'
15	FAS-SEAL SWEEP	+75	STEELCRAFT	'S'	'P1' & 'P2'
21 OR 14	SELF ADHESIVE DOOR SEAL	+75	8144S/FS/ZERO INT'L	'U'	'M' & 'N'
			PS074/STEELCRAFT	'Q'	
22	DOOR SWEEP	+75	539/ZERO INT'L	'W1'	'N'
			202N/NGP	'W2'	
23	DOOR SWEEP	+75	139/ZERO INT'L	'X'	'P1'
24	ADJUSTABLE STOP	+75	475/ZERO INT'L	'Y1'	'M'
			170N/NGP	'Y2'	
25	RAIN DRIP CAP	+75	11/ZERO INT'L	'Z1'	'P1'
			16A/NGP	'Z2'	'P2'
26	DOOR TOP CAP	+75	STEELCRAFT	'R'	'M'

TABLE 4.

PERIMETER SEAL HARDWARE WHEN WATER INFILTRATION REQUIREMENT DOES NOT APPLY				
ITEM NUMBER SHT 3. TABLE 2	DESCRIPTION	MODEL No. MANUFACTURER	PART DETAIL	INSTALL PER DETAIL
12	THRESHOLD	566 BY ZERO INT'L	'T1'	'K'
		950 BY NATIONAL GUARD	'T2'	
15	FAS-SEAL DOOR SWEEP	STEELCRAFT	'S'	'K'
14	PS-074 SELF ADHESIVE WEATHERSTRIPPING	STEELCRAFT	'Q'	'J' & 'L'
26	DOOR TOP CAP	STEELCRAFT	'R'	OPTIONAL

* - SEE ELEVATION SHEETS 1 & 2 FOR DESIGN PRESSURE RATINGS

PROFESSIONAL ENGINEER — GORDON THOMAS — LICENSE — STATE OF OHIO

Gordon Thomas, P.E.
3759 Blossom Court
Mason, OH 45040
Florida # 46718

Date

REVISIONS				
LTR	DESCRIPTION		DATE	APPROVED
A	APPROVAL DWG	YMF	05/20/07	
C	REVISED DWG	RAP	12/10/07	
D	REVISED DWG	YMF	08/01/08	
E	REVISED DWG	YMF	01/30/09	
F	REVISED DWG	YMF	02/04/09	
G	REVISED DWG	YMF	01/04/10	
H	REVISED DWG	YMF	04/09/10	
J	REVISED NAME	JPD	11/01/13	
K	REVISED DWG	JPD	02/01/15	
L	REVISED DWG	JPD	05/05/15	

NOTES:
1. SLOT LOCATIONS MAY VARY WITH DIFFERENT DOOR WIDTH.
2. DOOR SWEEP RIGID SECTION IS MADE OF PRO-FAX #PD-199 POLYPROPYLENE HOMOPOLYMER.
3. DOOR SWEEP FLEXIBLE SECTION IS MADE OF SANTOPRENE #101-73
4. FAS-SEAL DOOR SWEEP (15), AND THRESHOLD (12) ARE REQUIRED FOR ALL INSTALLATIONS.

PART DETAILS

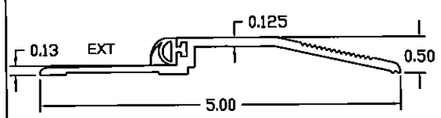

WHEN WATER INFILTRATION REQUIREMENT IS NEEDED - MAX. DP = +75 PSF

DETAIL 'T1'
ZERO INT'L 566 SERIES THRESHOLD APPROVED FOR WATER INFILTRATION REQUIREMENT, SINGLE DOORS

(12)

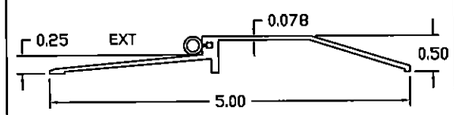

WHEN WATER INFILTRATION REQUIREMENT IS NEEDED - MAX. DP = +50 PSF

DETAIL 'T2'
NATIONAL GUARD 950 SERIES THRESHOLD WITH SILICONE, VINYL OR NEOPRENE BUMPER

(12)

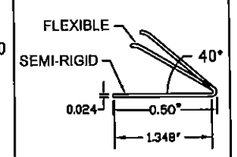

DETAIL 'Q'
PS-074
SELF-ADHESIVE WEATHERSTRIPPING

(14)

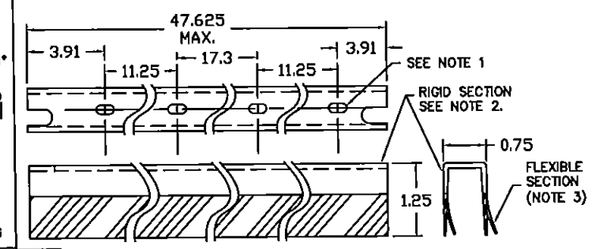

DETAIL 'S'
FAS-SEAL DOOR SWEEP

(15)

ITEMS 21 THROUGH 26 REQUIRED IF WATER INFILTRATION IS NEEDED.

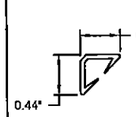

DETAIL 'U'
ZERO 8144S/FS DOOR SEAL

(21)

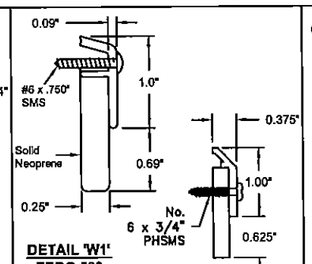

DETAIL 'W1'
ZERO 539 DOOR SWEEP

DETAIL 'W2'
NGP 202 DOOR SEAL

(22)

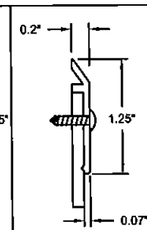

DETAIL 'X'
ZERO 139 DOOR SWEEP

(23)

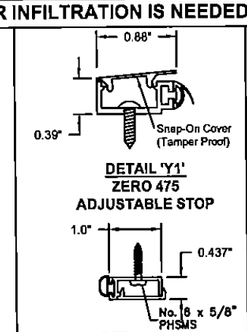

DETAIL 'Y1'
ZERO 475 ADJUSTABLE STOP

DETAIL 'Y2'
NGP 170N ADJUSTABLE STOP

(24)

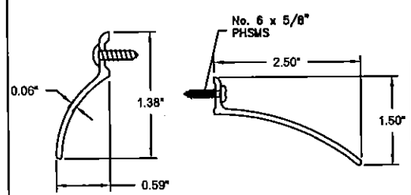

DETAIL 'Z1'
ZERO 11 RAIN DRIP CAP

DETAIL 'Z2'
NGP 16 RAIN DRIP CAP

(25)

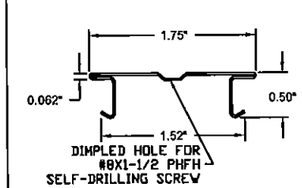

DETAIL 'R'
24 GA TOP CAP

(26)

PERIMETER SEAL INSTALLATION DETAILS WHEN WATER INFILTRATION REQUIREMENTS DO NOT APPLY

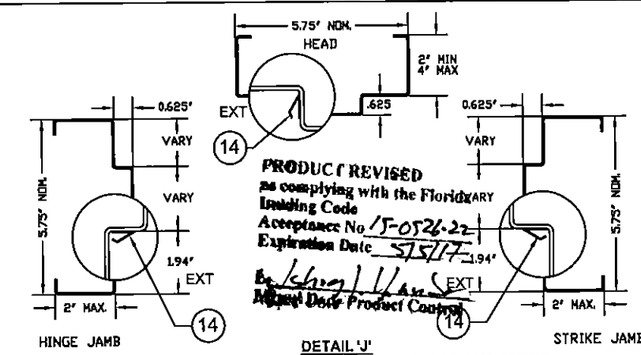

PRODUCT REVISED
as complying with the Florida Building Code
Acceptance No. 1-0526.22
Expiration Date 5/5/17
By Johnny Hernandez
Miami-Dade Product Control

DETAIL 'J'
PERIMETER DOOR SEAL INSTALLATION IN HEAD AND JAMBS

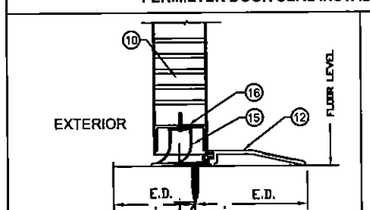

DETAIL 'K'
BOTTOM OF DOOR WEATHERSTRIPPING AND SILL INSTALLATION

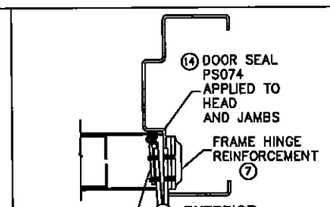

HINGE DETAIL 'L'
HINGE SIDE WEATHERSTRIPPING INSTALLATION

PERIMETER SEAL INSTALLATION DETAILS WHEN WATER INFILTRATION REQUIREMENTS APPLY (SEE SHEETS 1 &2)

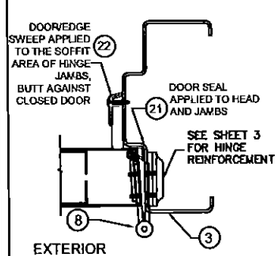

DETAIL 'N1'
HINGE JAMB SWEEP INSTALLATIION

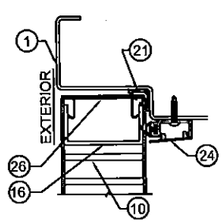

DETAIL 'M'
TOP OF DOOR/HEAD WEATHERSTRIPPING

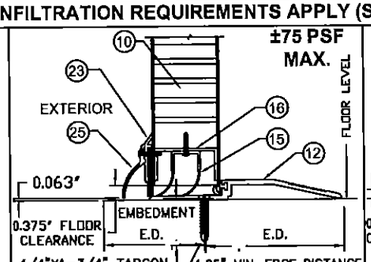

DETAIL 'P1'
BOTTOM OF DOOR ZERO WEATHERSTRIPPING AND SILL INSTALLATION

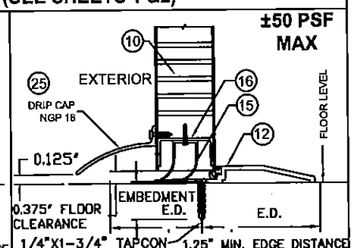

DETAIL 'P2'
BOTTOM OF DOOR NGP WEATHERSTRIPPING AND SILL INSTALLATION

BEND RADIUS

THIRD ANGLE PROJECTION

DRAWN	YMF	DATE 05/20/07
CHECKED		
APPROVED		
ENG. APPVL	JPD	10/11/07

SCHLAGE LOCK COMPANY, LLC
6810 HILLSDALE COURT
INDIANAPOLIS, IN 46250

MANUFACTURING FACILTITY:
STEELCRAFT
9017 BLUE ASH ROAD
CINCINNATI, OH 45242

TITLE: STEELCRAFT H SERIES SINGLE OUTSWING GLAZED COMMERCIAL STEEL DOORS WITH AND WITHOUT PANIC EXIT DEVICES

SINGLE GLAZED DOOR PERIMETER SEAL HARDWARE.

SIZE	FLAT	DWG NO.	IRGS07	REV L
SCALE: NTS	AUTOCAD			SHEET 5 of 15

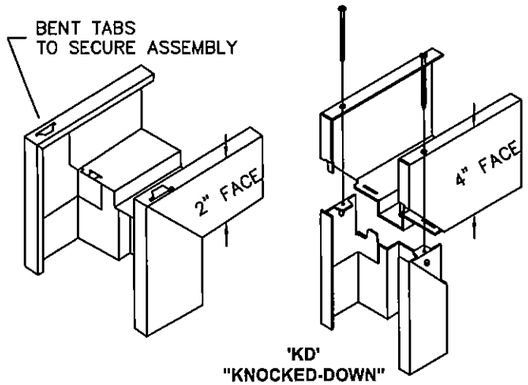

'KD'
"KNOCKED-DOWN"
ASSEMBLY

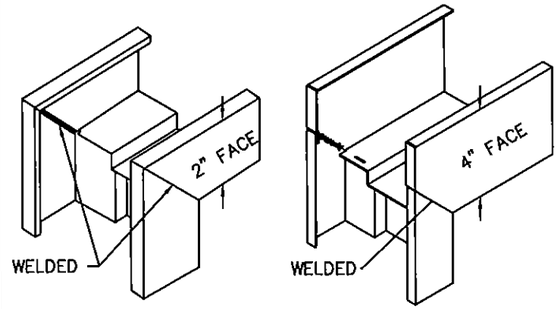

'SUA'
SET-UP AND ARC-WELDED
ASSEMBLY

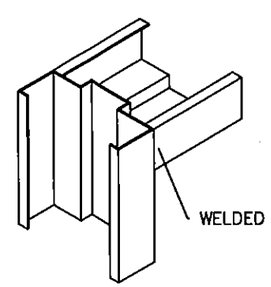

HEAD NOTCHED
AND BUTTED BETWEEN JAMBS

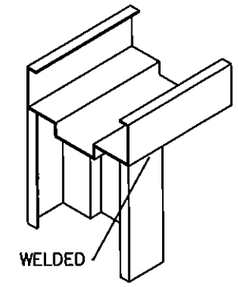

HEAD SITS ON TOP
OF NOTCHED JAMBS

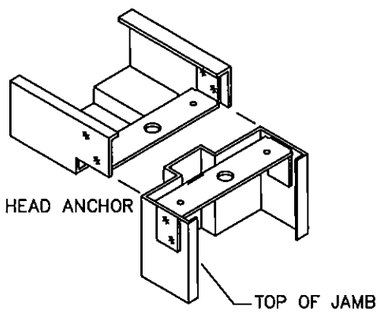

HEAD NOTCHED
AND BOLTED ON TOP OF JAMBS

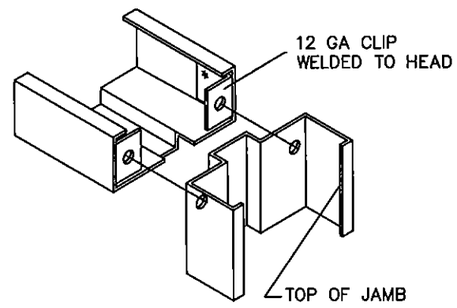

HEAD NOTCHED
AND BOLTED BETWEEN JAMBS

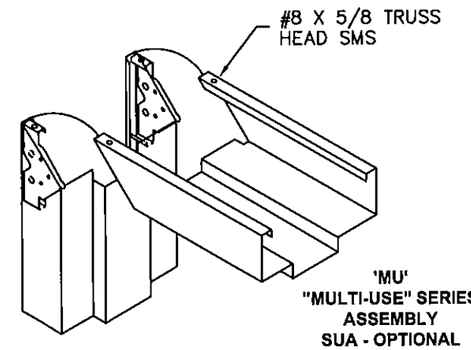

'MU'
"MULTI-USE" SERIES
ASSEMBLY
SUA - OPTIONAL

TYPICAL FRAME PROFILE
DOUBLE RABBET

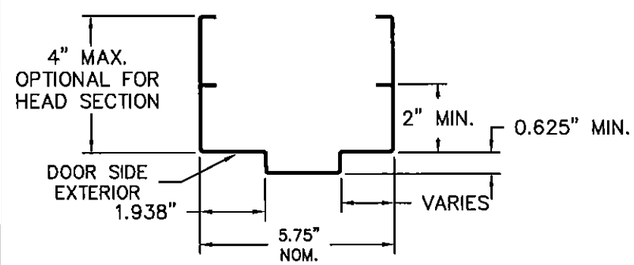

OPTIONAL FRAME PROFILE
SINGLE RABBET

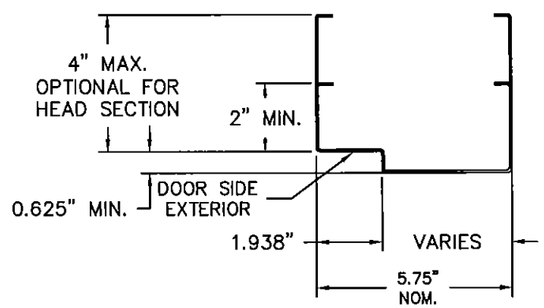

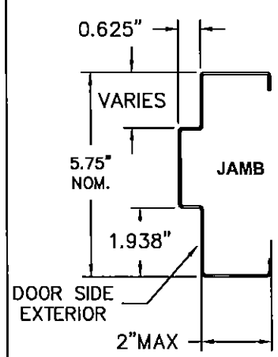

TYPICAL FRAME PROFILE
DOUBLE RABBET

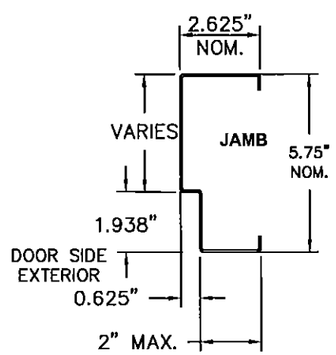

OPTIONAL FRAME PROFILE
SINGLE RABBET

TABLE 7. STEEL MECHANICAL PROPERTIES

MATERIAL	ASTM REF.	YIELD KSI	TENSILE KSI
CRS	A366	MIN. 41.5	MIN. 52.4
HRS	A1011		
GALV: A60	A924		
SS: 304,316	A240	MIN. 41.5	MIN. 73.2

PRODUCT REVISED
as complying with the Florida
Building Code
Acceptance No. 15-0526.22
Expiration Date 5/5/17
By Ishaq I. Chande
Mgr. Dade Product Control

PROFESSIONAL ENGINEER ★ GORDON D. THOMAS ★ LICENSE No. 46718 ★ STATE OF FLORIDA
Date
Gordon Thomas, P.E.
3759 Blossom Court
Mason, OH 45040
Florida # 46718

BEND RADIUS	
THIRD ANGLE PROJECTION	
DRAWN YMF	DATE 05/20/07
CHECKED	
APPROVED	
ENG. APPVL JPD	11/15/07

SCHLAGE LOCK COMPANY, LLC
6810 HILLSDALE COURT
INDIANAPOLIS, IN 46250

MANUFACTURING FACILITY:
STEELCRAFT
9017 BLUE ASH ROAD
CINCINNATI, OH 45242

TITLE: STEELCRAFT H SERIES SINGLE OUTSWING GLAZED COMMERCIAL STEEL DOORS WITH AND WITHOUT PANIC EXIT DEVICES

FRAME PROFILE, CORNER DETAILS AND DOOR FRAME MATERIAL, AND SIZE OPTIONS.

SIZE	FLAT	DWG NO.	REV
		IRGS07	K
SCALE: NTS	AUTOCAD		SHEET 6 of 15

REVISIONS

LTR	DESCRIPTION			DATE	APPROVED
A	APPROVAL	DWG	YMF	05/20/07	
B	REVISED	DWG	RAP	11/26/07	
C	REVISED	DWG	RAP	12/12/07	
D	REVISED	DWG	YMF	08/06/08	
E	REVISED	PER_MDBCCO	YMF	01/30/09	
F	REVISED	PER_MDBCCO	YMF	02/04/09	
G	REVISED	DWG	YMF	01/04/10	
H	REVISED	DWG	YMF	04/09/10	
J	REVISED	NAME	JPD	11/01/13	
K	REVISED	DWG	JPD	02/01/15	

TABLE 5. AVAILABLE STEELCRAFT DOOR CONFIGURATIONS

CORE MATERIAL PER SHT.14	MAXIMUM OPENING SIZE WIDTH | HEIGHT	SKIN MATERIAL DESCR.	SKIN MATERIAL GA./MIN. THK
HONEYCOMB POLYSTYRENE POLYURETHANE (POLYISOCYANURATE) TEMPERATURE RISE STEEL STIFFENED	VARIES SEE SHT 2 TABLE 1	CRS GALV	16/.053" 14/.067"
HONEYCOMB POLYSTYRENE POLYURETHANE	VARIES SEE SHT 2 TABLE 1	STAINLESS STEEL	16/.053"

TABLE 6. AVAILABLE STEELCRAFT FRAME CONFIGURATIONS

FRAME SERIES	JAMB DEPTH	MAXIMUM OPENING SIZE WIDTH | HEIGHT	MATERIAL DESCR.	MATERIAL GA./MIN. THK
F	5.75" NOM.	VARIES SEE SHT 2 TABLE 1	CRS/HRS GALV	16/.053" 14/.067" 12/.099"
			STAINLESS STEEL	16/.053"
MU	5.75" NOM.	VARIES SEE SHT 2 TABLE 1	CRS/HRS GALV	16/.053" 14/.067"

NOTES:

1. DOOR CONSTRUCTION
1.1. NOMINAL DOOR THICKNESS – 1 3/4"
1.2. DOOR SIZE MAY VARY, SUBJECTED TO COMPLIANCE WITH FLORIDA BUILDING CODE AND PRODUCT AVAILABILITY FROM MANUFACTURER (SEE SHEET 2 FOR AVAILABLE HARDWARE)

2. FRAME CONSTRUCTION
2.1. NOMINAL JAMB DEPTH – 5 3/4", STOP HEIGHT – 5/8"
2.2. FRAMES AVAILABLE AS FLUSH (F–SERIES) AND MULT–USE (MU–SERIES) (SEE TABLE 6)

3. FOR DOOR AND FRAME MATERIAL SPECIFICATIONS REFERENCE SEE TABLE 7.

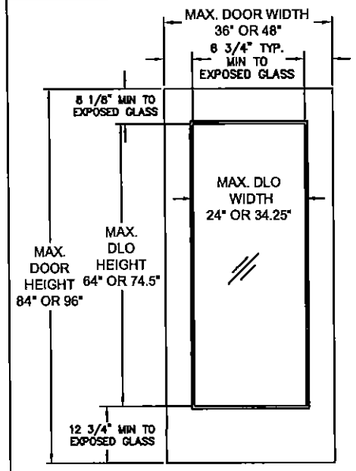

FG-LITE
FULLY GLAZED

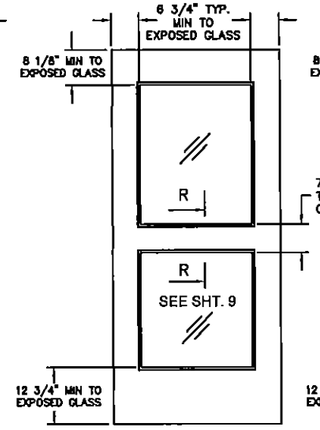

FG2-LITE
HORIZONTAL MID-RAIL

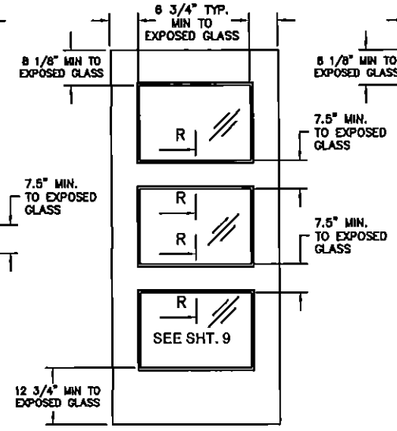

FG3-LITE
2 HORIZONTAL MID-RAILS

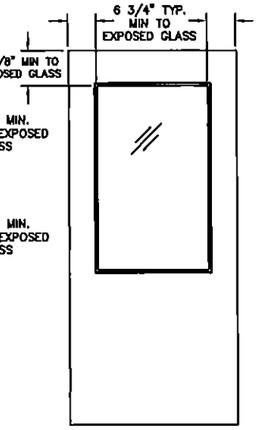

G-LITE
HALF GLASS

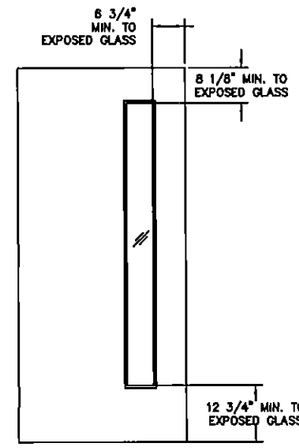

LNL
LONG NARROW LITE

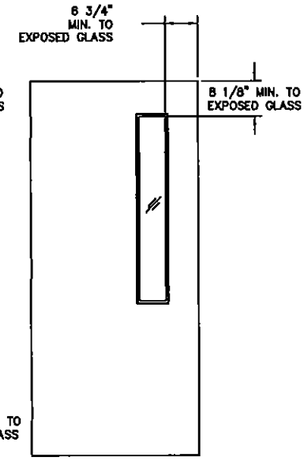

N
NARROW LITE

REVISIONS					
LTR	DESCRIPTION			DATE	APPROVED
A	APPROVAL	DWG	YMF	05/20/07	
B	REVISED	DWG	RAP	11/26/07	
C	REVISED	DWG	RAP	12/12/07	
D	REVISED	DWG	YMF	07/29/08	
E	REVISED	PER_MDBCCO	YMF	01/30/09	
F	REVISED	PER_MDBCCO	YMF	02/04/09	
G	REVISED	DWG	YMF	01/04/10	
H	REVISED	DWG	YMF	04/09/10	
J	REVISED	NAME	JPD	11/01/13	
K	REVISED	DWG	JPD	02/01/15	

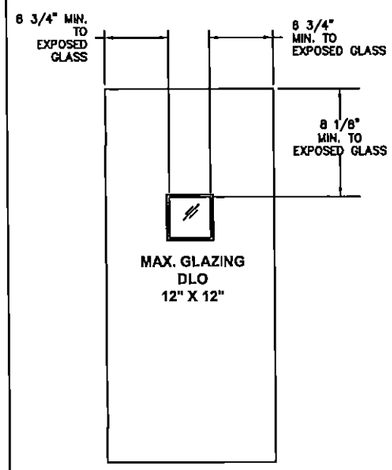

V
VISION LITE

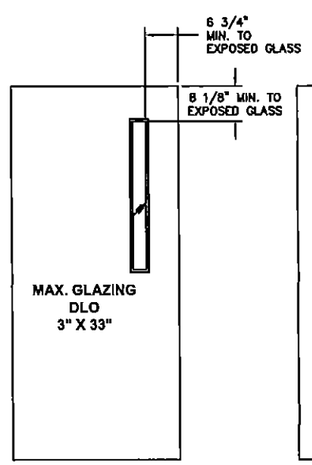

N3

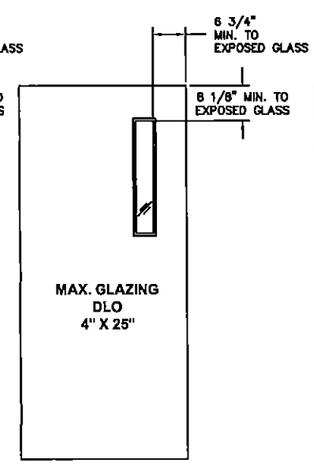

N4

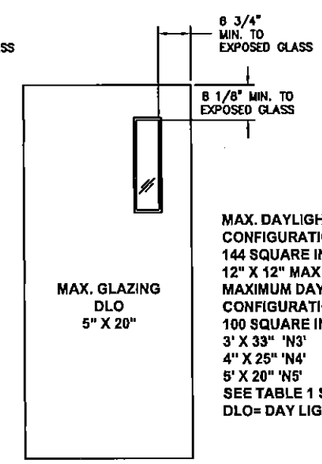

N5

MAX. DAYLIGHT OPENING FOR
CONFIGURATIONS 9 AND 10 IS
144 SQUARE INCHES
12" X 12" MAX. 'V' VISION LITE
MAXIMUM DAYLIGHT OPENING FOR
CONFIGURATIONS 9A AND 10A IS
100 SQUARE INCHES DLO
3' X 33" 'N3'
4" X 25" 'N4'
5' X 20" 'N5'
SEE TABLE 1 SHEET 2
DLO= DAY LIGHT OPENING

PRODUCT REVISED
as complying with the Florida
Building Code
Acceptance No. 15-0526.22
Expiration Date 5/5/17
By Greg L. Lane
Mgr. Dade Product Control

NOTES:
1. DOOR CONSTRUCTION
2. NOMINAL DOOR THICKNESS – 1 3/4"
3. ALL GLASS LITE TYPES SHOWN ON THIS SHEET ARE AVAILABLE FOR ALL DOOR CONFIGURATIONS SHOWN ON SHEET 1 AND TABLE 1 SHEET 2 EXCEPT FOR CONFIGURATIONS 9, 9A, 10 and 10A. SEE NOTE 4
4. DOOR CONFIGURATION 9 and 10 AVAILABLE WITH 'V' VISION LITE AND 9A and 10A ARE AVAILABLE WITH N3, N4 AND N5 TYPE LITES. (SEE TABLE 1 SHEET 2)
5. MAXIMUM GLAZING DLO HEIGHT AND WIDTH AS PER SHEETS 1, 2, AND 7.
6. GLAZING OPENING DLO SIZE WILL CHANGE IN PROPORTION WITH DOOR SIZE.(SEE TABLE 1 SHEET 2 FOR LIMITATIONS)
7. DOOR SIZE MAY VARY, SUBJECTED TO COMPLIANCE WITH FLORIDA BUILDING CODE AND PRODUCT AVAILABILITY FROM MANUFACTURER.
8. GLASS LITES NOT LIMITED TO THOSE SHOWN, PROVIDED DIMENSIONS SHOWN ARE MAINTAINED. SEE TABLE 1 SHEET 2)
9. DOORS WITH MULTIPLE GLASS LITES ARE NOT LIMITED TO THE DESIGNS SHOWN, PROVIDED THE DIMENSIONS SHOWN ARE MAINTAINED.(SEE TABLE 1 SHEET 2 FOR LIMITATIONS)
10. WHEN USING A CONTINUOUS HINGE THE MINIMUM DISTANCE FROM THE EDGE OF THE DOOR TO EXPOSED GLASS IS 6-1/4" AT STILES AND 7-1/2" AT MID RAILS.
11. DLO = DAYLIGHT OPENING (SEE TABLE 1 SHEET 2 FOR LIMITATIONS)

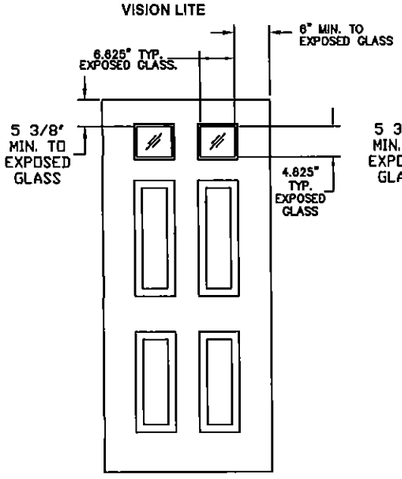

E4 TL

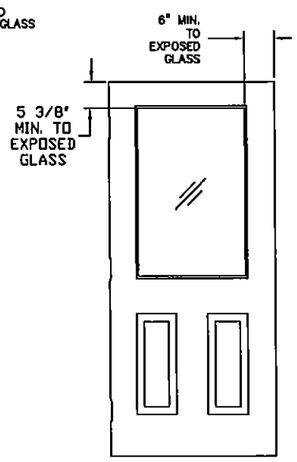

E2 G

EMBOSSED PANEL DOORS

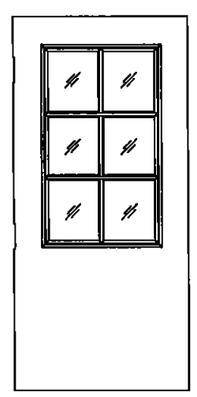

SURFACE APPLIED MUNTINS
(FALSE DIVIDERS)
MUNTIN ARRANGEMENT
MAY VARY

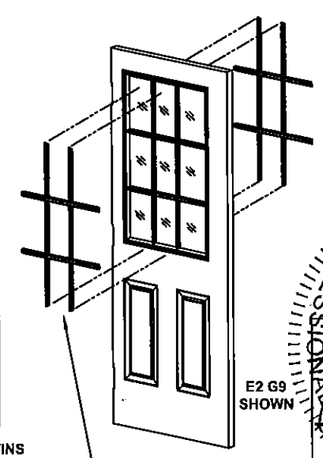

E2 G9
SHOWN

MUNTIN ASSEMBLY
SURFACE MOUNTED
TO THE GLASS

PROFESSIONAL ENGINEER
GORDON D. THOMAS
LICENSE
No. 46718
STATE OF FLORIDA

Gordon D. Thomas, P.E. ★ Date
3759 Blossom Court
Mason, OH 45040
Florida # 46718

BEND RADIUS

THIRD ANGLE PROJECTION

DRAWN	YMF	DATE 05/20/07
CHECKED		
APPROVED		
ENG. APPVL	JPD	11/15/07

SCHLAGE LOCK COMPANY, LLC
6810 HILLSDALE COURT
INDIANAPOLIS, IN 46250

MANUFACTURING FACILITY:
STEELCRAFT
9017 BLUE ASH ROAD
CINCINNATI, OH 45242

TITLE: STEELCRAFT H SERIES SINGLE OUTSWING GLAZED COMMERCIAL STEEL DOORS WITH AND WITHOUT PANIC EXIT DEVICES

GLASS DOOR CONFIGURATIONS.

SIZE	FLAT	DWG NO.	REV
		IRGS07	K
SCALE: NTS	AUTOCAD		SHEET 7 of 15

GLAZING TYPE 1

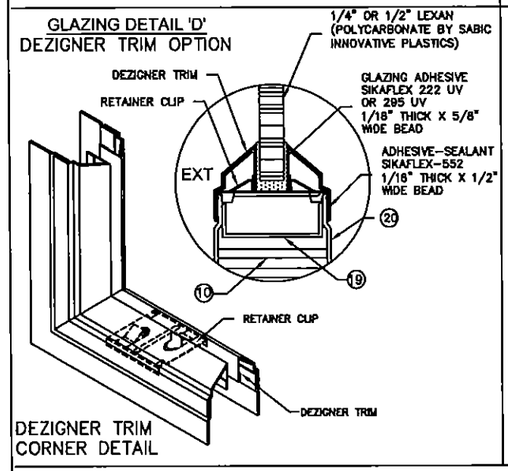

GLAZING TYPE 1

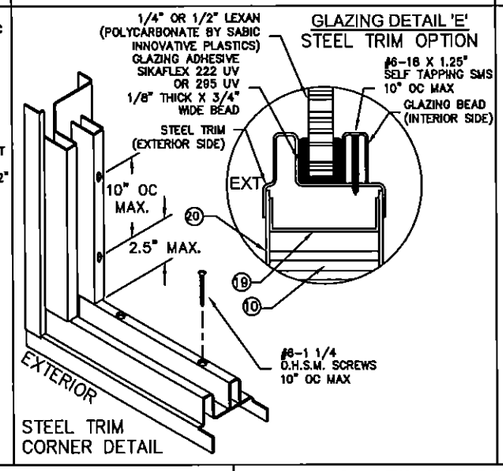

GLAZING TYPE 2

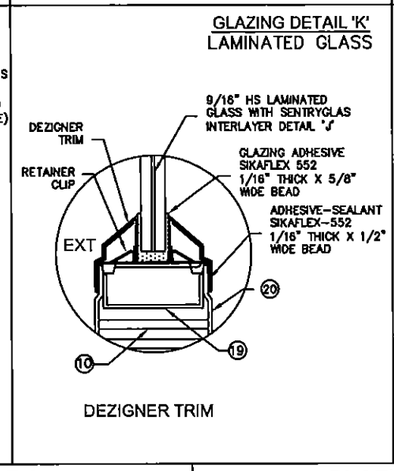

GLAZING TYPE 2

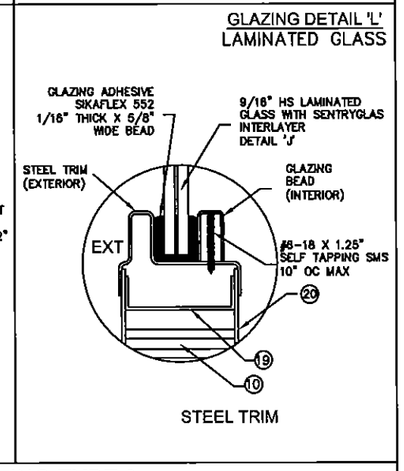

LAMINATED GLASS DETAILS

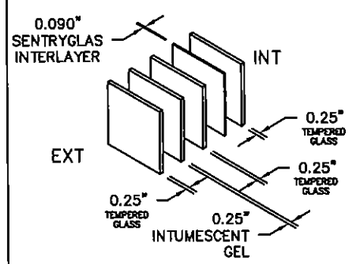

CONSTRUCTION DETAIL 'H'
INTUMESCENT GLASS
1-1/16" SUPERLITE II-XL™
BY SAFTI
WITH SENTRYGLAS INTERLAYER

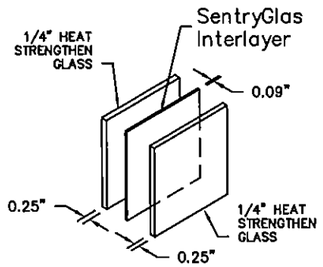

CONSTRUCTION DETAIL 'J'
9/16" HS LAMINATED GLASS WITH
SENTRYGLAS INTERLAYER

GLAZING TYPE 3

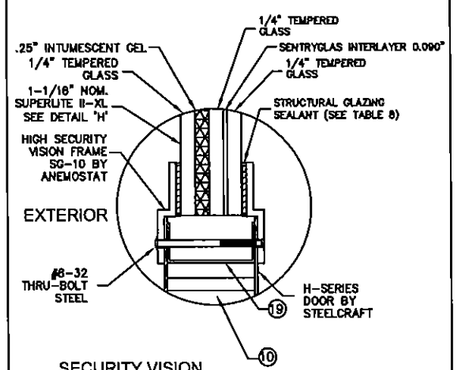

SECURITY VISION
FRAME SG-10 BY ANEMOSTAT
PROFILE SHOWN FOR 1-1/16" GLASS

GLAZING TYPE 3

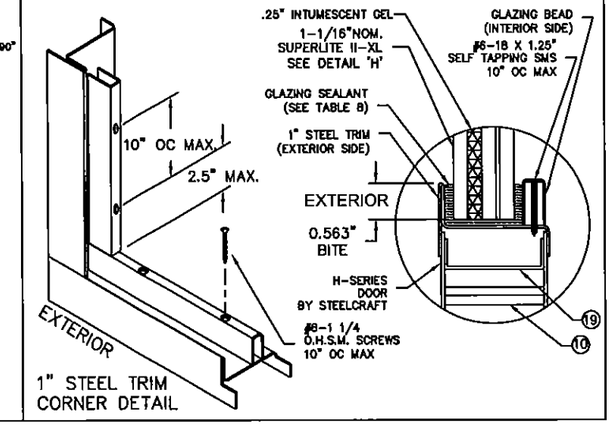

REVISIONS

LTR	DESCRIPTION			DATE	APPROVED
A	APPROVAL	DWG.	YMF	05/20/07	
B	REVISED	DWG.	RAP	11/26/07	
C	REVISED	DWG.	RAP	12/12/07	
D	REVISED	DWG.	YMF	08/06/08	
E	REVISED	PER_MDBCCO	YMF	01/30/09	
F	REVISED	PER_MDBCCO	YMF	02/05/09	
G	REVISED	DWG	YMF	01/04/10	
H	REVISED	DWG	YMF	04/09/10	
J	REVISED	NAME	JPD	11/01/13	
K	REVISED	DWG	JPD	02/01/15	

TABLE 8.

GLAZING TYPES AND METHODS

TYPE	GLAZING MATERIAL	TRIM TYPE	GLAZING SEALANT
1	LEXAN BY SABIC INNOVATIVE PLASTICS 1/4" OR 1/2" DETAILS 'D' & 'E'	DEZIGNER 1/2" OR 1/4"	SIKAFLEX 222UV OR 295UV 1/16" X 5/8" BEAD
		STEEL TRIM	
2	9/16" HS LAMINATED GLASS WITH SENTRYGLAS INTERLAYER DETAILS 'J', 'K' & 'L'	DEZIGNER 1/2"	SIKAFLEX 552 OR DOW CORNING 995/983 1/16" X 5/8" BEAD
		STEEL TRIM	
		1" STEEL TRIM	
3	1-1/16" SUPERLITE II-XL™ BY SAFTI WITH SENTRYGLAS INTERLAYER and DETAILS 'H', 'F' & 'G'	1" STEEL TRIM (DETAIL 'G')	SIKAFLEX 552 OR DOW CORNING 995/983 1/16" X 5/8" BEAD
		SECURITY VISION FRAME SG-10 BY ANENEMOSTAT (DETAIL 'F')	

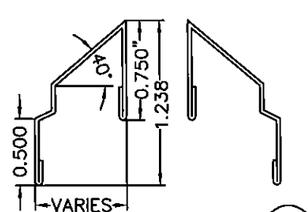

DEZIGNER TRIM PROFILE (18-1)
MATERIAL: 24 GA A40 STEEL

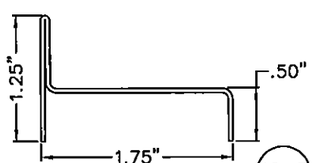

1" STEEL TRIM (18-3)
MATERIAL: 20 GAGE A40 STEEL

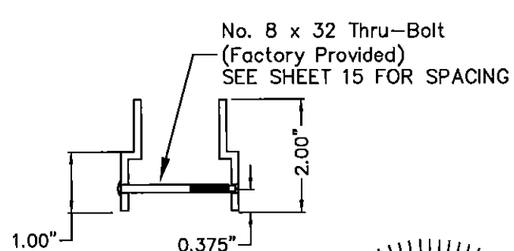

HIGH SECURITY METAL VISION FRAME (18-4)
MATERIAL: 12 GAGE ANEMOSTAT SG-10

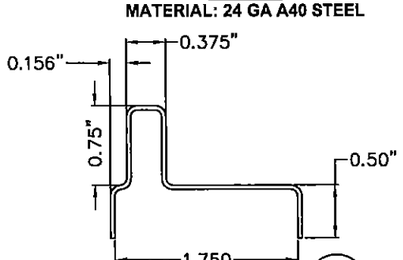

STEEL TRIM (18-2)
MATERIAL: 20GA A40 STEEL

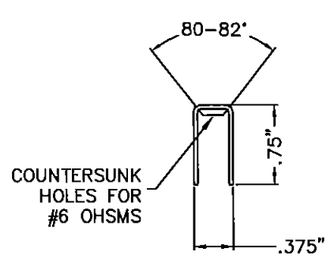

GLAZING BEAD FOR STEEL OVERLAPPING TRIMS
20 GAGE A40 STL

NOTES:

1. SEE SHT.1 FOR ELEVATIONS, SHT.2 FOR SIZES AND SHT.6 FOR DOOR & FRAME MATERIAL SPECIFICATIONS.
2. SEE SHT.3 NOTE 2. AND SHEET 4 FOR ANCHOR REQUIREMENTS
3. SEE SHT. 4 FOR WALL CONSTRUCTION AND ANCHORING SYSTEM
4. SEE SHT. 6 FOR AVAILABLE OPENING SIZES, JAMB DEPTHS AND SPECIFICATIONS
5. APPROVED HARDWARE ON SHEETS 1, 2, 3, 5, 9, 10, 11 AND 15 TO BE INSTALLED PER MANUFACTURER'S INSTALLATION INSTRUCTIONS.

PRODUCT REVISED
as complying with the Florida Building Code
Acceptance No. 15-0526.22
Expiration Date 5/5/17
By Ishwar L. Chand
Miami-Dade Product Control

GORDON D. THOMAS
PROFESSIONAL ENGINEER
LICENSE No 46718
STATE OF FLORIDA
11/15/07
Gordon Thomas PE
3759 Blossom Court
Mason, OH 45040
Florida # 46718
Date

BEND RADIUS

THIRD ANGLE PROJECTION

DRAWN	YMF	DATE 05/20/07
CHECKED		
APPROVED		
ENG. APPVL	JPD	11/15/07

SCHLAGE LOCK COMPANY, LLC
6810 HILLSADLE COURT
INDIANAPOLIS, IN 46250

MANUFACTURING FACILITY:
STEELCRAFT
9017 BLUE ASH ROAD
CINCINNATI, OH 45242

TITLE: STEELCRAFT H SERIES SINGLE OUTSWING GLAZED COMMERCIAL STEEL DOOR WITH AND WITHOUT PANIC EXIT DEVICES

GLASS TRIM OPTIONS.

SIZE	FLAT	DWG NO.	REV
		IRGS07	K

SCALE: NTS AUTOCAD

SHEET 8 of 15

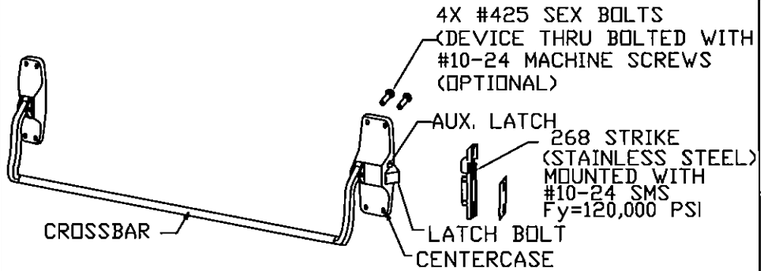

VON DUPRIN 88-F RIM DEVICE, USED IN CONFIGURATIONS: 7 & 8

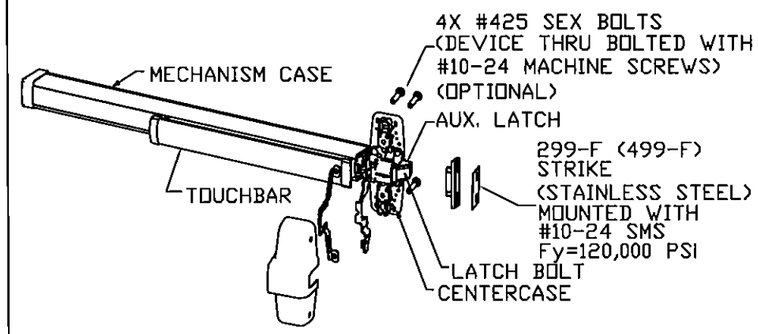

VON DUPRIN 98/99(F) RIM DEVICE
USED IN CONFIGURATIOS: 7 & 8

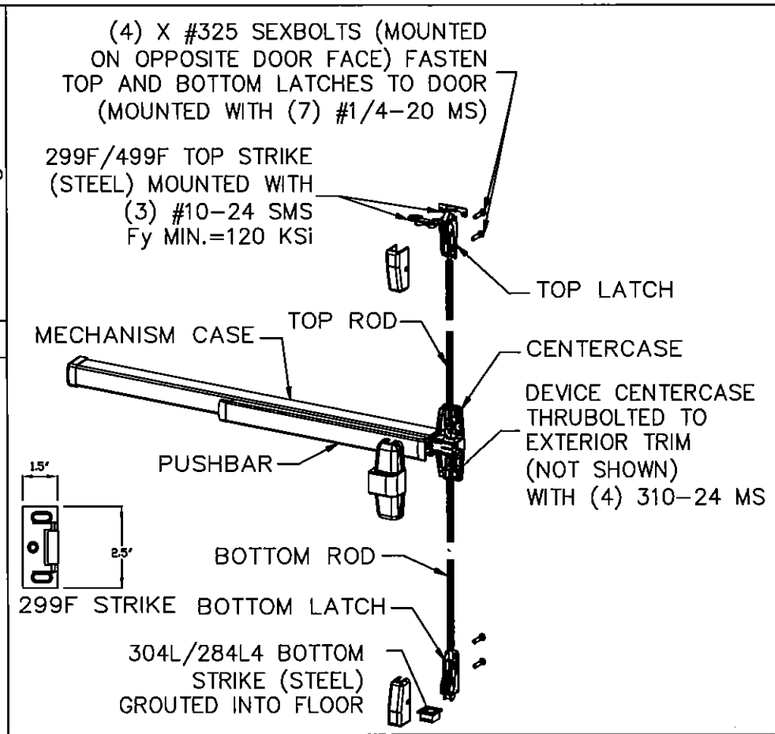

VON DUPRIN 98/9927(F) SURFACE VERTICAL ROD EXIT DEVICE
USED IN CONFIGURATIONS: 3

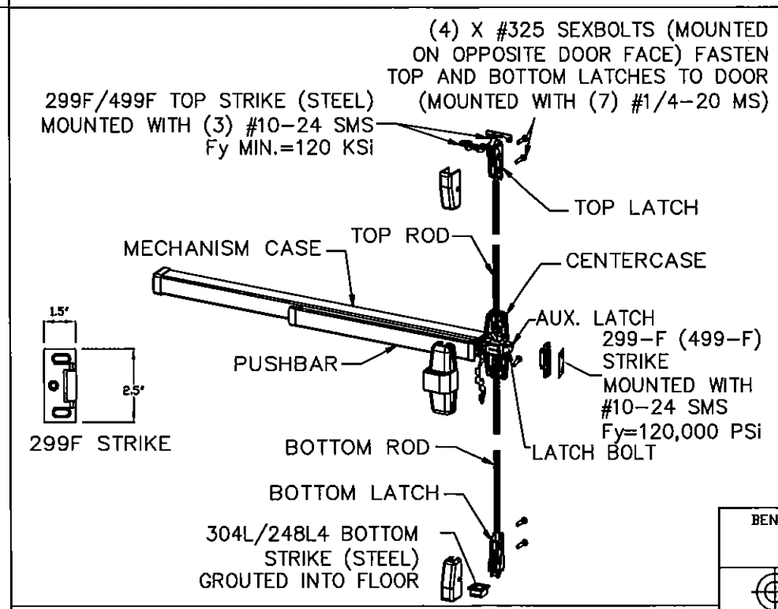

VON DUPRIN 98/9957(F)THREE-POINT EXIT DEVICE
USED IN CONFIGURATIONS: 5 & 6

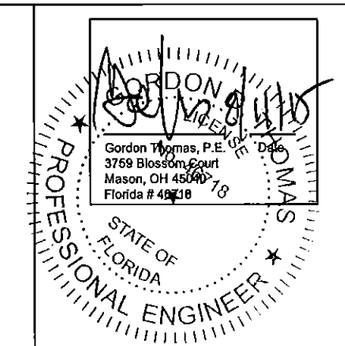

REVISIONS				
LTR	DESCRIPTION		DATE	APPROVED
A	APPROVAL DWG	YMF	05/20/07	
C	REVISED DWG	RAP	12/12/07	
D	REVISED DWG	YMF	07/28/08	
E	REVISED PER_MDBCCO	YMF	01/30/09	
F	REVISED PER_MDBCCO	YMF	02/05/09	
G	REVISED DWG	YMF	01/04/10	
H	REVISED DWG	YMF	04/09/10	
J	REVISED NAME	JPD	11/01/13	
K	REVISED DWG	JPD	02/01/15	

GLAZING MATERIAL SEE TABLE 8 ON SHEET 8.
SEE SHEETS 1, 2, 3 AND 7 FOR INFORMATION ON
DAYLIGHT OPENING, GLASS TYPES AND SIZE
LIMITATIONS

SECTION R-R
HORIZONTAL MID-RAIL

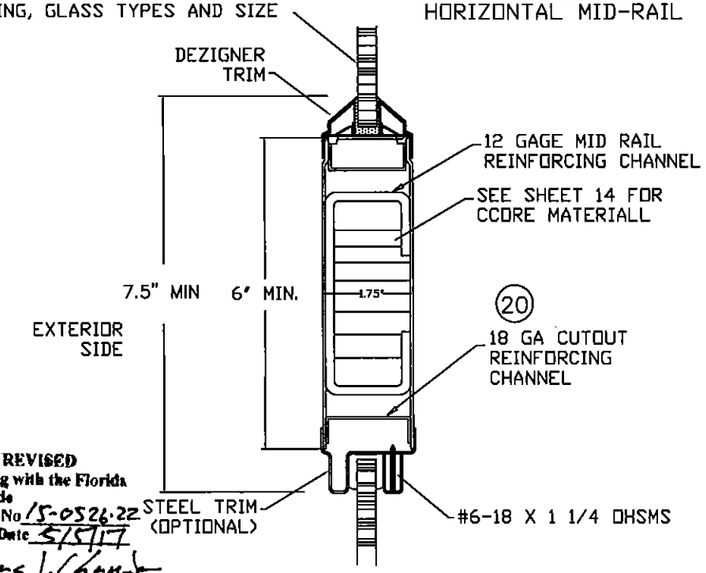

PRODUCT REVISED
as complying with the Florida
Building Code
Acceptance No 15-0526.22
Expiration Date 5/5/17
By Ishaq I. Chanda
Manager Product Control

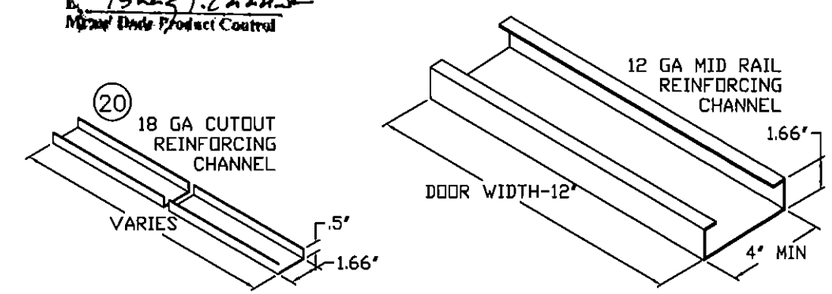

NOTES:
1. ELECTRICAL FUNCTIONS/INSTALLATION AND FIRE RATINGS ARE NOT PART OF THIS APPROVAL, TO BE REVIEWED AND APPROVED BY BUILDING OFFICIAL
2. EXIT HARDWARE OPTIONS:
FOR 98/99 & XP98/99 SERIES - FUNCTIONS E, RX, LX, SS, EL, QEL, CX, F;(OPTIONS MAY VARY PER SERIES)
TRIM: ALL APPLICABLE TRIMS AVAILABLE.
FOR 88-F SERIES - FUNCTION E; TRIM: ALL APPLICABLE TRIMS AVAILABLE. PN MODEL OFFERED.

BEND RADIUS

THIRD ANGLE PROJECTION

DRAWN YMF	DATE 05/20/07
CHECKED	CDATE
APPROVED	ADATE
ENG. APPVL JPD	EDATE 11/15/07

SCHLAGE LOCK COMPANY, LLC
6810 HILLSDALE COURT
INDIANAPOLIS, IN 46250

MANUFACTURING FACILITY:
STEELCRAFT
9017 BLUE ASH ROAD
CINCINNATI, OH 45242

TITLE: STEELCRAFT H SERIES SINGLE OUTSWING GLAZED COMMERCIAL STEEL DOORS WITH AND WITHOUT PANIC EXIT DEVICES

EXIT HARDWARE FOR GLASS SINGLE DOORS.

SIZE	FLAT	DWG NO.	REV
		IRGS07	K
SCALE: NTS	AUTOCAD		SHEET 9 of 15

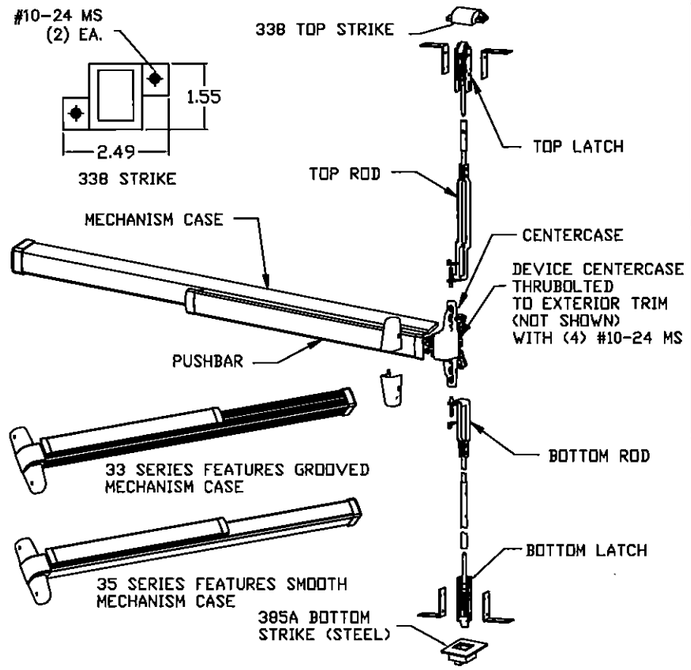

VON DUPRIN SERIES 33/3547A-F
USED IN CONFIGURATIONS: 4

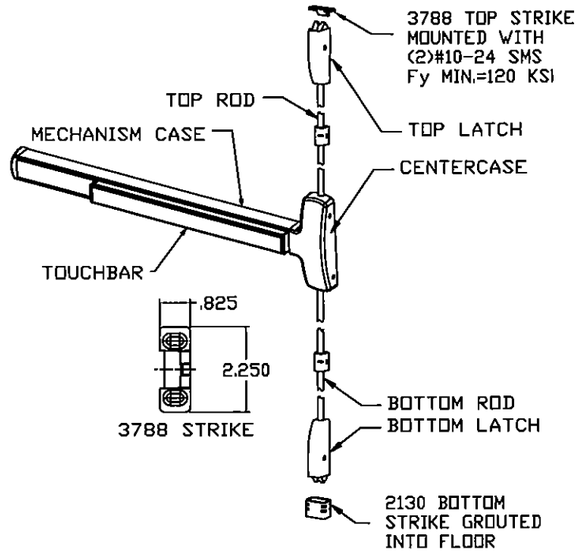

FALCON (F)25-V, SURFACE VERTICAL ROD EXIT DEVICE
USED IN DOOR CONFIGURATION 3 (SEE SHT.1)

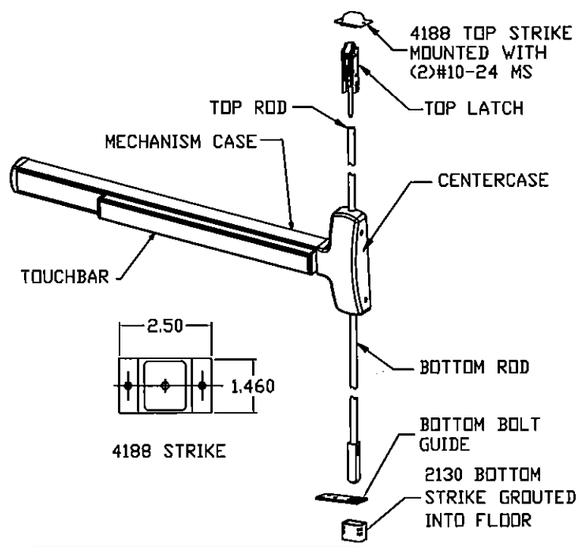

FALCON F-25-C, **CONCEALED VERTICAL ROD EXIT DEVICE**
USED IN **DOOR CONFIGURATION** 4 (SEE SHT.1)

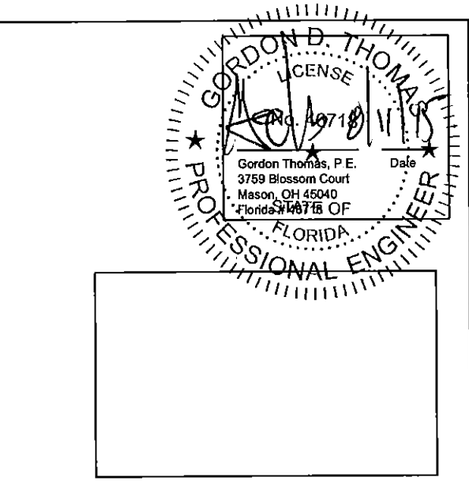

REVISIONS

LTR	DESCRIPTION			DATE	APPROVED
A	APPROVAL	DWG	YMF	05/20/07	
C	REVISED	DWG	RAP	12/12/07	
D	REVISED	DWG	YMF	07/28/08	
E	REVISED	PER_MDBCCO	YMF	01/30/09	
F	REVISED	PER_MDBCCO	YMF	02/05/09	
G	REVISED	DWG	YMF	01/13/10	
H	REVISED	DWG	YMF	04/09/10	
J	REVISED	NAME	JPD	11/01/13	
K	REVISED	DWG	JPD	02/01/15	

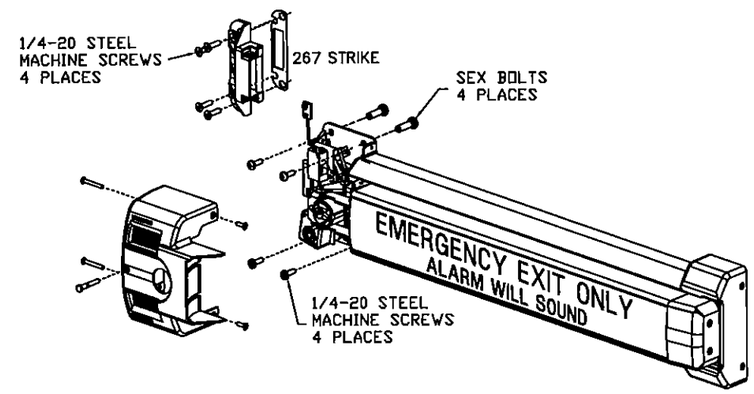

VON DUPRIN SERIES 2670 GAURD-X
USED IN CONFIGURATIONS: 10 & 10A

PRODUCT REVISED
as complying with the Florida
Building Code
Acceptance No 15-0526.22
Expiration Date 5/5/17
By Isaac J. Chance
Miami Dade Product Control

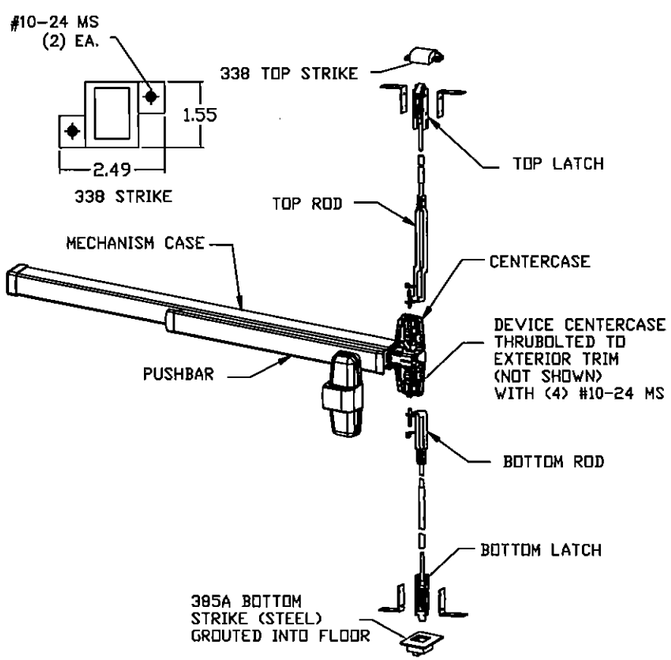

VON DUPRIN 98/9947-F (CONCEALED) VERTICAL ROD
USED IN CONFIGURATIONS: 4

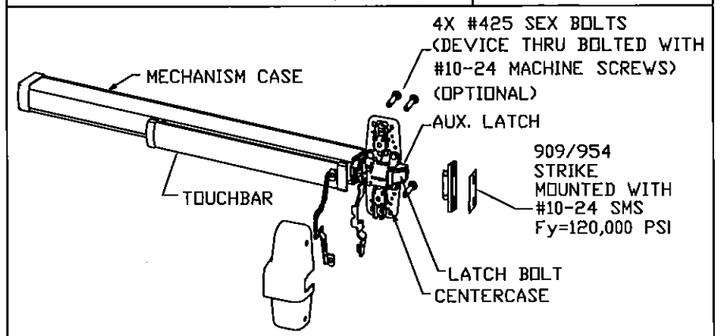

VON DUPRIN XP98/99(F)
USED IN CONFIGURATIONS: 9 & 9A

NOTES:
1. ELECTRICAL FUNCTIONS/INSTALLATION AND FIRE RATINGS ARE NOT PART OF THIS APPROVAL, TO BE REVIEWED AND APPROVED BY BUILDING OFFICIAL
2. EXIT HARDWARE OPTIONS:
FOR 98/99 & XP98/99 SERIES - FUNCTIONS E, RX, LX, SS, EL, QEL, CX, F (OPTIONS MAY VARY PER SERIES)
TRIMS: ALL APPLICABLE TRIMS AVAILABLE..
PN MODEL OFFERED.
FOR 33/35-F SERIES - FUNCTIONS RX, LX, EL, QEL, SS
TRIM: ALL APPLICABLE TRIMS AVAILABLE.
FOR 2670 GUARD-X
TRIM: ALL APPLICABLE TRIMS AVAILABLE.
F-25-C & (F)25V SERIES - FUNCTIONS AE, DM, LM, LK, KOR, ED, EL, EA, FSA, FSE, HWEA
TRIMS: ALL APPLICABLE TRIM AVAILABLE

BEND RADIUS

THIRD ANGLE PROJECTION

SCHLAGE LOCK COMPANY, LLC
6810 HILLSDALE COURT
INDIANAPOLIS, IN 46250

MANUFACTURING FACILITY:
STEELCRAFT
9017 BLUE ASH ROAD
CINCINNATI, OH 45242

TITLE: STEELCRAFT H SERIES SINGLE OUTSWING GLAZED COMMERCIAL STEEL DOORS WITH AND WITHOUT PANIC EXIT DEVICES

HARDWARE OPTIONS FOR GLASS SINGLE DOORS.

DRAWN YMF	DATE 05/20/07		
CHECKED			
APPROVED		SIZE FLAT	DWG NO. IRGS07	REV K
ENG. APPVL JPD	11/15/07	SCALE: NTS	AUTOCAD	SHEET 10 of 15

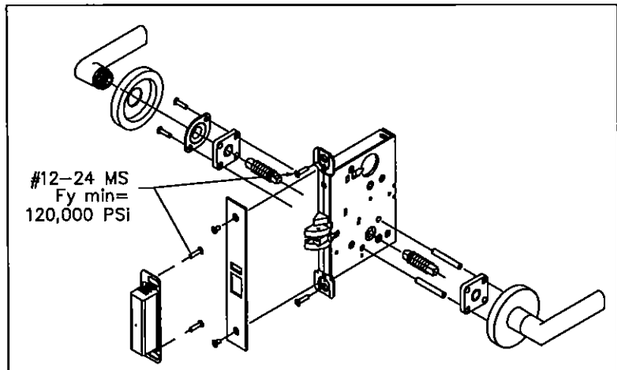

SCHLAGE L/LV 9000 SERIES MORTISE LOCKSET W/O DEADBOLT
3/4" MIN LATCH THROW. USED IN CONFIGURATIONS: 1 & 11

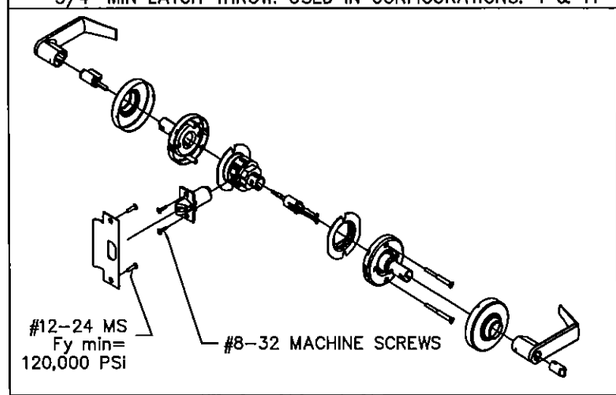

SCHLAGE D/ND–SERIES CYLINDRICAL LEVER LOCKSET
1/2" MIN LATCH THROW. USED IN CONFIGURATIONS: 2 & 12

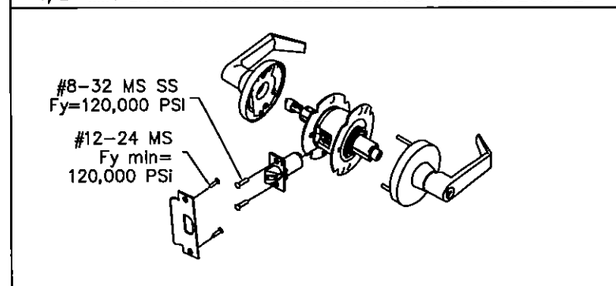

FALCON, T–SERIES CYLINDRICAL LEVER LOCKSET
1/2" MIN LATCH THROW. USED IN CONFIGURATIONS: 2 & 12

NOTE:
ELECTRICAL FUNCTIONS/INSTALLATION AND FIRE RATINGS ARE NOT PART OF THIS APPROVAL, TO BE REVIEWED AND APPROVED BY BUILDING OFFICIAL

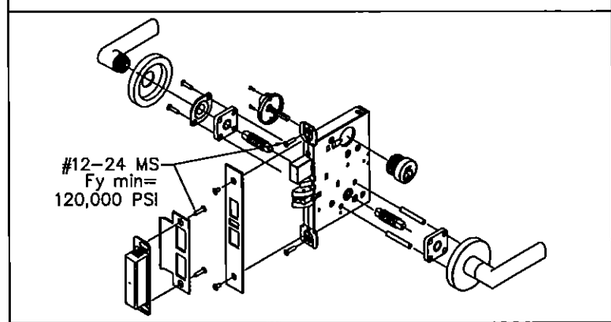

SCHLAGE L/LV 9400 SERIES MORTISE LOCKSET W/ DEADBOLT
LATCH THROW MIN 3/4", BOLT THROW MIN 1"
USED IN CONFIGURATIONS: 1 & 11

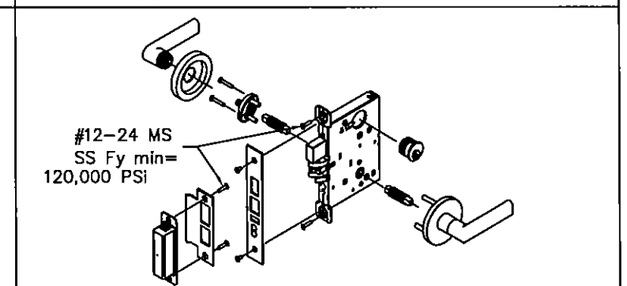

FALCON M–SERIES MORTISE LOCKSET W/ DEADBOLT SHOWN
LATCH THROW MIN 3/4", BOLT THROW MIN 1"
USED IN CONFIGURATIONS: 1 & 11

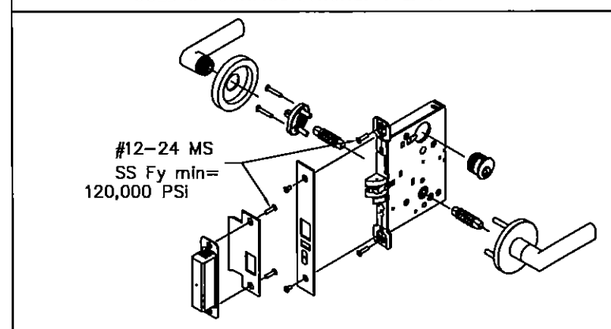

FALCON M–SERIES MORTISE LOCKSET W/O DEADBOLT SHOWN
(MIN THROW – 3/4") USED IN CONFIGURATIONS: 1 & 11

GORDON D. THOMAS
LICENSE
No. 46718
STATE OF FLORIDA
PROFESSIONAL ENGINEER
Gordon Thomas, P.E.
3759 Blossom Court
Mason, OH 45040
Florida # 46718
Date: 8/11/15

REVISIONS					
LTR	DESCRIPTION			DATE	APPROVED
A	APPROVAL	DWG	YMF	05/20/07	
B	REVISED	DWG	RAP	11/26/07	
C	REVISED	DWG	RAP	12/12/07	
D	REVISED	DWG	YMF	07/28/08	
E	REVISED	PER_MDBCCO	YMF	01/30/09	
F	REVISED	PER_MDBCCO	YMF	02/05/09	
G	REVISED	PER_MFR	YMF	05/18/09	
H	REVISED	PER_MDBCCO	YMF	05/18/09	
J	REVISED	NAME	JPD	11/01/13	
K	REVISED	DWG	JPD	02/01/15	

PRODUCT REVISED
as complying with the Florida
Building Code
Acceptance No. 15-0526.22
Expiration Date 5/5/17
By: Shay L. Chandler
Miami Dade Product Control

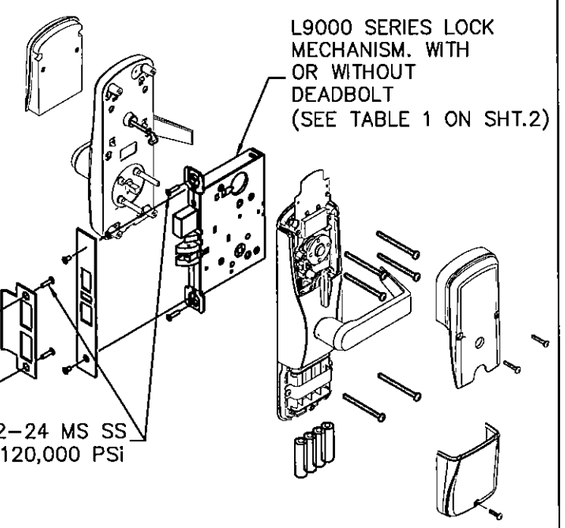

SCHLAGE CO/AD MD OR MS SERIES MORTISE LOCKSET
USED IN CONFIGURATIONS: 1 & 11 (SEE SHT. 1)

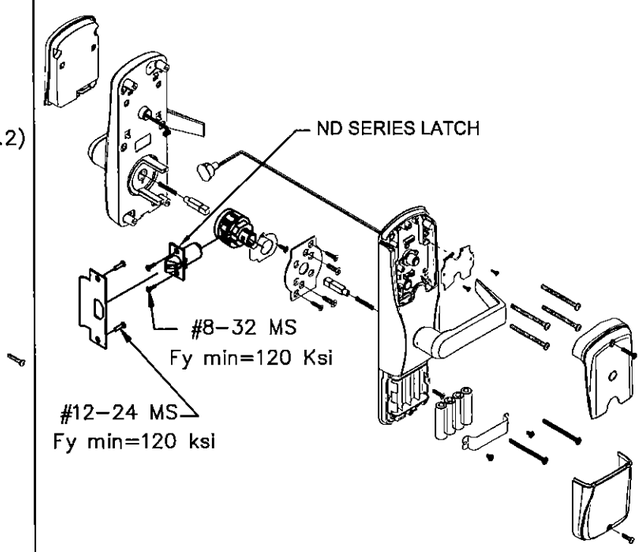

SCHLAGE CO/AD CY SERIES CYLINDRICAL LOCKSET
USED IN CONFIGURATIONS: 2 & 12 (SEE SHT.1)

BEND RADIUS

THIRD ANGLE PROJECTION

DRAWN YMF	DATE 05/20/07
CHECKED	
APPROVED	
ENG. APPVL JPD	11/15/07

SCHLAGE LOCK COMPANY, LLC
6810 HILLSDALE COURT
INDIANAPOLIS, IN 46250

MANUFACTURING FACILITY:
STEELCRAFT
9017 BLUE ASH ROAD
CINCINNATI, OH 45242

TITLE: STEELCRAFT H SERIES SINGLE OUTSWING GLAZED COMMERCIAL STEEL DOORS WITH AND WITHOUT PANIC EXIT DEVICES

LOCKSET HARDWARE FOR GLASS SINGLE DOORS

SIZE	FLAT	DWG NO.	REV
		IRGS07	K
SCALE: NTS	AUTOCAD		SHEET 11 of 15

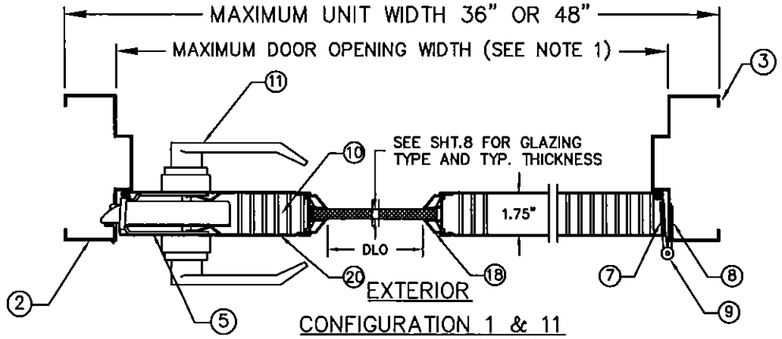

CONFIGURATION 1 & 11
MORTISE LOCKSET
SECTION A–A

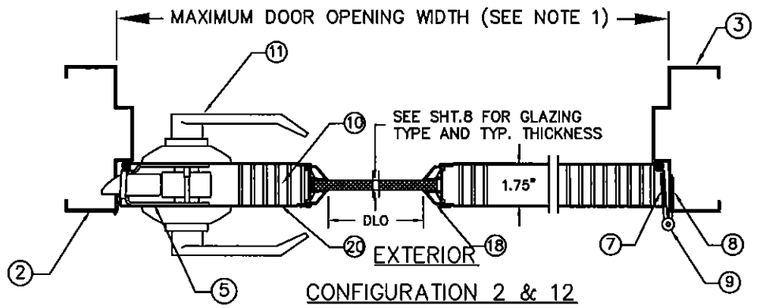

CONFIGURATION 2 & 12
CYLINDRICAL LOCKSET
SECTION A–A

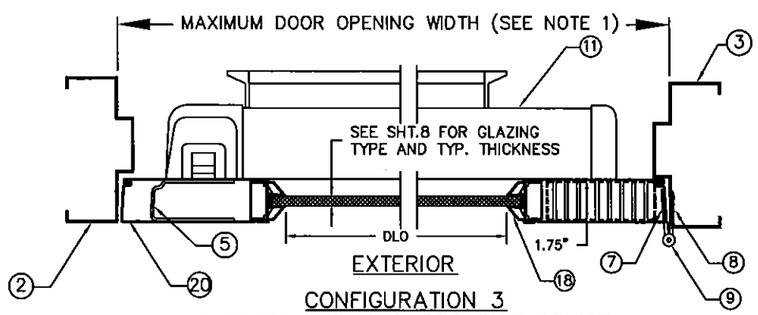

CONFIGURATION 3
SURFACE VERTICAL ROD EXIT DEVICE.
SECTION A–A

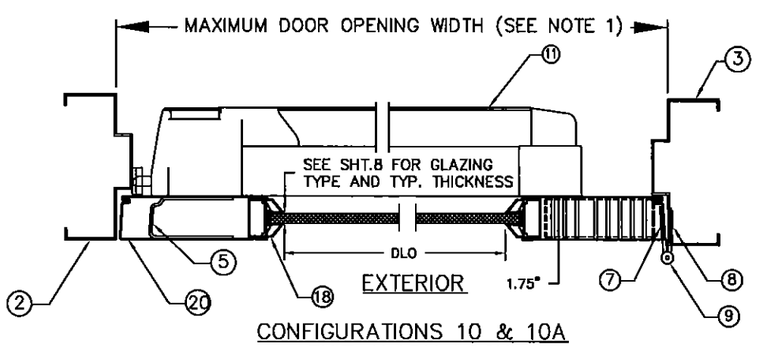

CONFIGURATIONS 10 & 10A
EXIT ALARM LOCK.
SECTION A–A

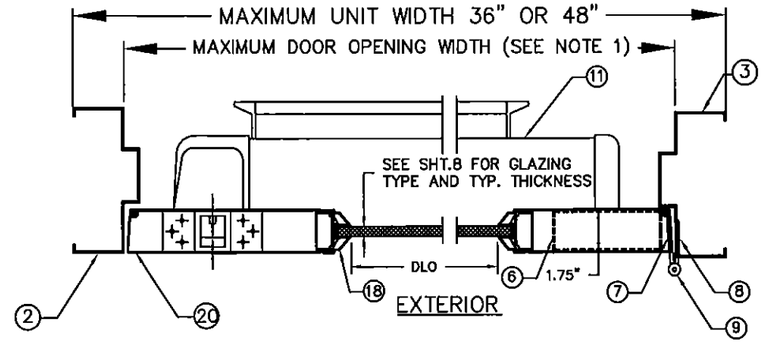

CONFIGURATION 4
CONCEALED VERTICAL ROD EXIT DEVICE.
SECTION A–A

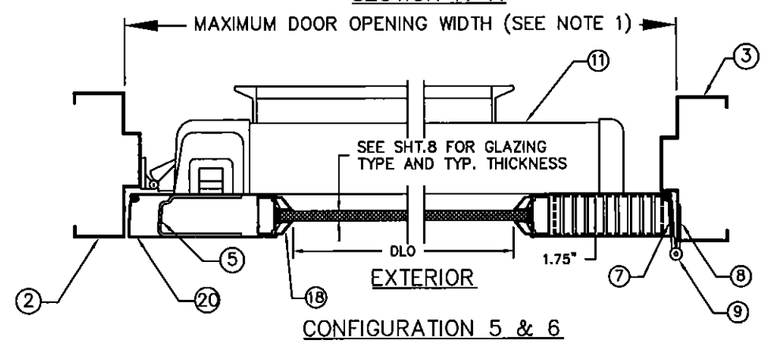

CONFIGURATION 5 & 6
THREE–POINT LATCHING EXIT DEVICE.
SECTION A–A

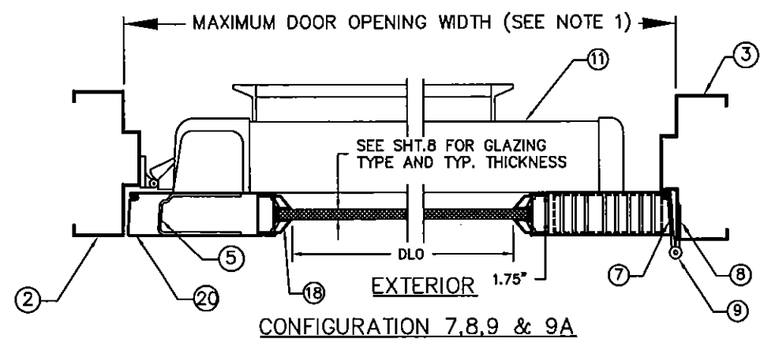

CONFIGURATION 7,8,9 & 9A
RIM EXIT DEVICE.
SECTION A–A

REVISIONS					
LTR	DESCRIPTION			DATE	APPROVED
A	APPROVAL	DWG	YMF	05/20/07	
B	REVISED	DWG	RAP	11/26/07	
C	REVISED	DWG	RAP	12/12/07	
D	REVISED	DWG	YMF	07/28/08	
E	REVISED	PER_MDBCCO	YMF	01/30/09	
F	REVISED	PER_MDBCCO	YMF	02/05/09	
G	REVISED	DWG	YMF	01/05/10	
H	REVISED	DWG	YMF	04/09/10	
J	REVISED	NAME	JPD	11/01/13	
K	REVISED	DWG	JPD	02/01/15	

PRODUCT REVISED
as complying with the Florida
Building Code
Acceptance No. 15-0526.22
Expiration Date 5/5/17
By Ishaq I. Chaudhry
Miami-Dade Product Control

NOTES:
1. FOR MAXIMUM DOOR OPENING AND GLASS (DLO) SIZE, SEE TABLE 1 ON SHEET 2 AND SHEETS 7 & 8 FOR LIMITATIONS.
2. SEE SHEET 4 FOR ANCHOR INSTALLATION AND SILL INSTALLATION DETAILS

GORDON D. THOMAS
LICENSE
No. 46718
STATE OF FLORIDA
PROFESSIONAL ENGINEER
Gordon Thomas, P.E. Date
3759 Homard Court
Mason, OH 45040
Florida # 46718

BEND RADIUS

THIRD ANGLE PROJECTION

DRAWN	YMF	DATE 05/20/07
CHECKED		
APPROVED		
ENG. APPVL	JPD	11/15/07

SCHLAGE LOCK COMPANY, LLC
6810 HILLSDALE COURT
INDIANAPOLIS, IN 46250

MANUFACTURING FACILITY:
STEELCRAFT
9017 BLUE ASH ROAD
CINCINNATI, OH 45242

TITLE: STEELCRAFT H SERIES SINGLE OUTSWING GLAZED COMMERCIAL STEEL DOORS WITH AND WITHOUT PANIC EXIT DEVICES

HORIZONTAL CROSS SECTIONS FOR GLASS SINGLE DOORS.

SIZE	FLAT	DWG NO.	REV
		IRGS07	K

SCALE: NTS | AUTOCAD | SHEET 12 of 15

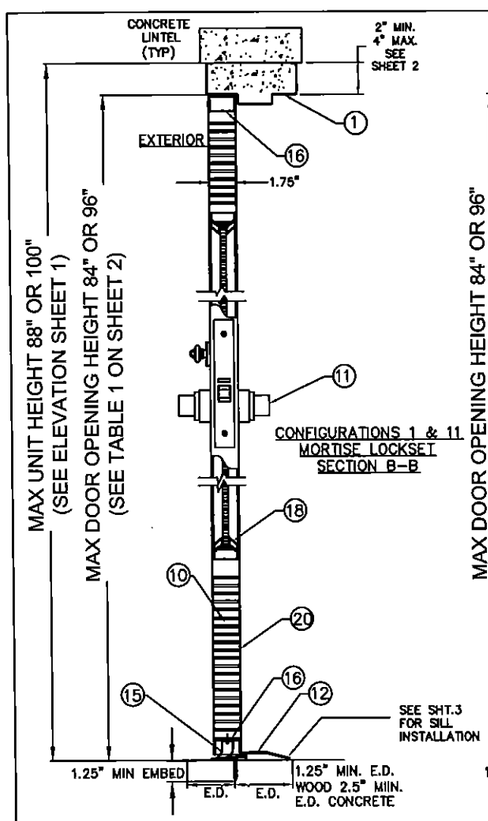

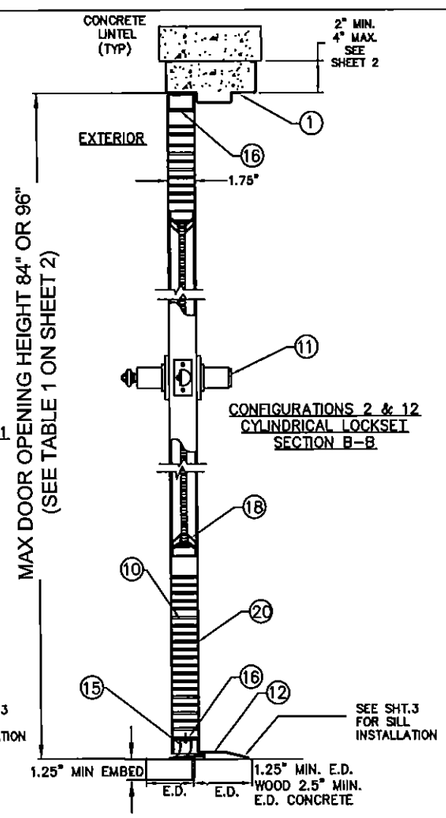

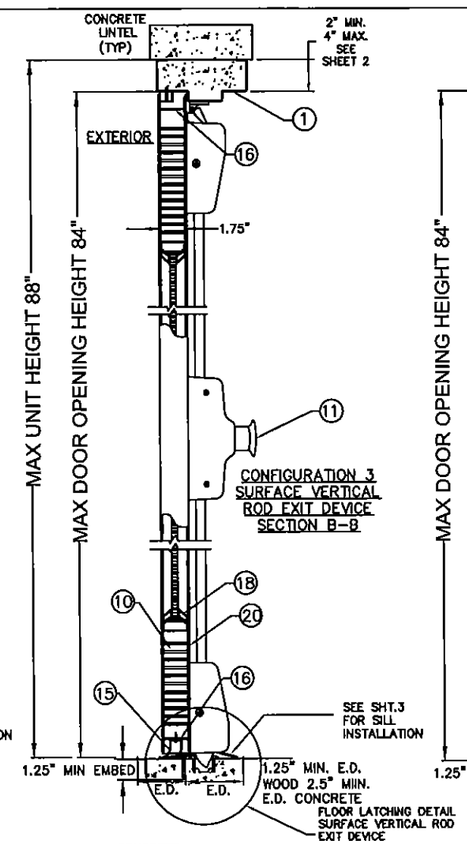

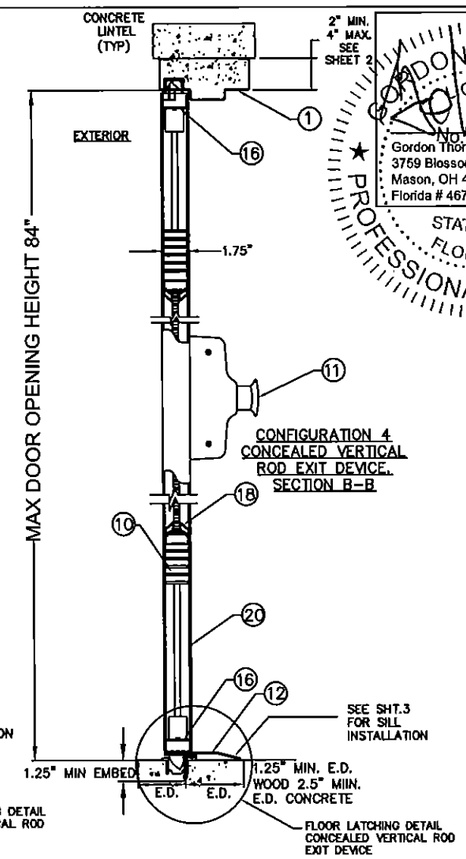

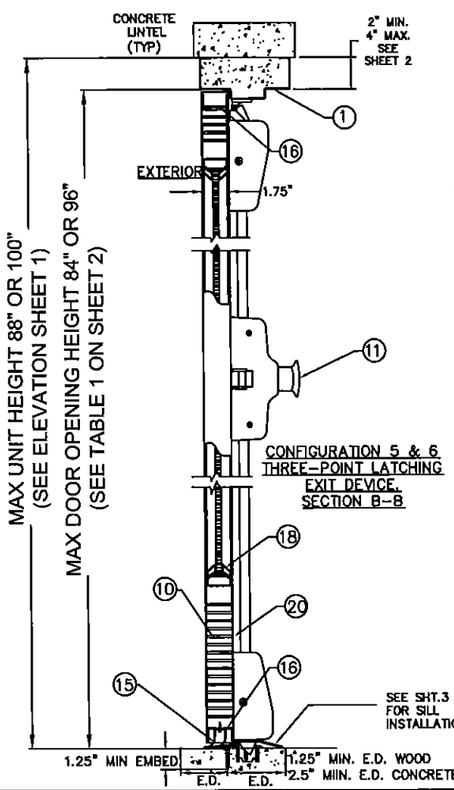

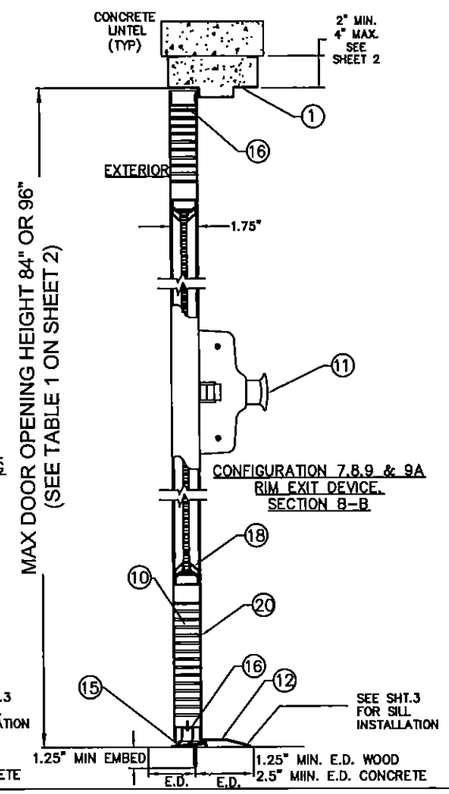

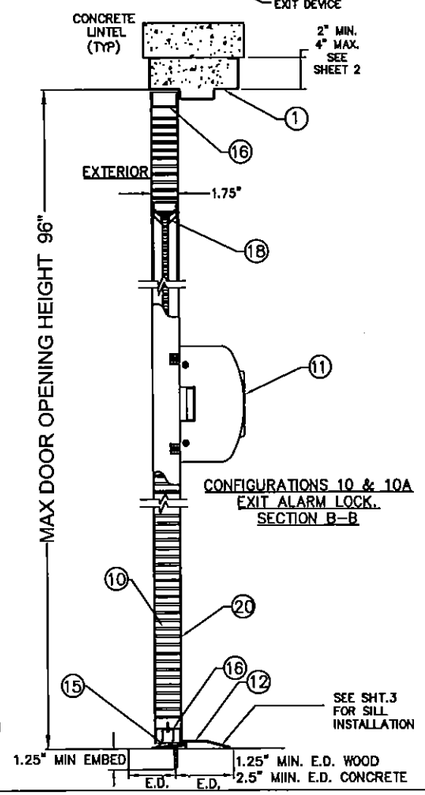

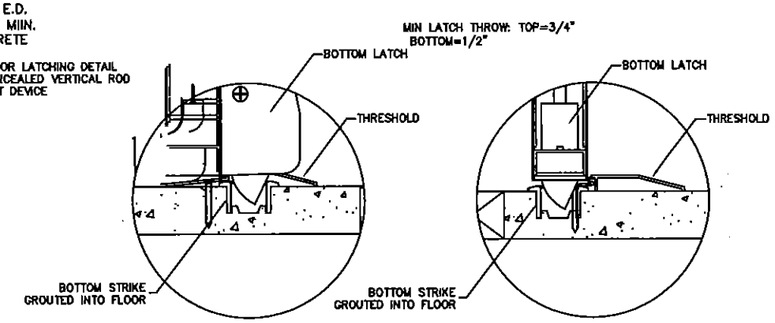

FLOOR LATCHING DETAIL SURFACE VERTICAL ROD EXIT DEVICE

FLOOR LATCHING DETAIL CONCEALED VERTICAL ROD EXIT DEVICE

NOTES:

1. FOR MAXIMUM DOOR OPENING SIZE AND GLASS (DLO) SIZE, SEE TABLE 1 ON SHEET 2 AND SHEETS 7 & 8 FOR LIMITATIONS.
2. SEE SHEET 4 FOR ANCHORS INSTALLATION AND SILL INSTALLATION DETAILS.

GORDON D. THOMAS LICENSED No. 46718 STATE OF FLORIDA PROFESSIONAL ENGINEER

Gordon Thomas, P.E. 3759 Blossom Court Mason, OH 45040 Florida # 46718

Date 05/20/07

PRODUCT REVISED as complying with the Florida Building Code Acceptance No. 15-0526.22 Expiration Date 5/5/17 By Dept. Dade Product Control

REVISIONS

LTR	DESCRIPTION			DATE	APPROVED
A	APPROVAL	DWG	YMF	05/20/07	
B	REVISED	DWG	RAP	11/26/07	
C	REVISED	DWG	RAP	12/12/07	
D	REVISED	DWG	YMF	07/28/08	
E	REVISED	PER_MDBCCO	YMF	01/30/09	
F	REVISED	PER_MDBCCO	YMF	02/05/09	
G	REVISED	DWG	YMF	01/05/10	
H	REVISED	DWG	YMF	04/09/10	
J	REVISED	NAME	JPD	11/01/13	
K	REVISED	DWG	JPD	02/01/15	

BEND RADIUS

THIRD ANGLE PROJECTION

SCHLAGE LOCK COMPANY, LLC
6810 HILLSADLE COURT
INDIANAPOLIS, IN 46250

MANUAFCTURING FACILITY:
STEELCRAFT
9017 BLUE ASH ROAD
CINCINNATI, OH 45242

TITLE: STELLCRAFT H SERIES SINGLE OUTSWING GLAZED COMMERCIAL STEEL DOORS WITH AND WITHOUT PANIC EXIT DEVICES

VERTICAL CROSS SECTIONS FOR GLASS SINGLE DOORS.

DRAWN YMF	DATE 05/20/07		
CHECKED			
APPROVED		SIZE FLAT	DWG NO. IRGS07	REV K
ENG. APPVL JPD	11/15/07	SCALE: NTS	AUTOCAD	SHEET 13 of 15

REVISIONS			
LTR	DESCRIPTION	DATE	APPROVED
A	APPROVAL DWG JPD	02/03/14	
B	REVISED DWG JPD	02/01/15	
C	REVISED DWG JPD	05/05/15	

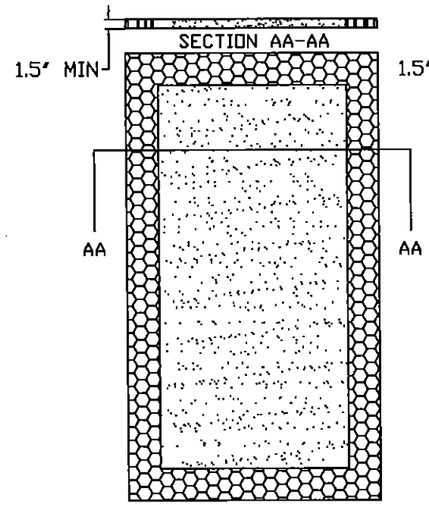

(A) EXPANDED POLYSTYRENE FOAM
BY ATLAS EPS
DENSITY: 1.0 LBS/FT^3

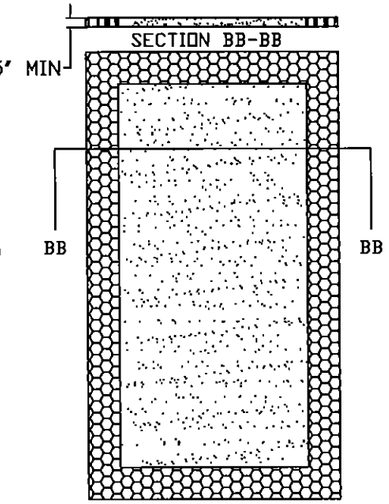

(B) POLYISOCYANURATE
(POLYURETHANE)
BY ELLIOT CO. OF INDIANAPOLIS, IN
DENSITY: 2 LBS/FT^3

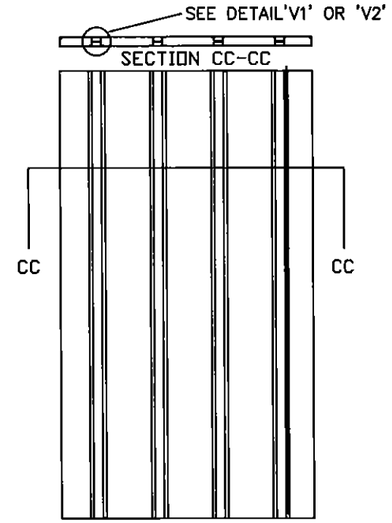

(C) STEEL STIFFENED
HAT SHAPED SECTIONS

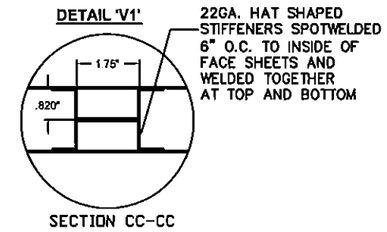

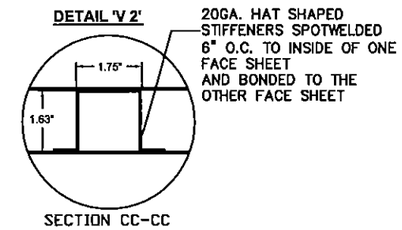

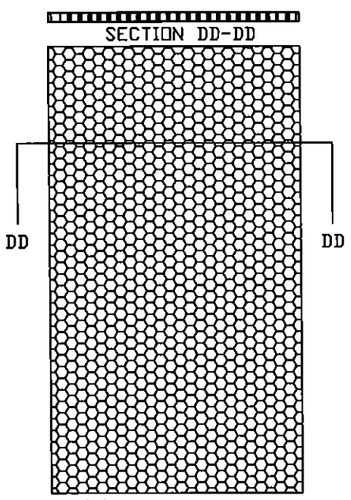

(D) HONEYCOMB
KRAFT PAPER.

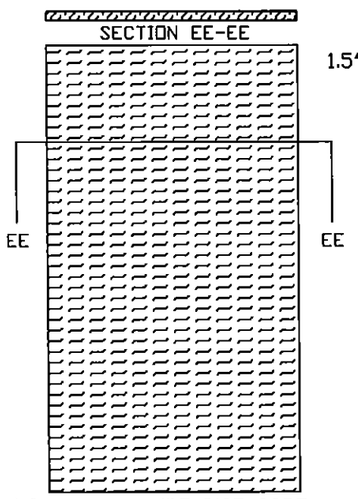

(E) TEMPERATURE RISE CORE
MINERAL FIBER BOARD
DENSITY: 17±1.5 LBS/FT^3
PYROPHIBIC SYSTEMS LTD
PYROPHOBIC PSL P25C-60 CORE
OR
MARSHFIELD DOOR SYSTEMS
CALCIUM SILICATE MINERAL CORE

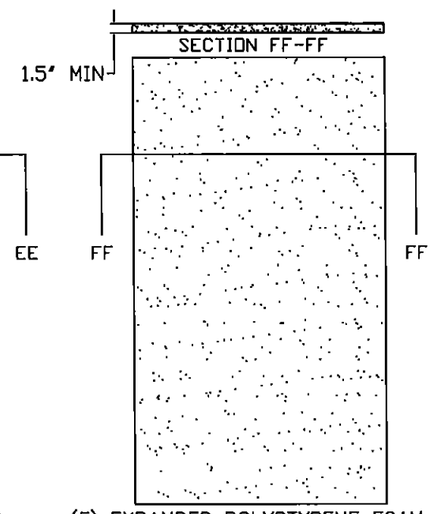

(F) EXPANDED POLYSTYRENE FOAM
BY ATLAS EPS DENSITY: 1.0 LB/FT^3
OR POLYISOCYANURATE
(POLYURETHANE)
BY ELLIOT CO. OF INDIANAPOLIS
DENSITY: 2 LBS/FT^3

PRODUCT REVISED
as complying with the Florida
Building Code
Acceptance No. 15-0526.22
Expiration Date 5/5/17
Product Control

NOTES:
1. CORE MATERIAL SHOWN WITHOUT CUTOUTS FOR REINFORCEMENTS

GORDON D. THOMAS
LICENSE
No. 46718
STATE OF FLORIDA
PROFESSIONAL ENGINEER
Gordon Thomas, P.E. Date
Mason, OH 45040
Florida # 46718

BEND RADIUS

THIRD ANGLE PROJECTION

DRAWN JPD	DATE 02/03/14
CHECKED	
APPROVED	
ENG. APPVL	

SCHLAGE LOCK COMPANY, LLC
6810 HILLSDALE COURT
INDIANAPOLIS, IN 46250

MANUFACTURING FACILITY:
STEELCRAFT
9017 BLUE ASH ROAD
CINCINNATI, OH 45242

TITLE: STEELCRAFT H SERIES SINGLE OUTSWING GLAZED COMMERCIAL STEEL DOORS WITH AND WITHOUT PANIC EXIT DEVICES

DOOR CORE OPTIONS

SIZE	FLAT	DWG NO.	REV
		IRGS07	C
SCALE: NTS	AUTOCAD		SHEET 14 of 15

STEEL BUTT HINGE
4.5" X 4.5" STD. WT. MIN.
IVES 5BB1/3CB1
STANLEY FBB179/1900
HAGER BB1279
.134" MIN. THICKNESS
Fy MIN. = 36ksi

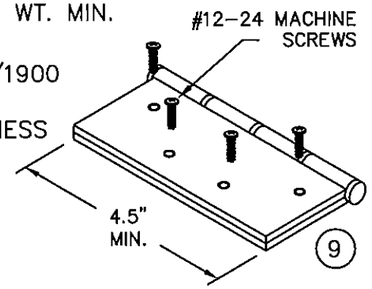

CONTINUOUS HINGE
IVES 112HD & 224HD
STANLEY 661HD
SELECT SL11HD
PEMKO FM_HD SERIES
HAGER 780-224HD
ABH A240HD
ALUMINUM 6036-T6 MIN
.110" MIN. THICKNESS

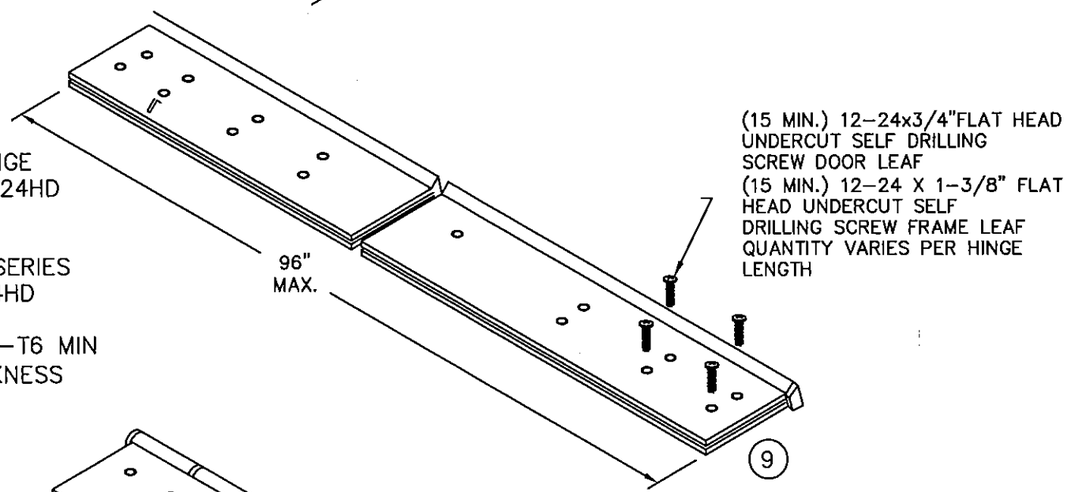

STEEL CONTINUOUS HINGE
IVES 600
.075 (14GA) MIN. THCKNESS
1012 COLD ROLLED STEEL
Fy MIN. 45ksi
STAINLESS STEEL CONTINUOUS HINGE
IVES 700, 700CS
HAGER 790-900
MARKAR FM-300 & HG305
ABH A500
.075" (14GA) MIN. THICKNESS
304 STAINLESS STEEL
Fy MIN. 31ksi

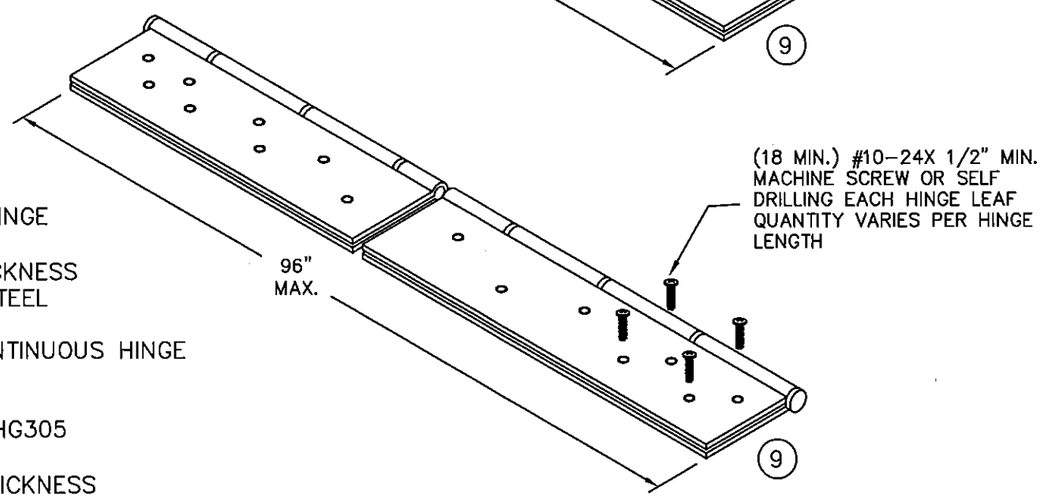

CONTINUOUS HINGE NOTES:
1. QUANTITY OF SCREWS VARIES PER HINGE LENGTH, MANUFACTURER AND MODEL NUMBER
2. SCREW SPACING VARIES PER HINGE LENGTH, MANUFACTURER AND MODEL NUMBER
3. INSTALL HINGES PER THE MANUFACTURERS INSTALLATION INSTRUCTIONS

GORDON D. THOMAS LICENSE No. 46718 STATE OF FLORIDA PROFESSIONAL ENGINEER
Gordon Thomas
3759 Blossom Court
Mason, OH 45040
Florida # 46718
Date 8/11/15

REVISIONS			
LTR	DESCRIPTION	DATE	APPROVED
A	APPROVAL DWGS.	11/01/13	
B	REVISED DWGS.	02/01/15	

PRODUCT REVISED
as complying with the Florida Building Code
Acceptance No. 15-0526.22
Expiration Date 5/5/17
By Shawn J. Chand
Mgr. Dade Product Control

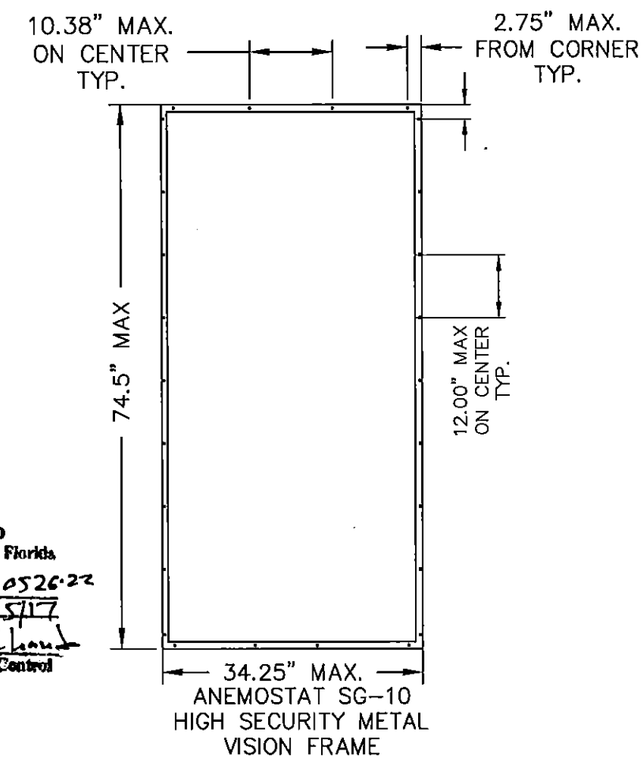

BEND RADIUS
THIRD ANGLE PROJECTION

SCHLAGE LOCK COMPANY, LLC
6810 HILLSDALE COURT
INDIANAPOLIS, IN 46250

MANUFACTURING FACILITY:
STEELCRAFT
9017 BLUE ASH ROAD
CINCINNATI, OH 45242

TITLE: STEELCRAFT H SERIES SINGLE OUTSWING GLAZED COMMERCIAL STEEL DOORS WITH AND WITHOUT PANIC EXIT DEVICES

HINGE OPTIONS

DRAWN	DATE	SIZE	FLAT	DWG NO.	REV
JPD	02/03/14			IRGS07	B
CHECKED					
APPROVED		SCALE: NTS	AUTOCAD		SHT 15 OF 15
ENG. APPVL					