MIAMI-DADE COUNTY
PRODUCT CONTROL SECTION
11805 SW 26 Street, Room 208
Miami, Florida 33175-2474
T (786) 315-2590 F (786) 315-2599
www.miamidade.gov/economy

DEPARTMENT OF REGULATORY AND ECONOMIC RESOURCES (RER)
BOARD AND CODE ADMINISTRATION DIVISION

NOTICE OF ACCEPTANCE (NOA)

Construction Specialties, Inc.
49 Meeker Avenue
Cranford, NJ 07016

SCOPE:

This NOA is being issued under the applicable rules and regulations governing the use of construction materials. The documentation submitted has been reviewed and accepted by Miami-Dade County RER-Product Control Section to be used in Miami Dade County and other areas where allowed by the Authority Having Jurisdiction (AHJ).

This NOA shall not be valid after the expiration date stated below. The Miami-Dade County Product Control Section (In Miami Dade County) and/or the AHJ (in areas other than Miami Dade County) reserve the right to have this product or material tested for quality assurance purposes. If this product or material fails to perform in the accepted manner, the manufacturer will incur the expense of such testing and the AHJ may immediately revoke, modify, or suspend the use of such product or material within their jurisdiction. RER reserves the right to revoke this acceptance, if it is determined by Miami-Dade County Product Control Section that this product or material fails to meet the requirements of the applicable building code.

This product is approved as described herein, and has been designed to comply with the Florida Building Code, including the High Velocity Hurricane Zone.

DESCRIPTION: Model DC-6804 Aluminum Louver

APPROVAL DOCUMENT: Drawing No. **RD-794**, titled "DC-6804 Submittal Drawings", sheets 1 through 6 of 6, dated 10/02/2013, with revision 1 dated 06/25/2015, prepared by the manufacturer, signed and sealed by L. David Rice, P.E., bearing the Miami-Dade County Product Control revision stamp with the Notice of Acceptance number and expiration date by the Miami-Dade County Product Control Section.

MISSILE IMPACT RATING: Large and Small Missile Impact Resistant

LABELING: Each unit shall bear a permanent label with the manufacturer's name or logo, Del Rio, TX, model/series, and following statement: "Miami-Dade County Product Control Approved", unless otherwise noted herein.

RENEWAL of this NOA shall be considered after a renewal application has been filed and there has been no change in the applicable building code negatively affecting the performance of this product.

TERMINATION of this NOA will occur after the expiration date or if there has been a revision or change in the materials, use, and/or manufacture of the product or process. Misuse of this NOA as an endorsement of any product, for sales, advertising or any other purposes shall automatically terminate this NOA. Failure to comply with any section of this NOA shall be cause for termination and removal of NOA.

ADVERTISEMENT: The NOA number preceded by the words Miami-Dade County, Florida, and followed by the expiration date may be displayed in advertising literature. If any portion of the NOA is displayed, then it shall be done in its entirety.

INSPECTION: A copy of this entire NOA shall be provided to the user by the manufacturer or its distributors and shall be available for inspection at the job site at the request of the Building Official.

This NOA **revises NOA # 13-0606.11** and consists of this page 1 and evidence pages E-1 and E-2, as well as approval document mentioned above.

The submitted documentation was reviewed by **Carlos M. Utrera, P.E.**

MIAMI-DADE COUNTY APPROVED

10/29/2015

NOTICE OF ACCEPTANCE: EVIDENCE SUBMITTED

A. DRAWINGS

1. Drawing No. **RD-794**, titled "DC-6804 Submittal Drawings", sheets 1 through 6 of 6, dated 10/02/2013, with revision 1 dated 06/25/2015, prepared by the manufacturer, signed and sealed by L. David Rice, P.E.

B. TESTS

1. Test reports on 1) Uniform Static Air Pressure Test, Loading per FBC TAS 202-94
   2) Large Missile Impact Test per FBC, TAS 201-94
   3) Cyclic Wind Pressure Loading per FBC, TAS 203-94
   along with marked-up drawings and installation diagram of DC-6804 Aluminum Louver, prepared by Intertek/Architectural Testing, Inc., Report No. **E7307.01-109-18**, dated 06/19/2015, signed and sealed by Michael D. Stremmel, P.E.
2. Test Report on High Velocity Wind Driven Rain Resistance per AMCA 550-09 of a Model DC-6804 Aluminum Vertical Louver, prepared by Intertek/Architectural Testing, Inc, Test Report No. **E4141.01-602-44**, dated 01/13/2015, signed and sealed by Joseph A. Reed, P.E.

   "Submitted under NOA # 13-0606.11"
3. Test reports on 1) Uniform Static Air Pressure Test, Loading per FBC TAS 202-94
   2) Large Missile Impact Test per FBC, TAS 201-94
   3) Cyclic Wind Pressure Loading per FBC, TAS 203-94
   along with marked-up drawings and installation diagram of DC-6804 Aluminum Louvers, prepared by Architectural Testing, Inc., Report No. **D0121.01-109-18**, dated 10/04/2013, signed and sealed by Michael D. Stremmel, P.E.

C. CALCULATIONS

1. Anchor and structural calculations prepared by Rice Engineering, dated 07/21/2015, signed and sealed by L. David Rice, P.E.

   "Submitted under NOA # 13-0606.11"
2. Anchor and structural calculations prepared by Rice Engineering, dated 02/03/2015, signed and sealed by L. David Rice, P.E.

10/28/2015

Carlos M. Utrera, P.E.
Product Control Examiner
NOA No. 15-0826.35
Expiration Date: April 9, 2020
Approval Date: November 5, 2015

NOTICE OF ACCEPTANCE: EVIDENCE SUBMITTED

D. QUALITY ASSURANCE

1. Miami-Dade Department of Regulatory and Economic Resources (RER)

E. MATERIAL CERTIFICATIONS

1. Test report on Impact Resistance and Cyclic Pressures per ASTM E1886-05 (Missile Level 'E') of Model DC-6804 Aluminum Louvers with Vertical Blades, prepared by Intertek/Architectural Testing, Inc., Test Report No. **E5956.01-109-44** dated 04/09/2015, signed and sealed by Michael D. Stremmel, P.E.

F. STATEMENTS

1. Statement letter of code conformance to the 5th edition (2014) FBC issued by Rice Engineering, dated 07/21/2015, signed and sealed by L. David Rice, P.E.
2. Statement letter of no financial interest issued by Rice Engineering, dated 07/21/2015, signed and sealed by L. David Rice, P.E.

10/28/2015

Carlos M. Utrera, P.E.
Product Control Examiner
NOA No. 15-0826.35
Expiration Date: April 9, 2020
Approval Date: November 5, 2015

SPECIMEN 1

DESIGN WIND LOAD = 150 PSF

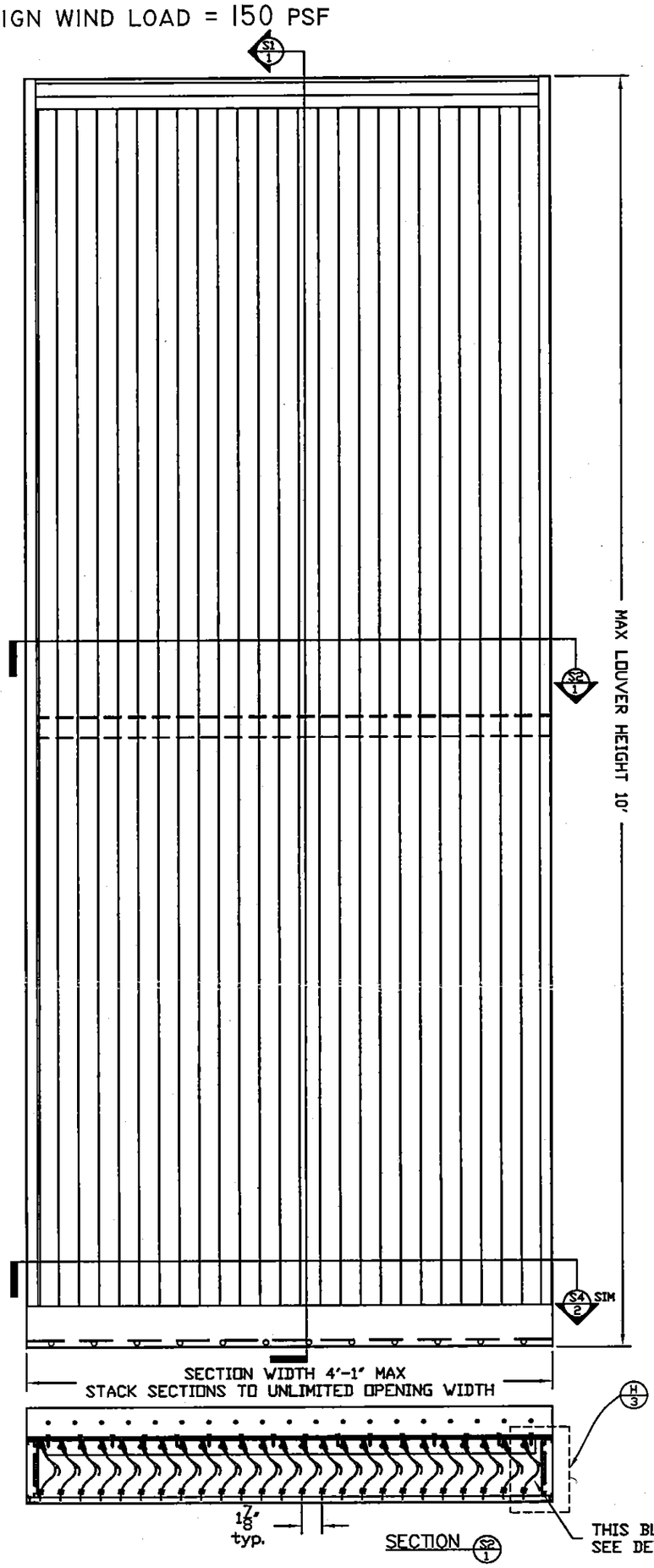

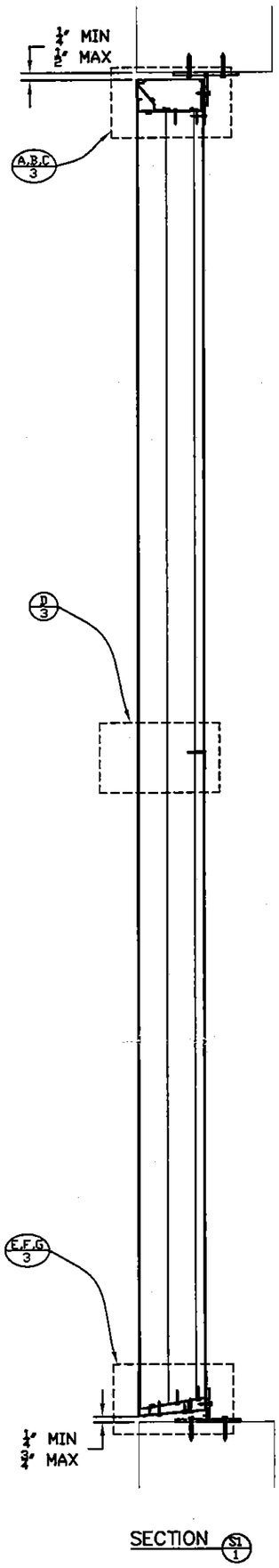

PRODUCT REVISED
as complying with the Florida
Building Code
Acceptance No 15-0626.35
Expiration Date 04/09/2020
By
Miami Dade Product Control

RICE ENGINEERING
105 School Creek Trail
Luxemburg, WI 54217
Phone: 920.845.1042
Fax: 920.845.1048
www.rice-inc.com

Florida Firm No: F-01000005061
Certificate of Authorization: #9090
L. David Rice
Registration No: 50923

L. DAVID RICE LICENSE No. 50923 STATE OF FLORIDA PROFESSIONAL ENGINEER

JUL 21 2015

1) It shall be the responsibility of the Structural Engineer of Record to verify the capacity of the structure to support the loads imposed by the louvers.
2) These louvers have been designed according to the Florida Building Code and the Aluminum Design Manual. They are tested in accordance with Dade County protocols TAS 201, TAS 202 and TAS 203.
3) All fasteners shall be stainless steel or plated steel.
4) All block grout substrate shall be a minimum of 2000 psi .
5) Section widths and heights are limited as shown in elevations and details.
6) The louver may be installed in a location where the room behind the louver is NOT DESIGNED to drain water penetrating into the room and the room will house non waterproof or non water resistant equipment, components or supplies.
7) Each fastener used must be detailed on the drawing and verified on the NOA.
8) Separation of unpainted aluminum and dissimilar materials per Florida Building Code Section 2003.8.4.2 to be maintained by the installer.
10) This louver system has been tested, analyzed and approved for design pressures up to and including +/-150 PSF.
11) Individual section sizes limited to 41 sq. ft.
12) Stack sections horizontally to an unlimited opening width.
13) Louver Construction - Head, sill and jambs are constructed of extruded aluminum. The corners are coped and butted, secured with (3) #10 x 1 1/2" hex head screws at each corner, through the sill into the jambs and through the jambs into the head. The blades are secured to the head and sill using (2) #10 x 1 1/2" hex head screws and a weld, 1/8" x 1/2" long, on both sides of the blade at each blade end.
14) These louvers have been designed and tested in accordance with AMCA 540 Test Method for Louvers Impacted by Wind Borne Debris (Basic Protection, Missile Level D and Enhanced Protection, Missile Level E). These louvers have been designed and tested in accordance with AMCA 550 Test Method for High Velocity Wind Driven Rain Resistant Louvers. Minimum section size to be 16" x 16".
15) A horizontal blade stiffener angle is required if section height is greater than 60".

Construction Specialties™
49 MEEKER AVENUE, CRANFORD, NEW JERSEY
PHONE: 1-800-631-7379 / FAX: 908-272-5844

PROJECT: DC-6804 SUBMITTAL DRAWINGS	REVISION: 1 6-25-15
TITLE: SPECIMEN 1	DATE: 10-02-13
SCALE: 1" = 1'	SHEET: 1 OF 6
DRW BY: R. GEIST	DRW NO : RD-794-1

SPECIMEN 2

DESIGN WIND LOAD = 150 PSF

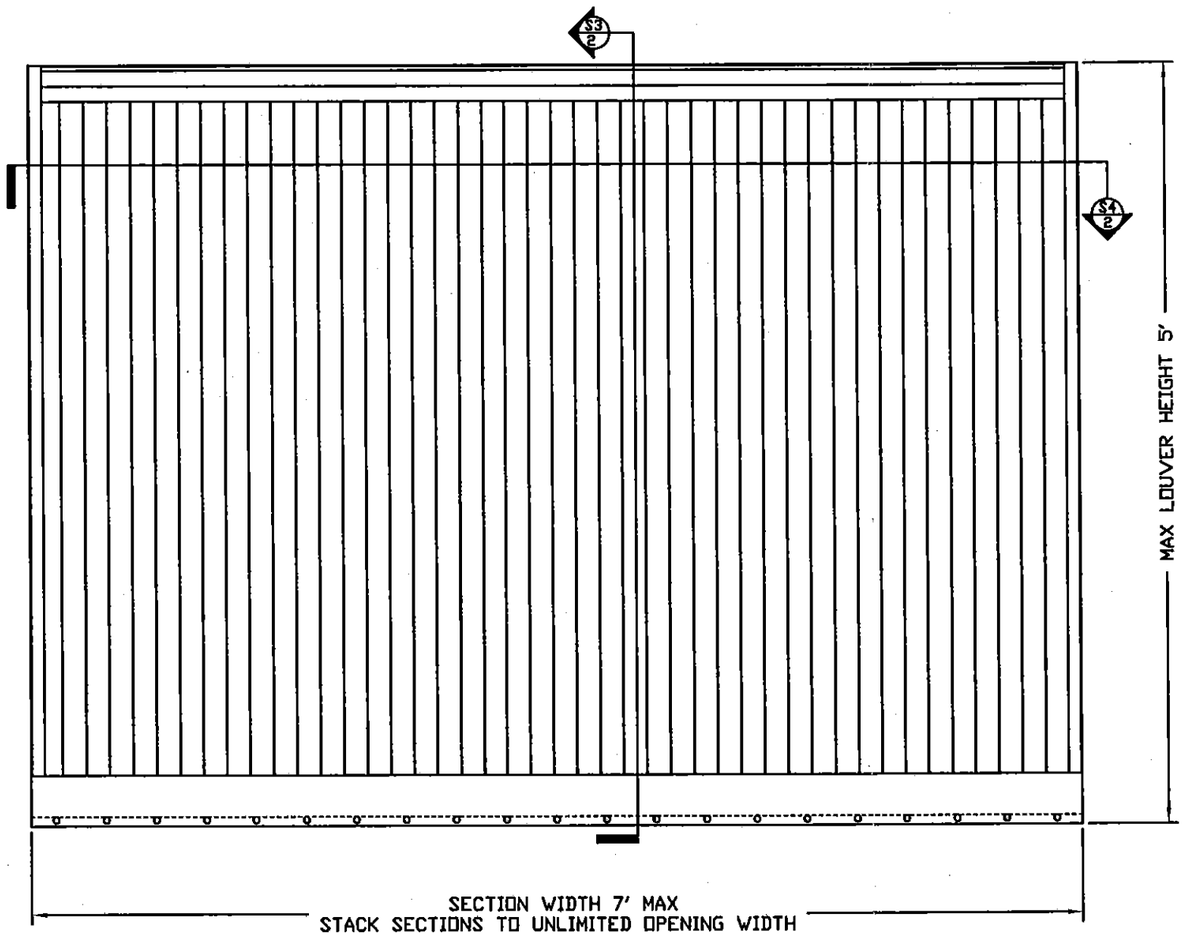

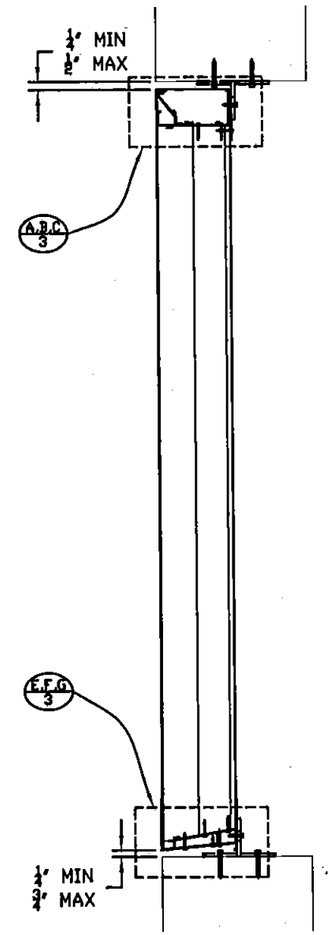

SECTION S3/2

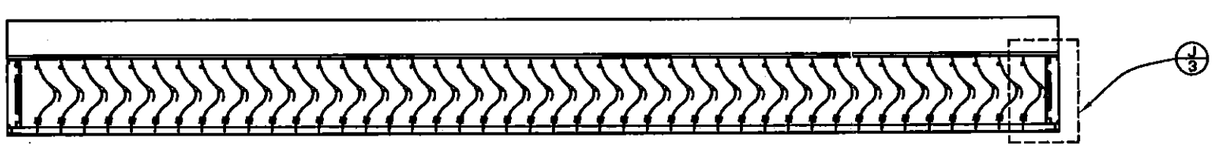

SECTION S4/2

L. DAVID RICE
LICENSE No. 50923
STATE OF FLORIDA
PROFESSIONAL ENGINEER

JUL 21 2015

RICE ENGINEERING
105 School Creek Trail
Luxemburg, WI 54217
Phone: 920.845.1042
Fax: 920.845.1048
www.rice-inc.com

Florida Firm No: F-01000005061
Certificate of Authorization: #9090
L. David Rice
Registration No. 50923

PRODUCT REVISED
as complying with the Florida
Building Code
Acceptance No 15-0920.05
Expiration Date 04/09/2020
By
Miami Dade Product Control

PROJECT: DC-6804 SUBMITTAL DRAWINGS	REVISION: 1 6-25-15
TITLE: SPECIMEN 2	DATE: 10-02-13
SCALE: 1" = 1'	SHEET: 2 OF 6
DRW BY: R. GEIST	DRW NO : RD-794-2

Construction Specialties
49 MEEKER AVENUE, CRANFORD, NEW JERSEY
PHONE: 1-800-631-7379 / FAX: 908-272-5844

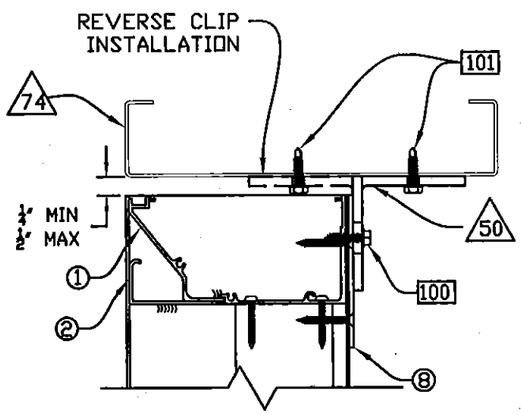

16 Ga MINIMUM STEEL STUD

Detail A/3

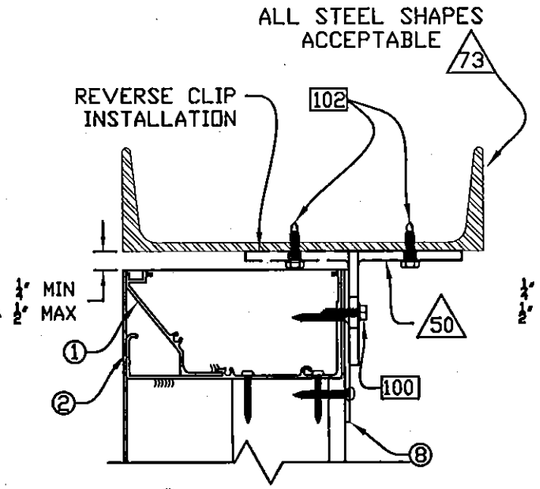

3/16" MINIMUM STRUCTURAL STEEL

Detail B/3

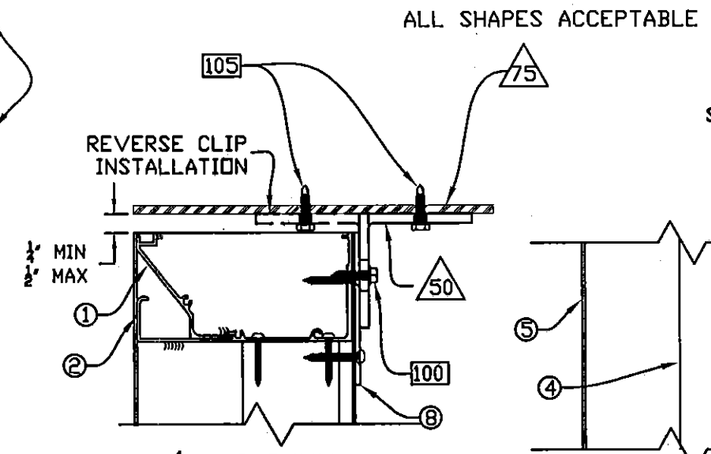

1/8" MINIMUM ALUMINUM

Detail C/3

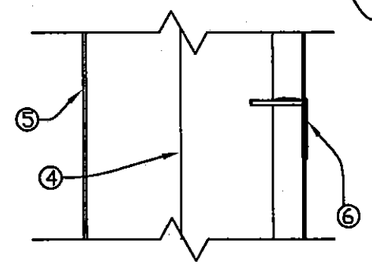

Detail D/3

SP-1 ONLY

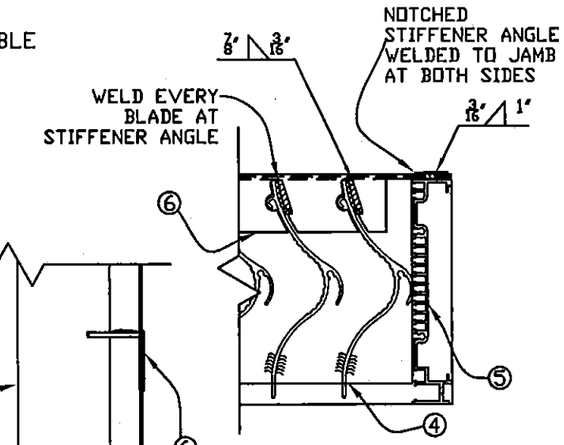

Detail H/3

SP-1 ONLY

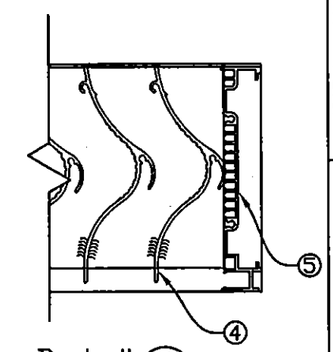

Detail J/3

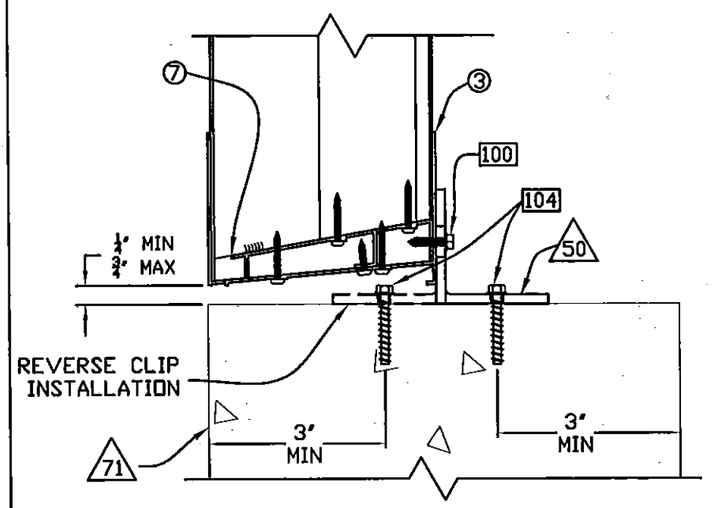

3000 LB MIN CONCRETE

Detail E/3

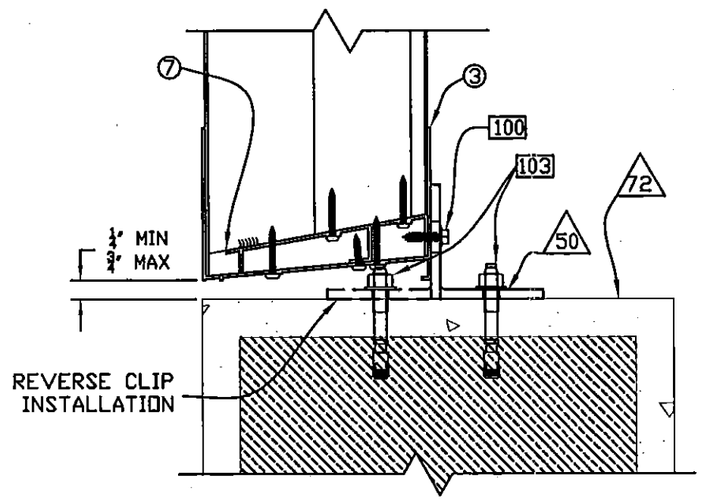

GROUT FILLED CMU

Detail F/3

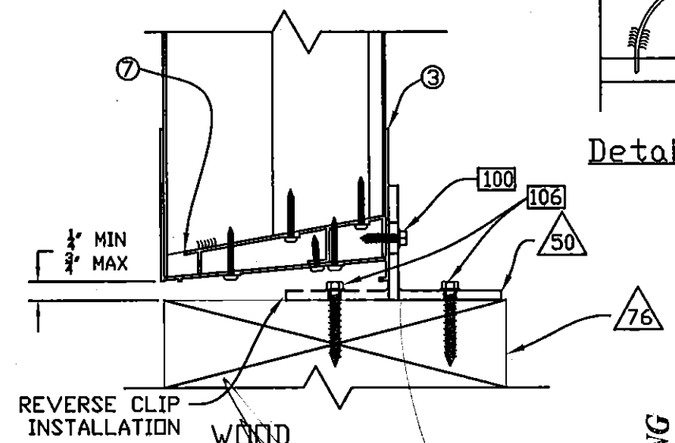

WOOD G=0.42 MIN

Detail G/3

PRODUCT REVISED
as complying with the Florida Building Code
Acceptance No 15-0926.35
Expiration Date 04/07/2020
By
Miami Dade Product Control

JUL 21 2015

L. DAVID RICE LICENSE No. 50923 STATE OF FLORIDA PROFESSIONAL ENGINEER

RICE ENGINEERING
105 School Creek Trail
Luxemburg, WI 54217
Phone: 920.845.1042
Fax: 920.845.1048
www.rice-inc.com

Florida Firm No: F-01000005061
Certificate of Authorization: #9090
L. David Rice
Registration No: 50923

Construction Specialties
49 MEEKER AVENUE, CRANFORD, NEW JERSEY
PHONE: 1-800-631-7579 / FAX: 908-272-5844

PROJECT: DC-6804 SUBMITTAL DRAWINGS
TITLE: DETAILS
SCALE: 3" = 1'
DRW BY: R. GEIST
REVISION: 1 6-25-15
DATE: 10-02-13
SHEET: 3 OF 6
DRW NO : RD-794-3

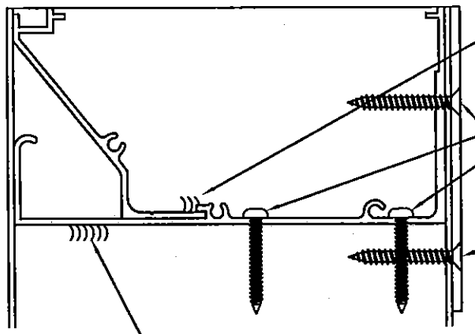

WELD HEAD DRAIN TO HEAD AT 3RD LOCATIONS, 1/8"x1/2" LONG

#10 X 1-1/2" LG SS SMS TO SECURE BLADES TO THE HEAD

#10 X 1" LG SS FH SMS TO SECURE HEAD PLATE TO HEAD

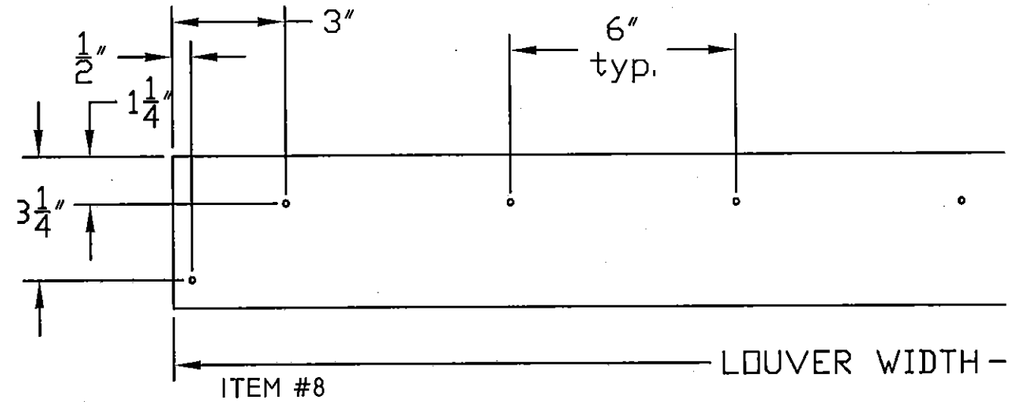

ITEM #8
1/8" THICK HEAD PLATE
SECURE TO LOUVER WITH #10 X 1" LG FH SS SMS

WELD EACH BLADE (BOTH SIDES) TO FRAME AT HEAD AND SILL, 1/8"x1/2" LONG

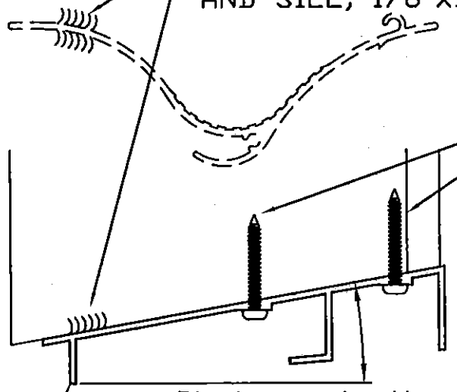

#10 X 1-1/2" LG SS SMS TO SECURE BLADES TO THE SILL SUB ANGLE

SILL SUB ANGLE

Blades get mitered to 10.0° and attached to sill sub angle

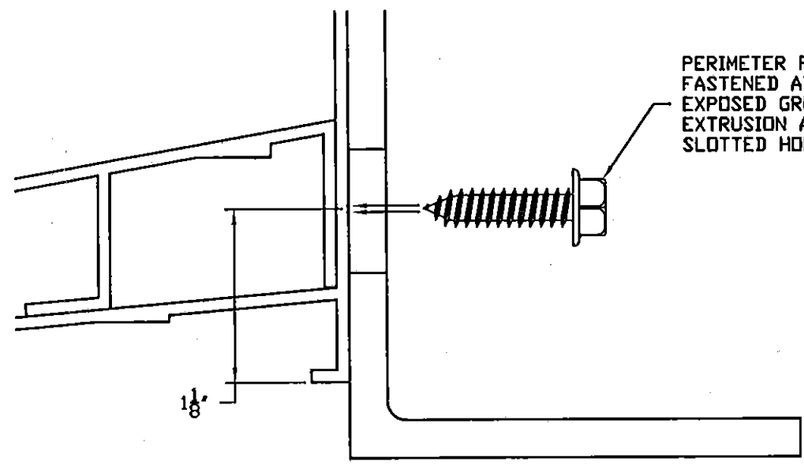

PERIMETER FASTENER TO BE FASTENED AT EITHER OF THE EXPOSED GROOVES OF SILL EXTRUSION AS VIEWED THROUGH SLOTTED HOLES

RIP RIGHT BLADE TO 1.8192

SILL CHANNEL

1/2"DIA HOLE AT 4" O.C.

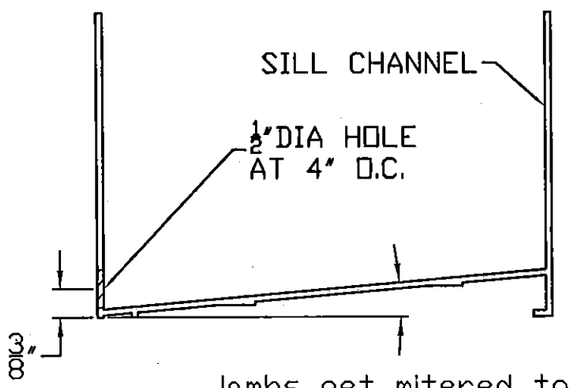

Jambs get mitered to 5.0° and attached to sill channel

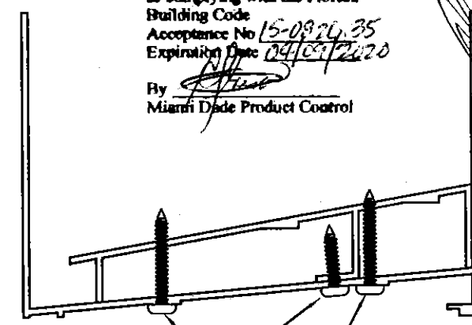

#10X3/4" LG SS SELF AT THIRD LOCATIONS.

#10 X 1-1/2" LG SS SMS TO SECURE THE JAMBS TO THE SILL CHANNEL

PRODUCT REVISED
as complying with the Florida Building Code
Acceptance No 15-0826.35
Expiration Date 04/09/2020
By
Miami Dade Product Control

JUL 21 2015

DAVID RICE LICENSE No. 50923 STATE OF FLORIDA PROFESSIONAL ENGINEER

RICE ENGINEERING
105 School Creek Trail
Luxemburg, WI 54217
Phone: 920.845.1042
Fax: 920.845.1048
www.rice-inc.com

Florida Firm No: F-01000005061
Certificate of Authorization: #9090
L. David Rice
Registration No: 50923

PROJECT: DC-6804 SUBMITTAL DRAWINGS
TITLE: DETAILS
SCALE: 3" = 1'
DRW BY: R. GEIST

REVISION: 1 6-25-15
DATE: 10-02-13
SHEET: 4 OF 6
DRW NO : RD-794-3

Construction Specialties™
49 MEEKER AVENUE, CRANFORD, NEW JERSEY
PHONE: 1-800-631-7379 / FAX: 908-272-5844

① - Head Drain

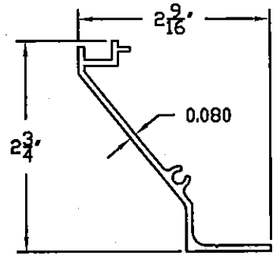

② - Head

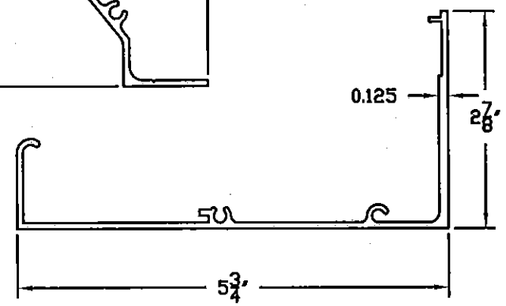

③ - Sill Channel

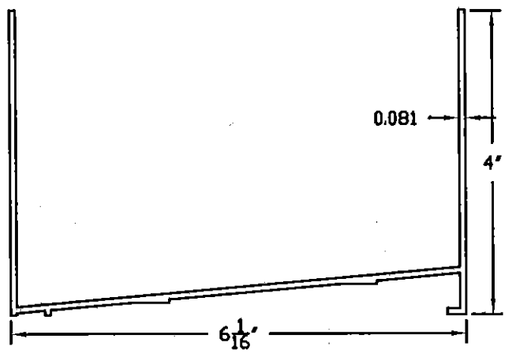

④ - Blade

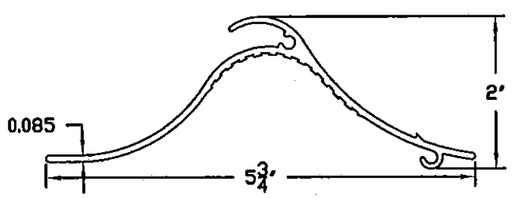

⑤ - Jamb

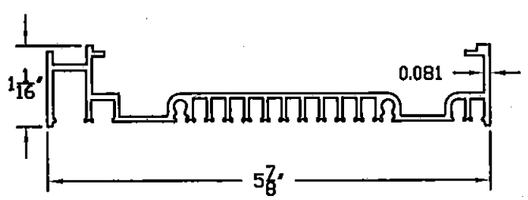

⑥ - Blade Stiffener Angle

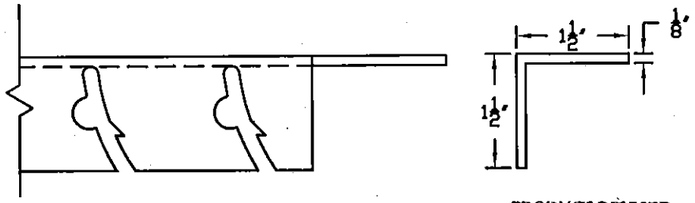

PRODUCT REVISED
as complying with the Florida
Building Code
Acceptance No 15-0826.05
Expiration Date 04/07/2020
By
Miami Dade Product Control

⑦ - Sill Sub Angle

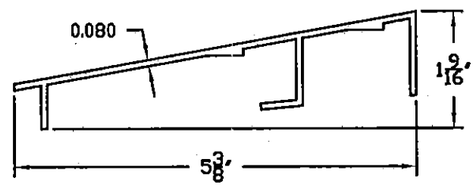

HOLE SIZE VARIES
SEE FASTENER
SCHEDULE
(TABLE 2)

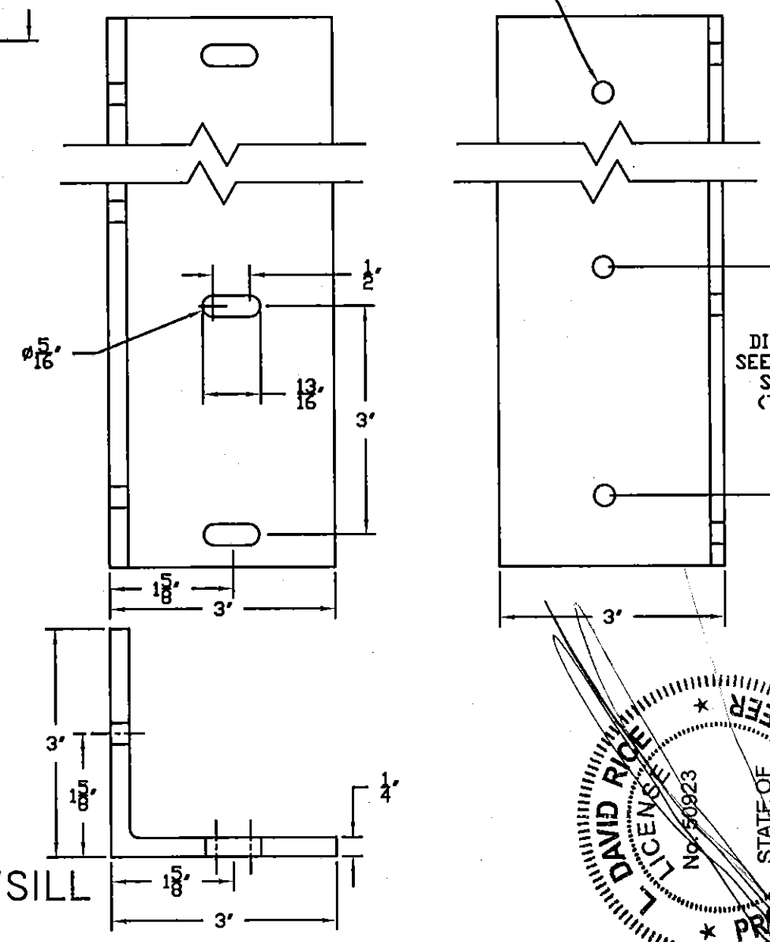

50 - HEAD/SILL ANGLE

RICE ENGINEERING
105 School Creek Trail
Luxemburg, WI 54217
Phone: 920.845.1042
Fax: 920.845.1048
www.rice-inc.com

Florida Firm No: F-01000005061
Certificate of Authorization: #9090
L. David Rice
Registration No: 50923

DAVID RICE LICENSE No. 50923 STATE OF FLORIDA PROFESSIONAL ENGINEER

JUL 21 2015

PROJECT: DC-6804 SUBMITTAL DRAWINGS	REVISION: 1 6-25-15
TITLE: PARTS	DATE: 10-02-13
SCALE: HALF SCALE	SHEET: 5 OF 6
DRW BY: R. GEIST	DRW NO: RD-794-4

Construction Specialties™
49 MEEKER AVENUE, CRANFORD, NEW JERSEY
PHONE: 1-800-631-7379 / FAX: 908-272-5844

TABLE 1 – PARTS LIST		
ITEM	PART	DESCRIPTION
1	HEAD DRAIN	6063-T6 ALUMINUM 0.080 THK
2	HEAD	6063-T6 ALUMINUM 0.125 THK
3	SILL CHANNEL	6063-T6 ALUMINUM 0.081 THK
4	BLADE	6063-T6 ALUMINUM 0.085 THK
5	JAMB	6063-T6 ALUMINUM 0.081 THK
6	BLADE STIFFENER ANGLE	1 1/2"x 1 1/2"x 1/8" CONT. ALUM ANGLE - 6061 T6
7	SILL SUB ANGLE	6063-T6 ALUMINUM 0.081 THK
8	HEAD PLATE	4"x0.125" ALUM SHEET
50	HEAD/SILL ANGLE	3"x3"x1/4" CONT. ALUM ANGLE - 6061 T6
71	CONCRETE	3000 PSI CONCRETE
72	CMU	GROUT FILLED CONCRETE MASONRY UNIT
73	STRUCTURAL STEEL	3/16" THK MIN. (A 36 MIN)
74	STEEL STUD	16 GA MIN. (FY = 33 KSI MIN.)
75	ALUMINUM	1/8" MIN. (FY = 25 KSI MIN.)
76	WOOD	G = 0.42 MIN.

PRODUCT REVISED
as complying with the Florida
Building Code
Acceptance No 15-0926.35
Expiration Date 04/09/2020
By
Miami Dade Product Control

NOTE:
ANGLES MUST FULLY BEAR AGAINST THE SUBSTRATE. THEY MAY NOT HANG OVER THE EDGE.

Fastener Schedule - (Table 2)

Part Num.	Fastener Description	Substrate	Screw Spacing	Min. Edge Dist.	Min. embed.
100	1/4"-14 SS or coated carbon steel self drilling or self tapping sheet metal screw	0.081 Aluminum Mullion (F_y = 25 Ksi min.)	3"	NA	NA
101	1/4"-14 SS Drillflex or equv. or coated carbon steel self drilling or self tapping sheet metal screw	16 Ga. min. Steel Stud (F_y = 33 Ksi min.)	1 1/2"	1/2"	NA
102	1/4"-14 SS Drillflex or equv. or coated carbon steel self drilling or self tapping sheet metal screw	3/16" min. Structural Steel (A 36 min.)	7"	1/2"	NA
103	1/2" Hilti Kwik Bolt 3	Grout Filled CMU, 2000 psi min.	3 3/4"	1 3/4"	2 1/4"
104	3/8" Dia Hilti HUS or equiv.	3000 psi Concrete min. (5" Min. conc.base)	6"	3"	3 1/4"
105	1/4"-14 SS Drillflex or equv. or coated carbon steel self drilling or self tapping sheet metal screw	Aluminum 1/8" Thk min. (F_y = 25 Ksi min.)	3"	1/2"	NA
106	1/4" SS or plated carbon steel wood screw	Wood 3" Thk min. (G = 0.42 min.)	2 1/2"	1"	2"

L. DAVID RICE
LICENSE No. 50923
STATE OF FLORIDA
PROFESSIONAL ENGINEER

JUL 21 2015

RICE ENGINEERING
105 School Creek Trail
Luxemburg, WI 54217
Phone: 920.845.1042
Fax: 920.845.1048
www.rice-inc.com
Florida Firm No: F-01000005061
Certificate of Authorization #9090
L. David Rice
Registration No 50923

Construction Specialties™
49 MEEKER AVENUE, CRANFORD, NEW JERSEY
PHONE: 1-800-631-7579 / FAX: 908-272-5844

PROJECT: DC-6804 SUBMITTAL DRAWINGS
TITLE: TABLES
SCALE: N/A
DRW BY: R. GEIST
REVISION: 1 6-25-15
DATE: 10-02-13
SHEET: 6 OF 6
DRW NO : RD-794-5