--*++++

MIAMI-DADE COUNTY

DEPARTMENT OF REGULATORY AND ECONOMIC RESOURCES (RER)
BOARD AND CODE ADMINISTRATION DIVISION

MIAMI-DADE COUNTY
PRODUCT CONTROL SECTION
11805 SW 26 Street, Room 208
T (786) 315-2590 F (786) 315-2599
www.miamidade.gov/economy

NOTICE OF ACCEPTANCE (NOA)

PGT Industries, Inc.
1070 Technology Drive
North Venice, FL 34275

SCOPE:

This NOA is being issued under the applicable rules and regulations governing the use of construction materials. The documentation submitted has been reviewed and accepted by Miami-Dade County RER - Product Control Section to be used in Miami Dade County and other areas where allowed by the Authority Having Jurisdiction (AHJ).

This NOA shall not be valid after the expiration date stated below. The Miami-Dade County Product Control Section (In Miami Dade County) and/or the AHJ (in areas other than Miami Dade County) reserve the right to have this product or material tested for quality assurance purposes. If this product or material fails to perform in the accepted manner, the manufacturer will incur the expense of such testing and the AHJ may immediately revoke, modify, or suspend the use of such product or material within their jurisdiction. RER reserves the right to revoke this acceptance, if it is determined by Miami-Dade County Product Control Section that this product or material fails to meet the requirements of the applicable building code.

This product is approved as described herein, and has been designed to comply with the Florida Building Code, including the High Velocity Hurricane Zone.

DESCRIPTION: Series "HR-5410" PVC Horizontal Rolling Window – N.I.

APPROVAL DOCUMENT: Drawing No. **MD-HR5410-01** titled "Horizontal Roller - NI", sheets 1 through 15 of 15, dated 05/15/15, prepared by manufacturer, signed and sealed by Anthony Lynn Miller, P.E., bearing the Miami-Dade County Product Control Approval stamp with the Notice of Acceptance number and approval date by the Miami-Dade County Product Control Section.

MISSILE IMPACT RATING: None

LABELING: Each unit shall bear a permanent label with the manufacturer's name or logo, city, state, model/series, and following statement: "Miami-Dade County Product Control Approved", unless otherwise noted herein.

RENEWAL of this NOA shall be considered after a renewal application has been filed and there has been no change in the applicable building code negatively affecting the performance of this product.

TERMINATION of this NOA will occur after the expiration date or if there has been a revision or change in the materials, use, and/or manufacture of the product or process. Misuse of this NOA as an endorsement of any product, for sales, advertising or any other purposes shall automatically terminate this NOA. Failure to comply with any section of this NOA shall be cause for termination and removal of NOA.

ADVERTISEMENT: The NOA number preceded by the words Miami-Dade County, Florida, and followed by the expiration date may be displayed in advertising literature. If any portion of the NOA is displayed, then it shall be done in its entirety.

INSPECTION: A copy of this entire NOA shall be provided to the user by the manufacturer or its distributors and shall be available for inspection at the job site at the request of the Building Official.

This NOA consists of this page 1 and evidence pages E-1 and E-2, as well as approval document mentioned above.

The submitted documentation was reviewed by **Manuel Perez, P.E.**

MIAMI-DADE COUNTY APPROVED

9/18/15

PGT Industries, Inc.

NOTICE OF ACCEPTANCE: EVIDENCE SUBMITTED

A. DRAWINGS

1. Manufacturer's die drawings and sections.
2. Drawing No. **MD-HR5410-01** titled "Horizontal Roller - NI", sheets 1 through 15 of 15, dated 05/15/15, prepared by manufacturer, signed and sealed by Anthony Lynn Miller, P.E.

B. TESTS

1. Test reports on: 1) Air Infiltration Test, per FBC, TAS 202-94
   2) Uniform Static Air Pressure Test, Loading per FBC TAS 202-94
   3) Water Resistance Test, per FBC, TAS 202-94
   4) Forced Entry Test, per FBC 2411.3.2.1, and TAS 202-94
   5) Large Missile Impact Test per FBC, TAS 201-94
   6) Cyclic Wind Pressure Loading per FBC, TAS 203-94

   along with marked-up drawings and installation diagram of series 5410 and series 5510 PVC horizontal sliding windows, prepared by Fenestration Testing Laboratory, Inc., Test Report No. **FTL-8072**, dated 02/03/15, signed and sealed by Idalmis Ortega, P.E.

C. CALCULATIONS

1. Anchor verification calculations and structural analysis, complying with **FBC-5th Edition (2014)**, dated 08/28/15, prepared by manufacturer, signed and sealed by Anthony Lynn Miller, P.E.
2. Glazing complies with **ASTM E1300-09**

D. QUALITY ASSURANCE

1. Miami-Dade Department of Regulatory and Economic Resources (RER).

Manuel Perez

Manuel Perez, P.E.
Product Control Examiner
NOA No. 15-0903.11
Expiration Date: September 24, 2020
Approval Date: September 24, 2015

NOTICE OF ACCEPTANCE: EVIDENCE SUBMITTED

E. MATERIAL CERTIFICATIONS

1. Notice of Acceptance No. **12-1120.02** issued to Royal Window and Door Profiles, Plant 13 for their "**White Rigid PVC Exterior Extrusions for Windows and Doors**" dated 02/28/13, expiring on 02/28/18.
2. Notice of Acceptance No. **14-0529.13** issued to Royal Window and Door Profiles, Plant 13 for their "**Bronze and Lighter Shades of Cap Coated Rigid PVC Exterior Extrusions for Windows and Doors**" dated 04/16/15, expiring on 04/16/20.
3. Notice of Acceptance No. **14-0529.14** issued to Royal Window and Door Profiles, Plant 13 for their "**Performance Core Rigid PVC Exterior Extrusions for Windows and Doors**" dated 04/16/15, expiring on 04/16/20.

F. STATEMENTS

1. Statement letter of conformance, complying with **FBC-5th Edition (2014)**, dated August 28, 2015, issued by manufacturer, signed and sealed by Anthony Lynn Miller, P.E.
2. Statement letter of no financial interest, dated August 28, 2015, issued by manufacturer, signed and sealed by Anthony Lynn Miller, P.E.
3. Proposal issued by Product Control, dated 8/27/14 and revised on 9/10/14, signed by Jaime Gascon, P.E. Supervisor, Product Control Section.

G. OTHERS

1. None.

Manuel Perez, P.E.
Product Control Examiner
NOA No. 15-0903.11
Expiration Date: September 24, 2020
Approval Date: September 24, 2015

DESIGN PRESSURE RATING	IMPACT RATING
VARIES PER REINFORCEMENT LEVEL, SEE SHEETS 6-8	NOT RATED FOR IMPACT RESISTANCE

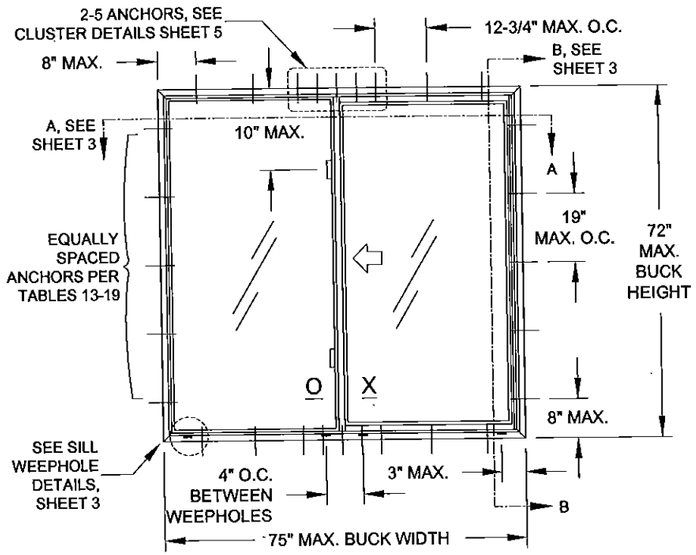

ELEVATION FOR TYP. EQUAL LEG FRAME SHOWN AS OX CONFIGURATION

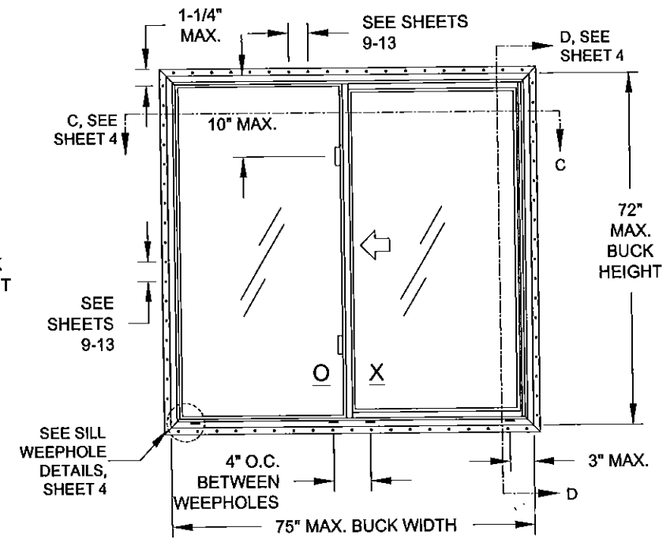

ELEVATION FOR TYP. FIN OR J-CHANNEL FRAME SHOWN AS OX CONFIGURATION ANCHORED THROUGH THE NAIL-FIN

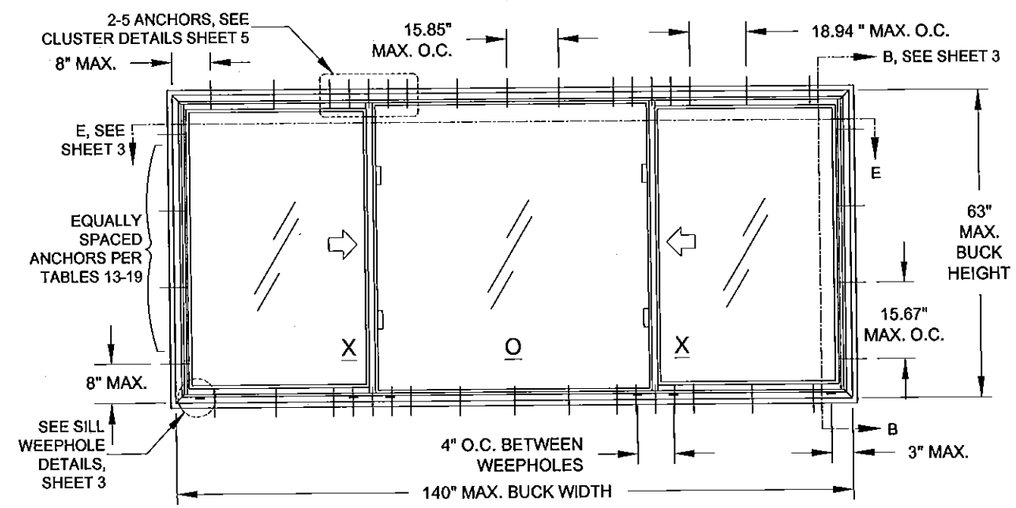

ELEVATION FOR TYP. FLANGE FRAME SHOWN AS XOX CONFIGURATION

GENERAL NOTES: SERIES 5410 NON-IMPACT RESISTANT HORIZONTAL ROLLER

1) THIS PRODUCT HAS BEEN DESIGNED & TESTED TO COMPLY WITH THE REQUIREMENTS OF THE FLORIDA BUILDING CODE, INCLUDING THE HIGH VELOCITY HURRICANE ZONE (HVHZ).
2) SHUTTERS ARE REQUIRED WHEN USED IN WIND-BORNE DEBRIS REGIONS.
3) FOR MASONRY APPLICATIONS IN MIAMI-DADE COUNTY, USE ONLY MIAMI-DADE COUNTY APPROVED MASONRY ANCHORS. MATERIALS USED FOR ANCHOR EVALUATIONS WERE SOUTHERN PINE, ASTM C90 CONCRETE MASONRY UNITS AND CONCRETE WITH MIN. KSI PER ANCHOR TYPE.
4) ALL WOOD BUCKS LESS THAN 1-1/2" THICK ARE TO BE CONSIDERED 1X INSTALLATIONS. 1X WOOD BUCKS ARE OPTIONAL IF UNIT IS INSTALLED DIRECTLY TO SUBSTRATE. WOOD BUCKS DEPICTED AS 2X ARE 1-1/2" THICK OR GREATER. 1X AND 2X BUCKS (WHEN USED) SHALL BE DESIGNED AND SECURED TO PROPERLY TRANSFER LOADS TO THE STRUCTURE. WOOD BUCK DESIGN AND INSTALLATION IS THE RESPONSIBILITY OF THE ENGINEER, (EOR) OR ARCHITECT OF RECORD, (AOR).
5) ANCHOR EMBEDMENT TO BASE MATERIAL SHALL BE BEYOND WALL DRESSING OR STUCCO. USE ANCHORS OF SUFFICIENT LENGTH TO ACHIEVE REQUIRED MIN. EMBEDMENT. INSTALLATION ANCHORS SHOULD BE SEALED. OVERALL SEALING/FLASHING STRATEGY FOR WATER RESISTANCE OF INSTALLATION SHALL BE DONE BY OTHERS AND IS BEYOND THE SCOPE OF THESE INSTRUCTIONS.
6) 1/4" MAX. SHIMS ARE REQUIRED AT EACH ANCHOR LOCATION WHERE THE PRODUCT IS NOT FLUSH TO THE SUBSTRATE. USE SHIMS CAPABLE OF TRANSFERRING APPLIED LOADS.
7) DESIGN PRESSURES:
   A. NEGATIVE DESIGN LOADS BASED ON STRUCTURAL TESTING AND GLASS PER ASTM E1300.
   B. POSITIVE DESIGN LOADS BASED ON WATER TEST PRESSURE, STRUCTURAL TESTING AND GLASS PER ASTM E1300.
8) THE ANCHORAGE METHODS SHOWN HAVE BEEN DESIGNED TO RESIST THE WINDLOADS CORRESPONDING TO THE REQUIRED DESIGN PRESSURE. THE 33-1/3% STRESS INCREASE HAS NOT BEEN USED IN THE DESIGN OF THIS PRODUCT. THE 1.6 LOAD DURATION FACTOR WAS USED FOR THE EVALUATION OF ANCHORS INTO WOOD. ANCHORS THAT COME INTO CONTACT WITH OTHER DISSIMILAR MATERIALS SHALL MEET THE REQUIREMENTS OF THE FLORIDA BUILDING CODE FOR CORROSION RESISTANCE.
9) METAL SUBSTRATE TO MEET MIN. STRENGTH AND THICKNESS REQUIREMENTS PER CURRENT FLORIDA BUILDING CODE AND TO BE REVIEWED BY THE AUTHORITY HAVING JURISDICTION.
10) REFERENCES: TEST REPORTS FTL-8072; ELCO ULTRACON NOA; ELCO CRETEFLEX NOA; ELCO AGGRE-GATOR NOA; ROYAL WINDOW AND DOOR PROFILES, LTD WHITE & BRONZE/LIGHTER SHADES OF CAP COATED PVC EXTRUSION NOA'S; NATIONAL DESIGN SPECIFICATION FOR WOOD CONSTRUCTION, ANSI/AF&PA NDS & ALUMINUM DESIGN MANUAL
11) APPLICABLE EGRESS REQUIREMENTS TO BE REVIEWED BY BUILDING OFFICIAL.

GENERAL NOTES..... 1
ELEVATIONS..... 1
FRAME, GLASS & ANCHOR OPTIONS..... 2
INSTALLATION, FLANGE & EQUAL LEG/BOX..... 3
INSTALLATION, INTEGRAL FIN & J-CHANNEL..... 4
GLAZING DETAILS..... 5
DESIGN PRESSURES..... 6-8
ANCHOR QUANTITIES..... 9-13
EXTRUSION PROFILES & BOM.... 14
ASSEMBLY..... 15

USER INSTRUCTIONS:

1) DETERMINE THE SITE SPECIFIC, WINDOW OPENING'S DESIGN PRESSURE REQUIREMENT USING WINDLOAD STANDARD ASCE 7.
2) KNOWING YOUR FRAME TYPE, WINDOW CONFIGURATION (OX, XO, XOX), SIZE, GLAZING OPTION FROM (TABLE 1) AND REINFORCEMENT LEVEL, DETERMINE YOUR WINDOW'S DESIGN PRESSURE REQUIREMENT FOR THE WINDOW OPENING USING TABLES 6-12 (SHEETS 6-8). IT MUST EQUAL OR EXCEED THE DESIGN PRESSURE REQUIREMENT FOR THE WINDOW OPENING OBTAINED IN STEP 1. USE INDEX TABLE 5 ON SHEET 6 TO HELP FIND THE APPROPRIATE TABLE.
3) DETERMINE THE MOST SUITABLE ANCHOR GROUP FROM TABLES 2 AND 3 ON SHEET 2 ACCORDING TO THE INSTALLATION CONDITIONS
4) DETERMINE THE ANCHOR QUANTITY FROM TABLES 13-19 (SHEETS 9-13), VERIFY THE ANCHOR/SUBSTRATE WILL MEET REQUIREMENTS FOR YOUR OPENING'S CONDITION FROM TABLES 2 OR 3, AND THAT ALL MIN. REQUIREMENTS FROM THIS SHEET-SET ARE MET.
5)INSTALL AS PER SHEET 3 FOR FLANGE/EQUAL LEG INSTALLATION OR SHEET 4 FOR INTEGRAL FIN/J-CHANNEL INSTALLATION. USE TABLE 4 ON SHEET 2 TO FIND THE APPROPRIATE DETAILS.

NOTE: DESIGN PRESSURE RATING DETERMINATION IS THE SAME PROCESS FOR ALL FRAME TYPES (J-CHANNEL, FLANGE, INTEGRAL FIN OR EQUAL LEG/BOX), SEE FIGURE B ON SHEET 2

ANTHONY LYNN MILLER
LICENSE
No. 58705
STATE OF FLORIDA
PROFESSIONAL ENGINEER
9/17/15
A. LYNN MILLER, P.E.
P.E.# 58705

PGT®
1070 TECHNOLOGY DRIVE
N. VENICE, FL 34275
P.O. BOX 1529
NOKOMIS, FL 34274
CERT. OF AUTH. #29296

Revised By:	Date:	Revision:
Revised By:	Date:	Revision:

Approved as complying with the Florida Building Code
Date Sept. 24 2015
NOA# 15-0403.11
Miami Dade Product Control
By Manuel Perez

Description:	Drawn By:
GENERAL NOTES & ELEVATION	J ROSOWSKI

Title:	Date:
HORIZONTAL ROLLER - NI	05/15/15

Series/Model:	Scale:	Sheet:	Drawing No.	Rev:
HR-5410	NTS	1 OF 15	MD-HR5410-01	

TABLE 1: ALLOWABLE GLASS TYPES

Glass Type	Description (Listed from Exterior to Interior)
1	3/4" I.G.: 1/8" A Exterior Cap + 1/2" Air Space + 1/8" A Exterior Cap
2	3/4" I.G.: 1/8" T Exterior Cap + 1/2" Air Space + 1/8" T Exterior Cap
3	3/4" I.G.: 3/16" A Exterior Cap + 3/8" Air Space + 3/16" A Exterior Cap
4	3/4" I.G.: 3/16" T Exterior Cap + 3/8" Air Space + 3/16" T Exterior Cap

SEE SHEET 6, TABLE 5 FOR GLAZING/DESIGN PRESSURE/ANCHORAGE INDEX.

! GLASS TYPES 1 & 3 MAY NOT BE USED IN THE HVHZ ABOVE 30'.

TABLE 2: ALLOWABLE ANCHORS THROUGH THE FRAME

Group	Anchor	Substrate	Min. Edge Distance	Min. Embedment*
A	#10 SMS (steel, 18-8 S.S. or 410 S.S.)	P.T. Southern Pine (SG=0.55)	7/16"	1-3/8"
		Steel, A36*	3/8"	0.050"
		Steel Stud, A653 Gr. 33*	3/8"	0.0451" (18 Ga.)
		Aluminum, 6063-T5*	3/8"	0.050"
	3/16" steel Ultracon	P.T. Southern Pine (SG=0.55)	7/16"	1-3/8"
		Concrete (min. 2.85 ksi)	1"	1-3/8"
		Ungrouted CMU, (ASTM C-90)	2-1/2"	1-1/4"
B	#12 SMS (steel, 18-8 S.S. or 410 S.S.)	P.T. Southern Pine (SG=0.55)	9/16"	1-3/8"
		Steel, A36*	3/8"	0.050"
		Steel Stud, A653 Gr. 33*	3/8"	0.0451" (18 Ga.)
		Aluminum, 6063-T5*	3/8"	0.063"
C	1/4" steel Ultracon	Concrete (min. 2.85 ksi)	1"	1-3/4"
		Ungrouted CMU, (ASTM C-90)	2-1/2"	1-1/4"
	1/4" steel Creteflex	Concrete (min. 3.35 ksi)	1"	1-3/4"
D	1/4" steel Ultracon	Concrete (min. 2.85 ksi)	2-1/2"	1-3/4"
	1/4" steel Ultracon	P.T. Southern Pine (SG=0.55)	1"	1-3/8"
	1/4" steel Creteflex	Concrete (min. 3.35 ksi)	2-1/2"	1-3/4"
	1/4" steel Creteflex	Ungrouted CMU, (ASTM C-90)	2-1/2"	1-1/4"
		P.T. Southern Pine (SG=0.55)	1"	1-3/8"
	1/4" steel Aggre-Gator	Concrete (min. 3.275 ksi)	1-1/2"	1-3/8"
	1/4" steel Aggre-Gator	P.T. Southern Pine (SG=0.55)	1"	1-3/8"
		Grouted CMU, (ASTM C-90)	2"	2"

* MIN. OF 3 THREADS BEYOND THE METAL SUBSTRATE. FOR STEEL STUDS, MIN. Fu=45 KSI & MIN. Fy=33 KSI.

"UNGROUTED CMU" VALUES MAY BE USED FOR GROUTED CMU APPLICATIONS.

TABLE 3: ALLOWABLE ANCHORS THROUGH THE INTEGRAL FIN

Group	Anchor	Substrate	Min. Edge Distance	Min. Embedment*
E	2-1/2" x .131" Common Nail	P.T. Southern Pine (SG=0.55)	3/8"	2-7/16"
F	2-1/2" Ring-shank Roofing Nail	P.T. Southern Pine (SG=0.55)	3/8"	2-7/16"
	#10 Trusshead SMS (steel, 18-8 S.S. or 410 S.S.)	P.T. Southern Pine (SG=0.55)	1/2"	1-3/8"
		Aluminum, 6063-T5*	3/8"	0.050"
		Steel Stud, Gr. 33*	3/8"	0.0451" (18 Ga.)
		Steel, A36*	3/8"	0.050"
	#12 SMS (steel, 18-8 S.S. or 410 S.S.)	P.T. Southern Pine (SG=0.55)	9/16"	1-3/8"
		Aluminum, 6063-T5*	3/8"	0.063"
		Steel Stud, Gr. 33*	3/8"	0.050"
		Steel, A36*	3/8"	0.050"

* MIN. OF 3 THREADS BEYOND THE METAL SUBSTRATE. FOR STEEL STUDS, MIN. Fu=45 KSI & MIN. Fy=33 KSI.

TABLE 4: INDEX OF INSTALLATION METHODS PER FRAME TYPE

Frame Types (see Fig B)	Glass Options (see Table 1)	Installation Conditions	Substrate Option Detail Sheet
J-Channel (#1)	1 - 4	Through the integral fin.....	....into 2X Wood Frame/Buckstrip - sheet 4, option 5
			....into Metal - sheet 4, option 8
		Through the frame of the window.....	....into 2X Wood Frame/Buckstrip - sheet 4, option 6
			....into Metal - sheet 4, option 7
Flange (#2)	1 - 4	Through the frame of the window.....	....into 2X Wood Frame/Buckstrip - sheet 3, option 1
			....into Concrete/CMU - sheet 3, option 2
			....through 1X Buckstrip into Concrete/CMU - sheet 3, option 3
			....into Metal - sheet 3, option 4
Integral Fin (#3)	1 - 4	Through the integral fin.....	....into 2X Wood Frame/Buckstrip - sheet 4, option 5
			....into Metal - sheet 4, option 8
		Through the frame of the window.....	....into 2X Wood Frame/Buckstrip - sheet 4, option 6
			....into Metal - sheet 4, option 7
Box / Equal-Leg (#4)	1 - 4	Through the frame of the window.....	....into 2X Wood Frame/Buckstrip - sheet 3, option 1
			....into Concrete/CMU - sheet 3, option 2
			....through 1X Buckstrip into Concrete/CMU - sheet 3, option 3
			....into Metal - sheet 3, option 4

FIGURE B: FRAME TYPES

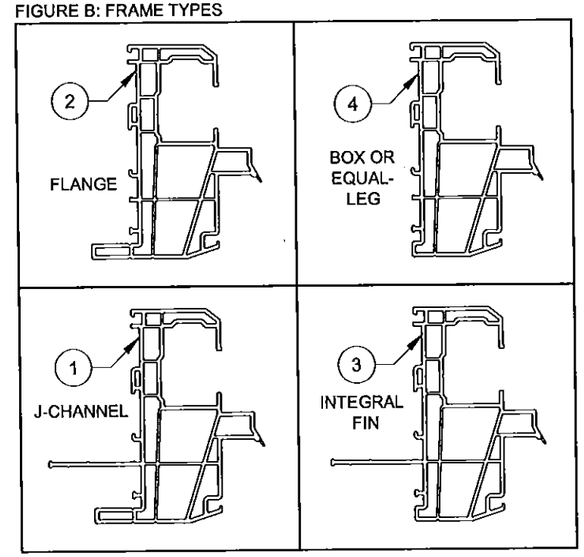

INSTALLATION NOTES, SEE SHEETS 3 & 4 FOR ILLUSTRATIONS:

1) USE ONLY SUBSTRATE-APPROPRIATE ANCHORS LISTED ON TABLES 2 & 3, THIS SHEET. FOLLOW EMBEDMENT AND EDGE DISTANCE LIMITS. ANY INSTALLATION OPTION SHOWN MAY BE USED ON ANY SIDE OF THE WINDOW.

2) MASONRY ANCHORS MAY BE USED INTO WOOD AS PER TABLE 2, THIS SHEET. ALL WOOD BUCKS LESS THAN 1-1/2" THICK ARE TO BE CONSIDERED 1X INSTALLATIONS. 1X WOOD BUCKS ARE OPTIONAL IF UNIT IS INSTALLED DIRECTLY TO SUBSTRATE. WOOD BUCKS DEPICTED AS 2X ARE 1-1/2" THICK OR GREATER. 1X AND 2X BUCKS (WHEN USED) SHALL BE DESIGNED TO PROPERLY TRANSFER LOADS TO THE STRUCTURE. WOOD BUCK DESIGN AND INSTALLATION IS THE RESPONSIBILITY OF THE ENGINEER OR ARCHITECT OF RECORD.

3) VISIBLE LIGHT WIDTH OR HEIGHT (ALSO REFERRED TO AS DAYLIGHT OPENING) IS MEASURED FROM BEADING TO BEADING.

4) SEE SHEET 14 FOR OPTIONAL EGRESS LOCK DETAILS.

ANTHONY LYNN MILLER
LICENSE
No. 58705
STATE OF FLORIDA
PROFESSIONAL ENGINEER
9/17/15
A. LYNN MILLER, P.E.
P.E.# 58705

PGT®
1070 TECHNOLOGY DRIVE
N. VENICE, FL 34275
P.O. BOX 1529
NOKOMIS, FL 34274
CERT. OF AUTH. #29296

Approved as complying with the Florida Buiding Code
Date Sept. 24, 2015
NOA# 15-0903.11
Miami Dade Product Control
By Manuel Perez

Revised By:	Date:	Revision:
Revised By:	Date:	Revision:

Description: GLASS/ANCHORS/FRAME OPTIONS
Drawn By: J ROSOWSKI
Title: HORIZONTAL ROLLER - NI
Date: 05/15/15
Series/Model: HR-5410
Scale: NTS
Sheet: 2 OF 15
Drawing No. MD-HR5410-01
Rev:

INSTALLATION DETAILS FOR FLANGE AND EQUAL-LEG FRAMES

INSTALLATION OPTION 1

ANCHORED THROUGH FRAME INTO 2X WOOD FRAME OR BUCKSTRIP. SEE NOTE 2, SHEET 2.

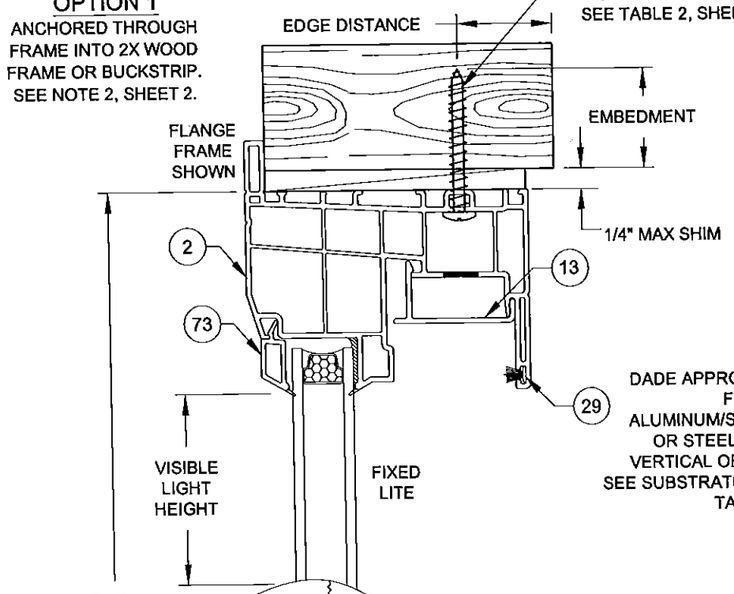

INSTALLATION OPTION 4

ANCHORED THROUGH FRAME INTO METAL

SEE INSTALLATION NOTES SHEET 2

INSTALLATION OPTION 3

ANCHORED THROUGH FRAME AND 1X BUCKSTRIP INTO CONCRETE/CMU. SEE NOTE 2, SHEET 2.

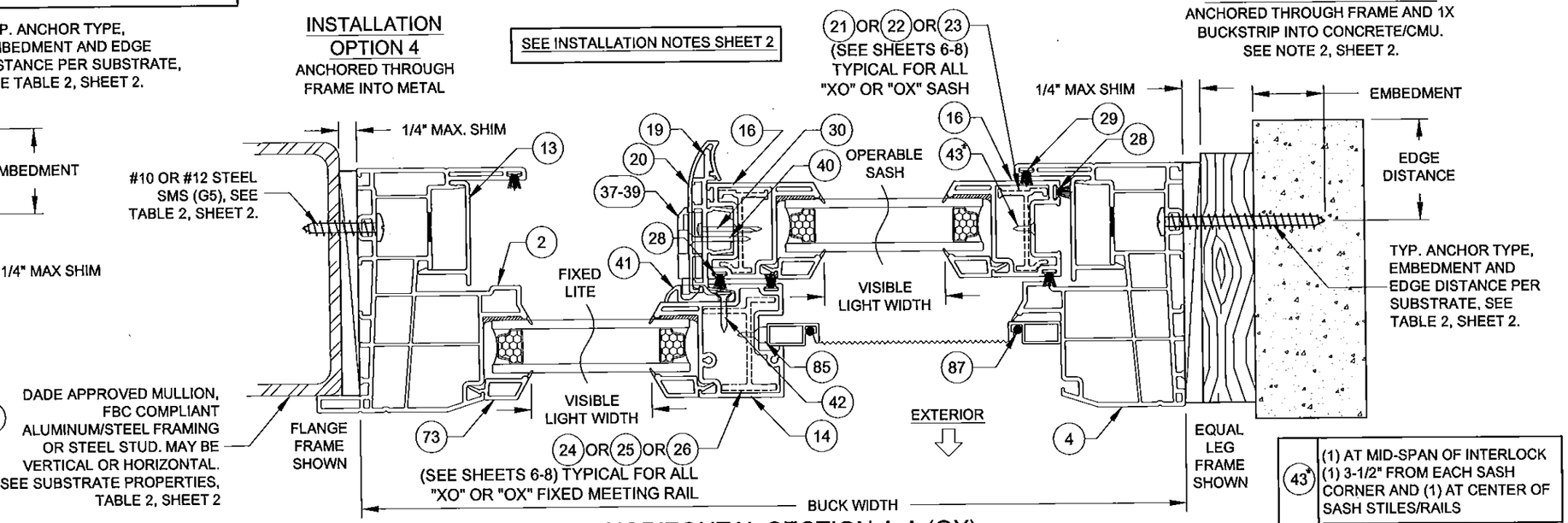

HORIZONTAL SECTION A-A (OX)

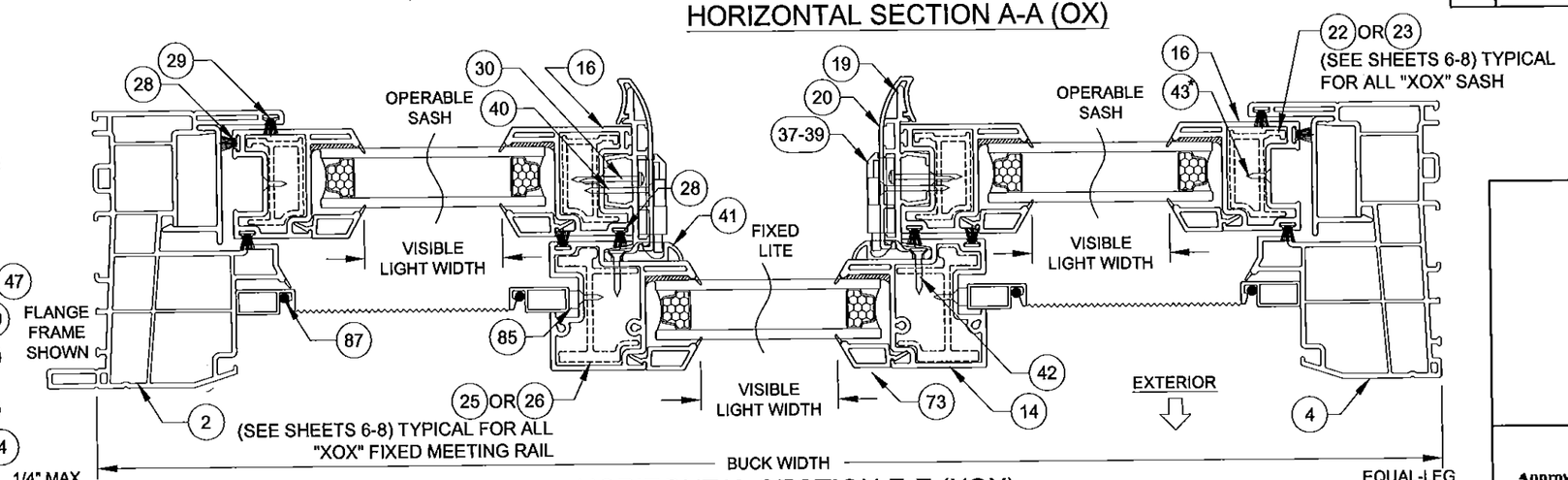

HORIZONTAL SECTION E-E (XOX)

INSTALLATION AS PER SECTION A-A ABOVE

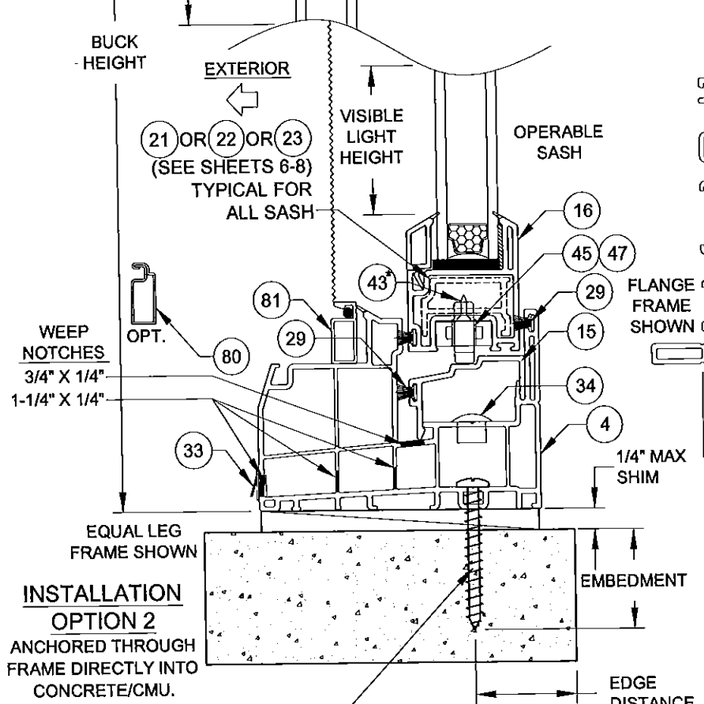

INSTALLATION OPTION 2

ANCHORED THROUGH FRAME DIRECTLY INTO CONCRETE/CMU.

VERTICAL SECTION B-B

VISIBLE LIGHT FORMULAS (EQUAL-LITE, XO & OX)

WIDTH: BUCK WIDTH / 2 - 4-1/4"
HEIGHT: BUCK HEIGHT - 7-1/4"

ANTHONY LYNN MILLER LICENSE No. 58705 STATE OF FLORIDA PROFESSIONAL ENGINEER
9/17/15
A. LYNN MILLER, P.E.
P.E.# 58705

PGT®
1070 TECHNOLOGY DRIVE
N. VENICE, FL 34275
P.O. BOX 1529
NOKOMIS, FL 34274
CERT. OF AUTH. #29296

Revised By:	Date:	Revision:
Revised By:	Date:	Revision:

Approved as complying with the Florida Building Code
Date Sept. 24, 2015
NOA# 15-0903.11
Miami Dade Product Control
By Manuel Perez

Description:	Drawn By:
FLANGE & EQUAL-LEG/BOX FRAMES	J ROSOWSKI
Title: HORIZONTAL ROLLER - NI	Date: 05/15/15

Series/Model:	Scale:	Sheet:	Drawing No.	Rev:
HR-5410	NTS	3 OF 15	MD-HR5410-01	

INSTALLATION DETAILS FOR FIN AND J-CHANNEL FRAMES

INSTALLATION OPTION 5

ANCHORED THROUGH INTEGRAL FIN INTO 2X WOOD FRAME OR BUCK-STRIP. SEE NOTE 2, SHEET 2.

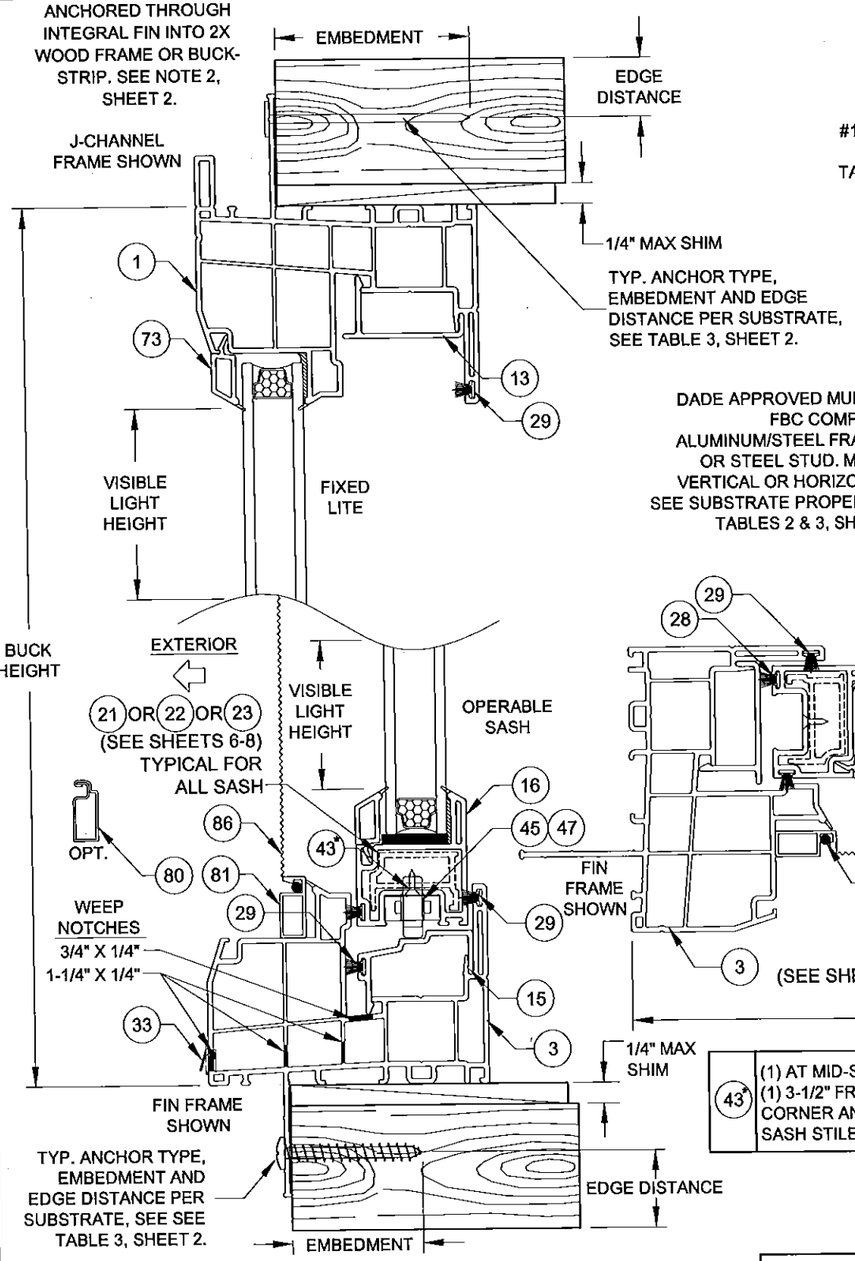

INSTALLATION OPTION 5

ANCHORED THROUGH INTEGRAL FIN INTO 2X WOOD FRAME OR BUCK-STRIP. SEE NOTE 2, SHEET 2.

VERTICAL SECTION D-D

INSTALLATION OPTION 7

ANCHORED THROUGH FRAME INTO METAL (INTEGRAL FIN/FLANGE REMOVED)

SEE INSTALLATION NOTES SHEET 2

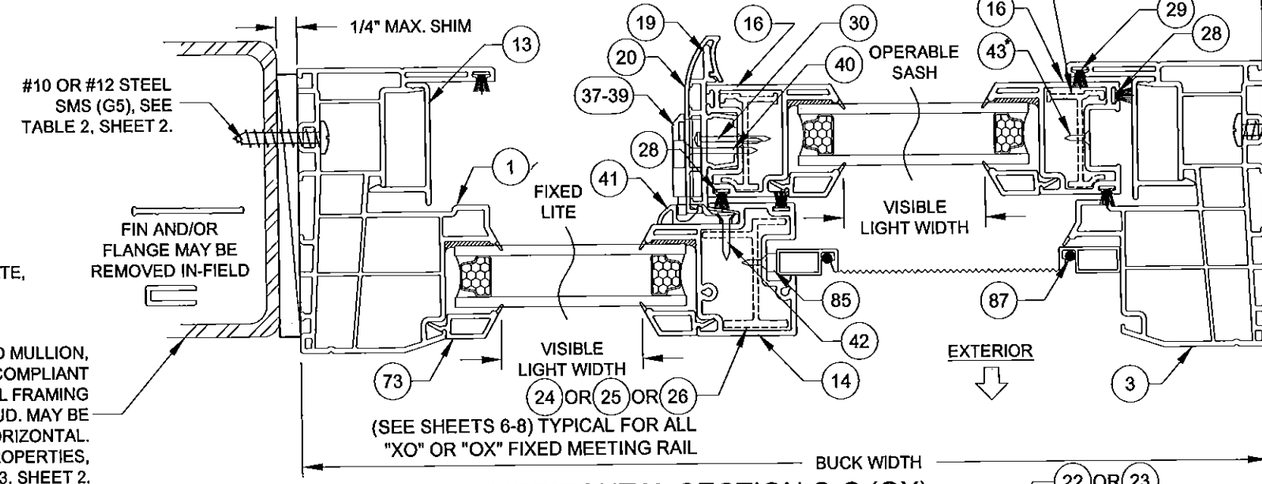

HORIZONTAL SECTION C-C (OX)

INSTALLATION OPTION 6

ANCHORED THROUGH FRAME INTO 2X WOOD FRAME OR BUCKSTRIP. SEE NOTE 2, SHEET 2.

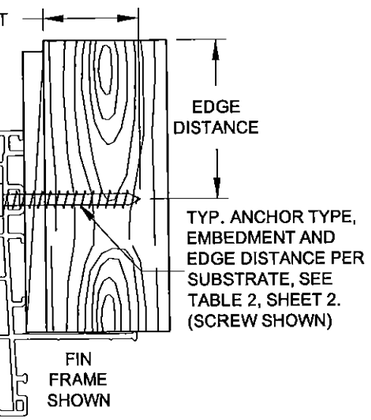

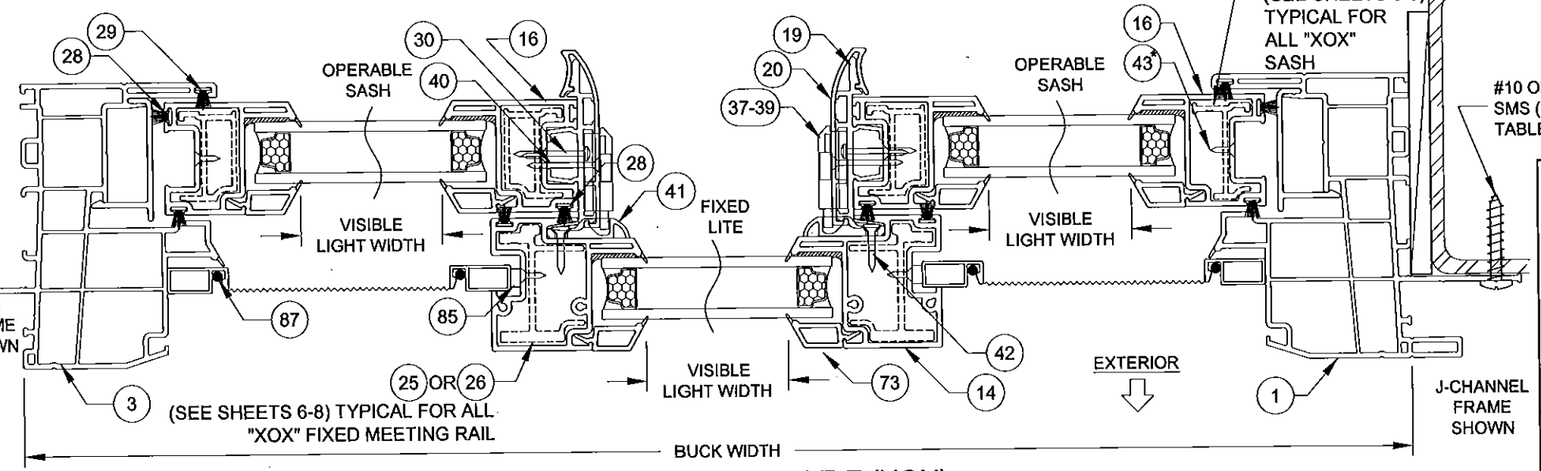

HORIZONTAL SECTION F-F (XOX)

INSTALLATION AS PER SECTION D-D ABOVE

INSTALLATION OPTION 8

ANCHORED THROUGH FIN INTO METAL (FLANGE MAY BE REMOVED)

43*	(1) AT MID-SPAN OF INTERLOCK (1) 3-1/2" FROM EACH SASH CORNER AND (1) AT CENTER OF SASH STILES/RAILS

VISIBLE LIGHT FORMULAS (EQUAL-LITE, XO & OX)

WIDTH: BUCK WIDTH / 2 - 4-1/4"
HEIGHT: BUCK HEIGHT - 7-1/4"

ANTHONY LYNN MILLER LICENSE No. 58705 STATE OF FLORIDA PROFESSIONAL ENGINEER
A. LYNN MILLER, P.E.
P.E.# 58705

PGT®
1070 TECHNOLOGY DRIVE
N. VENICE, FL 34275
P.O. BOX 1529
NOKOMIS, FL 34274
CERT. OF AUTH. #29296

Approved as complying with the Florida Building Code
Date Sept. 9A 2015
NOA# 15-0903.11
Miami Dade Product Control
By Manuel Perez

Revised By:	Date:	Revision:
Revised By:	Date:	Revision:

Description: J-CHANNEL & INTEGRAL FIN FRAMES			Drawn By: J ROSOWSKI	
Title: HORIZONTAL ROLLER - NI			Date: 05/15/15	
Series/Model: HR-5410	Scale: NTS	Sheet: 4 OF 15	Drawing No. MD-HR5410-01	Rev:

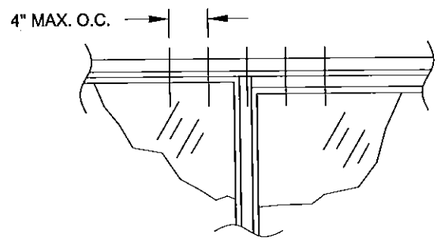

5-ANCHOR CLUSTER DETAIL

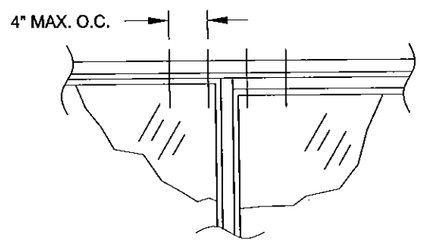

4-ANCHOR CLUSTER DETAIL

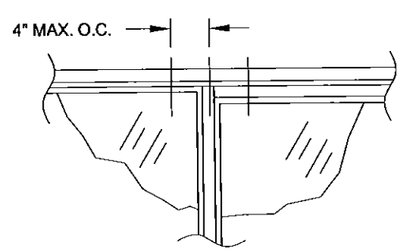

3-ANCHOR CLUSTER DETAIL

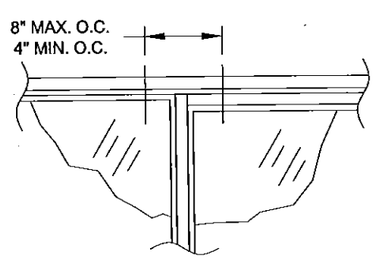

2-ANCHOR CLUSTER DETAIL

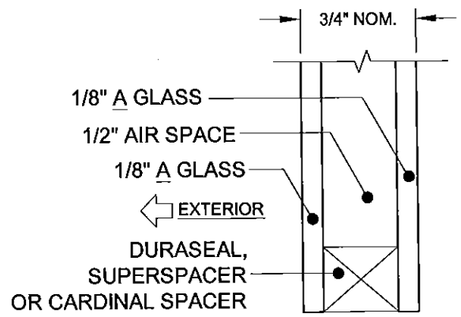

GLASS TYPE 1

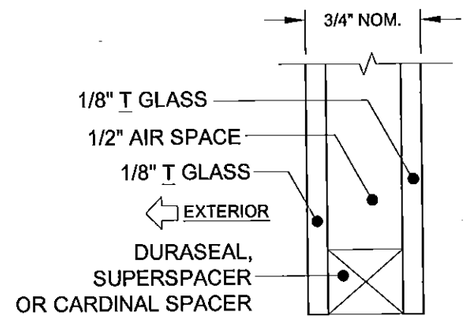

GLASS TYPE 2

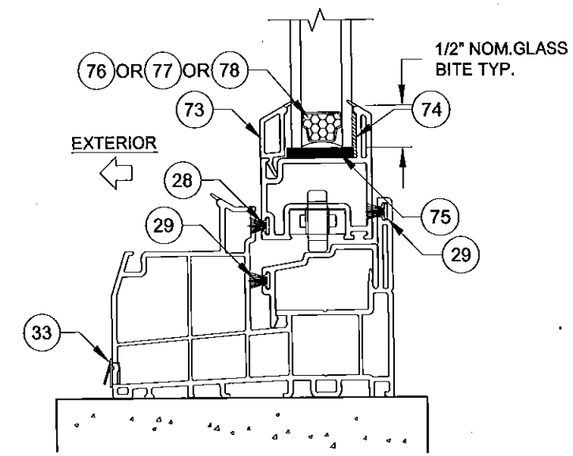

TYP. GLAZING DETAIL

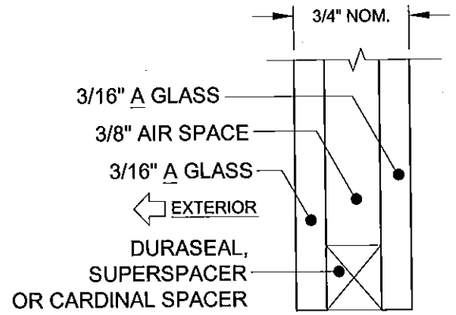

GLASS TYPE 3

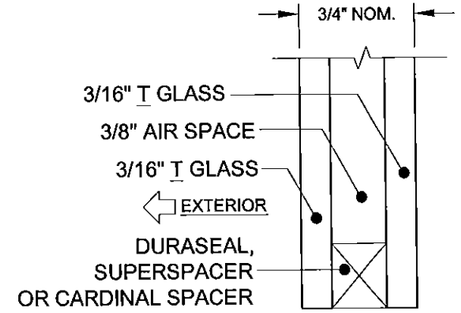

GLASS TYPE 4

GLAZING NOTES:
"A" = ANNEALED
"T" = TEMPERED

ANTHONY LYNN MILLER
LICENSE
No. 58705
STATE OF FLORIDA
PROFESSIONAL ENGINEER
9/17/15

A. LYNN MILLER, P.E.
P.E.# 58705

PGT®

1070 TECHNOLOGY DRIVE
N. VENICE, FL 34275
P.O. BOX 1529
NOKOMIS, FL 34274

CERT. OF AUTH. #29296

Approved as complying with the Florida Building Code
Date Sept. 24, 2015
NOA# 15-0905.11
Miami Dade Product Control
By

Revised By:	Date:	Revision:
Revised By:	Date:	Revision:

Description: GLAZING DETAILS	Drawn By: J ROSOWSKI
Title: HORIZONTAL ROLLER WINDOW - NI	Date: 05/15/15

Series/Model:	Scale:	Sheet:	Drawing No.	Rev:
HR-5410	NTS	5 OF 15	MD-HR5410-01	

TABLE 5:

Index to All Design Pressure and Anchor Quantity Tables								
Config.	Max. Width	Max. Height	Glass Type	Reinf. Level	Design Pressure		Anchor Quantity	
					Table #	Page #	Table #	Page #
XO or OX	75"	54"	1	1	6	6	13	9
		54"		2	7	6	14	9
		63"		3	10	7	15	10
	75"	54"	2 - 4	1	6	6	13	9
		54"		2	7	6	14	9
		63"		3	10	7	15	10
		72"		4	11	8	16	10
XOX	120"	63"	1	3	8	7	17	11
	140"	63"	2 - 4	3	9	7	18	12
				4	12	8	19	13

TABLE 6:

Glass Types 1 - 4	Design Pressure (lbs/ft^2) for XO or OX Windows								
Reinf. Level R1		Window Buck Height							
		30"		36"		48"		54"	
Window Buck Width	25-1/2"	+65.0	-100.0	+65.0	-100.0	+65.0	-100.0	+65.0	-100.0
	28"	+65.0	-100.0	+65.0	-100.0	+65.0	-100.0	+65.0	-100.0
	36"	+65.0	-100.0	+65.0	-100.0	+65.0	-94.2	+65.0	-81.6
	42"	+65.0	-100.0	+65.0	-100.0	+65.0	-83.9	+65.0	-72.4
	48"	+65.0	-100.0	+65.0	-100.0	+65.0	-76.5	+65.0	-65.6
	60"	+65.0	-100.0	+65.0	-100.0	+65.0	-66.8	+56.5	-56.5
	75"	+65.0	-100.0	+65.0	-94.9	+60.3	-60.3	+50.0	-50.0

SEE TABLE 13 FOR ANCHORAGE

TABLE 7:

Glass Types 1 - 4	Design Pressure (lbs/ft^2) for XO or OX Windows								
Reinf. Level R2		Window Buck Height							
		30"		36"		48"		54"	
Window Buck Width	25-1/2"	+65.0	-130.0	+65.0	-130.0	+65.0	-130.0	+65.0	-130.0
	28"	+65.0	-130.0	+65.0	-130.0	+65.0	-130.0	+65.0	-130.0
	36"	+65.0	-130.0	+65.0	-130.0	+65.0	-116.5	+65.0	-109.5
	42"	+65.0	-130.0	+65.0	-130.0	+65.0	-91.7	+65.0	-82.4
	48"	+65.0	-130.0	+65.0	-129.4	+65.0	-85.9	+65.0	-72.6
	60"	+65.0	-130.0	+65.0	-114.8	+65.0	-83.5	+65.0	-71.8
	75"	+65.0	-109.5	+65.0	-94.9	+65.0	-72.9	+65.0*	-65.5*

* +65/-70 FOR GLASS TYPES 2-4

SEE TABLE 14 FOR ANCHORAGE

SECTION DETAIL FOR WINDOWS WITH LEVEL R1 REINFORCEMENT

(REINFORCEMENTS SHOWN IN FIGURES APPLY TO ALL FRAME TYPES & CONFIGURATIONS)

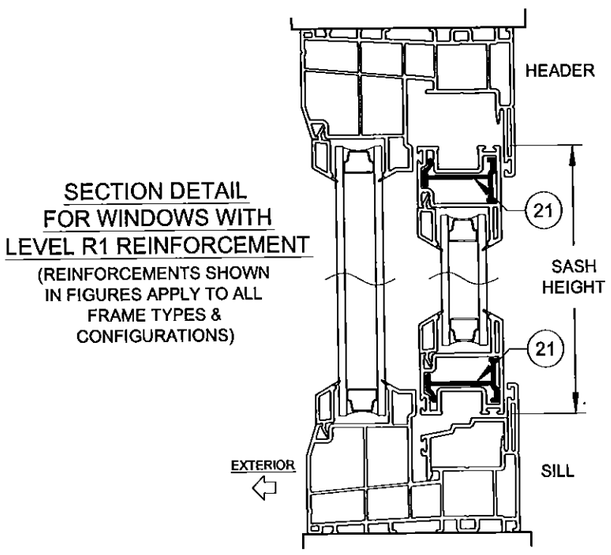

SECTION DETAIL FOR WINDOWS WITH LEVEL R2 REINFORCEMENT

(REINFORCEMENTS SHOWN IN FIGURES APPLY TO ALL FRAME TYPES & CONFIGURATIONS)

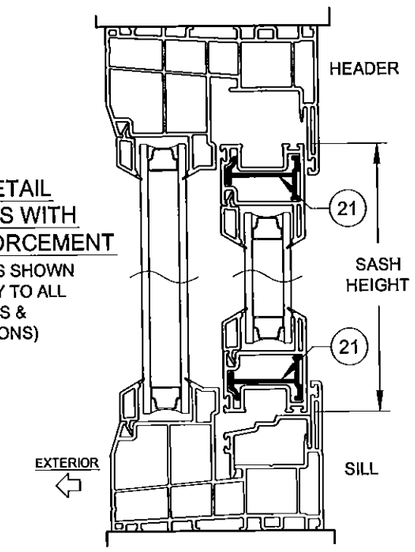

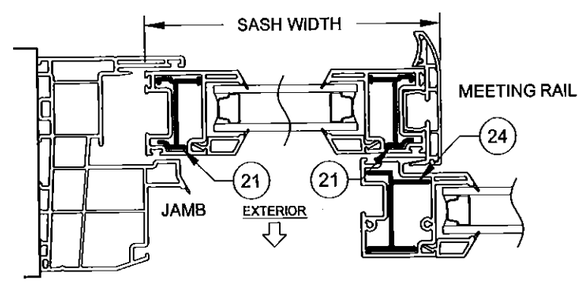

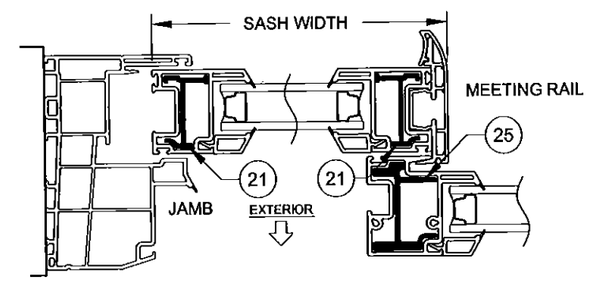

NOTES:
1) USE THESE TABLES FOR ALL WINDOWS INSTALLED THROUGH THE FRAME OR INTEGRAL FIN.
2) FRAME DIMENSIONS ARE BUCK WIDTH AND BUCK HEIGHT (SEE SHEETS 3-4). SASH SIZE IS AS PER THE FIGURE.
3) FOR SIZES NOT SHOWN, ROUND UP TO THE NEXT AVAILABLE WIDTH OR HEIGHT DIMENSION SHOWN ON THE TABLE.
4) "1/4-1/2-1/4" AND "1/3-1/3-1/3" INDICATE THAT THOSE STANDARD SASH CONFIGURATIONS FALL WITHIN THE SASH WIDTH RANGE IN THE ADJACENT COLUMN. "CUSTOM" INDICATES THAT NO STANDARD SASH CONFIGURATIONS FALL WITHIN THE RANGE

ANTHONY LYNN MILLER
LICENSE
No. 58705
STATE OF FLORIDA
PROFESSIONAL ENGINEER
9/17/15
A. LYNN MILLER, P.E.
P.E.# 58705

PGT®
1070 TECHNOLOGY DRIVE
N. VENICE, FL 34275
P.O. BOX 1529
NOKOMIS, FL 34274
CERT. OF AUTH. #29296

Approved as complying with the Florida Building Code
Date Sept. 24 2015
NOA# 15-0903.11
Miami Dade Product Control
By Manuel Perez

Revised By:	Date:	Revision:
Revised By:	Date:	Revision:

Description: DESIGN PRESSURE TABLES

Drawn By: J ROSOWSKI

Title: HORIZONTAL ROLLER - NI

Date: 05/15/15

Series/Model:	Scale:	Sheet:	Drawing No.	Rev:
HR-5410	NTS	6 OF 15	MD-HR5410-01	

TABLE 8:

Glass Type 1 / Reinf. Level R3	Sash Configuration	Sash Width Range (in)	Design Pressure (lbs/ft²) for XOX Windows — Window Buck Height 30"		36"		48"		54"		63"	
Window Buck Width 35-1/4"	⅓-⅓-⅓	11.391 - 11.391	+65.0	-100.0	+65.0	-100.0	+65.0	-100.0	+65.0	-100.0	+65.0	-93.0
38"	⅓-⅓-⅓	12.308 - 12.308	+65.0	-100.0	+65.0	-100.0	+65.0	-100.0	+65.0	-100.0	+65.0	-100.0
45-1/8"	¼-½-¼	11.391 - 13.397	+65.0	-100.0	+65.0	-100.0	+65.0	-89.0	+65.0	-77.9	+65.0	-69.5
	⅓-⅓-⅓	13.398 - 14.683	+65.0	-100.0	+65.0	-100.0	+65.0	-100.0	+65.0	-100.0	+65.0	-96.5
47-3/4"	¼-½-¼	11.391 - 12.297	+65.0	-100.0	+65.0	-100.0	+65.0	-85.6	+65.0	-72.2	+59.6	-59.6
	⅓-⅓-⅓	12.298 - 15.558	+65.0	-100.0	+65.0	-100.0	+65.0	-87.2	+65.0	-74.9	+65.0	-65.9
52-1/8"	Custom	11.391 - 12.016	+65.0	-100.0	+65.0	-100.0	+65.0	-84.4	+65.0	-71.8	+56.3	-56.3
	¼-½-¼	12.017 - 13.397	+65.0	-100.0	+65.0	-100.0	+65.0	-85.0	+65.0	-71.8	+56.1	-56.1
	⅓-⅓-⅓	13.398 - 17.016	+65.0	-100.0	+65.0	-100.0	+65.0	-85.4	+65.0	-72.0	+58.7	-58.7
60"	Custom	11.391 - 13.397	+65.0	-100.0	+65.0	-96.9	+65.0	-73.9	+65.0	-66.6	+55.9	-55.9
	¼-½-¼	13.398 - 15.360	+65.0	-100.0	+65.0	-100.0	+65.0	-80.8	+65.0	-70.7	+57.6	-57.6
	⅓-⅓-⅓	15.361 - 19.641	+65.0	-100.0	+65.0	-100.0	+65.0	-84.5	+65.0	-71.8	+56.3	-56.3
75"	¼-½-¼	17.141 - 19.110	+65.0	-100.0	+65.0	-89.3	+65.0	-68.8	+61.4	-61.4	+52.5	-52.5
	⅓-⅓-⅓	19.111 - 24.641	+65.0	-100.0	+65.0	-98.1	+65.0	-74.5	+65.0	-67.2	+56.1	-56.1
96"	⅓-⅓-⅓	27.641 - 32.516	+65.0	-100.0	+65.0	-89.3	+65.0	-68.8	+61.4	-61.4	+52.5	-52.5
	Custom	32.517 - 39.641	+65.0	-100.0	+65.0	-91.3	+65.0	-70.6	+63.0	-63.0	+53.7	-53.7
120"	⅓-⅓-⅓	** - 39.641	+65.0	-100.0	+65.0	-89.3	+65.0	-68.8	+61.4	-61.4	+50.0	-50.0

** MIN. SASH SIZE = $\frac{\text{WINDOW WIDTH - 40.72}}{2}$

SEE TABLE 17 FOR ANCHORAGE

TABLE 9:

Glass Types 2 - 4 / Reinf. Level R3	Sash Configuration	Sash Width Range (in)	Design Pressure (lbs/ft²) for XOX Windows — Window Buck Height 30"		36"		48"		54"		63"	
Window Buck Width 35-1/4"	⅓-⅓-⅓	11.391 - 11.391	+65.0	-100.0	+65.0	-100.0	+65.0	-100.0	+65.0	-100.0	+65.0	-100.0
38"	⅓-⅓-⅓	12.308 - 12.308	+65.0	-100.0	+65.0	-100.0	+65.0	-100.0	+65.0	-100.0	+65.0	-100.0
45-1/8"	¼-½-¼	11.391 - 13.397	+65.0	-100.0	+65.0	-100.0	+65.0	-100.0	+65.0	-100.0	+65.0	-97.9
	⅓-⅓-⅓	13.398 - 14.683	+65.0	-100.0	+65.0	-100.0	+65.0	-100.0	+65.0	-100.0	+65.0	-100.0
47-3/4"	¼-½-¼	11.391 - 12.297	+65.0	-100.0	+65.0	-100.0	+65.0	-100.0	+65.0	-100.0	+65.0	-95.2
	⅓-⅓-⅓	12.298 - 15.558	+65.0	-100.0	+65.0	-100.0	+65.0	-100.0	+65.0	-100.0	+65.0	-91.2
52-1/8"	Custom	11.391 - 12.016	+65.0	-100.0	+65.0	-100.0	+65.0	-100.0	+65.0	-100.0	+65.0	-88.5
	¼-½-¼	12.017 - 13.397	+65.0	-100.0	+65.0	-100.0	+65.0	-100.0	+65.0	-100.0	+65.0	-87.5
	⅓-⅓-⅓	13.398 - 17.016	+65.0	-100.0	+65.0	-100.0	+65.0	-100.0	+65.0	-100.0	+65.0	-84.8
60"	Custom	11.391 - 13.397	+65.0	-100.0	+65.0	-100.0	+65.0	-100.0	+65.0	-94.8	+65.0	-77.0
	¼-½-¼	13.398 - 15.360	+65.0	-100.0	+65.0	-100.0	+65.0	-100.0	+65.0	-94.9	+65.0	-77.7
	⅓-⅓-⅓	15.361 - 19.641	+65.0	-100.0	+65.0	-100.0	+65.0	-100.0	+65.0	-92.1	+65.0	-75.7
75"	Custom	11.391 - 13.397	+65.0	-100.0	+65.0	-100.0	+65.0	-94.4	+65.0	-86.8	+65.0	-68.7
	¼-½-¼	13.398 - 19.110	+65.0	-100.0	+65.0	-100.0	+65.0	-97.3	+65.0	-80.4	+63.8	-63.8
	⅓-⅓-⅓	19.111 - 24.641	+65.0	-100.0	+65.0	-100.0	+65.0	-94.1	+65.0	-79.4	+64.3	-64.3
96"	Custom	17.641 - 19.397	+65.0	-100.0	+65.0	-90.4	+65.0	-82.8	+65.0	-75.6	+60.9	-60.9
	¼-½-¼	19.398 - 24.360	+65.0	-100.0	+65.0	-97.4	+65.0	-87.8	+65.0	-74.2	+57.5	-57.5
	⅓-⅓-⅓	24.361 - 31.641	+65.0	-100.0	+65.0	-100.0	+65.0	-85.0	+65.0	-69.9	+55.2	-55.2
120"	¼-½-¼	29.641 - 32.515	+65.0	-100.0	+65.0	-90.4	+65.0	-82.8	+65.0	-68.6	+52.7	-52.7
	⅓-⅓-⅓	32.516 - 39.641	+65.0	-100.0	+65.0	-100.0	+65.0	-81.4	+65.0	-65.6	+50.5	-50.5
140"	Custom	** - 39.641	+65.0	-100.0	+65.0	-90.4	+65.0	-81.4	+65.0	-65.6	+50.0	-50.0

** MIN. SASH SIZE = $\frac{\text{WINDOW WIDTH - 60.72}}{2}$

SEE TABLE 18 FOR ANCHORAGE

NOTES:
1) USE THESE TABLES FOR ALL WINDOWS INSTALLED THROUGH THE FRAME OR INTEGRAL FIN.
2) FRAME DIMENSIONS ARE BUCK WIDTH AND BUCK HEIGHT (SEE SHEETS 3-4). SASH SIZE IS AS PER THE FIGURE.
3) FOR SIZES NOT SHOWN, ROUND UP TO THE NEXT AVAILABLE WIDTH OR HEIGHT DIMENSION SHOWN ON THE TABLE.
4) "1/4-1/2-1/4" AND "1/3-1/3-1/3" INDICATE THAT THOSE STANDARD SASH CONFIGURATIONS FALL WITHIN THE SASH WIDTH RANGE IN THE ADJACENT COLUMN. "CUSTOM" INDICATES THAT NO STANDARD SASH CONFIGURATIONS FALL WITHIN THE RANGE.

TABLE 10:

Glass Types 1 - 4 / Reinf. Level R3	Design Pressure (lbs/ft²) for XO or OX Windows — Window Buck Height 30"		36"		48"		54"		63"	
Window Buck Width 25-1/2"	+65.0	-100.0	+65.0	-100.0	+65.0	-100.0	+65.0	-100.0	+65.0	-100.0
28"	+65.0	-100.0	+65.0	-100.0	+65.0	-100.0	+65.0	-100.0	+65.0	-100.0
36"	+65.0	-100.0	+65.0	-100.0	+65.0	-100.0	+65.0	-100.0	+65.0	-85.4
42"	+65.0	-100.0	+65.0	-100.0	+65.0	-91.7	+65.0	-82.4	+65.0	-74.1
48"	+65.0	-100.0	+65.0	-100.0	+65.0	-85.9	+65.0	-72.6	+60.9	-60.9
60"	+65.0	-100.0	+65.0	-100.0	+65.0	-83.5	+65.0	-70.9	+56.7	-56.7
75"	+65.0	-100.0	+65.0	-94.9	+65.0	-72.9	+62.8	-62.8	+50.0	-50.0

SEE TABLE 15 FOR ANCHORAGE

SECTION DETAIL
FOR WINDOWS WITH
LEVEL R3 REINFORCEMENT
(REINFORCEMENTS SHOWN IN FIGURES APPLY TO ALL FRAME TYPES & CONFIGURATIONS)

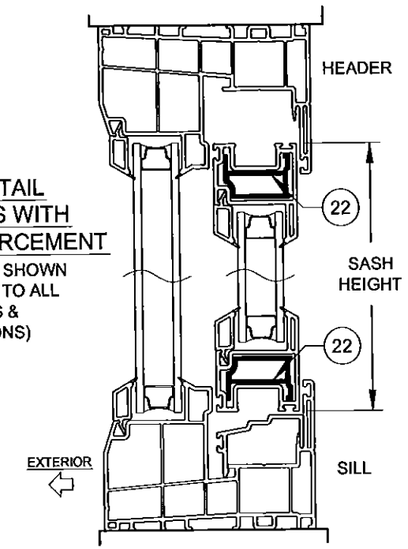

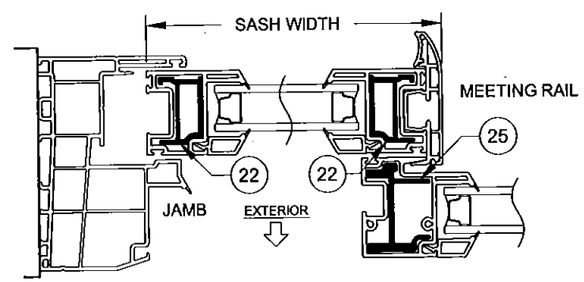

ANTHONY LYNN MILLER
LICENSE
No. 58705
9/17/15
STATE OF FLORIDA
PROFESSIONAL ENGINEER
A. LYNN MILLER, P.E.
P.E.# 58705

PGT®

1070 TECHNOLOGY DRIVE
N. VENICE, FL 34275
P.O. BOX 1529
NOKOMIS, FL 34274

CERT. OF AUTH. #29296

Revised By:	Date:	Revision:
Revised By:	Date:	Revision:

Approved as complying with the Florida Building Code
Date Sept. 24, 2015
NOA# 15-0903.11
Miami Dade Product Control
By Manuel Perez

Description:	Drawn By:
DESIGN PRESSURE TABLES	J ROSOWSKI

Title:	Date:
HORIZONTAL ROLLER - NI	05/15/15

Series/Model:	Scale:	Sheet:	Drawing No.	Rev:
HR-5410	NTS	7 OF 15	MD-HR5410-01	

TABLE 11:

Glass Types 2 - 4	Design Pressure (lbs/ft²) for XO or OX Windows										
Reinf. Level R4	Window Buck Height										
	36"		48"		54"		63"		72"		
Window Buck Width											
25-1/2"	+65.0	-130.0	+65.0	-130.0	+65.0	-130.0	+65.0	-130.0	+65.0	-130.0
28"	+65.0	-130.0	+65.0	-130.0	+65.0	-130.0	+65.0	-130.0	+65.0	-130.0
36"	+65.0	-130.0	+65.0	-130.0	+65.0	-130.0	+65.0	-130.0	+65.0	-123.3
42"	+65.0	-130.0	+65.0	-130.0	+65.0	-130.0	+65.0	-126.8	+65.0	-108.2
48"	+65.0	-130.0	+65.0	-130.0	+65.0	-130.0	+65.0	-114.2	+65.0	-97.1
60"	+65.0	-130.0	+65.0	-130.0	+65.0	-112.6	+65.0	-94.1	+65.0	-81.7
75"	+65.0	-130.0	+65.0	-119.3	+65.0	-104.0	+65.0	-84.2	+65.0	-70.0

SEE TABLE 16 FOR ANCHORAGE

TABLE 12:

Glass Types 2 - 4	Sash Configuration	Sash Width Range (in)	Design Pressure (lbs/ft²) for XOX Windows									
Reinf. Level R4			Window Buck Height									
			30"		36"		48"		54"		63"	
Window Buck Width												
35-1/4"	⅓-⅓-⅓	11.391 - 11.391	+65.0	-130.0	+65.0	-130.0	+65.0	-130.0	+65.0	-130.0	+65.0	-130.0
38"	⅓-⅓-⅓	12.308 - 12.308	+65.0	-130.0	+65.0	-130.0	+65.0	-130.0	+65.0	-130.0	+65.0	-130.0
45-1/8"	¼-½-¼	11.391 - 13.397	+65.0	-130.0	+65.0	-130.0	+65.0	-130.0	+65.0	-130.0	+65.0	-130.0
	⅓-⅓-⅓	13.398 - 14.683	+65.0	-130.0	+65.0	-130.0	+65.0	-130.0	+65.0	-130.0	+65.0	-130.0
47-3/4"	¼-½-¼	11.391 - 12.297	+65.0	-130.0	+65.0	-130.0	+65.0	-130.0	+65.0	-130.0	+65.0	-128.9
	⅓-⅓-⅓	12.298 - 15.558	+65.0	-130.0	+65.0	-130.0	+65.0	-130.0	+65.0	-130.0	+65.0	-127.7
52-1/8"	Custom	11.391 - 12.016	+65.0	-130.0	+65.0	-130.0	+65.0	-130.0	+65.0	-116.2	+65.0	-98.2
	¼-½-¼	12.017 - 13.397	+65.0	-130.0	+65.0	-130.0	+65.0	-130.0	+65.0	-121.3	+65.0	-104.3
	⅓-⅓-⅓	13.398 - 17.016	+65.0	-130.0	+65.0	-130.0	+65.0	-130.0	+65.0	-130.0	+65.0	-118.7
60"	Custom	11.391 - 13.397	+65.0	-130.0	+65.0	-130.0	+65.0	-120.4	+65.0	-104.8	+65.0	-86.2
	¼-½-¼	13.398 - 15.360	+65.0	-130.0	+65.0	-130.0	+65.0	-127.2	+65.0	-108.2	+65.0	-89.2
	⅓-⅓-⅓	15.361 - 19.641	+65.0	-130.0	+65.0	-130.0	+65.0	-130.0	+65.0	-116.4	+65.0	-98.5
75"	Custom	11.391 - 13.397	+65.0	-119.7	+65.0	-109.6	+65.0	-94.4	+65.0	-86.8	+65.0	-75.2
	¼-½-¼	13.398 - 19.110	+65.0	-130.0	+65.0	-121.2	+65.0	-102.2	+65.0	-91.7	+65.0	-79.3
	⅓-⅓-⅓	19.111 - 24.641	+65.0	-130.0	+65.0	-130.0	+65.0	-121.1	+65.0	-105.2	+65.0	-86.4
96"	Custom	17.641 - 19.397	+65.0	-100.0	+65.0	-90.4	+65.0	-82.8	+65.0	-75.6	+65.0*	-67.3*
	¼-½-¼	19.398 - 24.360	+65.0	-106.9	+65.0	-97.4	+65.0	-87.8	+65.0	-80.2	+65.0	-70.4
	⅓-⅓-⅓	24.361 - 31.641	+65.0	-130.0	+65.0	-124.2	+65.0	-103.8	+65.0	-92.7	+65.0	-77.3
120"	¼-½-¼	29.641 - 32.515	+65.0	-100.0	+65.0	-90.4	+65.0	-82.8	+65.0	-75.6	+65.0*	-67.3*
	⅓-⅓-⅓	32.516 - 39.641	+65.0	-111.6	+65.0	-103.0	+65.0	-90.6	+65.0	-83.4	+65.0	-70.7
140"	Custom	** - 39.641	+65.0	-100.0	+65.0	-90.4	+65.0	-82.8	+65.0	-75.6	+65.0*	-67.3*

* +65/-70 FOR GLASS TYPES 2 & 4

SEE TABLE 19 FOR ANCHORAGE

** MIN. SASH SIZE = $\frac{\text{WINDOW WIDTH - 60.72}}{2}$

SECTION DETAIL FOR WINDOWS WITH LEVEL R4 REINFORCEMENT

(REINFORCEMENTS SHOWN IN FIGURES APPLY TO ALL FRAME TYPES & CONFIGURATIONS)

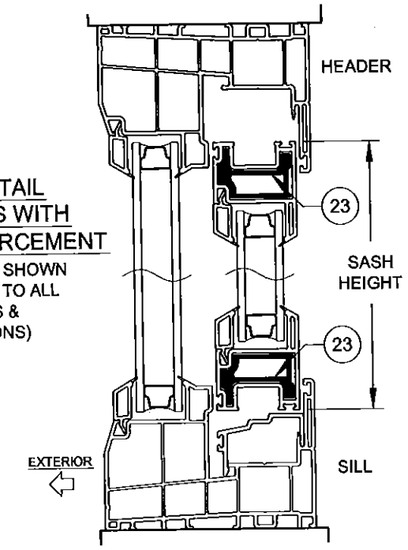

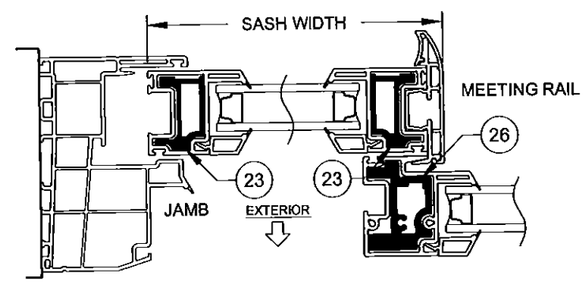

NOTES:
1) USE THESE TABLES FOR ALL WINDOWS INSTALLED THROUGH THE FRAME OR INTEGRAL FIN.
2) FRAME DIMENSIONS ARE BUCK WIDTH AND BUCK HEIGHT (SEE SHEETS 3-4). SASH SIZE IS AS PER THE FIGURE.
3) FOR SIZES NOT SHOWN, ROUND UP TO THE NEXT AVAILABLE WIDTH OR HEIGHT DIMENSION SHOWN ON THE TABLE.
4) "1/4-1/2-1/4" AND "1/3-1/3-1/3" INDICATE THAT THOSE STANDARD SASH CONFIGURATIONS FALL WITHIN THE SASH WIDTH RANGE IN THE ADJACENT COLUMN. "CUSTOM" INDICATES THAT NO STANDARD SASH CONFIGURATIONS FALL WITHIN THE RANGE.

ANTHONY LYNN MILLER
LICENSE
No. 58705
STATE OF FLORIDA
PROFESSIONAL ENGINEER
9/17/15

A. LYNN MILLER, P.E.
P.E.# 58705

PGT®

1070 TECHNOLOGY DRIVE
N. VENICE, FL 34275
P.O. BOX 1529
NOKOMIS, FL 34274

CERT. OF AUTH. #29296

Approved as complying with the Florida Building Code
Date Sept. 24 2015
NOA# 15-0903.11
Miami Dade Product Control
By Manuel Perez

Revised By:	Date:	Revision:
Revised By:	Date:	Revision:

Description:	Drawn By:
DESIGN PRESSURE TABLES	J ROSOWSKI

Title:	Date:
HORIZONTAL ROLLER - NI	05/15/15

Series/Model:	Scale:	Sheet:	Drawing No.	Rev:
HR-5410	NTS	8 OF 15	MD-HR5410-01	

TABLE 13:

Glass Types 1 - 4 / Reinf. Level R1	Sash Width (in)	Anchor Quantities for XO or OX Windows															
		30" Height		36" Height		48" Height		54" Height		30" Height		36" Height		48" Height		54" Height	
		Head & Sill	Jamb	Head & Sill	Jamb	Head & Sill	Jamb	Head & Sill	Jamb	Head & Sill	Jamb	Head & Sill	Jamb	Head & Sill	Jamb	Head & Sill	Jamb
		Anchor Group A								Anchor Group C							
Window Buck Width	25-1/2"	12.147	1+C2+1	2	1+C2+1	3	1+C2+1	3	1+C2+1	3	1+C2+1	2	1+C2+1	3	1+C2+1	3	1+C2+1	3
	28"	13.397	1+C2+1	2	1+C2+1	3	1+C2+1	3	1+C2+1	3	1+C2+1	2	1+C2+1	3	1+C2+1	3	1+C2+1	3
	36"	17.397	1+C2+1	2	1+C2+1	3	1+C2+1	3	1+C2+1	3	1+C2+1	2	1+C2+1	3	1+C2+1	3	1+C2+1	3
	42"	20.397	1+C2+1	2	1+C2+1	3	1+C2+1	3	1+C2+1	3	1+C2+1	2	1+C2+1	3	1+C2+1	3	1+C2+1	3
	48"	23.397	1+C2+1	2	1+C2+1	3	1+C2+1	3	1+C2+1	3	1+C2+1	2	1+C2+1	3	1+C2+1	3	1+C2+1	3
	60"	29.397	2+C2+2	2	2+C2+2	3	2+C2+2	3	2+C2+2	3	2+C2+2	2	2+C2+2	3	2+C2+2	3	2+C2+2	3
	75"	36.897	2+C2+2	2	2+C2+2	3	2+C2+2	3	2+C2+2	3	2+C2+2	2	2+C2+2	3	2+C2+2	3	2+C2+2	3
		Anchor Group B								Anchor Group D							
Window Buck Width	25-1/2"	12.147	1+C2+1	2	1+C2+1	3	1+C2+1	3	1+C2+1	3	1+C2+1	2	1+C2+1	3	1+C2+1	3	1+C2+1	3
	28"	13.397	1+C2+1	2	1+C2+1	3	1+C2+1	3	1+C2+1	3	1+C2+1	2	1+C2+1	3	1+C2+1	3	1+C2+1	3
	36"	17.397	1+C2+1	2	1+C2+1	3	1+C2+1	3	1+C2+1	3	1+C2+1	2	1+C2+1	3	1+C2+1	3	1+C2+1	3
	42"	20.397	1+C2+1	2	1+C2+1	3	1+C2+1	3	1+C2+1	3	1+C2+1	2	1+C2+1	3	1+C2+1	3	1+C2+1	3
	48"	23.397	1+C2+1	2	1+C2+1	3	1+C2+1	3	1+C2+1	3	1+C2+1	2	1+C2+1	3	1+C2+1	3	1+C2+1	3
	60"	29.397	2+C2+2	2	2+C2+2	3	2+C2+2	3	2+C2+2	3	2+C2+2	2	2+C2+2	3	2+C2+2	3	2+C2+2	3
	75"	36.897	2+C2+2	2	2+C2+2	3	2+C2+2	3	2+C2+2	3	2+C2+2	2	2+C2+2	3	2+C2+2	3	2+C2+2	3

SEE TABLE 6 FOR DESIGN PRESSURE

TABLE 14:

Glass Types 1 - 4 / Reinf. Level R2	Sash Width (in)	Anchor Quantities for XO or OX Windows															
		30" Height		36" Height		48" Height		54" Height		30" Height		36" Height		48" Height		54" Height	
		Head & Sill	Jamb	Head & Sill	Jamb	Head & Sill	Jamb	Head & Sill	Jamb	Head & Sill	Jamb	Head & Sill	Jamb	Head & Sill	Jamb	Head & Sill	Jamb
		Anchor Group A								Anchor Group C							
Window Buck Width	25-1/2"	12.147	Not Allowed							1+C2+1	2	1+C2+1	3	1+C2+1	3	1+C2+1	3
	28"	13.397								1+C2+1	2	1+C2+1	3	1+C2+1	3	1+C2+1	3
	36"	17.397								1+C2+1	2	1+C2+1	3	1+C2+1	3	1+C2+1	3
	42"	20.397								1+C2+1	2	1+C2+1	3	1+C2+1	3	1+C2+1	3
	48"	23.397								1+C2+1	2	1+C2+1	3	1+C2+1	3	1+C2+1	3
	60"	29.397								2+C2+2	2	2+C2+2	3	2+C2+2	3	2+C2+2	3
	75"	36.897								2+C2+2	2	2+C2+2	3	2+C2+2	3	2+C2+2	3
		Anchor Group B								Anchor Group D							
Window Buck Width	25-1/2"	12.147	1+C2+1	2	1+C2+1	3	1+C2+1	3	1+C2+1	3	1+C2+1	2	1+C2+1	3	1+C2+1	3	1+C2+1	3
	28"	13.397	1+C2+1	2	1+C2+1	3	1+C2+1	3	1+C2+1	3	1+C2+1	2	1+C2+1	3	1+C2+1	3	1+C2+1	3
	36"	17.397	1+C2+1	2	1+C2+1	3	1+C2+1	3	1+C2+1	3	1+C2+1	2	1+C2+1	3	1+C2+1	3	1+C2+1	3
	42"	20.397	1+C2+1	2	1+C2+1	3	1+C2+1	3	1+C2+1	3	1+C2+1	2	1+C2+1	3	1+C2+1	3	1+C2+1	3
	48"	23.397	1+C2+1	2	1+C2+1	3	1+C2+1	3	1+C2+1	3	1+C2+1	2	1+C2+1	3	1+C2+1	3	1+C2+1	3
	60"	29.397	2+C2+2	2	2+C2+2	3	2+C2+2	3	2+C2+2	3	2+C2+2	2	2+C2+2	3	2+C2+2	3	2+C2+2	3
	75"	36.897	2+C2+2	2	2+C2+2	3	2+C2+2	3	2+C2+2	3	2+C2+2	2	2+C2+2	3	2+C2+2	3	2+C2+2	3

SEE TABLE 7 FOR DESIGN PRESSURE

Max. Anchor O.C. Spacing for "Integral-Fin" Installation	Anchor Group E	Anchor Group F
	2.5"	4"

GUIDE TO USING ANCHOR QUANTITY TABLES

FOR OX WINDOWS (XO SIMILAR):

ANCHOR QUANTITY PER JAMB

2+C3+2 | 3

HEAD AND SILL ANCHOR QUANTITY:
(2) ANCHORS AT THE FIXED SECTION
+ A CLUSTER OF (3) ANCHORS CENTERED AT THE MEETING RAIL
+ (2) ANCHORS AT THE SASH
TOTAL OF 7 ANCHORS AT THE HEAD AND 7 ANCHORS AT THE SILL.

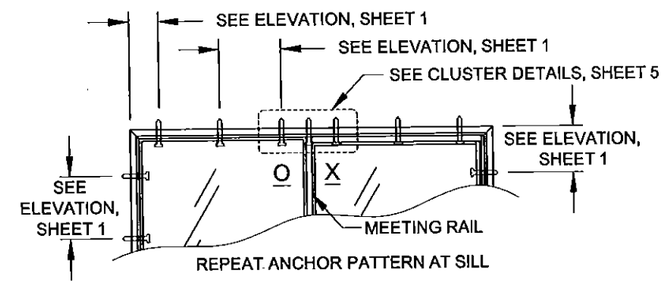

FOR XOX WINDOWS:

ANCHOR QUANTITY PER JAMB

1+C3+2+C3+1 | 4

HEAD AND SILL ANCHOR QUANTITY:
(1) ANCHOR AT THE SASH
+ A CLUSTER OF (3) ANCHORS CENTERED AT THE MEETING RAIL
+ (2) ANCHORS AT THE FIXED SECTION
+ A CLUSTER OF (3) ANCHORS CENTERED AT THE MEETING RAIL
+ (1) ANCHOR AT THE SASH
TOTAL OF 10 ANCHORS AT THE HEAD AND 10 ANCHORS AT THE SILL.

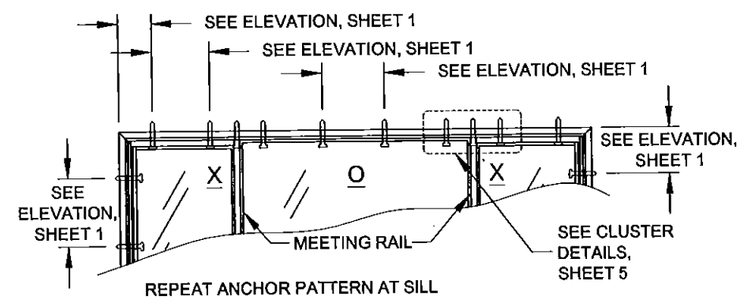

Max. Anchor O.C. Spacing for "Integral-Fin" Installation	Anchor Group F
	4"

NOTES:
1) FRAME DIMENSIONS ARE BUCK WIDTH AND BUCK HEIGHT (SEE SHEETS 3-4). SASH SIZE IS AS PER THE FIGURES ON SHEETS 6-8.
2) FOR SIZES NOT SHOWN, ROUND UP TO THE NEXT AVAILABLE WIDTH OR HEIGHT DIMENSION SHOWN ON THE TABLE.

Approved as complying with the Florida Building Code
Date Sept. 24, 2015
NOA# 15-0903.11
Miami Dade Product Control
By Manuel Perez

Rev	Date	Drawn By	DWG No.	Sheet	Scale	Series
Rev 1						
Rev 2						
Rev.	05/15/15	J ROSOWSKI	MD-HR5410-01	9 OF 15	NTS	HR-5410

1070 TECHNOLOGY DRIVE
N. VENICE, FL 34275
P.O. BOX 1529
NOKOMIS, FL 34274
(941)-480-1600
PCI® CERT. OF AUTH. #29296

Title: ANCHOR QUANTITY TABLES
Desc.: HORIZONTAL ROLLER - NI

ANTHONY LYNN MILLER
LICENSE
No. 58705
STATE OF FLORIDA
PROFESSIONAL ENGINEER
9/17/15

A. LYNN MILLER, P.E.
P.E.# 58705

TABLE 15:

Anchor Quantities for XO or OX Windows

Glass Types 1 - 4 / Reinf. Level R3	Sash Width (in)	30" Height Head & Sill	30" Height Jamb	36" Height Head & Sill	36" Height Jamb	48" Height Head & Sill	48" Height Jamb	54" Height Head & Sill	54" Height Jamb	63" Height Head & Sill	63" Height Jamb
		Anchor Group A									
Window Buck Width 25-1/2"	12.147	1+C2+1	2	1+C2+1	3	1+C2+1	4	1+C2+1	4	1+C2+1	4
28"	13.397	1+C2+1	2	1+C2+1	3	1+C2+1	4	1+C2+1	4	1+C3+1	4
36"	17.397	1+C2+1	2	1+C2+1	3	1+C2+1	4	1+C3+1	4	1+C3+1	4
42"	20.397	1+C2+1	2	1+C2+1	3	1+C2+1	4	1+C3+1	4	1+C3+1	4
48"	23.397	1+C2+1	2	1+C2+1	3	1+C2+1	4	1+C2+1	4	1+C2+1	4
60"	29.397	2+C2+2	2	2+C2+2	3	2+C3+2	4	2+C3+2	4	2+C3+2	4
75"	36.897	2+C2+2	2	2+C2+2	3	2+C3+2	4	2+C3+2	4	2+C3+2	4
		Anchor Group B									
Window Buck Width 25-1/2"	12.147	1+C2+1	2	1+C2+1	3	1+C2+1	4	1+C2+1	4	1+C2+1	4
28"	13.397	1+C2+1	2	1+C2+1	3	1+C2+1	4	1+C2+1	4	1+C2+1	4
36"	17.397	1+C2+1	2	1+C2+1	3	1+C2+1	4	1+C2+1	4	1+C2+1	4
42"	20.397	1+C2+1	2	1+C2+1	3	1+C2+1	4	1+C2+1	4	1+C2+1	4
48"	23.397	1+C2+1	2	1+C2+1	3	1+C2+1	4	1+C2+1	4	1+C2+1	4
60"	29.397	2+C2+2	2	2+C2+2	3	2+C2+2	4	2+C2+2	4	2+C2+2	4
75"	36.897	2+C2+2	2	2+C2+2	3	2+C2+2	4	2+C2+2	4	2+C2+2	4

Reinf. Level R3	Sash Width (in)	30" Height Head & Sill	30" Height Jamb	36" Height Head & Sill	36" Height Jamb	48" Height Head & Sill	48" Height Jamb	54" Height Head & Sill	54" Height Jamb	63" Height Head & Sill	63" Height Jamb
		Anchor Group C									
Window Buck Width 25-1/2"	12.147	1+C2+1	2	1+C2+1	3	1+C2+1	4	1+C2+1	4	1+C2+1	4
28"	13.397	1+C2+1	2	1+C2+1	3	1+C2+1	4	1+C2+1	4	1+C2+1	4
36"	17.397	1+C2+1	2	1+C2+1	3	1+C2+1	4	1+C2+1	4	1+C2+1	4
42"	20.397	1+C2+1	2	1+C2+1	3	1+C2+1	4	1+C2+1	4	1+C2+1	4
48"	23.397	1+C2+1	2	1+C2+1	3	1+C2+1	4	1+C2+1	4	1+C2+1	4
60"	29.397	2+C2+2	2	2+C2+2	3	2+C2+2	4	2+C2+2	4	2+C2+2	4
75"	36.897	2+C2+2	2	2+C2+2	3	2+C2+2	4	2+C2+2	4	2+C2+2	4
		Anchor Group D									
Window Buck Width 25-1/2"	12.147	1+C2+1	2	1+C2+1	3	1+C2+1	4	1+C2+1	4	1+C2+1	4
28"	13.397	1+C2+1	2	1+C2+1	3	1+C2+1	4	1+C2+1	4	1+C2+1	4
36"	17.397	1+C2+1	2	1+C2+1	3	1+C2+1	4	1+C2+1	4	1+C2+1	4
42"	20.397	1+C2+1	2	1+C2+1	3	1+C2+1	4	1+C2+1	4	1+C2+1	4
48"	23.397	1+C2+1	2	1+C2+1	3	1+C2+1	4	1+C2+1	4	1+C2+1	4
60"	29.397	2+C2+2	2	2+C2+2	3	2+C2+2	4	2+C2+2	4	2+C2+2	4
75"	36.897	2+C2+2	2	2+C2+2	3	2+C2+2	4	2+C2+2	4	2+C2+2	4

SEE TABLE 10 FOR DESIGN PRESSURE

Max. Anchor O.C. Spacing for "Integral-Fin" Installation	
Anchor Group E	Anchor Group F
2.5"	4"

NOTES:

1) FRAME DIMENSIONS ARE BUCK WIDTH AND BUCK HEIGHT (SEE SHEETS 3-4). SASH SIZE IS AS PER THE FIGURES ON SHEETS 6-8.

2) FOR SIZES NOT SHOWN, ROUND UP TO THE NEXT AVAILABLE WIDTH OR HEIGHT DIMENSION SHOWN ON THE TABLE.

3) SEE SHEET 9 FOR A GUIDE TO USING THESE TABLES.

4)"1/4-1/2-1/4" AND "1/3-1/3-1/3" INDICATE THAT THOSE STANDARD SASH CONFIGURATIONS FALL WITHIN THE SASH WIDTH RANGE IN THE ADJACENT COLUMN. "CUSTOM" INDICATES THAT NO STANDARD SASH CONFIGURATIONS FALL WITHIN THE RANGE

TABLE 16:

Anchor Quantities for XO or OX Windows

Glass Types 2 - 4 / Reinf. Level R4	Sash Width (in)	30" Height Head & Sill	30" Height Jamb	36" Height Head & Sill	36" Height Jamb	48" Height Head & Sill	48" Height Jamb	54" Height Head & Sill	54" Height Jamb	63" Height Head & Sill	63" Height Jamb	72" Height Head & Sill	72" Height Jamb
		Anchor Group A											
Window Buck Width 25-1/2"	12.147	Not Allowed											
28"	13.397												
36"	17.397												
42"	20.397												
48"	23.397												
60"	29.397												
75"	36.897												
		Anchor Group B											
Window Buck Width 25-1/2"	12.147	1+C2+1	2	1+C2+1	3	1+C2+1	4	1+C3+1	4	1+C3+1	5	1+C4+1	5
28"	13.397	1+C2+1	2	1+C2+1	3	1+C3+1	4	1+C3+1	4	1+C3+1	5	1+C4+1	5
36"	17.397	1+C2+1	2	1+C2+1	3	1+C3+1	4	1+C4+1	4	1+C4+1	5	1+C4+1	5
42"	20.397	1+C2+1	2	1+C2+1	3	1+C3+1	4	1+C4+1	4	1+C4+1	5	1+C4+1	5
48"	23.397	1+C2+1	2	1+C3+1	3	1+C4+1	4	1+C4+1	4	1+C4+1	5	1+C4+1	5
60"	29.397	2+C2+2	2	2+C3+2	3	2+C4+2	4	2+C4+2	4	2+C4+2	5	2+C4+2	5
75"	36.897	2+C2+2	2	2+C3+2	3	2+C4+2	4	2+C4+2	4	2+C4+2	5	2+C4+2	5

Reinf. Level R4	Sash Width (in)	30" Height Head & Sill	30" Height Jamb	36" Height Head & Sill	36" Height Jamb	48" Height Head & Sill	48" Height Jamb	54" Height Head & Sill	54" Height Jamb	63" Height Head & Sill	63" Height Jamb	72" Height Head & Sill	72" Height Jamb
		Anchor Group C											
Window Buck Width 25-1/2"	12.147	1+C2+1	2	1+C2+1	3	1+C2+1	4	1+C3+1	4	1+C3+1	5	1+C4+1	5
28"	13.397	1+C2+1	2	1+C2+1	3	1+C3+1	4	1+C3+1	4	1+C3+1	5	1+C4+1	5
36"	17.397	1+C2+1	2	1+C2+1	3	1+C3+1	4	1+C4+1	4	1+C4+1	5	1+C4+1	5
42"	20.397	1+C2+1	2	1+C2+1	3	1+C3+1	4	1+C4+1	4	1+C4+1	5	1+C4+1	5
48"	23.397	1+C2+1	2	1+C3+1	3	1+C4+1	4	1+C4+1	4	1+C4+1	5	1+C4+1	5
60"	29.397	2+C2+2	2	2+C3+2	3	2+C4+2	4	2+C4+2	4	2+C4+2	5	2+C4+2	5
75"	36.897	2+C2+2	2	2+C3+2	3	2+C4+2	4	2+C4+2	4	2+C4+2	5	2+C4+2	5
		Anchor Group D											
Window Buck Width 25-1/2"	12.147	1+C2+1	2	1+C2+1	3	1+C2+1	4	1+C3+1	4	1+C3+1	5	1+C4+1	5
28"	13.397	1+C2+1	2	1+C2+1	3	1+C3+1	4	1+C3+1	4	1+C3+1	5	1+C4+1	5
36"	17.397	1+C2+1	2	1+C2+1	3	1+C3+1	4	1+C4+1	4	1+C4+1	5	1+C4+1	5
42"	20.397	1+C2+1	2	1+C2+1	3	1+C3+1	4	1+C4+1	4	1+C4+1	5	1+C4+1	5
48"	23.397	1+C2+1	2	1+C3+1	3	1+C4+1	4	1+C4+1	4	1+C4+1	5	1+C4+1	5
60"	29.397	2+C2+2	2	2+C3+2	3	2+C4+2	4	2+C4+2	4	2+C4+2	5	2+C4+2	5
75"	36.897	2+C2+2	2	2+C3+2	3	2+C4+2	4	2+C4+2	4	2+C4+2	5	2+C4+2	5

SEE TABLE 11 FOR DESIGN PRESSURE

Max. Anchor O.C. Spacing for "Integral-Fin"
Anchor Group F
3.1"

Approved as complying with the Florida Building Code
Date Sept. 24, 2015
NOA# 15-1009.11
Miami Dade Product Control
By Manuel Perez

Rev.	Date	Drawn By	DWG No.
Rev 1			
Rev 2			

1070 TECHNOLOGY DRIVE
N. VENICE, FL 34275
P.O. BOX 1529
NOKOMIS, FL 34274
(941)-480-1600
CERT. OF AUTH. #29296

Series	Desc.	Sheet	Scale	Rev.
HR-5410	HORIZONTAL ROLLER - NI	10 OF 15	NTS	MD-HR5410-01

Title: ANCHOR QUANTITY TABLES

Date 05/15/15

ANTHONY LYNN MILLER LICENSE No. 58705 STATE OF FLORIDA PROFESSIONAL ENGINEER
9/17/15

A. LYNN MILLER, P.E.
P.E.# 58705

TABLE 17:

Anchor Quantities for XOX Windows

Glass Type 1 / Reinf. Level R3	Window Buck Width	Sash Configuration	Sash Width Range (in)	24" Height Head & Sill	24" Height Jamb	30" Height Head & Sill	30" Height Jamb	36" Height Head & Sill	36" Height Jamb	48" Height Head & Sill	48" Height Jamb	54" Height Head & Sill	54" Height Jamb	63" Height Head & Sill	63" Height Jamb
				Anchor Group A											
	35-1/4"	⅓-⅓-⅓	11.391 - 11.391	1+C2+0+C2+1	2	1+C2+0+C2+1	2	1+C2+0+C2+1	3	1+C2+0+C2+1	4	1+C2+0+C2+1	4	1+C2+0+C2+1	4
	38"	⅓-⅓-⅓	12.308 - 12.308	1+C2+0+C2+1	2	1+C2+0+C2+1	2	1+C2+0+C2+1	3	1+C2+0+C2+1	4	1+C2+0+C2+1	4	1+C3+0+C3+1	4
	45-1/8"	¼-½-¼	11.391 - 13.397	1+C2+0+C2+1	2	1+C2+0+C2+1	2	1+C2+0+C2+1	3	1+C3+0+C3+1	4	1+C3+0+C3+1	4	1+C3+0+C3+1	4
		⅓-⅓-⅓	13.398 - 14.683	1+C2+0+C2+1	2	1+C2+0+C2+1	2	1+C2+0+C2+1	3	1+C3+0+C3+1	4	1+C3+0+C3+1	4	1+C3+0+C3+1	4
	47-3/4"	¼-½-¼	11.391 - 12.297	1+C2+0+C2+1	2	1+C2+0+C2+1	2	1+C2+0+C2+1	3	1+C3+0+C3+1	4	1+C3+0+C3+1	4	1+C3+0+C3+1	4
		⅓-⅓-⅓	12.298 - 15.558	1+C2+0+C2+1	2	1+C2+0+C2+1	2	1+C2+0+C2+1	3	1+C3+0+C3+1	4	1+C3+0+C3+1	4	1+C3+0+C3+1	4
	52-1/8"	Custom	11.391 - 12.016	1+C2+2+C2+1	2	1+C2+2+C2+1	2	1+C2+2+C2+1	3	1+C2+1+C2+1	4	1+C2+1+C2+1	4	1+C2+1+C2+1	4
		¼-½-¼	12.017 - 13.397	1+C2+0+C2+1	2	1+C2+0+C2+1	2	1+C3+0+C3+1	3	1+C3+0+C3+1	4	1+C3+0+C3+1	4	1+C3+0+C3+1	4
		⅓-⅓-⅓	13.398 - 17.016	1+C2+0+C2+1	2	1+C2+0+C2+1	2	1+C3+0+C3+1	3	1+C3+0+C3+1	4	1+C3+0+C3+1	4	1+C3+0+C3+1	4
	60"	Custom	11.391 - 13.397	1+C2+2+C2+1	2	1+C2+2+C2+1	2	1+C2+2+C2+1	3	1+C2+2+C2+1	4	1+C3+2+C3+1	4	1+C3+1+C3+1	4
		¼-½-¼	13.398 - 15.360	1+C2+2+C2+1	2	1+C2+2+C2+1	2	1+C2+2+C2+1	3	1+C3+2+C3+1	4	1+C3+1+C3+1	4	1+C3+1+C3+1	4
		⅓-⅓-⅓	15.361 - 19.641	1+C2+0+C2+1	2	1+C2+0+C2+1	2	1+C3+0+C3+1	3	1+C3+0+C3+1	4	1+C3+0+C3+1	4	1+C3+0+C3+1	4
	75"	¼-½-¼	17.141 - 19.110	1+C2+2+C2+1	2	1+C2+2+C2+1	2	1+C2+2+C2+1	3	1+C2+2+C2+1	4	1+C3+2+C3+1	4	1+C3+2+C3+1	4
		⅓-⅓-⅓	19.111 - 24.641	1+C2+0+C2+1	2	1+C3+0+C3+1	2	1+C3+0+C3+1	3	1+C3+0+C3+1	4	1+C4+0+C4+1	4	1+C4+0+C4+1	4
	96"	⅓-⅓-⅓	27.641 - 32.516	2+C2+2+C2+2	2	2+C2+2+C2+2	2	2+C2+2+C2+2	3	2+C3+2+C3+2	4	1+C3+2+C3+1	4	1+C3+2+C3+1	4
		Custom	32.517 - 39.641	2+C2+0+C2+2	2	2+C3+0+C3+2	2	2+C3+0+C3+2	3	2+C3+0+C3+2	4	2+C3+0+C3+2	4	2+C3+0+C3+2	4
	120"	⅓-⅓-⅓	** - 39.641	2+C2+2+C2+2	2	3+C2+2+C2+3	2	2+C2+2+C2+3	3	2+C3+2+C3+2	4	2+C3+2+C3+2	4	2+C3+2+C3+2	4
				Anchor Group B											
	35-1/4"	⅓-⅓-⅓	11.391 - 11.391	1+C2+0+C2+1	2	1+C2+0+C2+1	2	1+C2+0+C2+1	3	1+C2+0+C2+1	4	1+C2+0+C2+1	4	1+C2+0+C2+1	4
	38"	⅓-⅓-⅓	12.308 - 12.308	1+C2+0+C2+1	2	1+C2+0+C2+1	2	1+C2+0+C2+1	3	1+C2+0+C2+1	4	1+C2+0+C2+1	4	1+C3+0+C3+1	4
	45-1/8"	¼-½-¼	11.391 - 13.397	1+C2+0+C2+1	2	1+C2+0+C2+1	2	1+C2+0+C2+1	3	1+C3+0+C3+1	4	1+C3+0+C3+1	4	1+C3+0+C3+1	4
		⅓-⅓-⅓	13.398 - 14.683	1+C2+0+C2+1	2	1+C2+0+C2+1	2	1+C2+0+C2+1	3	1+C3+0+C3+1	4	1+C3+0+C3+1	4	1+C3+0+C3+1	4
	47-3/4"	¼-½-¼	11.391 - 12.297	1+C2+0+C2+1	2	1+C2+0+C2+1	2	1+C2+0+C2+1	3	1+C3+0+C3+1	4	1+C3+0+C3+1	4	1+C3+0+C3+1	4
		⅓-⅓-⅓	12.298 - 15.558	1+C2+0+C2+1	2	1+C2+0+C2+1	2	1+C2+0+C2+1	3	1+C3+0+C3+1	4	1+C3+0+C3+1	4	1+C3+0+C3+1	4
	52-1/8"	Custom	11.391 - 12.016	1+C2+1+C2+1	2	1+C2+1+C2+1	2	1+C2+1+C2+1	3	1+C2+1+C2+1	4	1+C2+1+C2+1	4	1+C2+1+C2+1	4
		¼-½-¼	12.017 - 13.397	1+C2+0+C2+1	2	1+C2+0+C2+1	2	1+C3+0+C3+1	3	1+C3+0+C3+1	4	1+C3+0+C3+1	4	1+C3+0+C3+1	4
		⅓-⅓-⅓	13.398 - 17.016	1+C2+0+C2+1	2	1+C2+0+C2+1	2	1+C3+0+C3+1	3	1+C3+0+C3+1	4	1+C3+0+C3+1	4	1+C3+0+C3+1	4
	60"	Custom	11.391 - 13.397	1+C2+2+C2+1	2	1+C2+2+C2+1	2	1+C2+2+C2+1	3	1+C2+1+C2+1	4	1+C3+1+C3+1	4	1+C3+1+C3+1	4
		¼-½-¼	13.398 - 15.360	1+C2+1+C2+1	2	1+C2+2+C2+1	2	1+C2+2+C2+1	3	1+C3+1+C3+1	4	1+C3+1+C3+1	4	1+C3+1+C3+1	4
		⅓-⅓-⅓	15.361 - 19.641	1+C2+0+C2+1	2	1+C2+0+C2+1	2	1+C3+0+C3+1	3	1+C3+0+C3+1	4	1+C3+0+C3+1	4	1+C3+0+C3+1	4
	75"	¼-½-¼	17.141 - 19.110	1+C2+2+C2+1	2	1+C2+2+C2+1	2	1+C2+2+C2+1	3	1+C2+2+C2+1	4	1+C3+1+C3+1	4	1+C3+1+C3+1	4
		⅓-⅓-⅓	19.111 - 24.641	1+C2+0+C2+1	2	1+C3+0+C3+1	2	1+C3+0+C3+1	3	1+C3+0+C3+1	4	1+C4+0+C4+1	4	1+C4+0+C4+1	4
	96"	⅓-⅓-⅓	27.641 - 32.516	2+C2+2+C2+2	2	2+C2+2+C2+2	2	1+C2+2+C2+2	3	1+C3+2+C3+1	4	1+C3+1+C3+1	4	1+C3+1+C3+1	4
		Custom	32.517 - 39.641	2+C2+0+C2+2	2	2+C3+0+C3+2	2	2+C3+0+C3+2	3	2+C3+0+C3+2	4	2+C3+0+C3+2	4	2+C3+0+C3+2	4
	120"	⅓-⅓-⅓	** - 39.641	2+C2+2+C2+2	2	2+C2+2+C2+2	2	2+C2+2+C2+2	3	2+C3+2+C3+2	4	2+C3+2+C3+2	4	2+C3+2+C3+2	4

Sash Configuration	24" Height Head & Sill	24" Height Jamb	30" Height Head & Sill	30" Height Jamb	36" Height Head & Sill	36" Height Jamb	48" Height Head & Sill	48" Height Jamb	54" Height Head & Sill	54" Height Jamb	63" Height Head & Sill	63" Height Jamb
	Anchor Group C											
35-1/4"	1+C2+0+C2+1	2	1+C2+0+C2+1	2	1+C2+0+C2+1	3	1+C2+0+C2+1	4	1+C2+0+C2+1	4	1+C2+0+C2+1	4
38"	1+C2+0+C2+1	2	1+C2+0+C2+1	2	1+C2+0+C2+1	3	1+C2+0+C2+1	4	1+C2+0+C2+1	4	1+C3+0+C3+1	4
45-1/8" ¼-½-¼	1+C2+0+C2+1	2	1+C2+0+C2+1	2	1+C2+0+C2+1	3	1+C3+0+C3+1	4	1+C3+0+C3+1	4	1+C3+0+C3+1	4
45-1/8" ⅓-⅓-⅓	1+C2+0+C2+1	2	1+C2+0+C2+1	2	1+C2+0+C2+1	3	1+C3+0+C3+1	4	1+C3+0+C3+1	4	1+C3+0+C3+1	4
47-3/4" ¼-½-¼	1+C2+0+C2+1	2	1+C2+0+C2+1	2	1+C2+0+C2+1	3	1+C3+0+C3+1	4	1+C3+0+C3+1	4	1+C3+0+C3+1	4
47-3/4" ⅓-⅓-⅓	1+C2+0+C2+1	2	1+C2+0+C2+1	2	1+C2+0+C2+1	3	1+C3+0+C3+1	4	1+C3+0+C3+1	4	1+C3+0+C3+1	4
52-1/8" Custom	1+C2+1+C2+1	2	1+C2+1+C2+1	2	1+C2+1+C2+1	3	1+C2+1+C2+1	4	1+C2+1+C2+1	4	1+C2+1+C2+1	4
52-1/8" ¼-½-¼	1+C2+0+C2+1	2	1+C2+0+C2+1	2	1+C3+0+C3+1	3	1+C3+0+C3+1	4	1+C3+0+C3+1	4	1+C3+0+C3+1	4
52-1/8" ⅓-⅓-⅓	1+C2+0+C2+1	2	1+C2+0+C2+1	2	1+C3+0+C3+1	3	1+C3+0+C3+1	4	1+C3+0+C3+1	4	1+C3+0+C3+1	4
60" Custom	1+C2+2+C2+1	2	1+C2+2+C2+1	2	1+C2+2+C2+1	3	1+C2+2+C2+1	4	1+C3+1+C3+1	4	1+C3+1+C3+1	4
60" ¼-½-¼	1+C2+1+C2+1	2	1+C2+1+C2+1	2	1+C2+1+C2+1	3	1+C3+1+C3+1	4	1+C3+1+C3+1	4	1+C3+1+C3+1	4
60" ⅓-⅓-⅓	1+C2+0+C2+1	2	1+C2+0+C2+1	2	1+C3+0+C3+1	3	1+C3+0+C3+1	4	1+C3+0+C3+1	4	1+C3+0+C3+1	4
75" ¼-½-¼	1+C2+2+C2+1	2	1+C2+2+C2+1	2	1+C2+2+C2+1	3	1+C2+2+C2+1	4	1+C3+1+C3+1	4	1+C3+1+C3+1	4
75" ⅓-⅓-⅓	1+C2+0+C2+1	2	1+C3+0+C3+1	2	1+C3+0+C3+1	3	1+C4+0+C4+1	4	1+C4+0+C4+1	4	1+C4+0+C4+1	4
96" ⅓-⅓-⅓	1+C2+2+C2+1	2	1+C2+2+C2+1	2	1+C2+2+C2+1	3	1+C3+1+C3+1	4	1+C3+1+C3+1	4	1+C3+1+C3+1	4
96" Custom	2+C2+0+C2+2	2	2+C3+0+C3+2	2	2+C3+0+C3+2	3	2+C3+0+C3+2	4	2+C3+0+C3+2	4	2+C3+0+C3+2	4
120" ⅓-⅓-⅓	2+C2+2+C2+2	2	2+C2+2+C2+2	2	2+C2+2+C2+2	3	2+C3+2+C3+2	4	2+C3+2+C3+2	4	2+C3+2+C3+2	4
	Anchor Group D											
35-1/4"	1+C2+0+C2+1	2	1+C2+0+C2+1	2	1+C2+0+C2+1	3	1+C2+0+C2+1	4	1+C2+0+C2+1	4	1+C2+0+C2+1	4
38"	1+C2+0+C2+1	2	1+C2+0+C2+1	2	1+C2+0+C2+1	3	1+C2+0+C2+1	4	1+C2+0+C2+1	4	1+C3+0+C3+1	4
45-1/8" ¼-½-¼	1+C2+0+C2+1	2	1+C2+0+C2+1	2	1+C2+0+C2+1	3	1+C3+0+C3+1	4	1+C3+0+C3+1	4	1+C3+0+C3+1	4
45-1/8" ⅓-⅓-⅓	1+C2+0+C2+1	2	1+C2+0+C2+1	2	1+C2+0+C2+1	3	1+C3+0+C3+1	4	1+C3+0+C3+1	4	1+C3+0+C3+1	4
47-3/4" ¼-½-¼	1+C2+0+C2+1	2	1+C2+0+C2+1	2	1+C2+0+C2+1	3	1+C3+0+C3+1	4	1+C3+0+C3+1	4	1+C3+0+C3+1	4
47-3/4" ⅓-⅓-⅓	1+C2+0+C2+1	2	1+C2+0+C2+1	2	1+C2+0+C2+1	3	1+C3+0+C3+1	4	1+C3+0+C3+1	4	1+C3+0+C3+1	4
52-1/8" Custom	1+C2+1+C2+1	2	1+C2+1+C2+1	2	1+C2+1+C2+1	3	1+C2+1+C2+1	4	1+C2+1+C2+1	4	1+C2+1+C2+1	4
52-1/8" ¼-½-¼	1+C2+0+C2+1	2	1+C2+0+C2+1	2	1+C3+0+C3+1	3	1+C3+0+C3+1	4	1+C3+0+C3+1	4	1+C3+0+C3+1	4
52-1/8" ⅓-⅓-⅓	1+C2+0+C2+1	2	1+C2+0+C2+1	2	1+C3+0+C3+1	3	1+C3+0+C3+1	4	1+C3+0+C3+1	4	1+C3+0+C3+1	4
60" Custom	1+C2+2+C2+1	2	1+C2+2+C2+1	2	1+C2+2+C2+1	3	1+C2+1+C2+1	4	1+C3+1+C3+1	4	1+C3+1+C3+1	4
60" ¼-½-¼	1+C2+1+C2+1	2	1+C2+1+C2+1	2	1+C2+1+C2+1	3	1+C3+1+C3+1	4	1+C3+1+C3+1	4	1+C3+1+C3+1	4
60" ⅓-⅓-⅓	1+C2+0+C2+1	2	1+C2+0+C2+1	2	1+C3+0+C3+1	3	1+C3+0+C3+1	4	1+C3+0+C3+1	4	1+C3+0+C3+1	4
75" ¼-½-¼	1+C2+2+C2+1	2	1+C2+2+C2+1	2	1+C2+2+C2+1	3	1+C2+1+C2+1	4	1+C3+1+C3+1	4	1+C3+1+C3+1	4
75" ⅓-⅓-⅓	1+C2+0+C2+1	2	1+C3+0+C3+1	2	1+C3+0+C3+1	3	1+C3+0+C3+1	4	1+C4+0+C4+1	4	1+C4+0+C4+1	4
96" ⅓-⅓-⅓	1+C2+2+C2+1	2	1+C2+2+C2+1	2	1+C2+2+C2+1	3	1+C3+1+C3+1	4	1+C3+1+C3+1	4	1+C3+1+C3+1	4
96" Custom	2+C2+0+C2+2	2	2+C3+0+C3+2	2	2+C3+0+C3+2	3	2+C3+0+C3+2	4	2+C3+0+C3+2	4	2+C3+0+C3+2	4
120" ⅓-⅓-⅓	2+C2+2+C2+2	2	2+C2+2+C2+2	2	2+C2+2+C2+2	3	2+C3+2+C3+2	4	2+C3+2+C3+2	4	2+C3+2+C3+2	4

SEE TABLE 8 FOR DESIGN PRESSURE

** MIN. SASH SIZE = $\frac{\text{WINDOW WIDTH - 40.72}}{2}$

Max. Anchor O.C. Spacing for "Integral-Fin" Installation	Anchor Group E	Anchor Group F
	2.3"	4"

NOTES:
1) USE THESE TABLES FOR ALL WINDOWS INSTALLED THROUGH THE FRAME OR INTEGRAL FIN.
2) FRAME DIMENSIONS ARE BUCK WIDTH AND BUCK HEIGHT (SEE SHEETS 3-4). SASH SIZE IS AS PER THE FIGURE.
3) FOR SIZES NOT SHOWN, ROUND UP TO THE NEXT AVAILABLE WIDTH OR HEIGHT DIMENSION SHOWN ON THE TABLE.
4) "1/4-1/2-1/4" AND "1/3-1/3-1/3" INDICATE THAT THOSE STANDARD SASH CONFIGURATIONS FALL WITHIN THE SASH WIDTH RANGE IN THE ADJACENT COLUMN. "CUSTOM" INDICATES THAT NO STANDARD SASH CONFIGURATIONS FALL WITHIN THE RANGE.

Approved as complying with the Florida Building Code
Date Sept. 24, 2015
NOA# 15-0903.11
Miami Dade Product Control
By Manuel Perez

Rev 1	
Rev 2	

1070 TECHNOLOGY DRIVE
N. VENICE, FL 34275
P.O. BOX 1529
NOKOMIS, FL 34274
(941)-480-1600
CERT. OF AUTH. #29296

Series	Desc.	Title	Date	Drawn By	DWG No.	Rev.
HR-5410	NTS	HORIZONTAL ROLLER - NI	ANCHOR QUANTITY TABLES	05/15/15	J ROSOWSKI	MD-HR5410-01

Sheet 11 OF 15

ANTHONY LYNN MILLER
LICENSE
No. 58705
9/17/15
STATE OF FLORIDA
PROFESSIONAL ENGINEER

A. LYNN MILLER, P.E.
P.E.# 58705

TABLE 18:

Anchor Quantities for XOX Windows

Glass Types 2 - 4 / Reinf. Level R3		Sash Configuration	Sash Width Range (in)	24" Height Head & Sill	24" Height Jamb	30" Height Head & Sill	30" Height Jamb	36" Height Head & Sill	36" Height Jamb	48" Height Head & Sill	48" Height Jamb	54" Height Head & Sill	54" Height Jamb	63" Height Head & Sill	63" Height Jamb
				Anchor Group A											
Window Buck Width	35-1/4"	⅓-⅓-⅓	11.391 - 11.391	1+C2+0+C2+1	2	1+C2+0+C2+1	2	1+C2+0+C2+1	3	1+C2+0+C2+1	4	1+C2+0+C2+1	4	1+C2+0+C2+1	4
	38"	⅓-⅓-⅓	12.308 - 12.308	1+C2+0+C2+1	2	1+C2+0+C2+1	2	1+C2+0+C2+1	3	1+C2+0+C2+1	4	1+C2+0+C2+1	4	1+C3+0+C3+1	4
	45-1/8"	¼-½-¼	11.391 - 13.397	1+C2+0+C2+1	2	1+C2+0+C2+1	2	1+C2+0+C2+1	3	1+C3+0+C3+1	4	1+C3+0+C3+1	4	1+C4+0+C4+1	4
		⅓-⅓-⅓	13.398 - 14.683	1+C2+0+C2+1	2	1+C2+0+C2+1	2	1+C2+0+C2+1	3	1+C3+0+C3+1	4	1+C3+0+C3+1	4	1+C3+0+C3+1	4
	47-3/4"	¼-½-¼	11.391 - 12.297	1+C2+0+C2+1	2	1+C2+0+C2+1	2	1+C2+0+C2+1	3	1+C3+0+C3+1	4	1+C3+0+C3+1	4	1+C4+0+C4+1	4
		⅓-⅓-⅓	12.298 - 15.558	1+C2+0+C2+1	2	1+C2+0+C2+1	2	1+C2+0+C2+1	3	1+C3+0+C3+1	4	1+C3+0+C3+1	4	1+C3+0+C3+1	4
	52-1/8"	Custom	11.391 - 12.016	1+C2+0+C2+1	2	1+C2+0+C2+1	2	1+C3+0+C3+1	3	1+C3+0+C3+1	4	1+C4+0+C4+1	4	1+C4+0+C4+1	4
		¼-½-¼	12.017 - 13.397	1+C2+0+C2+1	2	1+C2+0+C2+1	2	1+C3+0+C3+1	3	1+C3+0+C3+1	4	1+C4+0+C4+1	4	1+C4+0+C4+1	4
		⅓-⅓-⅓	13.398 - 17.016	1+C2+0+C2+1	2	1+C2+0+C2+1	2	1+C3+0+C3+1	3	1+C3+0+C3+1	4	1+C4+0+C4+1	4	1+C4+0+C4+1	4
	60"	Custom	11.391 - 13.397	1+C2+2+C2+1	2	1+C2+2+C2+1	2	1+C2+2+C2+1	3	1+C3+2+C3+1	4	1+C3+2+C3+1	4	1+C3+2+C3+1	4
		¼-½-¼	13.398 - 15.360	1+C2+2+C2+1	2	1+C2+2+C2+1	2	1+C2+2+C2+1	3	1+C3+2+C3+1	4	1+C3+2+C3+1	4	1+C3+2+C3+1	4
		⅓-⅓-⅓	15.361 - 19.641	1+C2+0+C2+1	2	1+C2+0+C2+1	2	1+C3+0+C3+1	3	1+C4+0+C4+1	4	1+C4+0+C4+1	4	1+C4+0+C4+1	4
	75"	Custom	11.391 - 13.397	1+C2+3+C2+1	2	1+C2+3+C2+1	2	1+C2+4+C2+1	3	1+C3+4+C3+1	4	1+C3+4+C3+1	4	1+C3+3+C3+1	4
		¼-½-¼	13.398 - 19.110	1+C2+3+C2+1	2	1+C2+3+C2+1	2	1+C2+3+C2+1	3	1+C3+3+C3+1	4	1+C3+3+C3+1	4	1+C3+2+C3+1	4
		⅓-⅓-⅓	19.111 - 24.641	1+C2+0+C2+1	2	1+C3+0+C3+1	2	1+C3+0+C3+1	3	1+C4+0+C4+1	4	1+C4+0+C4+1	4	1+C4+0+C4+1	4
	96"	Custom	17.641 - 19.397	1+C2+4+C2+1	2	1+C2+4+C2+1	2	1+C2+4+C2+1	3	1+C3+4+C3+1	4	1+C3+4+C3+1	4	1+C3+3+C3+1	4
		¼-½-¼	19.398 - 24.360	1+C2+3+C2+1	2	1+C2+4+C2+1	2	1+C2+4+C2+1	3	1+C3+4+C3+1	4	1+C3+4+C3+1	4	1+C3+3+C3+1	4
		⅓-⅓-⅓	24.361 - 31.641	2+C2+3+C2+2	2	2+C2+3+C2+2	2	2+C2+3+C2+2	3	2+C3+3+C3+2	4	1+C3+2+C3+1	4	1+C3+2+C3+1	4
	120"	¼-½-¼	29.641 - 32.515	2+C2+4+C2+2	2	2+C2+4+C2+2	2	2+C2+4+C2+2	3	2+C3+4+C3+2	4	2+C3+4+C3+2	4	2+C3+3+C3+2	4
		⅓-⅓-⅓	32.516 - 39.641	2+C2+3+C2+2	2	3+C2+4+C2+3	2	3+C2+4+C2+3	3	2+C3+4+C3+2	4	2+C3+3+C3+2	4	2+C3+2+C3+2	4
	140"	Custom	** - 39.641	2+C2+4+C2+2	2	3+C2+4+C2+3	2	2+C2+4+C2+3	3	2+C3+4+C3+2	4	2+C3+4+C3+2	4	2+C3+3+C3+2	4
				Anchor Group B											
Window Buck Width	35-1/4"	⅓-⅓-⅓	11.391 - 11.391	1+C2+0+C2+1	2	1+C2+0+C2+1	2	1+C2+0+C2+1	3	1+C2+0+C2+1	4	1+C2+0+C2+1	4	1+C2+0+C2+1	4
	38"	⅓-⅓-⅓	12.308 - 12.308	1+C2+0+C2+1	2	1+C2+0+C2+1	2	1+C2+0+C2+1	3	1+C2+0+C2+1	4	1+C2+0+C2+1	4	1+C3+0+C3+1	4
	45-1/8"	¼-½-¼	11.391 - 13.397	1+C2+0+C2+1	2	1+C2+0+C2+1	2	1+C2+0+C2+1	3	1+C3+0+C3+1	4	1+C3+0+C3+1	4	1+C4+0+C4+1	4
		⅓-⅓-⅓	13.398 - 14.683	1+C2+0+C2+1	2	1+C2+0+C2+1	2	1+C2+0+C2+1	3	1+C3+0+C3+1	4	1+C3+0+C3+1	4	1+C3+0+C3+1	4
	47-3/4"	¼-½-¼	11.391 - 12.297	1+C2+0+C2+1	2	1+C2+0+C2+1	2	1+C2+0+C2+1	3	1+C3+0+C3+1	4	1+C3+0+C3+1	4	1+C4+0+C4+1	4
		⅓-⅓-⅓	12.298 - 15.558	1+C2+0+C2+1	2	1+C2+0+C2+1	2	1+C2+0+C2+1	3	1+C3+0+C3+1	4	1+C3+0+C3+1	4	1+C3+0+C3+1	4
	52-1/8"	Custom	11.391 - 12.016	1+C2+0+C2+1	2	1+C2+0+C2+1	2	1+C3+0+C3+1	3	1+C3+0+C3+1	4	1+C4+0+C4+1	4	1+C4+0+C4+1	4
		¼-½-¼	12.017 - 13.397	1+C2+0+C2+1	2	1+C2+0+C2+1	2	1+C3+0+C3+1	3	1+C3+0+C3+1	4	1+C4+0+C4+1	4	1+C4+0+C4+1	4
		⅓-⅓-⅓	13.398 - 17.016	1+C2+0+C2+1	2	1+C2+0+C2+1	2	1+C3+0+C3+1	3	1+C3+0+C3+1	4	1+C4+0+C4+1	4	1+C4+0+C4+1	4
	60"	Custom	11.391 - 13.397	1+C2+2+C2+1	2	1+C2+2+C2+1	2	1+C2+2+C2+1	3	1+C3+2+C3+1	4	1+C3+2+C3+1	4	1+C3+2+C3+1	4
		¼-½-¼	13.398 - 15.360	1+C2+1+C2+1	2	1+C2+2+C2+1	2	1+C2+2+C2+1	3	1+C3+2+C3+1	4	1+C3+1+C3+1	4	1+C3+1+C3+1	4
		⅓-⅓-⅓	15.361 - 19.641	1+C2+0+C2+1	2	1+C2+0+C2+1	2	1+C3+0+C3+1	3	1+C4+0+C4+1	4	1+C4+0+C4+1	4	1+C4+0+C4+1	4
	75"	Custom	11.391 - 13.397	1+C2+2+C2+1	2	1+C2+3+C2+1	2	1+C2+3+C2+1	3	1+C3+3+C3+1	4	1+C3+3+C3+1	4	1+C3+2+C3+1	4
		¼-½-¼	13.398 - 19.110	1+C2+2+C2+1	2	1+C2+2+C2+1	2	1+C2+3+C2+1	3	1+C3+3+C3+1	4	1+C3+2+C3+1	4	1+C3+2+C3+1	4
		⅓-⅓-⅓	19.111 - 24.641	1+C2+0+C2+1	2	1+C3+0+C3+1	2	1+C3+0+C3+1	3	1+C4+0+C4+1	4	1+C4+0+C4+1	4	1+C4+0+C4+1	4
	96"	Custom	17.641 - 19.397	1+C2+3+C2+1	2	1+C2+3+C2+1	2	1+C2+3+C2+1	3	1+C3+3+C3+1	4	1+C3+3+C3+1	4	1+C3+3+C3+1	4
		¼-½-¼	19.398 - 24.360	1+C2+3+C2+1	2	1+C2+3+C2+1	2	1+C2+3+C2+1	3	1+C3+3+C3+1	4	1+C3+3+C3+1	4	1+C3+2+C3+1	4
		⅓-⅓-⅓	24.361 - 31.641	1+C2+2+C2+1	2	2+C2+2+C2+2	2	2+C2+3+C2+2	3	1+C3+2+C3+1	4	1+C3+2+C3+1	4	1+C3+2+C3+1	4
	120"	¼-½-¼	29.641 - 32.515	2+C2+3+C2+2	2	2+C2+3+C2+2	2	2+C2+3+C2+2	3	2+C3+3+C3+2	4	2+C3+3+C3+2	4	2+C3+2+C3+2	4
		⅓-⅓-⅓	32.516 - 39.641	2+C2+3+C2+2	2	2+C2+3+C2+2	2	2+C2+3+C2+2	3	2+C3+3+C3+2	4	2+C3+2+C3+2	4	2+C3+2+C3+2	4
	140"	Custom	** - 39.641	2+C2+3+C2+2	2	2+C2+3+C2+2	2	2+C2+3+C2+2	3	2+C3+3+C3+2	4	2+C3+3+C3+2	4	2+C3+2+C3+2	4

Glass Types 2 - 4 / Reinf. Level R3		Sash Configuration	Sash Width Range (in)	24" Height Head & Sill	24" Height Jamb	30" Height Head & Sill	30" Height Jamb	36" Height Head & Sill	36" Height Jamb	48" Height Head & Sill	48" Height Jamb	54" Height Head & Sill	54" Height Jamb	63" Height Head & Sill	63" Height Jamb
				Anchor Group C											
Window Buck Width	35-1/4"	⅓-⅓-⅓	11.391 - 11.391	1+C2+0+C2+1	2	1+C2+0+C2+1	2	1+C2+0+C2+1	3	1+C2+0+C2+1	4	1+C2+0+C2+1	4	1+C2+0+C2+1	4
	38"	⅓-⅓-⅓	12.308 - 12.308	1+C2+0+C2+1	2	1+C2+0+C2+1	2	1+C2+0+C2+1	3	1+C2+0+C2+1	4	1+C2+0+C2+1	4	1+C3+0+C3+1	4
	45-1/8"	¼-½-¼	11.391 - 13.397	1+C2+0+C2+1	2	1+C2+0+C2+1	2	1+C2+0+C2+1	3	1+C3+0+C3+1	4	1+C3+0+C3+1	4	1+C4+0+C4+1	4
		⅓-⅓-⅓	13.398 - 14.683	1+C2+0+C2+1	2	1+C2+0+C2+1	2	1+C2+0+C2+1	3	1+C3+0+C3+1	4	1+C3+0+C3+1	4	1+C3+0+C3+1	4
	47-3/4"	¼-½-¼	11.391 - 12.297	1+C2+0+C2+1	2	1+C2+0+C2+1	2	1+C2+0+C2+1	3	1+C3+0+C3+1	4	1+C3+0+C3+1	4	1+C4+0+C4+1	4
		⅓-⅓-⅓	12.298 - 15.558	1+C2+0+C2+1	2	1+C2+0+C2+1	2	1+C2+0+C2+1	3	1+C3+0+C3+1	4	1+C3+0+C3+1	4	1+C3+0+C3+1	4
	52-1/8"	Custom	11.391 - 12.016	1+C2+0+C2+1	2	1+C2+0+C2+1	2	1+C3+0+C3+1	3	1+C3+0+C3+1	4	1+C4+0+C4+1	4	1+C4+0+C4+1	4
		¼-½-¼	12.017 - 13.397	1+C2+0+C2+1	2	1+C2+0+C2+1	2	1+C3+0+C3+1	3	1+C3+0+C3+1	4	1+C4+0+C4+1	4	1+C4+0+C4+1	4
		⅓-⅓-⅓	13.398 - 17.016	1+C2+0+C2+1	2	1+C2+0+C2+1	2	1+C3+0+C3+1	3	1+C3+0+C3+1	4	1+C4+0+C4+1	4	1+C4+0+C4+1	4
	60"	Custom	11.391 - 13.397	1+C2+2+C2+1	2	1+C2+2+C2+1	2	1+C2+2+C2+1	3	1+C3+2+C3+1	4	1+C3+2+C3+1	4	1+C3+1+C3+1	4
		¼-½-¼	13.398 - 15.360	1+C2+1+C2+1	2	1+C2+1+C2+1	2	1+C2+1+C2+1	3	1+C3+1+C3+1	4	1+C3+1+C3+1	4	1+C3+1+C3+1	4
		⅓-⅓-⅓	15.361 - 19.641	1+C2+0+C2+1	2	1+C2+0+C2+1	2	1+C3+0+C3+1	3	1+C4+0+C4+1	4	1+C4+0+C4+1	4	1+C4+0+C4+1	4
	75"	Custom	11.391 - 13.397	1+C2+2+C2+1	2	1+C2+2+C2+1	2	1+C2+2+C2+1	3	1+C3+2+C3+1	4	1+C3+3+C3+1	4	1+C3+2+C3+1	4
		¼-½-¼	13.398 - 19.110	1+C2+2+C2+1	2	1+C2+2+C2+1	2	1+C2+2+C2+1	3	1+C3+2+C3+1	4	1+C3+2+C3+1	4	1+C3+2+C3+1	4
		⅓-⅓-⅓	19.111 - 24.641	1+C2+0+C2+1	2	1+C3+0+C3+1	2	1+C3+0+C3+1	3	1+C4+0+C4+1	4	1+C4+0+C4+1	4	1+C4+0+C4+1	4
	96"	Custom	17.641 - 19.397	1+C2+3+C2+1	2	1+C2+3+C2+1	2	1+C2+3+C2+1	3	1+C3+3+C3+1	4	1+C3+3+C3+1	4	1+C3+3+C3+1	4
		¼-½-¼	19.398 - 24.360	1+C2+3+C2+1	2	1+C2+3+C2+1	2	1+C2+3+C2+1	3	1+C3+3+C3+1	4	1+C3+3+C3+1	4	1+C3+2+C3+1	4
		⅓-⅓-⅓	24.361 - 31.641	1+C2+2+C2+1	2	1+C2+2+C2+1	2	1+C2+2+C2+1	3	1+C3+2+C3+1	4	1+C3+2+C3+1	4	1+C3+2+C3+1	4
	120"	¼-½-¼	29.641 - 32.515	2+C2+3+C2+2	2	2+C2+3+C2+2	2	2+C2+3+C2+2	3	2+C3+3+C3+2	4	2+C3+3+C3+2	4	2+C3+2+C3+2	4
		⅓-⅓-⅓	32.516 - 39.641	2+C2+3+C2+2	2	2+C2+3+C2+2	2	2+C2+3+C2+2	3	2+C3+3+C3+2	4	2+C3+2+C3+2	4	2+C3+2+C3+2	4
	140"	Custom	** - 39.641	2+C2+3+C2+2	2	2+C2+3+C2+2	2	2+C2+3+C2+2	3	2+C3+3+C3+2	4	2+C3+3+C3+2	4	2+C3+2+C3+2	4
				Anchor Group D											
Window Buck Width	35-1/4"	⅓-⅓-⅓	11.391 - 11.391	1+C2+0+C2+1	2	1+C2+0+C2+1	2	1+C2+0+C2+1	3	1+C2+0+C2+1	4	1+C2+0+C2+1	4	1+C2+0+C2+1	4
	38"	⅓-⅓-⅓	12.308 - 12.308	1+C2+0+C2+1	2	1+C2+0+C2+1	2	1+C2+0+C2+1	3	1+C2+0+C2+1	4	1+C2+0+C2+1	4	1+C3+0+C3+1	4
	45-1/8"	¼-½-¼	11.391 - 13.397	1+C2+0+C2+1	2	1+C2+0+C2+1	2	1+C2+0+C2+1	3	1+C3+0+C3+1	4	1+C3+0+C3+1	4	1+C4+0+C4+1	4
		⅓-⅓-⅓	13.398 - 14.683	1+C2+0+C2+1	2	1+C2+0+C2+1	2	1+C2+0+C2+1	3	1+C3+0+C3+1	4	1+C3+0+C3+1	4	1+C3+0+C3+1	4
	47-3/4"	¼-½-¼	11.391 - 12.297	1+C2+0+C2+1	2	1+C2+0+C2+1	2	1+C2+0+C2+1	3	1+C3+0+C3+1	4	1+C3+0+C3+1	4	1+C4+0+C4+1	4
		⅓-⅓-⅓	12.298 - 15.558	1+C2+0+C2+1	2	1+C2+0+C2+1	2	1+C2+0+C2+1	3	1+C3+0+C3+1	4	1+C3+0+C3+1	4	1+C3+0+C3+1	4
	52-1/8"	Custom	11.391 - 12.016	1+C2+0+C2+1	2	1+C2+0+C2+1	2	1+C3+0+C3+1	3	1+C3+0+C3+1	4	1+C4+0+C4+1	4	1+C4+0+C4+1	4
		¼-½-¼	12.017 - 13.397	1+C2+0+C2+1	2	1+C2+0+C2+1	2	1+C3+0+C3+1	3	1+C3+0+C3+1	4	1+C4+0+C4+1	4	1+C4+0+C4+1	4
		⅓-⅓-⅓	13.398 - 17.016	1+C2+0+C2+1	2	1+C2+0+C2+1	2	1+C3+0+C3+1	3	1+C3+0+C3+1	4	1+C4+0+C4+1	4	1+C4+0+C4+1	4
	60"	Custom	11.391 - 13.397	1+C2+2+C2+1	2	1+C2+2+C2+1	2	1+C2+2+C2+1	3	1+C3+2+C3+1	4	1+C3+2+C3+1	4	1+C3+1+C3+1	4
		¼-½-¼	13.398 - 15.360	1+C2+1+C2+1	2	1+C2+1+C2+1	2	1+C2+1+C2+1	3	1+C3+1+C3+1	4	1+C3+1+C3+1	4	1+C3+1+C3+1	4
		⅓-⅓-⅓	15.361 - 19.641	1+C2+0+C2+1	2	1+C2+0+C2+1	2	1+C3+0+C3+1	3	1+C4+0+C4+1	4	1+C4+0+C4+1	4	1+C4+0+C4+1	4
	75"	Custom	11.391 - 13.397	1+C2+2+C2+1	2	1+C2+2+C2+1	2	1+C2+2+C2+1	3	1+C3+3+C3+1	4	1+C3+3+C3+1	4	1+C3+2+C3+1	4
		¼-½-¼	13.398 - 19.110	1+C2+2+C2+1	2	1+C2+2+C2+1	2	1+C2+2+C2+1	3	1+C3+2+C3+1	4	1+C3+2+C3+1	4	1+C3+2+C3+1	4
		⅓-⅓-⅓	19.111 - 24.641	1+C2+0+C2+1	2	1+C3+0+C3+1	2	1+C3+0+C3+1	3	1+C4+0+C4+1	4	1+C4+0+C4+1	4	1+C4+0+C4+1	4
	96"	Custom	17.641 - 19.397	1+C2+3+C2+1	2	1+C2+3+C2+1	2	1+C2+3+C2+1	3	1+C3+3+C3+1	4	1+C3+3+C3+1	4	1+C3+3+C3+1	4
		¼-½-¼	19.398 - 24.360	1+C2+3+C2+1	2	1+C2+3+C2+1	2	1+C2+3+C2+1	3	1+C3+3+C3+1	4	1+C3+3+C3+1	4	1+C3+2+C3+1	4
		⅓-⅓-⅓	24.361 - 31.641	1+C2+2+C2+1	2	2+C2+2+C2+2	2	2+C2+3+C2+2	3	1+C3+2+C3+1	4	1+C3+2+C3+1	4	1+C3+2+C3+1	4
	120"	¼-½-¼	29.641 - 32.515	2+C2+3+C2+2	2	2+C2+3+C2+2	2	2+C2+3+C2+2	3	2+C3+3+C3+2	4	2+C3+3+C3+2	4	2+C3+2+C3+2	4
		⅓-⅓-⅓	32.516 - 39.641	2+C2+3+C2+2	2	2+C2+3+C2+2	2	2+C2+3+C2+2	3	2+C3+3+C3+2	4	2+C3+2+C3+2	4	2+C3+2+C3+2	4
	140"	Custom	** - 39.641	2+C2+3+C2+2	2	2+C2+3+C2+2	2	2+C2+3+C2+2	3	2+C3+3+C3+2	4	2+C3+3+C3+2	4	2+C3+2+C3+2	4

SEE TABLE 9 FOR DESIGN PRESSURE

Max. Anchor O.C. Spacing for "Integral-Fin" Installation	Anchor Group E	Anchor Group F
	2"	3.7"

** MIN. SASH SIZE = $\frac{\text{WINDOW WIDTH - 60.72}}{2}$

NOTES:
1) USE THESE TABLES FOR ALL WINDOWS INSTALLED THROUGH THE FRAME OR INTEGRAL FIN.
2) FRAME DIMENSIONS ARE BUCK WIDTH AND BUCK HEIGHT (SEE SHEETS 3-4). SASH SIZE IS AS PER THE FIGURE.
3) FOR SIZES NOT SHOWN, ROUND UP TO THE NEXT AVAILABLE WIDTH OR HEIGHT DIMENSION SHOWN ON THE TABLE.
4) "1/4-1/2-1/4" AND "1/3-1/3-1/3" INDICATE THAT THOSE STANDARD SASH CONFIGURATIONS FALL WITHIN THE SASH WIDTH RANGE IN THE ADJACENT COLUMN. "CUSTOM" INDICATES THAT NO STANDARD SASH CONFIGURATIONS FALL WITHIN THE RANGE.

Approved as complying with the Florida Building Code
Date Sept 24, 2015
MDAR 15-0903.11
Miami-Dade Product Control
By Manuel Perez

Rev 1	
Rev 2	

1070 TECHNOLOGY DRIVE
N. VENICE, FL 34275
P.O. BOX 1529
NOKOMIS, FL 34274
(941)-480-1600
CERT. OF AUTH. #29296

Series	Desc.	Title	Scale	Sheet	DWG No.	Rev.
HR-5410	HORIZONTAL ROLLER - NI	ANCHOR QUANTITY TABLES	NTS	12 OF 15	MD-HR5410-01	

Drawn By	Date
J ROSOWSKI	05/15/15

ANTHONY LYNN MILLER
LICENSE
No. 58705
9/17/15
STATE OF FLORIDA
PROFESSIONAL ENGINEER

A. LYNN MILLER, P.E.
P.E.# 58705

TABLE 19:

Anchor Quantities for XOX Windows

Glass Types 2 - 4 / Reinf. Level R4	Sash Configuration	Sash Width Range (in)	24" Height Head & Sill	24" Height Jamb	30" Height Head & Sill	30" Height Jamb	36" Height Head & Sill	36" Height Jamb	48" Height Head & Sill	48" Height Jamb	54" Height Head & Sill	54" Height Jamb	63" Height Head & Sill	63" Height Jamb
			Anchor Group A											
Window Buck Width 35-1/4"	⅓-⅓-⅓	11.391 - 11.391	Not Allowed											
38"	⅓-⅓-⅓	12.308 - 12.308												
45-1/8"	¼-½-¼	11.391 - 13.397												
	⅓-⅓-⅓	13.398 - 14.683												
47-3/4"	¼-½-¼	11.391 - 12.297												
	⅓-⅓-⅓	12.298 - 15.558												
52-1/8"	Custom	11.391 - 12.016												
	¼-½-¼	12.017 - 13.397												
	⅓-⅓-⅓	13.398 - 17.016												
60"	Custom	11.391 - 13.397												
	¼-½-¼	13.398 - 15.360												
	⅓-⅓-⅓	15.361 - 19.641												
75"	Custom	11.391 - 13.397												
	¼-½-¼	13.398 - 19.110												
	⅓-⅓-⅓	19.111 - 24.641												
96"	Custom	17.641 - 19.397												
	¼-½-¼	19.398 - 24.360												
	⅓-⅓-⅓	24.361 - 31.641												
120"	¼-½-¼	29.641 - 32.515												
	⅓-⅓-⅓	32.516 - 39.641												
140"	Custom	** - 39.641												
			Anchor Group B											
Window Buck Width 35-1/4"	⅓-⅓-⅓	11.391 - 11.391	1+C2+0+C2+1	2	1+C2+0+C2+1	2	1+C2+0+C2+1	3	1+C2+0+C2+1	4	1+C2+0+C2+1	4	1+C2+0+C2+1	4
38"	⅓-⅓-⅓	12.308 - 12.308	1+C2+0+C2+1	2	1+C2+0+C2+1	2	1+C2+0+C2+1	3	1+C3+0+C3+1	4	1+C3+0+C3+1	4	1+C3+0+C3+1	4
45-1/8"	¼-½-¼	11.391 - 13.397	1+C2+0+C2+1	2	1+C2+0+C2+1	2	1+C3+0+C3+1	3	1+C4+0+C4+1	4	1+C4+0+C4+1	4	1+C4+0+C4+1	4
	⅓-⅓-⅓	13.398 - 14.683	1+C2+0+C2+1	2	1+C2+0+C2+1	2	1+C3+0+C3+1	3	1+C3+0+C3+1	4	1+C3+0+C3+1	4	1+C3+0+C3+1	4
47-3/4"	¼-½-¼	11.391 - 12.297	1+C2+0+C2+1	2	1+C3+0+C3+1	2	1+C3+0+C3+1	3	1+C4+0+C4+1	4	1+C4+0+C4+1	4	1+C4+0+C4+1	4
	⅓-⅓-⅓	12.298 - 15.558	1+C2+0+C2+1	2	1+C3+0+C3+1	2	1+C3+0+C3+1	3	1+C3+0+C3+1	4	1+C3+0+C3+1	4	1+C3+0+C3+1	4
52-1/8"	Custom	11.391 - 12.016	1+C2+0+C2+1	2	1+C3+0+C3+1	2	1+C3+0+C3+1	3	1+C4+0+C4+1	4	1+C5+0+C5+1	4	1+C5+0+C5+1	4
	¼-½-¼	12.017 - 13.397	1+C2+0+C2+1	2	1+C3+0+C3+1	2	1+C3+0+C3+1	3	1+C4+0+C4+1	4	1+C5+0+C5+1	4	1+C5+0+C5+1	4
	⅓-⅓-⅓	13.398 - 17.016	1+C2+0+C2+1	2	1+C3+0+C3+1	2	1+C3+0+C3+1	3	1+C4+0+C4+1	4	1+C4+0+C4+1	4	1+C4+0+C4+1	4
60"	Custom	11.391 - 13.397	1+C2+2+C2+1	2	1+C2+2+C2+1	2	1+C3+2+C3+1	3	1+C4+2+C4+1	4	1+C4+2+C4+1	4	1+C4+2+C4+1	4
	¼-½-¼	13.398 - 15.360	1+C2+2+C2+1	2	1+C2+2+C2+1	2	1+C3+2+C3+1	3	1+C4+2+C4+1	4	1+C4+2+C4+1	4	1+C4+2+C4+1	4
	⅓-⅓-⅓	15.361 - 19.641	1+C2+0+C2+1	2	1+C3+0+C3+1	2	1+C4+0+C4+1	3	1+C5+0+C5+1	4	1+C5+0+C5+1	4	1+C5+0+C5+1	4
75"	Custom	11.391 - 13.397	1+C2+3+C2+1	2	1+C2+3+C2+1	2	1+C3+4+C3+1	3	1+C4+4+C4+1	4	1+C4+4+C4+1	4	1+C4+3+C4+1	4
	¼-½-¼	13.398 - 19.110	1+C2+3+C2+1	2	1+C2+3+C2+1	2	1+C3+3+C3+1	3	1+C4+3+C4+1	4	1+C4+3+C4+1	4	1+C4+2+C4+1	4
	⅓-⅓-⅓	19.111 - 24.641	1+C3+0+C3+1	2	1+C4+0+C4+1	2	1+C4+0+C4+1	3	1+C5+0+C5+1	4	1+C5+0+C5+1	4	1+C5+0+C5+1	4
96"	Custom	17.641 - 19.397	1+C2+3+C2+1	2	1+C2+4+C2+1	2	1+C3+4+C3+1	3	1+C4+5+C4+1	4	1+C4+4+C4+1	4	1+C4+4+C4+1	4
	¼-½-¼	19.398 - 24.360	1+C2+3+C2+1	2	1+C2+4+C2+1	2	1+C3+4+C3+1	3	1+C4+4+C4+1	4	1+C4+4+C4+1	4	1+C4+3+C4+1	4
	⅓-⅓-⅓	24.361 - 31.641	2+C2+3+C2+2	2	2+C2+3+C2+2	2	2+C3+3+C3+2	3	2+C4+3+C4+2	4	2+C4+3+C4+2	4	1+C4+2+C4+1	4
120"	¼-½-¼	29.641 - 32.515	2+C2+3+C2+2	2	2+C2+4+C2+2	2	2+C3+4+C3+2	3	2+C4+5+C4+2	4	2+C4+4+C4+2	4	2+C4+3+C4+2	4
	⅓-⅓-⅓	32.516 - 39.641	2+C2+3+C2+2	2	2+C2+4+C2+2	2	3+C3+4+C3+2	3	2+C4+4+C4+2	4	2+C4+3+C4+2	4	2+C4+3+C4+2	4
140"	Custom	** - 39.641	2+C2+3+C2+2	2	2+C2+4+C2+2	2	3+C3+4+C3+2	3	2+C4+4+C4+2	4	2+C4+4+C4+2	4	2+C4+3+C4+2	4

Glass Types 2 - 4 / Reinf. Level R4	Sash Configuration	Sash Width Range (in)	24" Height Head & Sill	24" Height Jamb	30" Height Head & Sill	30" Height Jamb	36" Height Head & Sill	36" Height Jamb	48" Height Head & Sill	48" Height Jamb	54" Height Head & Sill	54" Height Jamb	63" Height Head & Sill	63" Height Jamb
			Anchor Group C											
Window Buck Width 35-1/4"	⅓-⅓-⅓	11.391 - 11.391	1+C2+0+C2+1	2	1+C2+0+C2+1	2	1+C2+0+C2+1	3	1+C2+0+C2+1	4	1+C2+0+C2+1	4	1+C2+0+C2+1	4
38"	⅓-⅓-⅓	12.308 - 12.308	1+C2+0+C2+1	2	1+C2+0+C2+1	2	1+C2+0+C2+1	3	1+C3+0+C3+1	4	1+C3+0+C3+1	4	1+C3+0+C3+1	4
45-1/8"	¼-½-¼	11.391 - 13.397	1+C2+0+C2+1	2	1+C2+0+C2+1	2	1+C3+0+C3+1	3	1+C4+0+C4+1	4	1+C4+0+C4+1	4	1+C4+0+C4+1	4
	⅓-⅓-⅓	13.398 - 14.683	1+C2+0+C2+1	2	1+C2+0+C2+1	2	1+C3+0+C3+1	3	1+C3+0+C3+1	4	1+C3+0+C3+1	4	1+C3+0+C3+1	4
47-3/4"	¼-½-¼	11.391 - 12.297	1+C2+0+C2+1	2	1+C3+0+C3+1	2	1+C3+0+C3+1	3	1+C4+0+C4+1	4	1+C4+0+C4+1	4	1+C4+0+C4+1	4
	⅓-⅓-⅓	12.298 - 15.558	1+C2+0+C2+1	2	1+C3+0+C3+1	2	1+C3+0+C3+1	3	1+C3+0+C3+1	4	1+C3+0+C3+1	4	1+C3+0+C3+1	4
52-1/8"	Custom	11.391 - 12.016	1+C2+0+C2+1	2	1+C3+0+C3+1	2	1+C3+0+C3+1	3	1+C4+0+C4+1	4	1+C5+0+C5+1	4	1+C5+0+C5+1	4
	¼-½-¼	12.017 - 13.397	1+C2+0+C2+1	2	1+C3+0+C3+1	2	1+C3+0+C3+1	3	1+C4+0+C4+1	4	1+C5+0+C5+1	4	1+C5+0+C5+1	4
	⅓-⅓-⅓	13.398 - 17.016	1+C2+0+C2+1	2	1+C3+0+C3+1	2	1+C3+0+C3+1	3	1+C4+0+C4+1	4	1+C4+0+C4+1	4	1+C4+0+C4+1	4
60"	Custom	11.391 - 13.397	1+C2+2+C2+1	2	1+C2+2+C2+1	2	1+C3+2+C3+1	3	1+C4+2+C4+1	4	1+C4+2+C4+1	4	1+C4+2+C4+1	4
	¼-½-¼	13.398 - 15.360	1+C2+2+C2+1	2	1+C2+2+C2+1	2	1+C3+2+C3+1	3	1+C4+2+C4+1	4	1+C4+2+C4+1	4	1+C4+1+C4+1	4
	⅓-⅓-⅓	15.361 - 19.641	1+C2+0+C2+1	2	1+C3+0+C3+1	2	1+C4+0+C4+1	3	1+C5+0+C5+1	4	1+C5+0+C5+1	4	1+C5+0+C5+1	4
75"	Custom	11.391 - 13.397	1+C2+2+C2+1	2	1+C2+3+C2+1	2	1+C3+3+C3+1	3	1+C4+3+C4+1	4	1+C4+3+C4+1	4	1+C4+3+C4+1	4
	¼-½-¼	13.398 - 19.110	1+C2+2+C2+1	2	1+C2+3+C2+1	2	1+C3+3+C3+1	3	1+C4+3+C4+1	4	1+C4+3+C4+1	4	1+C4+2+C4+1	4
	⅓-⅓-⅓	19.111 - 24.641	1+C3+0+C3+1	2	1+C4+0+C4+1	2	1+C4+0+C4+1	3	1+C5+0+C5+1	4	1+C5+0+C5+1	4	1+C5+0+C5+1	4
96"	Custom	17.641 - 19.397	1+C2+3+C2+1	2	1+C2+3+C2+1	2	1+C3+4+C3+1	3	1+C4+4+C4+1	4	1+C4+4+C4+1	4	1+C4+3+C4+1	4
	¼-½-¼	19.398 - 24.360	1+C2+3+C2+1	2	1+C2+3+C2+1	2	1+C3+3+C3+1	3	1+C4+4+C4+1	4	1+C4+3+C4+1	4	1+C4+3+C4+1	4
	⅓-⅓-⅓	24.361 - 31.641	2+C2+2+C2+2	2	2+C2+3+C2+2	2	2+C3+3+C3+2	3	2+C4+3+C4+2	4	2+C4+3+C4+2	4	2+C4+3+C4+2	4
120"	¼-½-¼	29.641 - 32.515	2+C2+3+C2+2	2	2+C2+4+C2+2	2	2+C3+4+C3+2	3	2+C4+4+C4+2	4	2+C4+4+C4+2	4	2+C4+3+C4+2	4
	⅓-⅓-⅓	32.516 - 39.641	2+C2+3+C2+2	2	2+C2+4+C2+2	2	2+C3+4+C3+2	3	2+C4+4+C4+2	4	2+C4+3+C4+2	4	2+C4+2+C4+2	4
140"	Custom	** - 39.641	2+C2+3+C2+2	2	2+C2+4+C2+2	2	2+C3+4+C3+2	3	2+C4+4+C4+2	4	2+C4+4+C4+2	4	2+C4+3+C4+2	4
			Anchor Group D											
Window Buck Width 35-1/4"	⅓-⅓-⅓	11.391 - 11.391	1+C2+0+C2+1	2	1+C2+0+C2+1	2	1+C2+0+C2+1	3	1+C2+0+C2+1	4	1+C2+0+C2+1	4	1+C2+0+C2+1	4
38"	⅓-⅓-⅓	12.308 - 12.308	1+C2+0+C2+1	2	1+C2+0+C2+1	2	1+C2+0+C2+1	3	1+C3+0+C3+1	4	1+C3+0+C3+1	4	1+C3+0+C3+1	4
45-1/8"	¼-½-¼	11.391 - 13.397	1+C2+0+C2+1	2	1+C2+0+C2+1	2	1+C3+0+C3+1	3	1+C4+0+C4+1	4	1+C4+0+C4+1	4	1+C4+0+C4+1	4
	⅓-⅓-⅓	13.398 - 14.683	1+C2+0+C2+1	2	1+C2+0+C2+1	2	1+C3+0+C3+1	3	1+C3+0+C3+1	4	1+C3+0+C3+1	4	1+C3+0+C3+1	4
47-3/4"	¼-½-¼	11.391 - 12.297	1+C2+0+C2+1	2	1+C3+0+C3+1	2	1+C3+0+C3+1	3	1+C4+0+C4+1	4	1+C4+0+C4+1	4	1+C4+0+C4+1	4
	⅓-⅓-⅓	12.298 - 15.558	1+C2+0+C2+1	2	1+C3+0+C3+1	2	1+C3+0+C3+1	3	1+C3+0+C3+1	4	1+C3+0+C3+1	4	1+C3+0+C3+1	4
52-1/8"	Custom	11.391 - 12.016	1+C2+0+C2+1	2	1+C3+0+C3+1	2	1+C3+0+C3+1	3	1+C4+0+C4+1	4	1+C5+0+C5+1	4	1+C5+0+C5+1	4
	¼-½-¼	12.017 - 13.397	1+C2+0+C2+1	2	1+C3+0+C3+1	2	1+C3+0+C3+1	3	1+C4+0+C4+1	4	1+C5+0+C5+1	4	1+C5+0+C5+1	4
	⅓-⅓-⅓	13.398 - 17.016	1+C2+0+C2+1	2	1+C3+0+C3+1	2	1+C3+0+C3+1	3	1+C4+0+C4+1	4	1+C4+0+C4+1	4	1+C4+0+C4+1	4
60"	Custom	11.391 - 13.397	1+C2+2+C2+1	2	1+C2+2+C2+1	2	1+C3+2+C3+1	3	1+C4+2+C4+1	4	1+C4+2+C4+1	4	1+C4+2+C4+1	4
	¼-½-¼	13.398 - 15.360	1+C2+2+C2+1	2	1+C2+2+C2+1	2	1+C3+2+C3+1	3	1+C4+2+C4+1	4	1+C4+2+C4+1	4	1+C4+1+C4+1	4
	⅓-⅓-⅓	15.361 - 19.641	1+C2+0+C2+1	2	1+C3+0+C3+1	2	1+C4+0+C4+1	3	1+C5+0+C5+1	4	1+C5+0+C5+1	4	1+C5+0+C5+1	4
75"	Custom	11.391 - 13.397	1+C2+2+C2+1	2	1+C2+3+C2+1	2	1+C3+3+C3+1	3	1+C4+3+C4+1	4	1+C4+3+C4+1	4	1+C4+3+C4+1	4
	¼-½-¼	13.398 - 19.110	1+C2+2+C2+1	2	1+C2+3+C2+1	2	1+C3+3+C3+1	3	1+C4+3+C4+1	4	1+C4+3+C4+1	4	1+C4+2+C4+1	4
	⅓-⅓-⅓	19.111 - 24.641	1+C3+0+C3+1	2	1+C4+0+C4+1	2	1+C4+0+C4+1	3	1+C5+0+C5+1	4	1+C5+0+C5+1	4	1+C5+0+C5+1	4
96"	Custom	17.641 - 19.397	1+C2+3+C2+1	2	1+C2+3+C2+1	2	1+C3+4+C3+1	3	1+C4+4+C4+1	4	1+C4+4+C4+1	4	1+C4+3+C4+1	4
	¼-½-¼	19.398 - 24.360	1+C2+3+C2+1	2	1+C2+3+C2+1	2	1+C3+3+C3+1	3	1+C4+4+C4+1	4	1+C4+3+C4+1	4	1+C4+3+C4+1	4
	⅓-⅓-⅓	24.361 - 31.641	2+C2+2+C2+2	2	2+C2+2+C2+2	2	2+C3+3+C3+2	3	2+C4+3+C4+2	4	1+C4+2+C4+1	4	1+C4+2+C4+1	4
120"	¼-½-¼	29.641 - 32.515	2+C2+3+C2+2	2	2+C2+3+C2+2	2	2+C3+4+C3+2	3	2+C4+4+C4+2	4	2+C4+3+C4+2	4	2+C4+3+C4+2	4
	⅓-⅓-⅓	32.516 - 39.641	2+C2+3+C2+2	2	2+C2+3+C2+2	2	2+C3+3+C3+2	3	2+C4+3+C4+2	4	2+C4+3+C4+2	4	2+C4+2+C4+2	4
140"	Custom	** - 39.641	2+C2+3+C2+2	2	2+C2+3+C2+2	2	2+C3+4+C3+2	3	2+C4+4+C4+2	4	2+C4+3+C4+2	4	2+C4+3+C4+2	4

SEE TABLE 12 FOR DESIGN PRESSURE

Max. Anchor O.C. Spacing for "Integral-Fin" Installation	Anchor Group F
	2.5"

** MIN. SASH SIZE = $\frac{\text{WINDOW WIDTH} - 60.72}{2}$

NOTES:
1) USE THESE TABLES FOR ALL WINDOWS INSTALLED THROUGH THE FRAME OR INTEGRAL FIN.
2) FRAME DIMENSIONS ARE BUCK WIDTH AND BUCK HEIGHT (SEE SHEETS 3-4). SASH SIZE IS AS PER THE FIGURE.
3) FOR SIZES NOT SHOWN, ROUND UP TO THE NEXT AVAILABLE WIDTH OR HEIGHT DIMENSION SHOWN ON THE TABLE.
4) "1/4-1/2-1/4" AND "1/3-1/3-1/3" INDICATE THAT THOSE STANDARD SASH CONFIGURATIONS FALL WITHIN THE SASH WIDTH RANGE IN THE ADJACENT COLUMN. "CUSTOM" INDICATES THAT NO STANDARD SASH CONFIGURATIONS FALL WITHIN THE RANGE.

Approved as complying with the Florida Building Code
Date Sept. 24, 2015
NOA# 15-0903.11
Miami Dade Product Control
By Manuel Perez

Rev.	
Rev 1	
Rev 2	

1070 TECHNOLOGY DRIVE
N. VENICE, FL 34275
P.O. BOX 1529
NOKOMIS, FL 34274
(941)-480-1600
CERT. OF AUTH. #29296

Title	Desc.	Series	Sheet	Scale	DWG No.	Drawn By	Date	Rev.
ANCHOR QUANTITY TABLES	HORIZONTAL ROLLER - NI	HR-5410	13 OF 15	NTS	MD-HR5410-01	J ROSOWSKI	05/15/15	

ANTHONY LYNN MILLER
LICENSE
No. 58705
STATE OF FLORIDA
PROFESSIONAL ENGINEER
9/17/15

A. LYNN MILLER, P.E.
P.E.# 58705

TABLE 20:

Bill of Material

#	Part #	Description	Material
1	620121	Frame Head, Sill and Jambs - J-Channel	PVC
2	620122	Frame Head, Sill and Jambs - Flange	PVC
3	620123	Frame Head, Sill and Jambs - Fin	PVC
4	620124	Frame Head, Sill and Jambs - Equal Leg	PVC
13	620172	Anti-Lift Insert / Trim Cover	PVC
14	620131	Fixed Meeting Rail	PVC
15	620158	Track Insert	6063 T6 Al
16	620129	Sash Rail (Sides, Top & Bottom)	PVC
19	620156	Pull Rail Interlock	6063 T6 Al
20	620144	Pull Rail Interlock Cover	PVC
21	620150	Light Sash Reinforcement	6063 T6 Al
22	620151	Standard Sash Reinforcement	6063 T6 Al
23	620152	HD Sash Reinforcement	6063 T6 Al
24	620153	Standard Meeting Rail Reinforcement	6005 T5 Al
25	620154	HD Meeting Rail Reinforcement	6005 T5 Al
26	620155	H.D. Horiz. Roller Meeting Rail Reinforcement	6005 T5 Al
28	61644	Weatherstrip, .187" x .270" Fin Pile	
29	61719	Weatherstrip, .187" x .220" Poly Pile	
30		#8 x 1" Ph. PH SDS (Interlock Mounting Screw)	410 SS
31	78X312PPA	#8 x 3-1/2" Ph. PH SMS (Fixed Meeting Rail Screw)	410 SS
32	71669SP	Meeting Rail Screw Support Plate	6063 T5 Al
33	720210	Weep Hole Cover	PVC
34	720187	Installation Screw Hole Plug	PVC
37	720197	Auto Lock	C Steel
38	720199	Sweep Lock	Cast Zinc
39	720196	Auto Lock Cover Assembly	Cast Zinc
40		#6 x 1-1/8" Ph. FH SDS (Auto and Sweep Lock Screw)	SS
41	720200	Auto and Sweep Lock Keeper	Cast Zinc
42	76X34PPA	#6 x 3/4" PH. PH SDS (Keeper Screw)	SS
43	7612FPTX	#6 x 1/2" FPH TEK	SS
44		Leadstile Top Corner Key	Nylon
45		Leadstile Bottom Corner Key	Nylon
46		Lockstile Top Corner Key	Nylon
47		Lockstile Bottom Corner Key	Nylon
48	720204	Wheel	Nylon
73	620136	I.G. Bead	PVC
74		Backbedding, GE 7700 or Dow 791	Silicone
75	71684/5	Setting Block (7/8" x 2" x 1/8"), 85 +/- 5 duro.	EPDM
76		Super Spacer nXT with Hot Melt Butyl	Composite
77		Duraseal	Composite
78		Cardinal XL Edge Spacer	Composite
80	61011	Roll-formed Screen	Alum
81	61012	Extruded Screen Frame	Alum
82		Extruded Screen Spreader Bar	Alum
83	47042W	Screen Corner Key with Pull Ring	PVC
84	47041W/CKGLB	Screen Corner Key No Pull Ring	PVC
85	7CASPM	Tension Spring	SS
86	61816C48	Screen Cloth	Fiberglass
87	61635/61614	.140" Screen Spline (Machine/Hand Rolled)	Vinyl

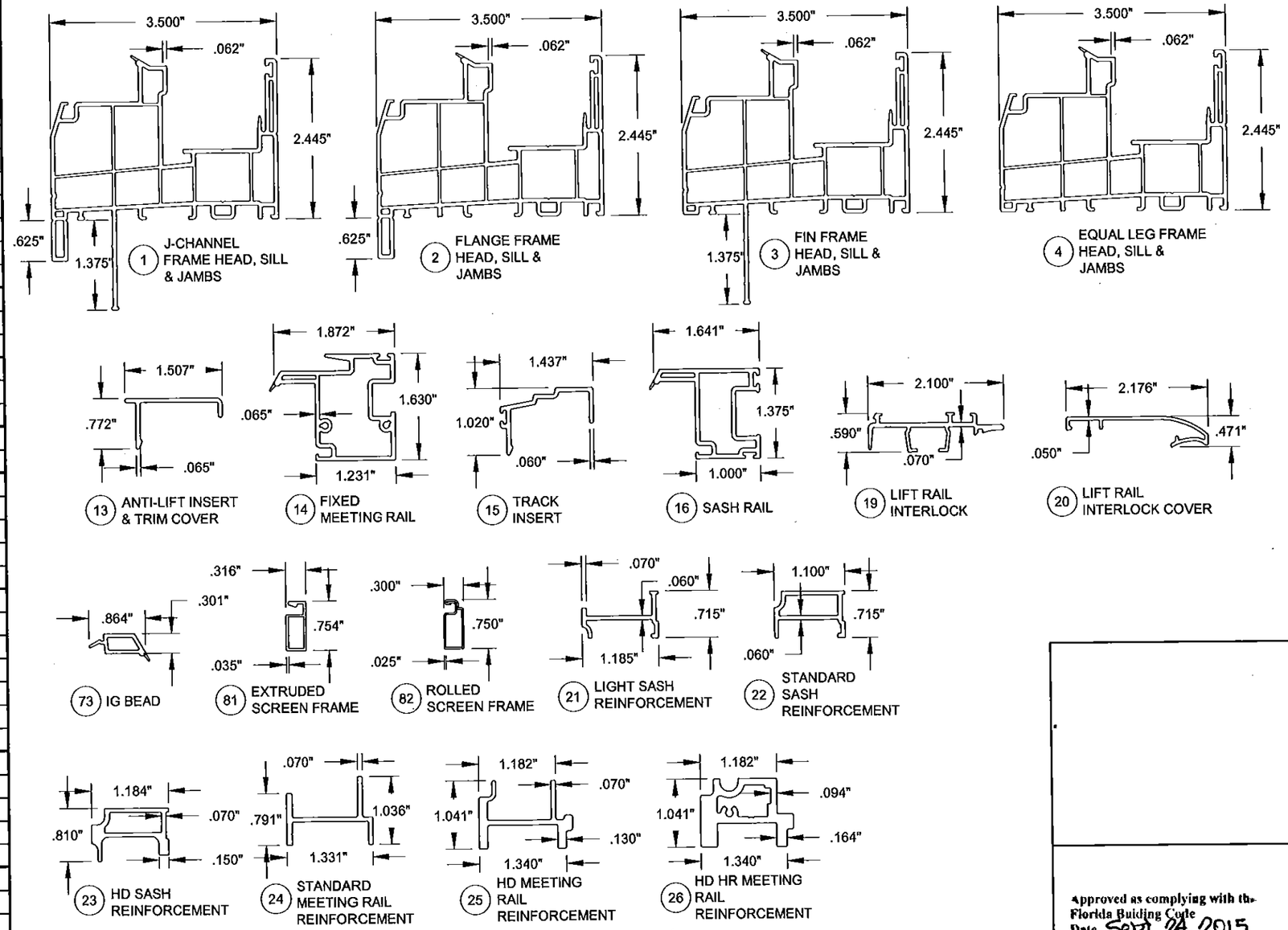

NOTES:

1) ITEMS # 5-12, 17, 18, 27, 35, 36, 49-72 & 79 ARE NOT USED AND ARE NOT PART OF THIS APPROVAL.

2) PVC BY ROYAL WINDOW AND DOOR PROFILES, LTD., TO BE LABELED FOR AAMA EXTRUDER CODE.

ANTHONY LYNN MILLER
LICENSE
No. 58705
STATE OF FLORIDA
PROFESSIONAL ENGINEER
9/17/15
A. LYNN MILLER, P.E.
P.E.# 58705

PGT®

1070 TECHNOLOGY DRIVE
N. VENICE, FL 34275
P.O. BOX 1529
NOKOMIS, FL 34274

CERT. OF AUTH. #29296

Revised By:	Date:	Revision:
Revised By:	Date:	Revision:

Approved as complying with the Florida Buiding Code
Date Sept. 24, 2015
NOA# 15-0903.11
Miami Dade Product Control
By Manuel Perez

Description: WINDOW EXTRUSIONS & BOM				Drawn By: J ROSOWSKI
Title: HORIZONTAL ROLLER - NI				Date: 05/15/15
Series/Model: HR-5410	Scale: NTS	Sheet: 14 OF 15	Drawing No. MD-HR5410-01	Rev:

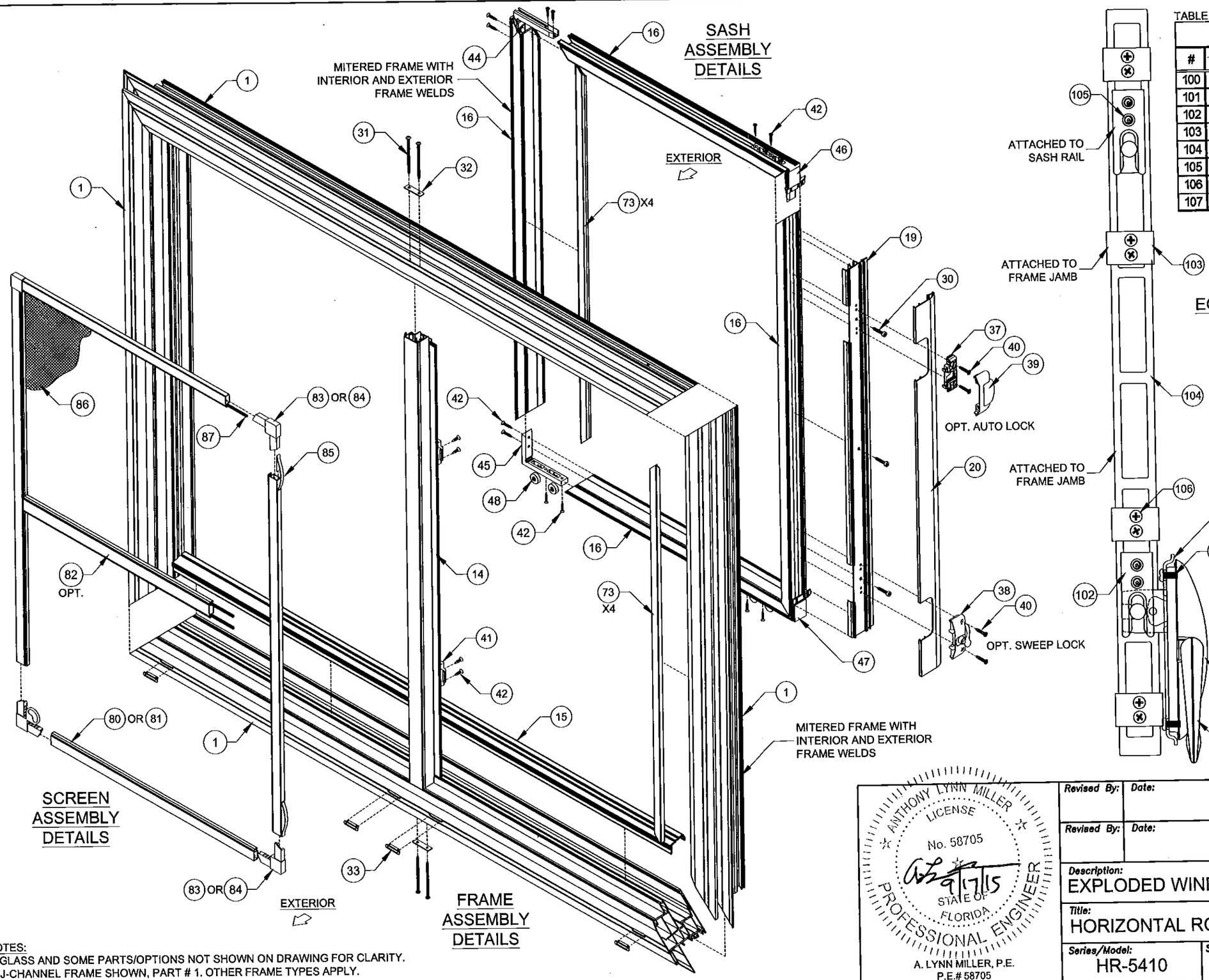

TABLE 21:

Egress Lock Bill of Material

#	Part #	Description	Material
100	7MC7024	Multi-Point Lock Operator	Cast Zinc
101	73340	Operator mounting Plate	Steel
102	72015	Multipoint Lock Keeper	Aluminum
103	720214	Multipoint Lock Guide	Nylon
104	220217-221	Tie Bar (Length Varies)	Stainless Steel
105	71024X12HFX	#10 x 1/2" HH MS	Stainless Steel
106	78X1FPAX	#8 x 1" Ph. FH SMS	Stainless Steel
107	78X75FPTX	#8 x 3/4" Ph. FH SDS	Stainless Steel

Approved as complying with the Florida Building Code
Date Sept. 24, 2015
NOA# 15-0903.11
Miami Dade Product Control
By Manuel Perez

PGT®

1070 TECHNOLOGY DRIVE
N. VENICE, FL 34275
(941)-480-1600

CERT. OF AUTH. #29296

ANTHONY LYNN MILLER LICENSE No. 58705 STATE OF FLORIDA PROFESSIONAL ENGINEER
9/17/15
A. LYNN MILLER, P.E.
P.E.# 58705

Revised By:	Date:	Revision:
Revised By:	Date:	Revision:

Description:	Drawn By:
EXPLODED WINDOW VIEW	J ROSOWSKI

Title:	Date:
HORIZONTAL ROLLER - NI	05/15/15

Series/Model:	Scale:	Sheet:	Drawing No.	Rev:
HR-5410	NTS	15 OF 15	MD-HR5410-01	

NOTES:
1) GLASS AND SOME PARTS/OPTIONS NOT SHOWN ON DRAWING FOR CLARITY.
2) J-CHANNEL FRAME SHOWN, PART # 1. OTHER FRAME TYPES APPLY.
3) FOR REINFORCEMENT TYPES, SEE DETAILS ON SHEETS 6-8.