MIAMI-DADE COUNTY
DEPARTMENT OF REGULATORY AND ECONOMIC RESOURCES (RER)
BOARD AND CODE ADMINISTRATION DIVISION

MIAMI-DADE COUNTY
PRODUCT CONTROL SECTION
11805 SW 26 Street, Room 208
T (786) 315-2590 F (786) 315-2599
www.miamidade.gov/economy

NOTICE OF ACCEPTANCE (NOA)

U.S. Aluminum (FL)
Division of C.R. Laurence Company
7500 NW 69th Avenue
Miami, FL 33166

SCOPE:

This NOA is being issued under the applicable rules and regulations governing the use of construction materials. The documentation submitted has been reviewed and accepted by Miami-Dade County RER - Product Control Section to be used in Miami Dade County and other areas where allowed by the Authority Having Jurisdiction (AHJ).

This NOA shall not be valid after the expiration date stated below. The Miami-Dade County Product Control Section (In Miami Dade County) and/or the AHJ (in areas other than Miami Dade County) reserve the right to have this product or material tested for quality assurance purposes. If this product or material fails to perform in the accepted manner, the manufacturer will incur the expense of such testing and the AHJ may immediately revoke, modify, or suspend the use of such product or material within their jurisdiction. RER reserves the right to revoke this acceptance, if it is determined by Miami-Dade County Product Control Section that this product or material fails to meet the requirements of the applicable building code.

This product is approved as described herein, and has been designed to comply with the Florida Building Code, including the High Velocity Hurricane Zone.

DESCRIPTION: Series "DH-350" Aluminum Inswing Entrance Door-Impact -L.M.I

APPROVAL DOCUMENT: Drawing N0. **W06-81 Rev F,** titled "Series-DH-350 Alum Inswing Door", sheets 1 through 10 of 10, prepared by Al-Farooq Corporation, dated 11/22/06 and last revised on 04/0416, signed and sealed by Javad Ahmad, P.E., bearing the Miami-Dade County Product Control Revision stamp with the Notice of Acceptance number and expiration date by the Miami-Dade County Product Control Section.

MISSILE IMPACT RATING: Large and Small Missile Impact Resistant

Limitations:

1. This door can be installed in US Aluminum series DHS-500 Storefront System (under separate NOA), lower design pressure of door or storefront shall control for the entire assembly.
2. The Doors are not rated for water infiltration resistant.
3. The Narrow frame jamb item #3 (5"x1"x3.5") is rated to max. DP=70 psf only.

LABELING: Each unit shall bear a permanent label with the manufacturer's name or logo, city, state, model/series, and following statement: "Miami-Dade County Product Control Approved", unless otherwise noted herein.

RENEWAL of this NOA shall be considered after a renewal application has been filed and there has been no change in the applicable building code negatively affecting the performance of this product.

TERMINATION of this NOA will occur after the expiration date or if there has been a revision or change in the materials, use, and/or manufacture of the product or process. Misuse of this NOA as an endorsement of any product, for sales, advertising or any other purposes shall automatically terminate this NOA. Failure to comply with any section of this NOA shall be cause for termination and removal of NOA.

ADVERTISEMENT: The NOA number preceded by the words Miami-Dade County, Florida, and followed by the expiration date may be displayed in advertising literature. If any portion of the NOA is displayed, then it shall be done in its entirety.

MIAMI-DADE COUNTY APPROVED

07/27/16

MIAMI-DADE COUNTY
PRODUCT CONTROL SECTION
11805 SW 26 Street, Room 208
T (786) 315-2590 F (786) 315-2599
www.miamidade.gov/economy

NOTICE OF ACCEPTANCE (NOA)

INSPECTION: A copy of this entire NOA shall be provided to the user by the manufacturer or its distributors and shall be available for inspection at the job site at the request of the Building Official.This NOA **revises NOA# 12-0406.01** and consists of page 1, this page 2 and evidence pages E-1 and E-2, as well as approval document mentioned above.
The submitted documentation was reviewed by **Jorge M. Plasencia, P.E.**

MIAMI-DADE COUNTY APPROVED

07/21/16

U. S. Aluminum (FL),
Division of C. R. Laurence Company

NOTICE OF ACCEPTANCE: EVIDENCE SUBMITTED

A. DRAWINGS

1. Manufacturer's die drawings and sections.
   (Submitted under NOA# 08-0618.06)
2. Drawing N0. **W06-81 Rev F,** titled "Series-DH-350 Alum Inswing Door", sheets 1 through 10 of 10, prepared by Al-Farooq Corporation, dated 11/22/06 and last revised on 04/04/16, signed and sealed by Javad Ahmad, P.E.

B. TESTS *(transferred from file # 08-0618.06/ # 07-0220.07)*

1. Test reports on: 1) Air Infiltration Test, per FBC, TAS 202-94
   2) Uniform Static Air Pressure Test, Loading per FBC TAS 202-94
   3) Water Resistance Test, per FBC, TAS 202-94
   4) Large Missile Impact Test per FBC, TAS 201-94
   5) Cyclic Wind Pressure Loading per FBC, TAS 203-94
   6) Forced Entry Test, per FBC 2411 3.2.1, TAS 202-94

   along with marked-up drawings and installation diagram of aluminum Inswing entrance door, prepared by Fenestration Testing Laboratory, Inc., Test Reports No. **FTL-5047,** dated 11/09/06 signed and sealed by Edmundo Largaespada, P. E.
2. Additional test reports ***(original in file # 07-0220.07)***
   1) Air Infiltration Test, per FBC, TAS 202-94
   2) Uniform Static Air Pressure Test, Loading per FBC TAS 202-94
   3) Water Resistance Test, per FBC, TAS 202-94
   4) Large Missile Impact Test per FBC, TAS 201-94
   5) Cyclic Wind Pressure Loading per FBC, TAS 203-94
   6) Forced Entry Test, per FBC 2411 3.2.1, TAS 202-94

   Along with marked-up drawings and installation diagram of a aluminum outswing entrance door w/ transom and outswing doors w/ sidelites & transom , prepared by Fenestration Testing Laboratory, Inc., Test Report No(s) **FTL-4254**, dated 06/28/04, **FTL-4306,** dated 08/31/04 and **FTL-4320**, dated 09/15/04, all signed and sealed by Edmundo Largaespada, P.E.

C. CALCULATIONS

1. Anchor verification calculations and structural analysis, complying with FBC-2014, prepared by Al Farooq Corporation, dated 08/13/15 and last revised on 06/14/16, signed and sealed by Javad Ahmad, P.E.
2. Glazing complies with **ASTM E1300-09**

D. QUALITY ASSURANCE

1. Miami-Dade Department of Regulatory and Economic Resources (RER)

Jorge M. Plasencia, P.E.
Product Control Unit Supervisor
NOA No. 15-0915.03
Expiration Date: April 26, 2017
Approval Date: August 04, 2017

NOTICE OF ACCEPTANCE: EVIDENCE SUBMITTED

E. MATERIAL CERTIFICATIONS

1. Notice of Acceptance No. **11-0624.02** issued to Kuraray America., Inc. for their "**Sentry Glass ® (Clear and White) interlayer**", expiring on 07/04/18.

F. STATEMENTS

1. Statement letter of conformance and letter of no financial interest, prepared by Al Farooq Corporation, dated 08/18/15, signed and sealed by Javad Ahmad, P.E.
2. Lab compliance as part of the above referenced test reports.
3. Press Release dated August 25, 2011, issued by C. R. Laurence Company, Inc. of announcement of C. R. Laurance (CRL) and U. S. Aluminum Company (USAL) on the integration of Delta Doors with U.S. Aluminum, Florida.
   (Submitted under NOA# 12-0406.01)
4. Press Release dated 07/08/11, issued by C. R. Laurence Company, Inc. (CRL) announcing the Acquisition of U.S. Aluminum Company (USAL).
   (Submitted under NOA# 12-0406.01)

G. OTHER

1. Notice of Acceptance No. **12-0406.01**, issued to US Aluminum (FL) – Division of CR Laurence Company, Inc. for their Series "DH-350" Aluminum Inswing Entrance Door – Impact, approved on 08/30/12 and expiring on 04/26/17.
2. Test proposals dated 11/08/11 approved by PERA # 02-0472 dated 07-05-02 & #06-0182 dated 6/7/6 issued by BCCO.

Jorge M. Plasencia, P.E.
Product Control Unit Supervisor
NOA No. 15-0915.03
Expiration Date: April 26, 2017
Approval Date: August 04, 2017

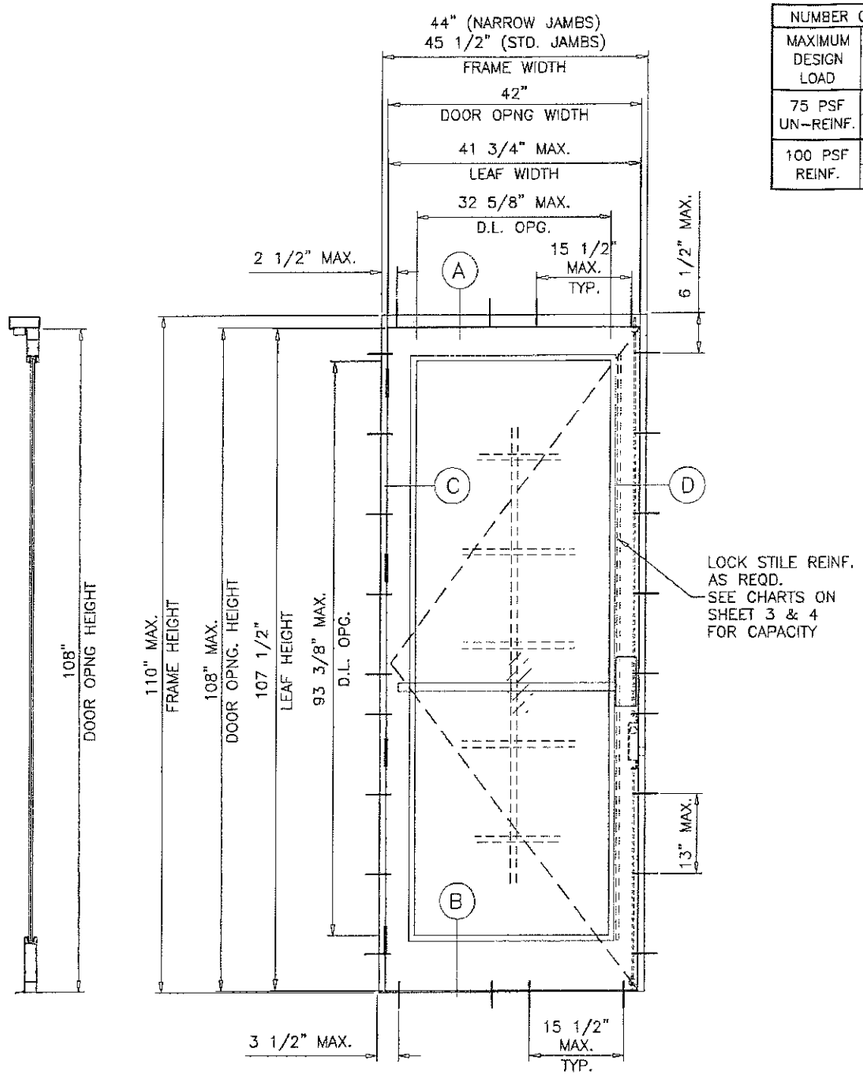

NUMBER OF ANCHORS AT MTG. STILE ENDS				
MAXIMUM DESIGN LOAD	DOOR OPNG. HEIGHTS UPTO	SUBSTRATE		
		WOOD	CONC.	METAL
75 PSF UN-REINF.	80"-96 IN.	5	3	3
	108 IN.	5	4	4
100 PSF REINF.	80'-96 IN.	6	4	4
	108 IN.	7	5	5

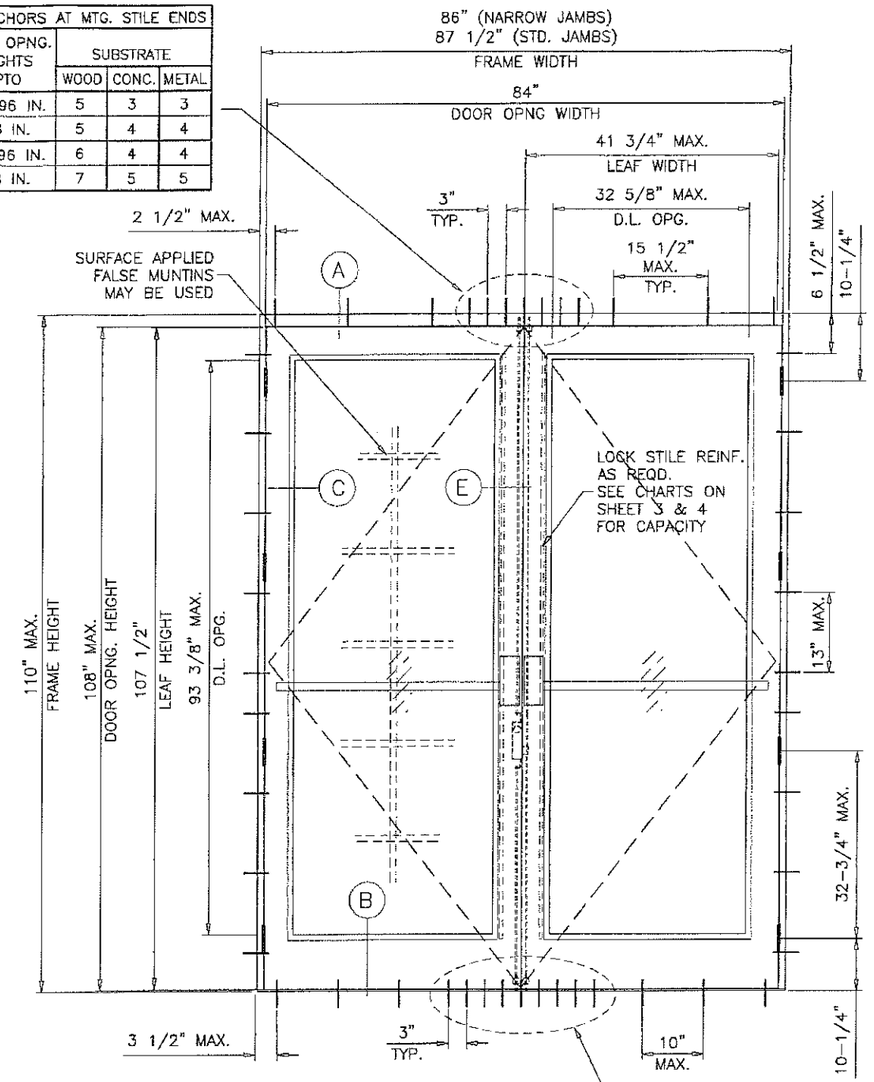

TYPICAL ELEVATIONS

NO. OF ANCHORS AT MTG. STILE ENDS		
MAXIMUM DESIGN LOAD	DOOR OPNG. HEIGHTS UPTO	SUBSTRATE
		CONC.
75 PSF UN-REINF.	80"-96 IN.	6
	108 IN.	7
100 PSF REINF.	80'-96 IN.	8
	108 IN.	9

THESE DOORS ARE RATED FOR LARGE & SMALL MISSILE IMPACT. SHUTTERS ARE NOT REQUIRED.

SERIES DH-350
ALUMINUM IN-SWING ENTRANCE DOOR

SEE CHARTS ON SHEET 3 FOR DESIGN LOAD CAPACITY OF SINGLE (X) AND DOUBLE (XX) DOORS W/O TRANSOM.

SEE CHARTS ON SHEET 4 FOR DESIGN LOAD CAPACITY OF SINGLE (O/X) AND DOUBLE (O/XX) DOORS WITH TRANSOM.

DOORS CAN ALSO BE USED WITH DHS-500 STOREFRONT SYSTEM. FOR DOORS WITH STOREFRONT SYSTEM SEE SEPARATE NOA FOR DOOR MULLION CAPACITY.

THE LOWEST VALUE RESULTING FROM DOOR CAPACITY CHARTS OR STOREFRONT NOA WILL APPLY TO ENTIRE SYSTEM.

DOORS NOT APPROVED FOR INSTALLATIONS WHERE WATER INFILTRATION RESISTANCE IS REQUIRED.

THIS PRODUCT HAS BEEN DESIGNED AND TESTED TO COMPLY WITH THE REQUIREMENTS OF THE 2014 (5TH EDITION) FLORIDA BUILDING CODE INCLUDING HIGH VELOCITY HURRICANE ZONE (HVHZ).

1BY OR 2BY WOOD BUCKS BY OTHERS, MUST BE ANCHORED PROPERLY TO TRANSFER LOADS TO THE STRUCTURE.

ANCHORS SHALL BE AS LISTED, SPACED AS SHOWN ON DETAILS, ANCHORS EMBEDMENT TO BASE MATERIAL SHALL BE BEYOND WALL DRESSING OR STUCCO.

ANCHORING OR LOADING CONDITIONS NOT SHOWN IN THESE DETAILS ARE NOT PART OF THIS APPROVAL.

A LOAD DURATION INCREASE IS USED IN DESIGN OF ANCHORS INTO WOOD ONLY.

ALL SHIMS TO BE HIGH IMPACT, NON-METALLIC AND NON-COMPRESSIBLE.

MATERIALS INCLUDING BUT NOT LIMITED TO STEEL/METAL SCREWS, THAT COME INTO CONTACT WITH OTHER DISSIMILAR MATERIALS SHALL MEET THE REQUIREMENTS OF THE 2014 FLORIDA BUILDING CODE.

PRODUCT REVISED
as complying with the Florida Building Code
NOA-No. 15-0915.03
Expiration Date 04/26/2017
By
Miami-Dade Product Control

JUN 2 1 2016

JAVAD AHMAD
LICENSE
No. 70592
STATE OF FLORIDA
PROFESSIONAL ENGINEER

AL-FAROOQ CORPORATION
ENGINEERS & PRODUCT DEVELOPMENT
9360 SUNSET DRIVE, SUITE 220
MIAMI, FLORIDA 33173
(C.A.N. 3538)
TEL. (305) 264-3100 FAX. (305) 262-6978
COMP-ANL\W06-81DD

Series 'DH-350' Aluminum In-Swing Door (L.M.I.)

US Aluminum
Division Of C.R. Laurence Co., Inc.
7500 N.W. 69TH AVE.
MIAMI, FL 33166
TEL. (305) 888-0077 FAX. (305) 884-3111

revisions:			
no	date	by:	description
C	05.09.12		GENERAL REVISION
D	08.08.12		REV. PER PERA COMMENTS
E	08.19.15		UPDATED TO 2014 FBC
F	04.04.16		REV. PER RER COMMENTS

date: 11-22-06
scale: 1/2"=1'-0"
dr. by: TARIQ
chk. by:

drawing no. W06-81

sheet 1 of 10

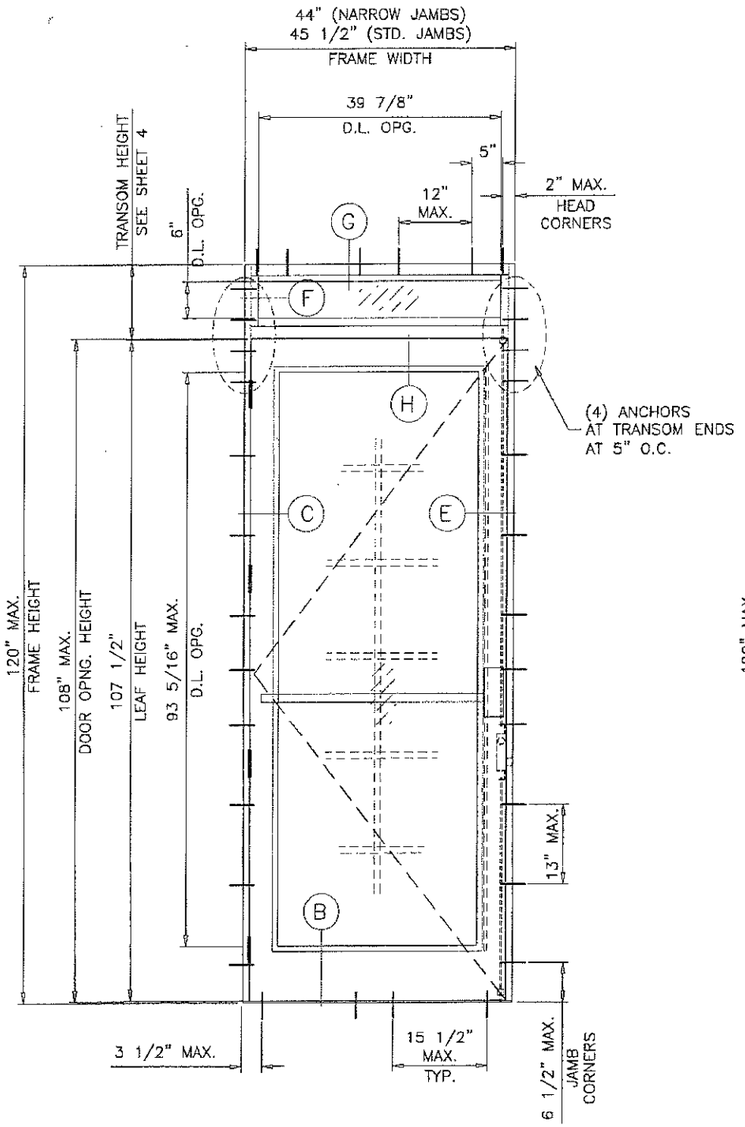

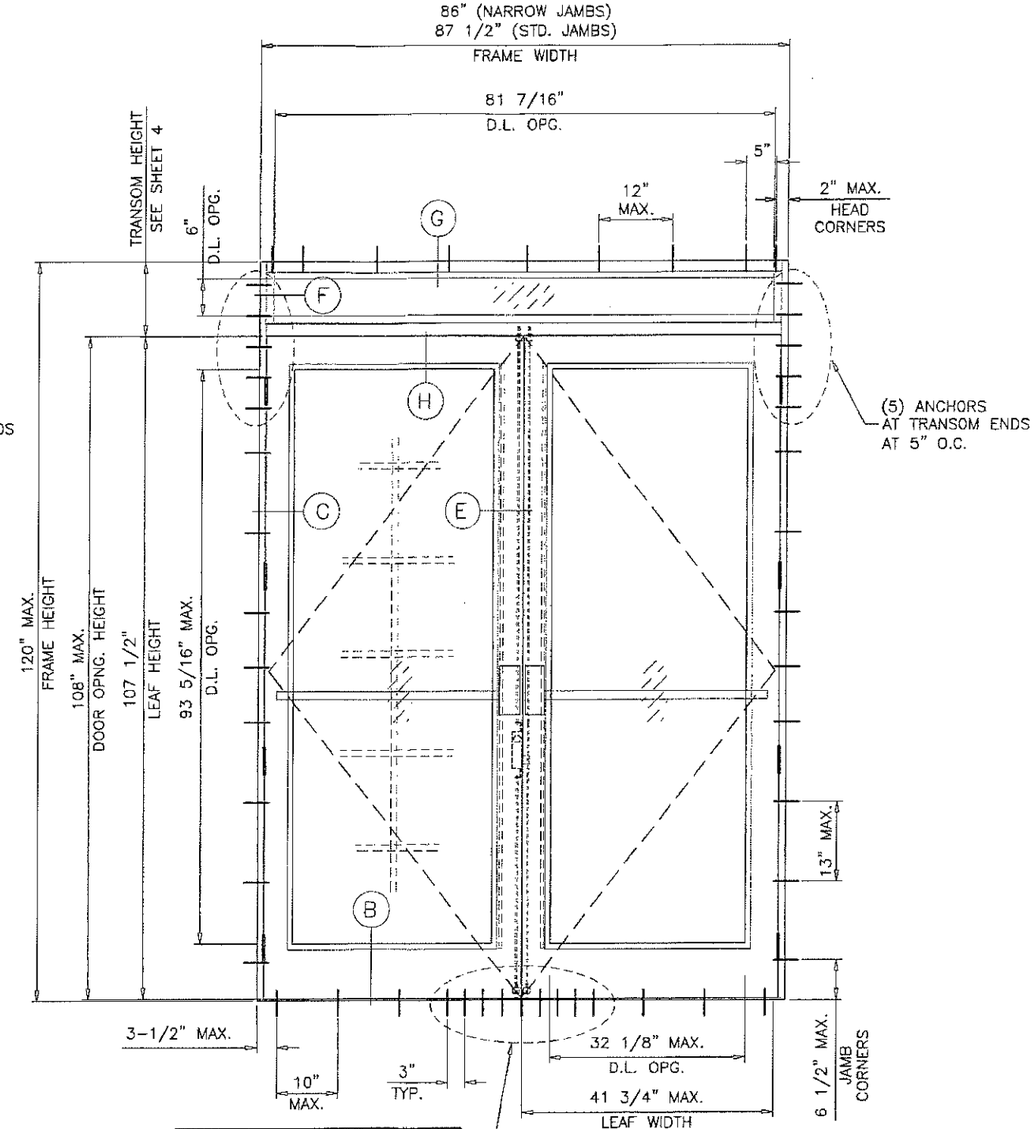

NO. OF ANCHORS AT MTG. STILE ENDS		
MAXIMUM DESIGN LOAD	DOOR OPNG. HEIGHTS UPTO	SUBSTRATE CONC.
75 PSF UN-REINF.	80"-96 IN.	6
	108 IN.	7
100 PSF REINF.	80"-96 IN.	8
	108 IN.	9

TYPICAL ELEVATIONS

PRODUCT REVISED
as complying with the Florida Building Code
NOA-No. 15-0915.03
Expiration Date 04/26/2017
By
Miami-Dade Product Control

JUN 2 1 2015

JAWAD AHMAD
LICENSE
No. 70592
STATE OF FLORIDA
PROFESSIONAL ENGINEER

AL-FAROOQ CORPORATION
ENGINEERS & PRODUCT DEVELOPMENT
9360 SUNSET DRIVE, SUITE 220
MIAMI, FLORIDA 33173 (C.A.N. 3538)
TEL. (305) 264-8100 FAX. (305) 262-6978

COMP-ANL\W06-81DD

Series 'DH-350' Aluminum In-Swing Door (L.M.I.)

US Aluminum
Division Of C.R. Laurence Co., Inc.
7500 N.W. 69TH AVE.
MIAMI, FL 33166
TEL. (305) 888-0077 FAX. (305) 884-3111

revisions:

no	date	by	description
D	08.06.12		REV. PER PERA COMMENTS
E	08.19.15		UPDATED TO 2014 FBC
F	04.04.16		REV. PER RER COMMENTS

date: 11-22-06
scale: 1/2"=1'-0"
dr. by: TARIQ
chk. by:

drawing no. W06-81

sheet 2 of 10

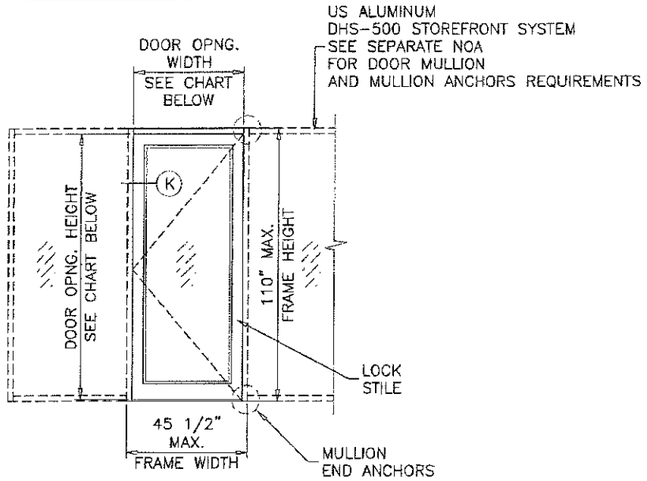

(X)

NOTE:
GLASS CAPACITIES ON THIS SHEET ARE BASED ON ASTM E1300-09 (3 SEC. GUSTS) AND FLORIDA BUILDING COMMISSION DECLARATORY STATEMENT DCA05-DEC-219

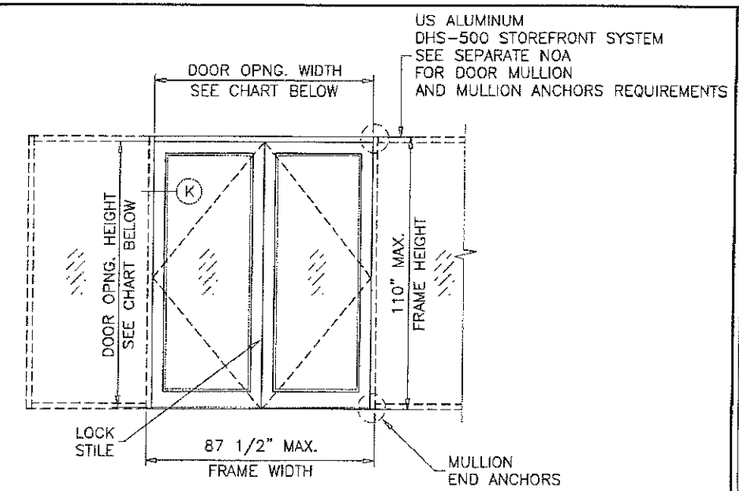

(XX)

SINGLE ENTRANCE DOORS W/O TRANSOM			
DESIGN LOAD CAPACITY - PSF			
NOMINAL DIMS.		LOCK STILE UN-REINFORCED	LOCK STILE REINFORCED
DOOR OPNG. WIDTH	DOOR OPNG. HEIGHT	EXT. (+) INT. (-)	EXT. (+) INT. (-)
32"	96"	75.0	100.0
36"		75.0	100.0
39"		75.0	100.0
42"		75.0	100.0
32"	102"	75.0	100.0
36"		75.0	100.0
39"		75.0	100.0
42"		75.0	100.0
32"	108"	75.0	100.0
36"		75.0	100.0
39"		75.0	100.0
42"		75.0	100.0

DOUBLE ENTRANCE DOORS W/O TRANSOM			
DESIGN LOAD CAPACITY - PSF			
NOMINAL DIMS.		LOCK STILES UN-REINFORCED	LOCK STILES REINFORCED
DOOR OPNG. WIDTH	DOOR OPNG. HEIGHT	EXT. (+) INT. (-)	EXT. (+) INT. (-)
64"	96"	75.0	100.0
72"		75.0	100.0
78"		75.0	100.0
84"		75.0	100.0
64"	102"	75.0	100.0
72"		75.0	100.0
78"		75.0	100.0
84"		75.0	100.0
64"	108"	75.0	100.0
72"		70.0	100.0
78"		70.0	100.0
84"		70.0	100.0

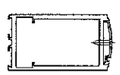

LOCK STILE
UN-REINFORCED

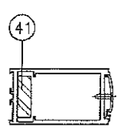

LOCK STILE
REINFORCED

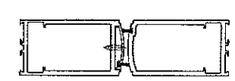

LOCK STILES
UN-REINFORCED

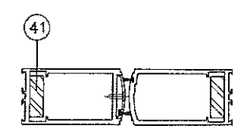

LOCK STILES
REINFORCED

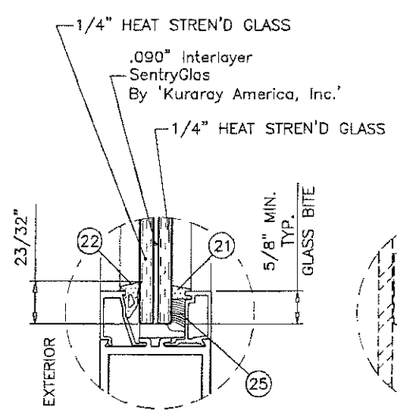

GLAZING DETAIL
AT DOOR LEAF

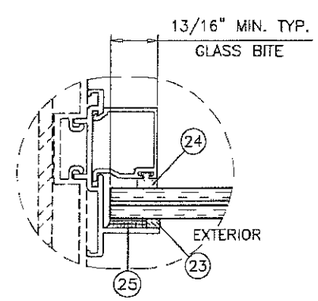

GLAZING DETAIL
AT TRANSOM

FRAME HEIGHT = LEAF HEIGHT + 2.50"
FRAME WIDTH (X DOORS) = SINGLE LEAF WIDTH + 2.250" (NARROW JAMBS)
FRAME WIDTH (X DOORS) = SINGLE LEAF WIDTH + 3.750" (STD. JAMBS)
FRAME WIDTH (XX DOORS) = DOUBLE LEAF WIDTH + 2.50" (NARROW JAMBS)
FRAME WIDTH (XX DOORS) = DOUBLE LEAF WIDTH + 4.0" (STD. JAMBS)
D.L.O. HEIGHT = LEAF HEIGHT - 14.125"
D.L.O. WIDTH = LEAF WIDTH - 9.125"
DOOR LEAF WIDTH = DOOR OPNG WIDTH - .250"
DOOR LEAF HEIGHT = DOOR OPNG HEIGHT - .500"

PRODUCT REVISED
as complying with the Florida Building Code
NOA-No. 15-0915.03
Expiration Date 04/26/2017
By
Miami-Dade Product Control

JUN 2 1 2016

JAVAD AHMAD
LICENSE
No. 70592
STATE OF FLORIDA
PROFESSIONAL ENGINEER

AL-FAROOQ CORPORATION
ENGINEERS & PRODUCT DEVELOPMENT
9360 SUNSET DRIVE, SUITE 220
MIAMI, FLORIDA 33173 (C.A.N. 3538)
TEL. (305) 264-8100 FAX. (305) 262-6978

COMP-ANL\W06-81DD

Series 'DH-350' Aluminum In-Swing Door (L.M.I.)

US Aluminum
Division Of C.R. Laurence Co., Inc.
7500 N.W. 69TH AVE.
MIAMI, FL 33166
TEL. (305) 888-0077 FAX. (305) 884-3111

revisions:

no	date	by	description
C	05.09.12		GENERAL REVISION
D	08.08.12		REV. PER PERA COMMENTS
E	08.19.15		UPDATED TO 2014 FBC
F	04.04.16		NO CHANGE THIS SHEET

date: 11-22-06
scale: 3/8" = 1"
dr. by: TARIQ
chk. by:

drawing no.
W06-81

sheet 3 of 10

SINGLE ENTRANCE DOORS WITH TRANSOM

DESIGN LOAD CAPACITY – PSF

NOMINAL DIMS.			LOCK STILE UN-REINFORCED	LOCK STILE REINFORCED
DOOR OPG. WIDTH INCHES	DOOR OPG. HEIGHT INCHES	TRANSOM HEIGHT INCHES	EXT. (+) INT. (–)	EXT. (+) INT. (–)
36	80	12	75.0	100.0
		18	75.0	100.0
		24	75.0	100.0
		30	75.0	100.0
		36	75.0	100.0
39		12	75.0	100.0
		18	75.0	100.0
		24	75.0	100.0
		30	75.0	100.0
		36	75.0	100.0
42		12	75.0	100.0
		18	75.0	100.0
		24	75.0	100.0
		30	75.0	100.0
		35–3/4	75.0	100.0
36	84	12	75.0	100.0
		18	75.0	100.0
		24	75.0	100.0
		30	75.0	100.0
		36	75.0	100.0
39		12	75.0	100.0
		18	75.0	100.0
		24	75.0	100.0
		30	75.0	100.0
		36	75.0	100.0
42		12	75.0	100.0
		18	75.0	100.0
		24	75.0	100.0
		30	75.0	100.0
		35–3/4	75.0	100.0
36	90	12	75.0	100.0
		18	75.0	100.0
		24	75.0	100.0
		30	75.0	100.0
39		12	75.0	100.0
		18	75.0	100.0
		24	75.0	100.0
		30	75.0	100.0
42		12	75.0	100.0
		18	75.0	100.0
		24	75.0	100.0
		30	75.0	100.0

SINGLE ENTRANCE DOORS WITH TRANSOM

DESIGN LOAD CAPACITY – PSF

NOMINAL DIMS.			LOCK STILE UN-REINFORCED	LOCK STILE REINFORCED
DOOR OPG. WIDTH INCHES	DOOR OPG. HEIGHT INCHES	TRANSOM HEIGHT INCHES	EXT. (+) INT. (–)	EXT. (+) INT. (–)
36	96	12	75.0	100.0
		18	75.0	100.0
		24	75.0	100.0
39		12	75.0	100.0
		18	75.0	100.0
		24	75.0	100.0
42		12	75.0	100.0
		18	75.0	100.0
		24	75.0	100.0
36	102	12	75.0	100.0
		18	75.0	100.0
39		12	75.0	100.0
		18	75.0	100.0
42		12	75.0	100.0
		18	75.0	100.0
36	108	12	75.0	100.0
39		12	75.0	100.0
42		12	75.0	100.0

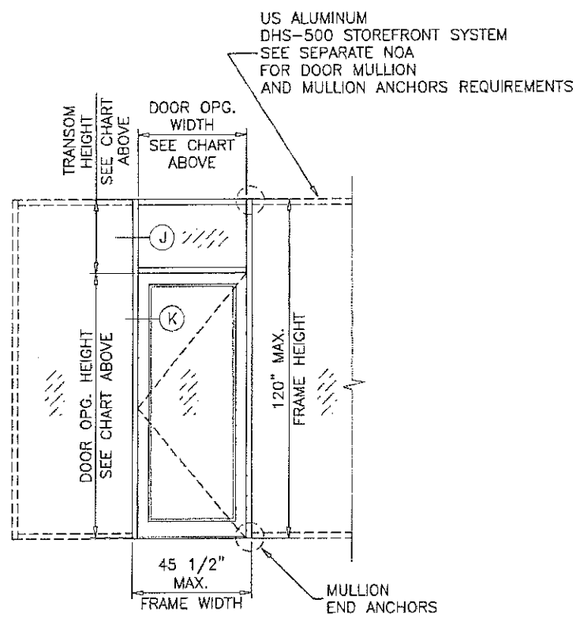

(O/X)

DOUBLE ENTRANCE DOORS WITH TRANSOM

DESIGN LOAD CAPACITY – PSF

NOMINAL DIMS.			LOCK STILE UN-REINFORCED	LOCK STILE REINFORCED
DOOR OPG. WIDTH INCHES	DOOR OPG. HEIGHT INCHES	TRANSOM HEIGHT INCHES	EXT. (+) INT. (–)	EXT. (+) INT. (–)
72	80	12	75.0	100.0
		18	75.0	100.0
		24	75.0	100.0
		30	75.0	100.0
		36	75.0	100.0
78		12	75.0	100.0
		18	75.0	100.0
		24	75.0	99.5
		30	75.0	92.0
		36	75.0	85.3
84		12	75.0	100.0
		18	75.0	92.1
		24	75.0	84.6
		30	75.0	77.9
		35–3/4	73.6	72.0
72	84	12	75.0	100.0
		18	75.0	100.0
		24	75.0	100.0
		30	75.0	100.0
		36	75.0	98.8
78		12	75.0	100.0
		18	75.0	100.0
		24	75.0	95.8
		30	75.0	88.8
		36	75.0	82.5
84		12	75.0	96.4
		18	75.0	88.5
		24	75.0	81.5
		30	75.0	75.2
		35–3/4	69.6	69.6
72	90	12	75.0	100.0
		18	75.0	100.0
		24	75.0	100.0
		30	75.0	100.0
78		12	75.0	105.9
		18	75.0	97.9
		24	75.0	90.8
		30	75.0	84.4
84		12	75.0	90.7
		18	75.0	83.6
		24	75.0	77.2
		30	71.4	71.4

DOUBLE ENTRANCE DOORS WITH TRANSOM

DESIGN LOAD CAPACITY – PSF

NOMINAL DIMS.			LOCK STILE UN-REINFORCED	LOCK STILE REINFORCED
DOOR OPG. WIDTH INCHES	DOOR OPG. HEIGHT INCHES	TRANSOM HEIGHT INCHES	EXT. (+) INT. (–)	EXT. (+) INT. (–)
72	96	12	75.0	100.0
		18	75.0	100.0
		24	75.0	100.0
78		12	75.0	100.0
		18	75.0	92.8
		24	75.0	86.2
84		12	75.0	85.7
		18	75.0	79.2
		24	73.0	73.3
72	102	12	75.0	100.0
		18	75.0	100.0
78		12	75.0	94.7
		18	75.0	88.1
84		12	75.0	81.1
		18	73.9	75.2
72	108	12	70.0	100.0
78		12	70.0	90.0
84		12	70.0	77.1

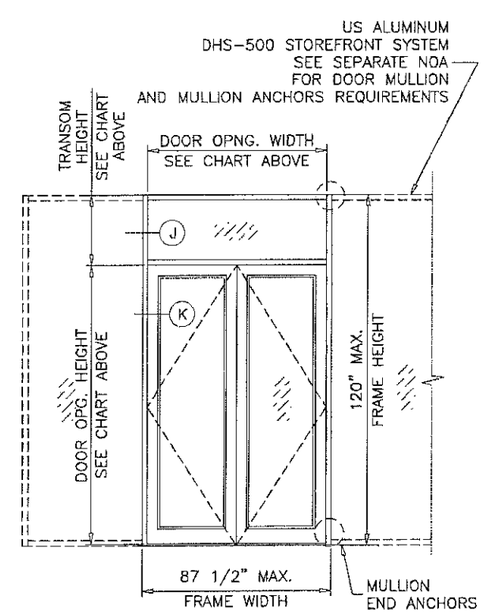

(O/XX)

DOOR LEAF WIDTH = DOOR OPNG WIDTH – .250"
DOOR LEAF HEIGHT = DOOR OPNG HEIGHT – .500"

NOTE:
GLASS CAPACITIES ON THIS SHEET ARE BASED ON ASTM E1300–09 (3 SEC. GUSTS) AND FLORIDA BUILDING COMMISSION DECLARATORY STATEMENT DCA05–DEC–219

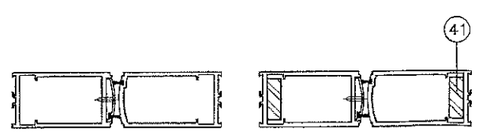

LOCK STILES UN-REINFORCED

LOCK STILES REINFORCED

PRODUCT REVISED
as complying with the Florida Building Code
NOA-No. 15-0915.03
Expiration Date 04/26/2017
By
Miami-Dade Product Control

JUN 2 1 2015

JAVAD AHMAD LICENSE No. 70592 STATE OF FLORIDA PROFESSIONAL ENGINEER

AL-FAROOQ CORPORATION
ENGINEERS & PRODUCT DEVELOPMENT
9360 SUNSET DRIVE, SUITE 220
MIAMI, FLORIDA 33173
(C.A.N. 3538)
TEL. (305) 264-9100 FAX. (305) 262-6978
COMP–ANL\W06–81DD

Series 'DH–350' Aluminum In–Swing Door (L.M.I.)

US Aluminum
Division Of C.R. Laurence Co., Inc.
7500 N.W. 69TH AVE.
MIAMI, FL 33166
TEL. (305) 888–0077 FAX. (305) 884–3111

revisions:

no	date	by	description
C	05.09.12		GENERAL REVISION
D	08.08.12		REV. PER PERA COMMENTS
E	08.19.15		UPDATED TO 2014 FBC
F	04.04.16		NO CHANGE THIS SHEET

date: 11–22–06
scale: –
dr. by: TARIQ
chk. by:

drawing no. W06–81

sheet 4 of 10

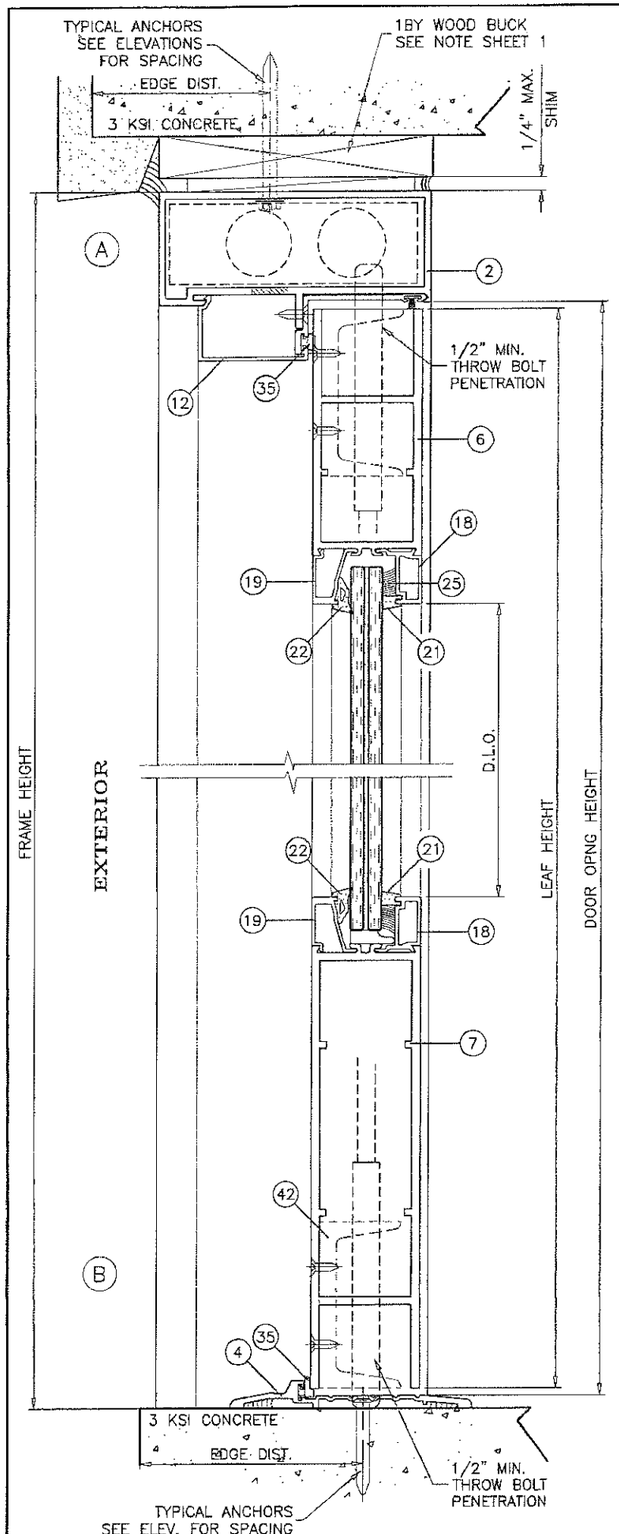

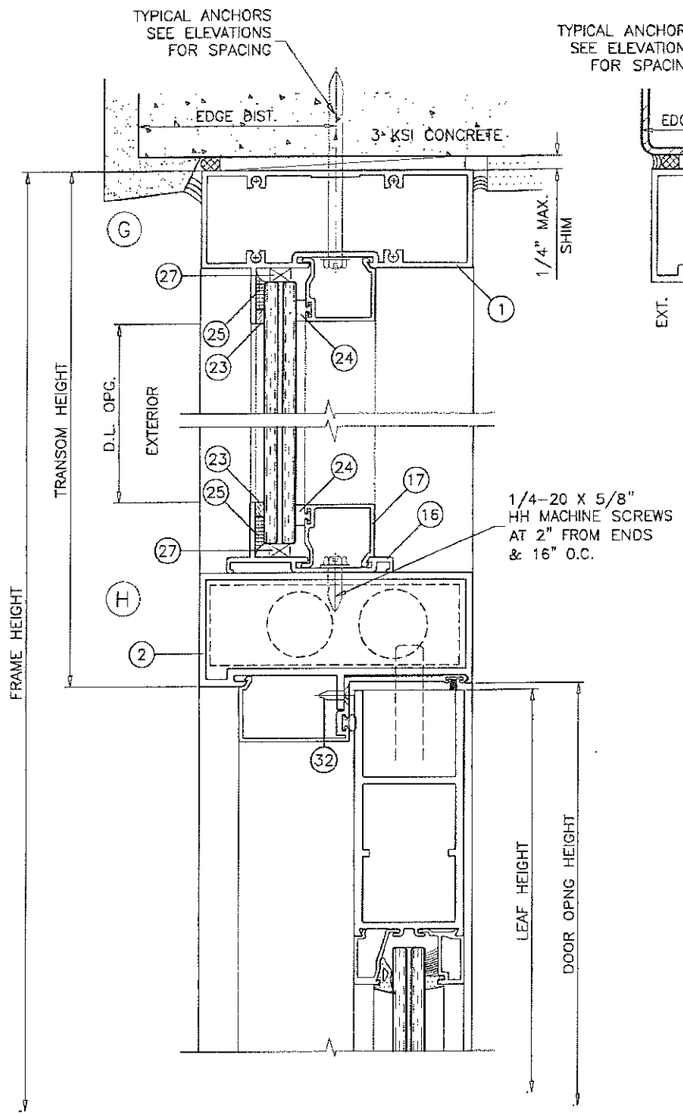

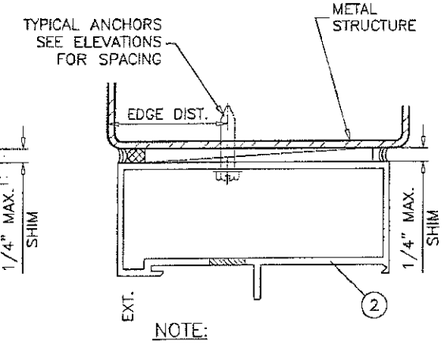

NOTE:

TRANSOM HEAD DETAILS CAN BE INTERCHANGED FOR VARIOUS SUBSTRATES.

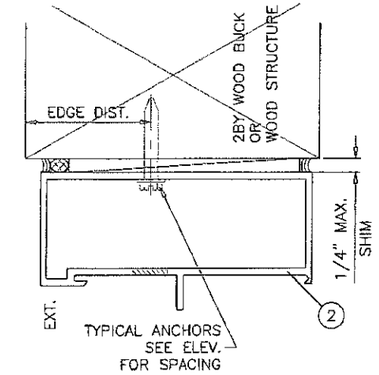

WOOD BUCKS AND METAL STRUCTURES NOT BY US ALUMINUM MUST SUPPORT LOADS IMPOSED BY GLAZING SYSTEM AND TRANSFER THEM TO THE BUILDING STRUCTURE.

TYPICAL ANCHORS: SEE ELEV. FOR SPACING

1/4" DIA. ULTRACON BY 'ELCO' (Fu=177 KSI, Fy=155 KSI)

INTO 2BY WOOD BUCKS OR WOOD STRUCTURES
1-1/2" MIN. PENETRATION INTO WOOD (HEAD/SILL/JAMBS)

THRU 1BY BUCKS INTO CONC. OR MASONRY
1-1/4" MIN. EMBED INTO CONCRETE (HEAD/SILL/JAMBS)
1-1/4" MIN. EMBED INTO MASONRY (JAMBS)

DIRECTLY INTO CONCRETE OR MASONRY
1-1/2" MIN. EMBED INTO CONCRETE (HEAD/SILL/JAMBS)
1-1/4" MIN. EMBED INTO MASONRY (JAMBS)

#14 SMS OR SELF DRILLING SCREWS (GRADE 2 CRS)

INTO MIAMI-DADE COUNTY APPROVED MULLIONS
OR
INTO METAL STRUCTURES (HEAD/SILL/JAMBS)
ALUMINUM: 1/8" THK. MIN. (6063-T5 MIN.)
STEEL: 1/8" THK. MIN. (Fy = 36 KSI MIN.)
(STEEL IN CONTACT WITH ALUMINUM TO BE PLATED OR PAINTED)

TYPICAL EDGE DISTANCE

INTO CONCRETE AND MASONRY = 2-1/2" MIN.
INTO WOOD STRUCTURE = 1" MIN.
INTO METAL STRUCTURE = 3/4" MIN.

WOOD AT HEAD OR JAMBS SG = 0.55 MIN.
CONCRETE AT HEAD, SILL OR JAMBS f'c = 3000 PSI MIN.
C-90 HOLLOW/FILLED BLOCK AT JAMBS f'm = 2000 PSI MIN.

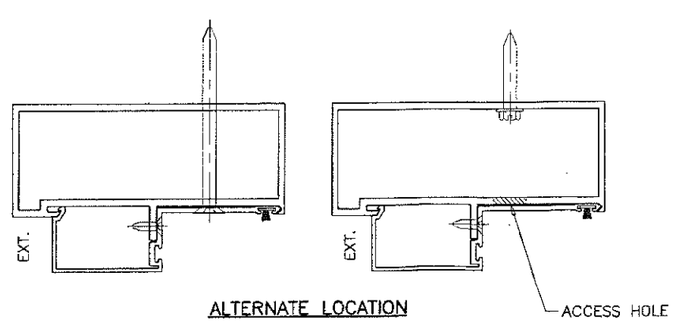

ALTERNATE LOCATION FOR TYPICAL ANCHORS

PRODUCT REVISED
as complying with the Florida Building Code
NOA-No. 15-0915.03
Expiration Date 04/26/2017
By
Miami-Dade Product Control

JUN 2 1 20

JAWAD AHMAD LICENSE No. 70592 STATE OF FLORIDA PROFESSIONAL ENGINEER

AL-FAROOQ CORPORATION
ENGINEERS & PRODUCT DEVELOPMENT
9360 SUNSET DRIVE, SUITE 220
MIAMI, FLORIDA 33173 (C.A.N. 3598)
TEL. (305) 264-8100 FAX. (305) 262-6978
COMP-ANL\W06-81DD

Series 'DH-350' Aluminum In-Swing Door (L.M.)

US Aluminum
Division Of C.R. Laurence Co., Inc.
7500 N.W. 69TH AVE.
MIAMI, FL 33166
TEL. (305) 888-0077 FAX. (305) 884-3111

revisions:

no	date	by	description
C	05.09.12		GENERAL REVISION
D	08.08.12		REV. PER PERA COMMENTS
E	08.19.15		UPDATED TO 2014 FBC
F	04.04.16		REV. PER RER COMMENTS

date: 11-22-06
scale: 3/8" = 1"
dr. by: TARIQ
chk. by:

drawing no. W06-81

sheet 5 of 10

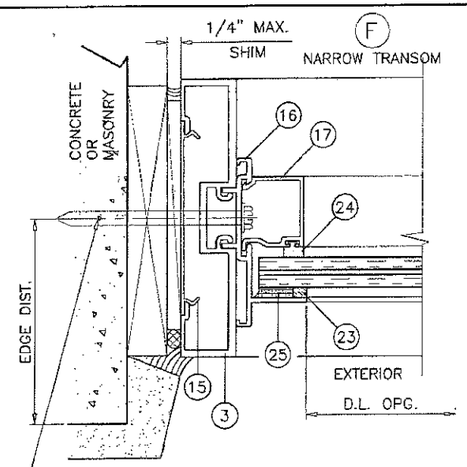

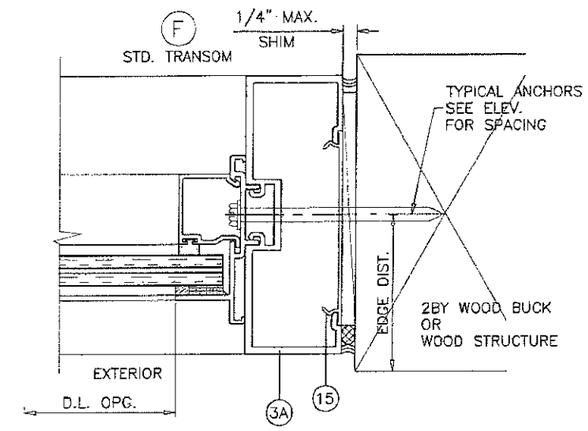

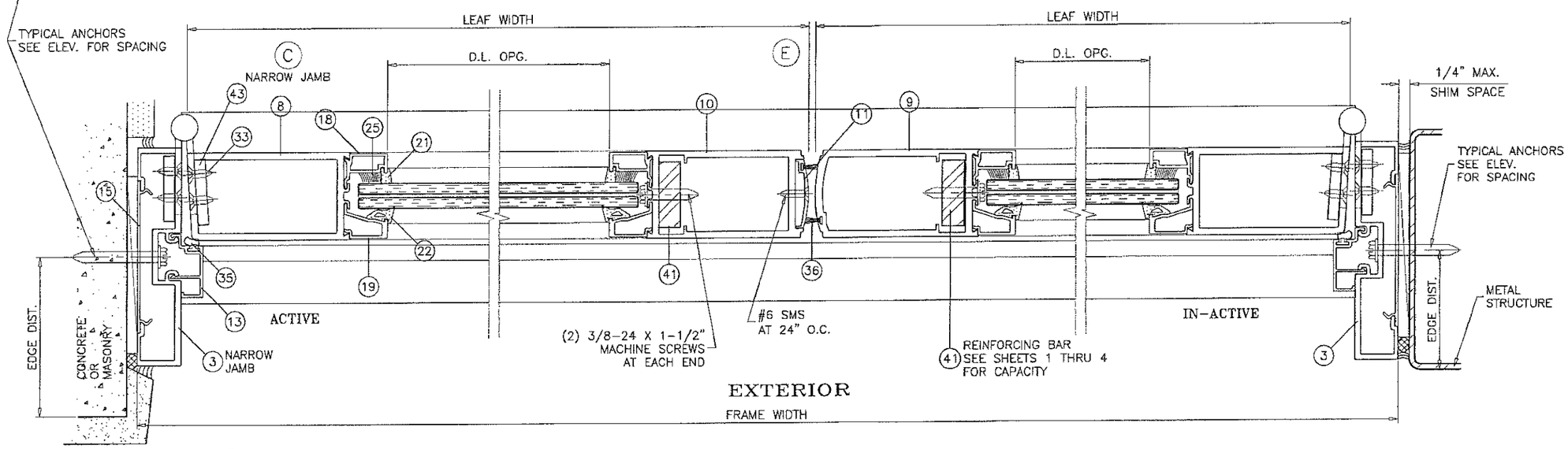

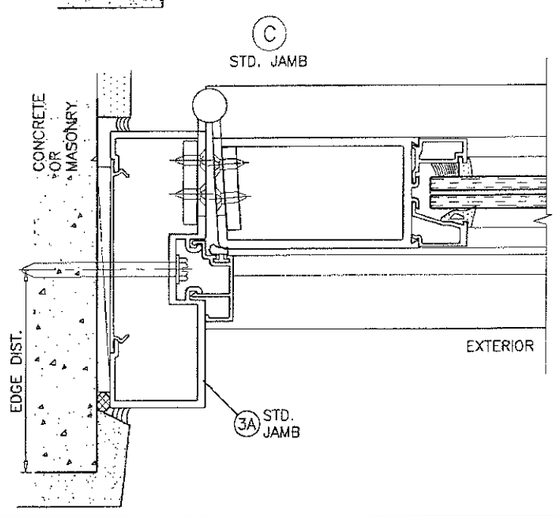

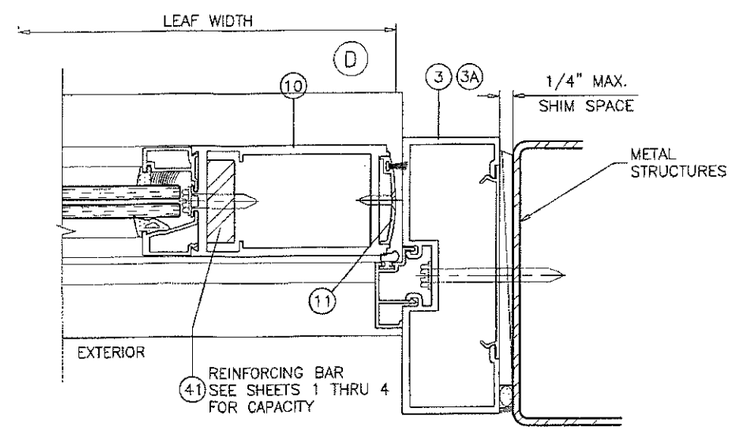

PRODUCT REVISED
as complying with the Florida Building Code
NOA-No. 15-0915.03
Expiration Date 04/26/2017
By
Miami-Dade Product Control

JAVAD AHMAD
LICENSE
No. 70592
STATE OF FLORIDA
PROFESSIONAL ENGINEER

JUN 2 1 2016

AL-FAROOQ CORPORATION
ENGINEERS & PRODUCT DEVELOPMENT
9360 SUNSET DRIVE, SUITE 220
MIAMI, FLORIDA 33173 (C.A.N. 3538)
TEL. (305) 264-8100 FAX. (305) 262-6978

COMP-ANL\W06-81DD

Series 'DH-350' Aluminum In-Swing Door (I.M.I.)

US Aluminum
Division Of C.R. Laurence Co., Inc.
7500 N.W. 69TH AVE.
MIAMI, FL 33166
TEL. (305) 888-0077 FAX. (305) 884-3111

revisions:

no.	date	by	description
C	05.09.12		GENERAL REVISION
D	08.08.12		REV. PER PERA COMMENTS
E	08.19.15		NO CHANGE THIS SHEET
F	04.04.16		NO CHANGE THIS SHEET

date: 11-22-06
scale: 3/8" = 1"
dr. by: TARIQ
chk. by:

drawing no.
W06-81

sheet 6 of 10

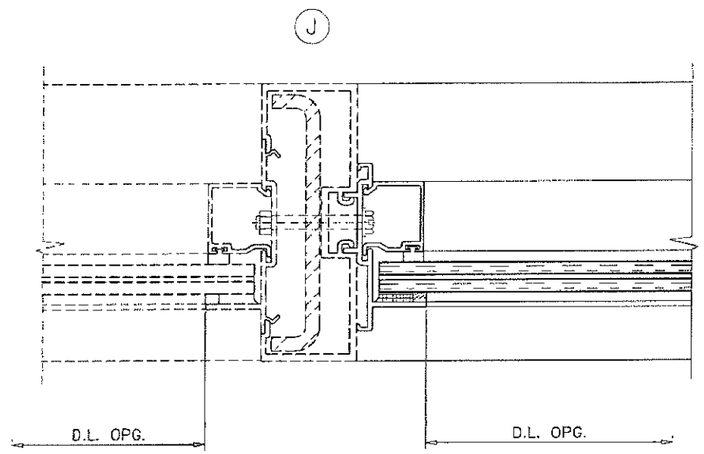

MIAMI-DADE COUNTY APPROVED
DHS-500 STOREFRONT SYSTEM BY 'US ALUMINUM'
UNDER SEPARATE APPROVAL.

LOWER VALUES FROM DOOR CAPACITY CHARTS OR
STOREFRONT NOA WILL APPLY TO ENTIRE SYSTEM.

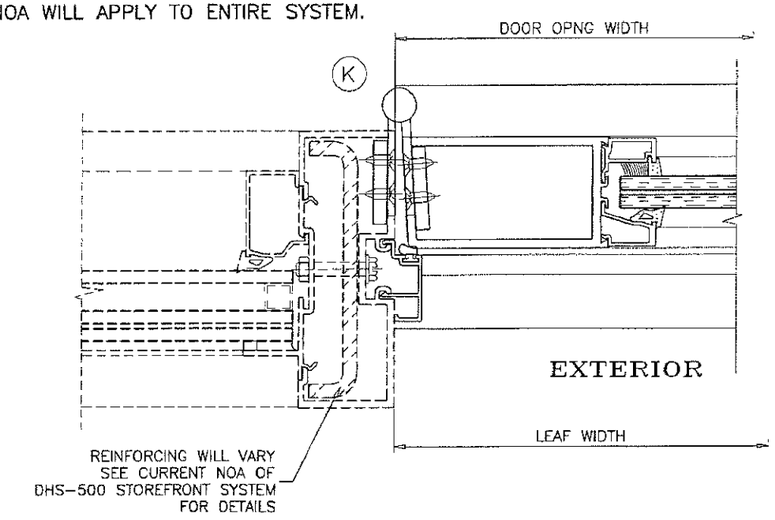

PRODUCT REVISED
as complying with the Florida Building Code
NOA-No. 15-0915.03
Expiration Date 04/26/2017
By
Miami-Dade Product Control

JUN 2 1 2015

JAWAD AHMAD
LICENSE
No. 70592
STATE OF FLORIDA
PROFESSIONAL ENGINEER

AL-FAROOQ CORPORATION
ENGINEERS & PRODUCT DEVELOPMENT
9360 SUNSET DRIVE, SUITE 220
MIAMI, FLORIDA 33173 (C.A.N. 3538)
TEL. (305) 264-8100 FAX. (305) 262-6978
COMP-ANL\W06-81DD

Series 'DH-350' Aluminum In-Swing Door (L.M.I.)

US Aluminum
Division Of C.R. Laurence Co., Inc.
7500 N.W. 69TH AVE.
MIAMI, FL 33166
TEL. (305) 888-0077 FAX. (305) 884-3111

revisions:

no	date	by	description
D	08.08.12		REV. PER PERA COMMENTS
E	08.19.15		NO CHANGE THIS SHEET
F	04.04.16		NO CHANGE THIS SHEET

date: 11-22-06
scale: 3/8" = 1"
dr. by: TARIQ
chk. by:

drawing no.
W06-81

sheet 7 of 10

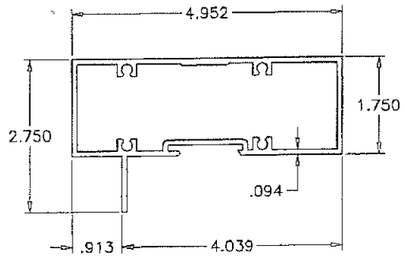

(1) TRANSOM HEAD

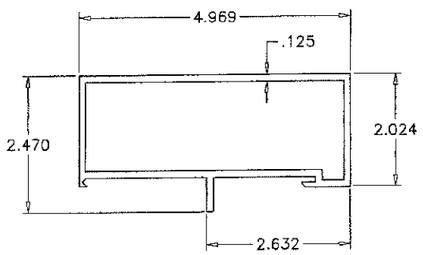

(2) DOOR FRAME HEAD
OPTIONAL TRANSOM HEAD

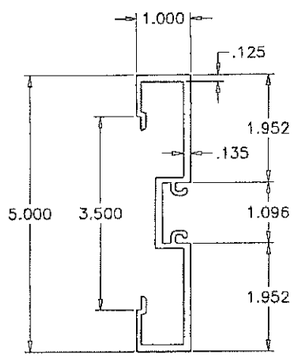

(3) NARROW JAMB

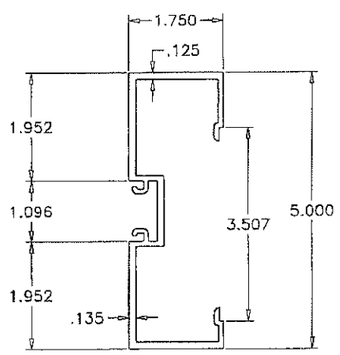

(3A) STD. JAMB

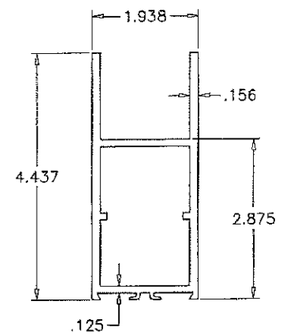

(6) TOP RAIL

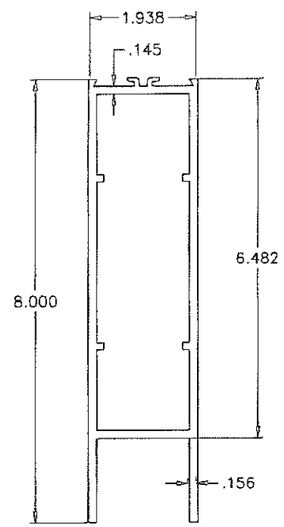

(7) BOTTOM RAIL

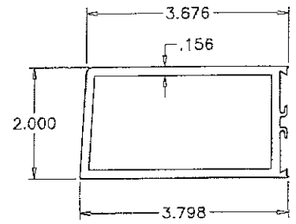

(8) HINGE STILE

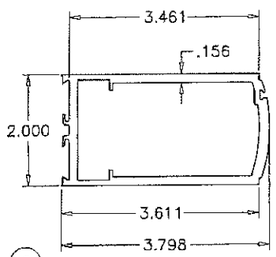

(9) LOCK STILE (IN-ACTIVE)

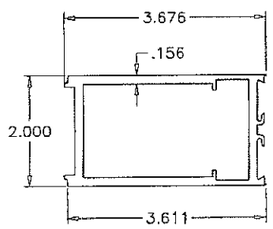

(10) LOCK STILE (ACTIVE)

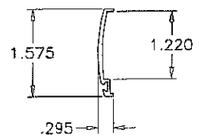

(11) LOCK STILE CAP

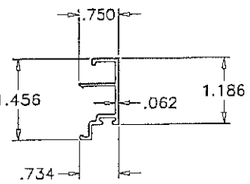

(13) DOOR STOP (JAMB)

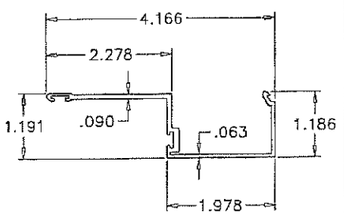

(12) DOOR STOP (HEAD)

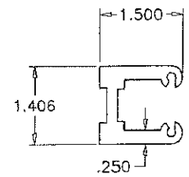

(39) SHEAR BLOCK

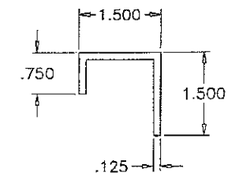

(38) SHEAR CLIP

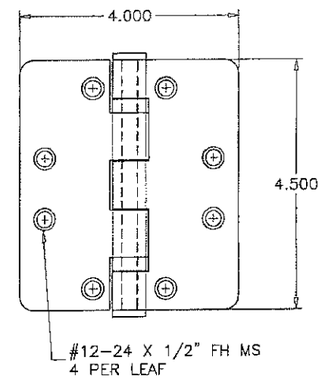

STEEL HINGES
(.130" MIN. THK.)
HAGGER
REGENT
C.R. LAURENCE

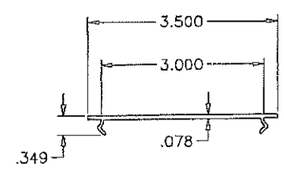

(15) FLAT FILLER

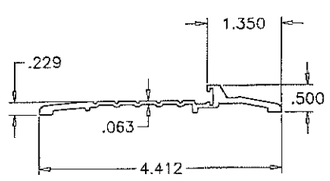

(4) BUMPER THRESHOLD

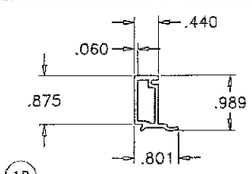

(18) EXTERIOR GLASS STOP (DOOR)

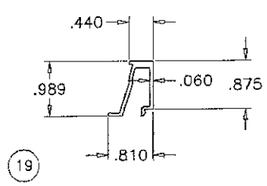

(19) INTERIOR GLASS STOP (DOOR)

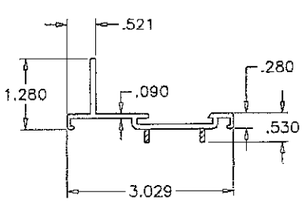

(16) GLAZING ADAPTER

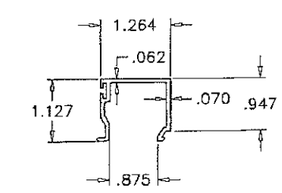

(17) INTERIOR GLASS STOP (TRANSOM)

PRODUCT REVISED
as complying with the Florida Building Code
NOA-No. 15-0915.03
Expiration Date 04/26/2017
By
Miami-Dade Product Control

JUN 2 1 2016

JAWAD AHMAD
LICENSE
No. 70592
STATE OF FLORIDA
PROFESSIONAL ENGINEER

AL-FAROOQ CORPORATION
ENGINEERS & PRODUCT DEVELOPMENT
9360 SUNSET DRIVE, SUITE 220
MIAMI, FLORIDA 33173 (C.A.N. 3538)
TEL. (305) 264-8100 FAX. (305) 262-6978

COMP-ANL\W06-81DD

Series 'DH-350' Aluminum In-Swing Door (L.M.I.)

US Aluminum
Division Of C.R. Laurence Co., Inc.
7500 N.W. 69TH AVE.
MIAMI, FL 33166
TEL. (305) 888-0077 FAX. (305) 884-3111

revisions:

no	date	by	description
C	05.09.12		GENERAL REVISION
D	08.08.12		REV. PER PERA COMMENTS
E	08.19.15		NO CHANGE THIS SHEET
F	04.04.16		NO CHANGE THIS SHEET

date: 11-22-06
scale: 3/8" = 1"
dr. by: TARIQ
chk. by:

drawing no.
W06-81

LOCK SINGLE DOORS:

3 POINT LOCK SYSTEM WITH 5 PLY MORTISE HOOK LOCK AND 1/2" DIA. BOLT BY REGENT.
KEY OPERATED ON EXTERIOR AND THUMB TURN OPERATOR ON INTERIOR.
LOCK AT 42" FROM BOTTOM.
THROW BOLTS AT TOP & BOTTOM.

LOCK DOUBLE DOORS:

ACTIVE LEAF:

3 POINT LOCK SYSTEM WITH 5 PLY MORTISE HOOK LOCK AND 1/2" DIA. BOLT BY REGENT.
KEY OPERATED ON EXTERIOR AND THUMB TURN OPERATOR ON INTERIOR.
LOCK AT 42" FROM BOTTOM.
THROW BOLTS AT TOP & BOTTOM.

INACTIVE LEAF

2 POINT LOCK SYSTEM WITH 1/2" DIA. BOLT BY REGENT.
THUMB TURN OPERATOR ON INTERIOR AT 42" FROM BOTTOM.
THROW BOLTS AT TOP & BOTTOM.

HINGES:

4-1/2 X 4" TWO PIECE STEEL BUTT HINGES BY HAGGER, REGENT OR C.R. LAURENCE AT 8" FROM TOP AND BOTTOM AND 31" O.C. MAX.

ITEM #	PART #	REQD.	DESCRIPTION	MATERIAL	MANF./SUPPLIER/REMARKS
1	DLD-103	AS REQD.	TRANSOM HEAD	6063-T6	–
2	DLD-105	1	DOOR FRAME HEAD OR OPTIONAL TRANSOM HEAD	6063-T5	–
3	DLD-119	2/DOOR	NARROW JAMB	6063-T6	–
3A	DLD-124	2/DOOR	STANDARD JAMB	6063-T6	–
4	DLD-111	1	FRAME SILL	6063-T5	–
6	DLD-107	1/ LEAF	TOP RAIL	6063-T5	–
7	DLD-110	1/ LEAF	BOTTOM RAIL	6063-T5	–
8	DLD-114	1/ LEAF	HINGE STILE	6063-T5	–
9	DLD-115	1/ LEAF	LOCK STILE (IN-ACTIVE)	6063-T5	–
10	DLD-116	1/ LEAF	LOCK STILE (ACTIVE)	6063-T5	–
11	DLD-117	1	CAP AT LOCKED STILE	6063-T5	–
12	DLD-106	1	DOOR STOP AT HEAD	6063-T5	–
13	BCE-460	2/ DOOR	DOOR STOP AT JAMB	6063-T5	–
15	BCE-475	AS REQD.	FLAT FILLER, FULL LENGTH	6063-T6	–
16	DLD-125	AS REQD.	GLAZING ADAPTOR	–	–
17	DLD-102	AS REQD.	INTERIOR GLASS STOP TRANSOM	6063-T5	–
18	DLD-108	4/ LEAF	EXTERIOR GLASS STOP DOOR	6063-T5	–
19	DLD-109	4/ LEAF	INTERIOR GLASS STOP DOOR	6063-T5	–
21	–	AS REQD.	INTERIOR GASKET	EPDM	TR-5796W, DUROMETER 70±5
22	–	AS REQD.	EXTERIOR GASKET	EPDM	TR-3235E, DUROMETER 60±5
23	2100	AS REQD.	GLAZING TAPE	–	–
24	GG-75	AS REQD.	INTERIOR SPACER	–	IMPACT SYS.
25	DOW 995	AS REQD.	GLAZING COMPOUND	SILICONE	DOW 995
27	1350	AS REQD.	SETTING BLOCKS AT 1/4 POINTS	EPDM	DUROMETER 80±5 SHORE A
29	#12 X 1-1/4"	AS REQD.	FRAME ASSEMBLY SCREWS	–	P.H. SMS
30	#10 X 1"	AS REQD.	ASSEMBLY SCREWS	–	F.H. SMS
31	#12 X 3/4"	AS REQD.	ASSEMBLY SCREWS	–	MACHINE SCREWS
32	10-24 X 1/2"	4/ LEAF	DOOR STOP SCREWS	–	F.H. MACHINE SCREWS
33	12-24 X 1/2"	4/ HASP	HINGE INSTALLATION SCREWS	–	F.H. MACHINE SCREWS
35	E236	–	BULB WEATHERSTRIPPING POLYPROPILENE BASE, TPE BULB	–	ULTRAFAB BASE DURO 90, BULB DURO 73
36	T4216-K	–	PILE WITH FIN WEATHERSTRIPPING	–	ULTRAFAB
38	–	–	SHEAR CLIP, 4-1/2" LONG	ALUMINUM	–
39	DH-4	–	SHEAR BLOCK	6063-T5	–
40	–	2	3 X 2 X 1/8" ANGLE, 1-3/4" LONG	ALUMINUM	–
41	–	AS REQD.	REINFORCING BAR, FULL LENGTH	STEEL	1-1/2" X 1/2"
42	–	2/ LEAF	FLUSH BOLT GUIDE CHANNEL	ALUMINUM	3" LONG
43	–	2/ HINGE	HINGE REINFORCING PLATES	ALUMINUM	1-1/2" X 1/4" X 8" LONG

SEALANTS:

FRAME CORNERS, ASSEMBLY SCREWS AND HEADS OF ANCHOR SCREWS AT SILL TO BE SEALED WITH SEALER.
LEAF JOINTS SEALED WITH SILICONE.

PRODUCT REVISED
as complying with the Florida Building Code
NOA-No. 15-0915.03
Expiration Date 04/26/2017
By
Miami-Dade Product Control

JAVAD AHMAD
LICENSE
No. 70592
STATE OF FLORIDA
PROFESSIONAL ENGINEER

JUN 21 2016

AL-FAROOQ CORPORATION
ENGINEERS & PRODUCT DEVELOPMENT
9360 SUNSET DRIVE, SUITE 220
MIAMI, FLORIDA 33173 (C.A.N. 3538)
TEL. (305) 264-8100 FAX. (305) 262-6978

COMP-ANL\W06-81DD

Series 'DH-350' Aluminum In-Swing Door (L.M.I.)

US Aluminum
Division Of C.R. Laurence Co., Inc.
7500 N.W. 69TH AVE.
MIAMI, FL 33166
TEL. (305) 888-0077 FAX. (305) 884-3111

revisions:

no	date	by	description
C	05.09.12		GENERAL REVISION
D	08.08.12		REV. PER PERA COMMENTS
E	08.19.15		UPDATED TO 2014 FBC
F	04.04.16		REV. PER RER COMMENTS

date: 11-22-06
scale: 3/8" = 1"
dr. by: TARIQ
chk. by:

drawing no.
W06-81

sheet 9 of 10

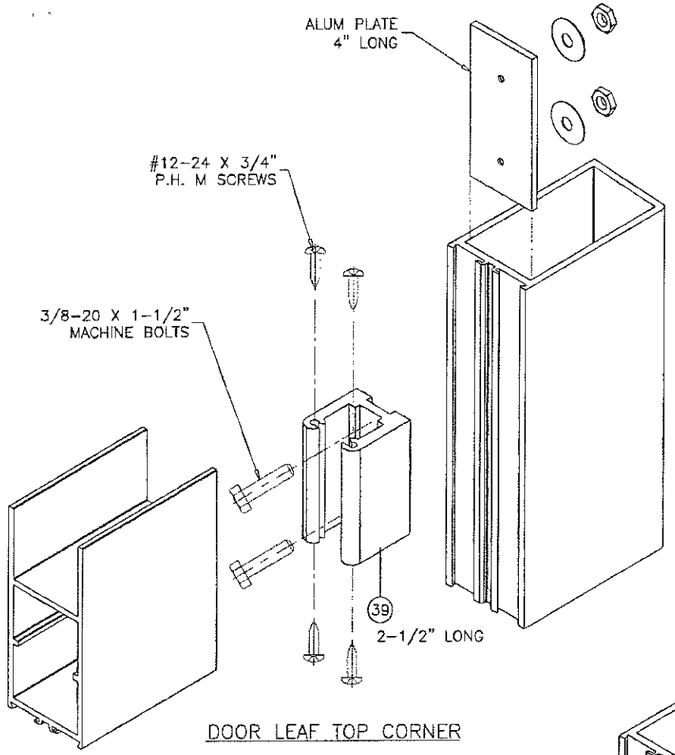

DOOR LEAF TOP CORNER

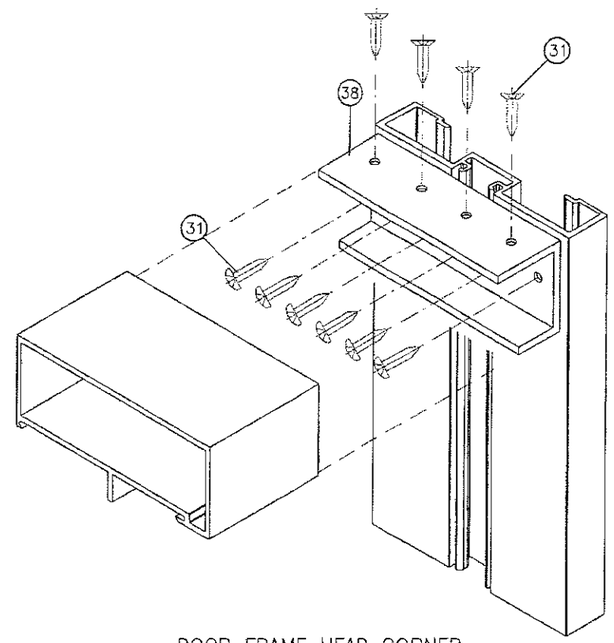

DOOR FRAME HEAD CORNER

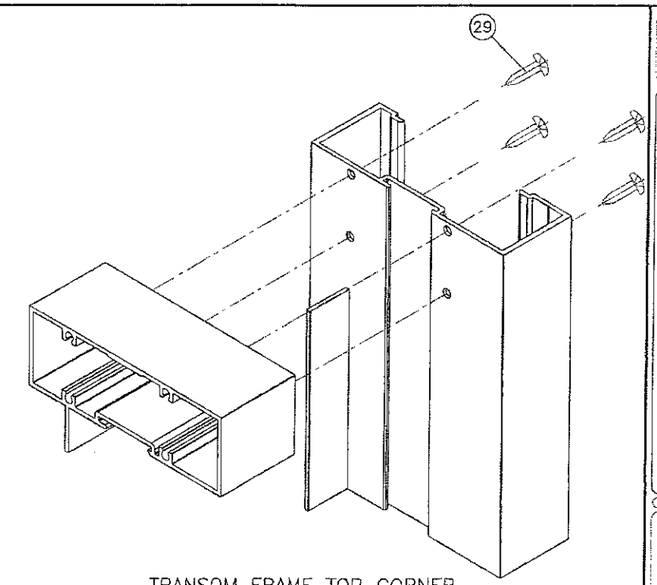

TRANSOM FRAME TOP CORNER

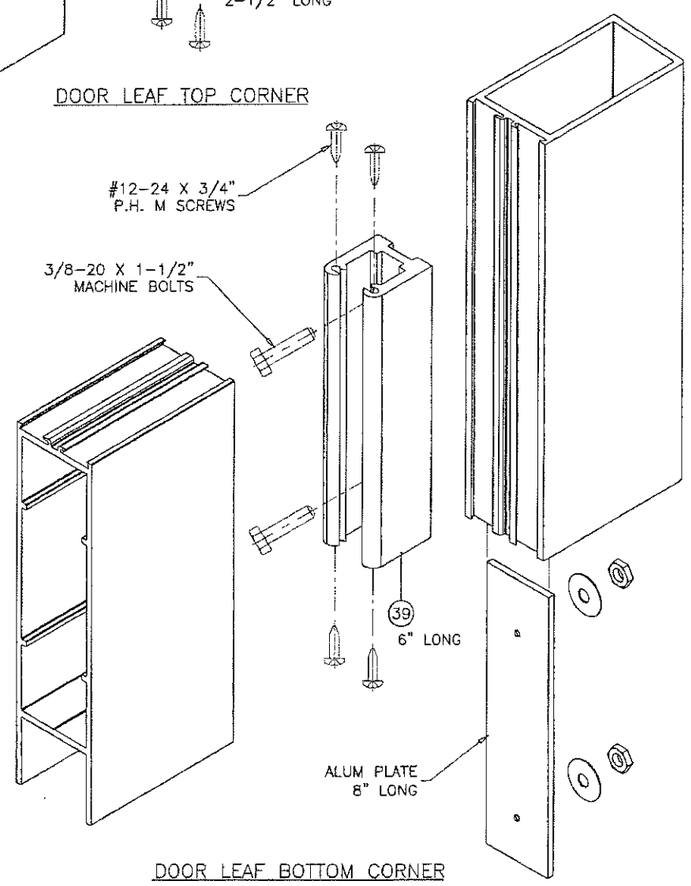

DOOR LEAF BOTTOM CORNER

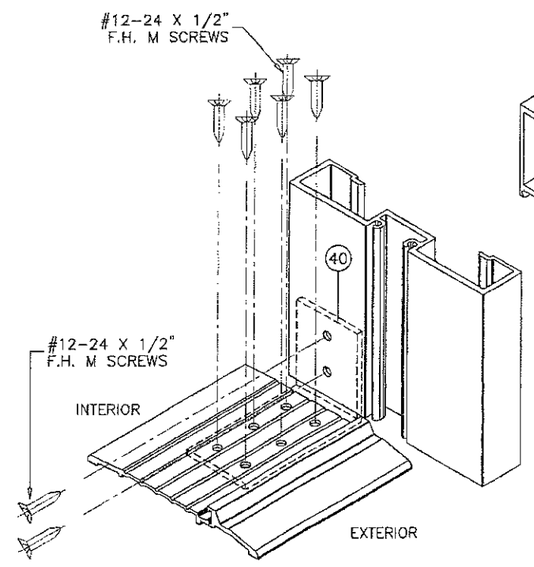

FRAME BOTTOM CORNER

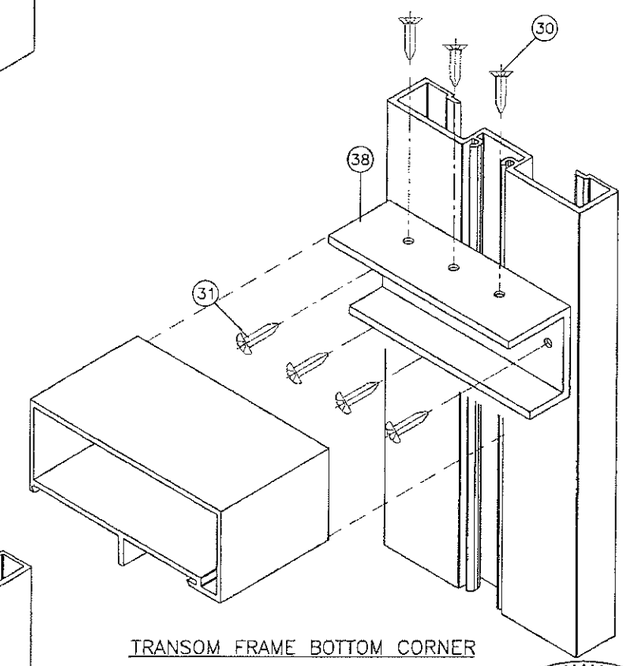

TRANSOM FRAME BOTTOM CORNER

PRODUCT REVISED
as complying with the Florida Building Code
NOA-No. 15-0915.03
Expiration Date 04/26/2017
By
Miami-Dade Product Control

JUN 21 2016

JAVAD AHMAD
LICENSE
No. 70592
STATE OF FLORIDA
PROFESSIONAL ENGINEER

AL-FAROOQ CORPORATION
ENGINEERS & PRODUCT DEVELOPMENT
9360 SUNSET DRIVE, SUITE 220
MIAMI, FLORIDA 33173 (C.A.N. 3558)
TEL. (305) 264-8100 FAX. (305) 262-6978

COMP-ANL\W06-81DD

Series 'DH-350' Aluminum In-Swing Door (L.M.I.)

US Aluminum
Division Of C.R. Laurence Co., Inc.
7500 N.W. 69TH AVE.
MIAMI, FL 33166
TEL. (305) 888-0077 FAX. (305) 884-3111

revisions:

no	date	by	description
C	05.09.12		NO CHANGE THIS SHEET
D	08.08.12		REV. PER PERA COMMENTS
E	08.19.15		UPDATED TO 2014 FBC
F	04.04.16		NO CHANGE THIS SHEET

date: 11-22-06
scale: 3/8" = 1"
dr. by: TARIQ
chk. by:

drawing no.
W06-81

sheet 10 of 10