MIAMI-DADE COUNTY
DEPARTMENT OF REGULATORY AND ECONOMIC RESOURCES (RER)
BOARD AND CODE ADMINISTRATION DIVISION

MIAMI-DADE COUNTY
PRODUCT CONTROL SECTION
11805 SW 26 Street, Room 208
T (786) 315-2590 F (786) 315-2599
www.miamidade.gov/economy

NOTICE OF ACCEPTANCE (NOA)

U. S. Aluminum (FL),
Division of C. R. Laurence Company.
7500 NW 69th Ave
Miami, FL 33166

SCOPE:

This NOA is being issued under the applicable rules and regulations governing the use of construction materials. The documentation submitted has been reviewed and accepted by Miami-Dade County RER -Product Control Section to be used in Miami Dade County and other areas where allowed by the Authority Having Jurisdiction (AHJ).

This NOA shall not be valid after the expiration date stated below. The Miami-Dade County Product Control Section (In Miami Dade County) and/or the AHJ (in areas other than Miami Dade County) reserve the right to have this product or material tested for quality assurance purposes. If this product or material fails to perform in the accepted manner, the manufacturer will incur the expense of such testing and the AHJ may immediately revoke, modify, or suspend the use of such product or material within their jurisdiction. RER reserves the right to revoke this acceptance, if it is determined by Miami-Dade County Product Control Section that this product or material fails to meet the requirements of the applicable building code.

This product is approved as described herein, and has been designed to comply with the Florida Building Code, including the High Velocity Hurricane Zone.

DESCRIPTION: Series "DMS-35" Outswing Aluminum Entrance Door w/wo Transom -NI

APPROVAL DOCUMENT: Drawing N0. **W11-07 Rev C,** titled "Series **DMS-35** Alum Out-swing Entrance Door (NI)", sheets 1 through 8 of 8, prepared by Al-Farooq Corporation, dated 02-24-11 and last revised on SEP 08, 2016, signed and sealed by Javad Ahmad, P.E., bearing the Miami-Dade County Product Control revision stamp with the Notice of Acceptance number and expiration date by the Miami-Dade County Product Control Section.

MISSILE IMPACT RATING: None: Approved Hurricane Protection Device complying w/ FBC is required.

Limitations:

1. See Single or Double Doors Design Pressure (DP) in sheet **1.** See sheet **2** for Design Pressure capacity w/ Transom bar (Horizontal mullion). When single or double doors w/ Transom (O/X or O/XX) used, the lower DP shall control for the entire unit.
2. Door w/wo Transom can be mulled with US Aluminum "DSF-450" Storefront System (under separate NOA), the lower DP shall control from Door, Door w/Transom or the Storefront for the entire assembly. The tributary mullion load, anchors and installation to be reviewed by Building Official.

LABELING: Each unit shall bear a permanent label with the manufacturer's name or logo, city, state, model/series, and following statement: "Miami-Dade County Product Control Approved", unless otherwise noted herein.

RENEWAL of this NOA shall be considered after a renewal application has been filed and there has been no change in the applicable building code negatively affecting the performance of this product.

TERMINATION of this NOA will occur after the expiration date or if there has been a revision or change in the materials, use, and/or manufacture of the product or process. Misuse of this NOA as an endorsement of any product, for sales, advertising or any other purposes shall automatically terminate this NOA. Failure to comply with any section of this NOA shall be cause for termination and removal of NOA.

ADVERTISEMENT: The NOA number preceded by the words Miami-Dade County, Florida, and followed by the expiration date may be displayed in advertising literature. If any portion of the NOA is displayed, then it shall be done in its entirety.

INSPECTION: A copy of this entire NOA shall be provided to the user by the manufacturer or its distributors and shall be available for inspection at the job site at the request of the Building Official.

This NOA **renews & revises NOA #11-0415.02** and consists of this page 1 and evidence pages E-1, as well as approval document mentioned above.

The submitted documentation was reviewed by **Ishaq I. Chanda, P.E.**

MIAMI-DADE COUNTY APPROVED

NOA No. 15-0915.06
Expiration Date: October 13, 2017
Approval Date: September 15, 2016

919116

NOTICE OF ACCEPTANCE: EVIDENCE SUBMITTED

A. DRAWINGS

1. Manufacturer's die drawings and sections (submitted under file reference below).
2. Drawing N0. **W11-07 Rev C,** titled "Series **DMS-35**Alum Out-swing Entrance Door (NI)", sheets 1 through 8 of 8, prepared by Al-Farooq Corporation, dated 02-24-11 and last revised on SEP 07, 2016, signed and sealed by Javad Ahmad, P.E.

B. TESTS (submitted under file #**11-0415.02**)

1. Test reports on: 1) Air Infiltration Test, per FBC, TAS 202-94
   2) Uniform Static Air Pressure Test, Loading per FBC TAS 202-94
   3) Water Resistance Test, per FBC, TAS 202-94
   4) Large Missile Impact Test per FBC, TAS 201-94
   5) Cyclic Wind Pressure Loading per FBC, TAS 203-94
   6) Forced Entry Test, per FBC 2411 3.2.1, TAS 202-94

Along with marked-up drawings and installation diagram of aluminum outswing entrance doors, prepared by Fenestration Testing Laboratory, Inc., Test Reports No. Test Reports No. **FTL-4242,** dated 08/18/04, signed and sealed by Edmundo Largaespada, P. E.

Along with marked-up drawings and installation diagram of aluminum outswing entrance doors, prepared by Hurricane Engineering & Testing, Inc., Test Reports No.(s) **HETI-03-1325,** dated 03/17/04, signed and sealed by Rafael E. Droz-Seda, P. E.

C. CALCULATIONS

1. Anchor verification, comparative and structural analysis complying w/ FBC 2014(5th Edition), prepared by AL- Farooq Corporation, dated 08/24/15 and last revised on AUG 01, 2016, signed and sealed by late Javad Ahmad, P.E.
2. Glazing complies w/ ASTME-1300-02, -04 & -09.

D. QUALITY ASSURANCE

1. Miami–Dade Department of Regulatory and Economic Resources (RER).

E. MATERIAL CERTIFICATIONS

1. None.

F. STATEMENTS (Items #4 & #5 submitted under file #**11-0415.02**)

1. Statement letter of conformance to FBC 2014(5th Edition) statement of no financial interest, prepared by Al Farooq Corporation, dated 08/11/15, signed and sealed by Javad Ahmad, P.E.
2. Press Release dated August 25, 2011, issued by C. R. Laurence Company, Inc. of announcement of C. R. Laurance (CRL) and U. S. Aluminum Company (USAL) on the integration of Delta Doors with U.S. Aluminum, Florida.
3. Press Release dated 07/08/11, issued by C. R. Laurence Company, Inc. (CRL) announcing the Acquisition of U.S. Aluminum Company (USAL)Asset purchase agreement between CRL Impact Doors, Inc. and Vidco Industries, Inc., dated December 17, 2010, signed by Mr. Lloyd W. Talbert and Mr. Jesus Martinez, respectively.
4. Asset purchase agreement between CRL Impact Doors, Inc. and Vidco Industries, Inc., dated December 17, 2010, signed by Mr. Lloyd W. Talbert and Mr. Jesus Martinez, respectively
5. Delta Doors fictitious name listing by owner Vidco Industries Inc, w/ FL Dept. of State (Sunbitz).
6. Statement letter of Lab compliance, as a part of above referenced test reports

G. OTHER

1. This NOA **renews & revises NOA #11-0415.02**, conditionally for one year expiring OCT 13, 2017.
2. Test proposals #**15-1955** approved by RER & #**02-0472** dated 06/11/03, approved by BCCO.

Ishaq I. Chanda, P.E.
Product Control Examiner
NOA No. 15-0915.06
Expiration Date: October 13, 2017
Approval Date: September 15, 2016

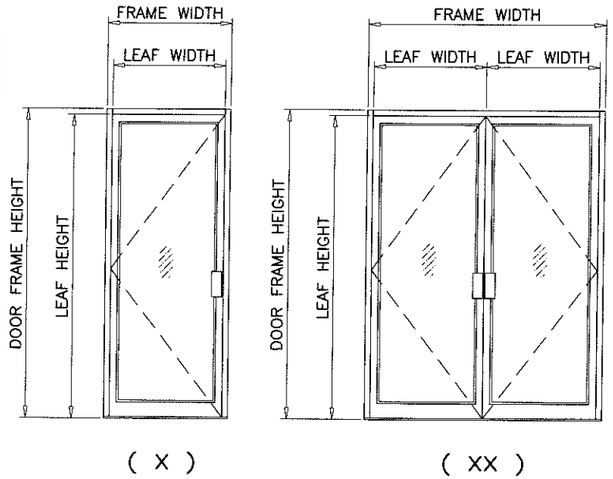

DESIGN LOAD CAPACITY – PSF SINGLE OR DOUBLE ENTRANCE DOORS W/O TRANSOM						
NOMINAL DIMS.					LOADS – PSF	
FRAME WIDTH (X)	FRAME WIDTH (XX)	FRAME HEIGHT INCHES	LEAF WIDTH INCHES	LEAF HEIGHT INCHES	EXT.(+)	INT.(–)
33–1/2"	63–1/2"	85–1/2	29–3/4	83	82.3	82.3
39–1/2"	75–1/2"		35–3/4		68.6	68.6
33–1/2"	63–1/2"	97–1/2	29–3/4	95	72.0	72.0
39–1/2"	75–1/2"		35–3/4		60.0	60.0

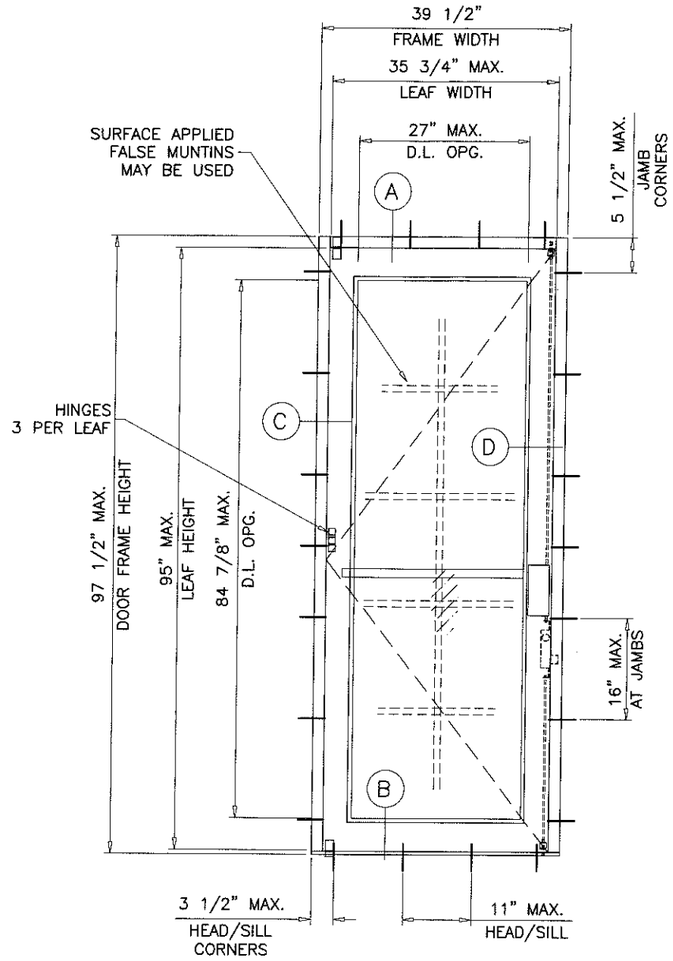

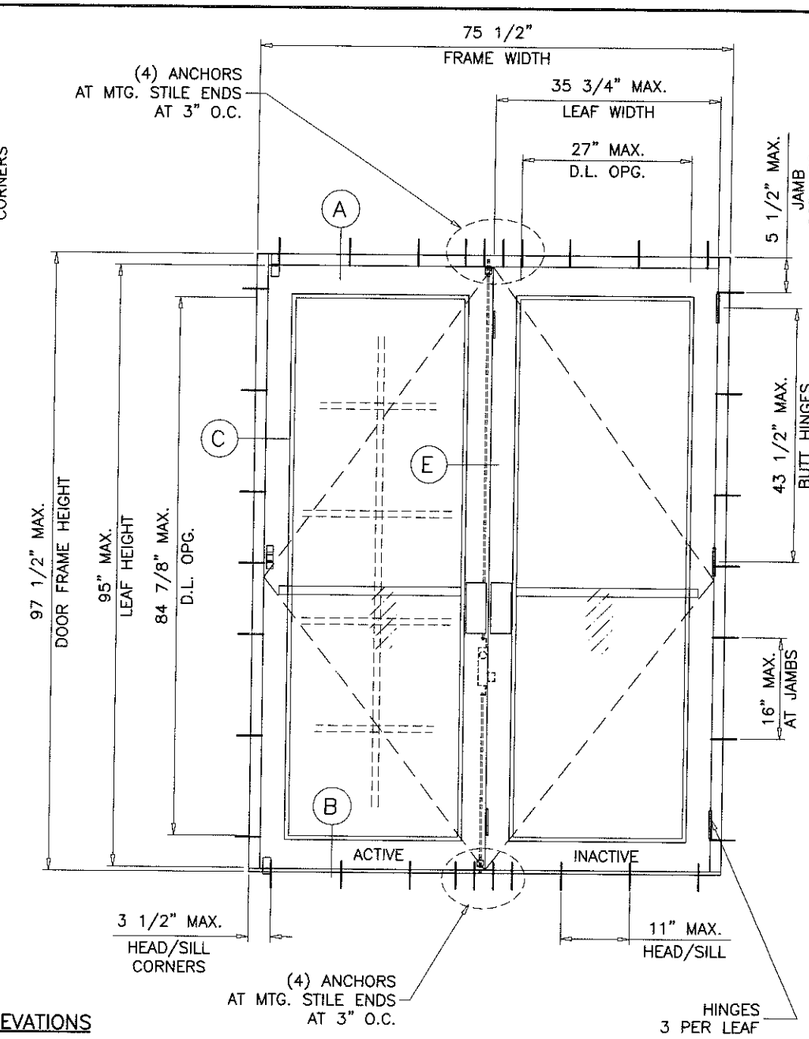

TYPICAL ELEVATIONS

NOTE:
GLASS CAPACITIES ON THIS SHEET ARE BASED ON ASTM E1300–09 (3 SEC. GUSTS) AND FLORIDA BUILDING COMMISSION DECLARATORY STATEMENT DCA05–DEC–219

GLASS D.L.O. DIMS.

D.L.O. HEIGHT = DOOR FRAME HEIGHT – 10.625"
D.L.O. WIDTH (X DOORS) = FRAME WIDTH – 12.50"
D.L.O. WIDTH (XX DOORS) = (FRAME WIDTH – 21.50")/2

DOORS NOT RATED FOR IMPACT.
INSTALLATION OF THIS PRODUCT IN THE HVHZ AREA REQUIRES THE USE OF APPROVED SHUTTERS OR EXTERNAL PROTECTION DEVICES COMPLYING WITH HVHZ REQUIREMENTS.
INSTALLATION OF THIS SYSTEM OUTSIDE THE HVHZ AREA SHALL MEET THE APPLICABLE REQUIREMENTS FOR WIND BORNE DEBRIS PROTECTION.

MONOLITHIC GLASS
NON–IMPACT

DMS–35 ALUMINUM OUT–SWING ENTRANCE DOOR

SINGLE (X) AND DOUBLE (XX) LEAF DOORS W/O TRANSOM SEE CHART ABOVE FOR DESIGN LOAD CAPACITY.

FOR HORIZONTAL MULLION (TRANSOM BAR) SEE HORIZONTAL MULLION LOAD CAPACITY CHARTS ON SHEET 2.
LOWER VALUE RESULTING FROM DOOR CAPACITY CHART OR HORIZONTAL MULLION CAPACITY CHARTS WILL APPLY FOR DOORS WITH TRANSOM (O/X OR O/XX).

DOORS CAN ALSO BE USED WITH 'DSF–450' US ALUMINUM STOREFRONT SYSTEM.
FOR OUTSWING DOORS WITH STOREFRONT SYSTEM SEE SEPARATE NOA FOR DOOR MULLION CAPACITY AND ANCHORING REQUIREMENTS. THE LOWEST VALUE RESULTING FROM DOOR CAPACITY CHARTS OR STOREFRONT NOA WILL APPLY TO ENTIRE SYSTEM.

DOORS NOT APPROVED FOR INSTALLATIONS WHERE WATER INFILTRATION RESISTANCE IS REQUIRED.

THIS PRODUCT HAS BEEN DESIGNED AND TESTED TO COMPLY WITH THE REQUIREMENTS OF THE 2014 (5TH EDITION) FLORIDA BUILDING CODE INCLUDING HIGH VELOCITY HURRICANE ZONE (HVHZ).

1BY OR 2BY WOOD BUCKS BY OTHERS, MUST BE ANCHORED PROPERLY TO TRANSFER LOADS TO THE STRUCTURE.

ANCHORS SHALL BE AS LISTED, SPACED AS SHOWN ON DETAILS, ANCHORS EMBEDMENT TO BASE MATERIAL SHALL BE BEYOND WALL DRESSING OR STUCCO.

ANCHORING OR LOADING CONDITIONS NOT SHOWN IN THESE DETAILS ARE NOT PART OF THIS APPROVAL.

A LOAD DURATION INCREASE IS USED IN DESIGN OF ANCHORS INTO WOOD ONLY.

ALL SHIMS TO BE HIGH IMPACT, NON–METALLIC AND NON–COMPRESSIBLE.

MATERIALS INCLUDING BUT NOT LIMITED TO STEEL/METAL SCREWS, THAT COME INTO CONTACT WITH OTHER DISSIMILAR MATERIALS SHALL MEET THE REQUIREMENTS OF THE 2014 FLORIDA BUILDING CODE & ADOPTED STANDARDS.

PRODUCT REVISED
as complying with the Florida Building Code
Acceptance No. 15-0915-06
Expiration Date OCT 13, 2017
Mic Ali Dade Product Control

SEP 08 2016

JAVAD AHMAD
LICENSE
No. 70582
STATE OF FLORIDA
PROFESSIONAL ENGINEER

AL-FAROOQ CORPORATION
ENGINEERS & PRODUCT DEVELOPMENT
9360 SUNSET DRIVE, SUITE 220
MIAMI, FLORIDA 33173 (C.A.N. 3538)
TEL. (305) 264-8100 FAX. (305) 262-6978

COMP–ANL\W11–07DD

DMS–35 ALUM OUT–SWING ENTRANCE DOOR (N.I.)

US Aluminum
Division Of C.R. Laurence Co., Inc.
7500 N.W. 69TH AVE.
MIAMI, FL 33166
TEL. (305) 888–0077 FAX. (305) 884–3111

revisions:			
no	date	by	description
A	09.06.11		REV. PER BNC COMMENTS
B	08.19.15		UPDATED TO 2014 FBC
C	05.03.16		REV. PER RER COMMENTS

date: 02–24–11
scale: 1/2"=1'–0"
dr. by: TARIQ
chk. by:

drawing no.
W11–07

DESIGN LOAD CAPACITY – PSF SINGLE DOOR HORIZONTAL MULLION (TRANSOM BAR) WITHOUT CLIP			
NOMINAL DIMS.			LOADS – PSF
FRAME WIDTH INCHES	DOOR HEIGHT INCHES	TRANSOM HEIGHT INCHES	EXT. (+) INT. (–)
33–1/2	97–1/2	22–1/2	60.0
		26–1/2	51.4
39–1/2	97–1/2	22–1/2	60.0

DESIGN LOAD CAPACITY – PSF DOUBLE DOOR HORIZONTAL MULLION (TRANSOM BAR) WITH ANGLE REINFORCED CLIP			
NOMINAL DIMS.			LOADS – PSF
FRAME WIDTH INCHES	DOOR HEIGHT INCHES	TRANSOM HEIGHT INCHES	EXT. (+) INT. (–)
63–1/2	97–1/2	22–1/2	60.0
		26–1/2	51.4
75–1/2	97–1/2	22–1/2	60.0

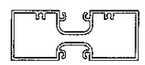

WITHOUT CLIP

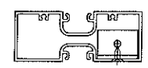

WITH CLIP

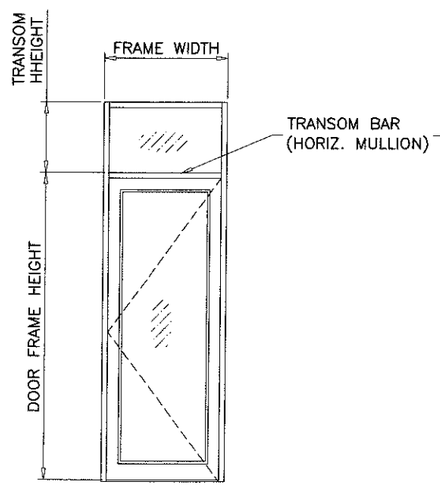

(O/X)

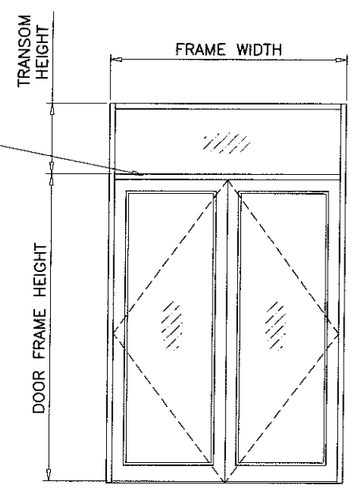

(O/XX)

US ALUMINUM
DSF–450 STOREFRONT SYSTEM
SEE SEPARATE NOA
FOR DOOR MULLION
AND MULLION ANCHORS REQUIREMENTS
TO BE REVIEWED BY AHJ

TRANSOM GLASS D.L.O. DIMS.

D.L.O. HEIGHT = TRANSOM HEIGHT – 1.750"
D.L.O. WIDTH = TRANSOM WIDTH – 3.750"

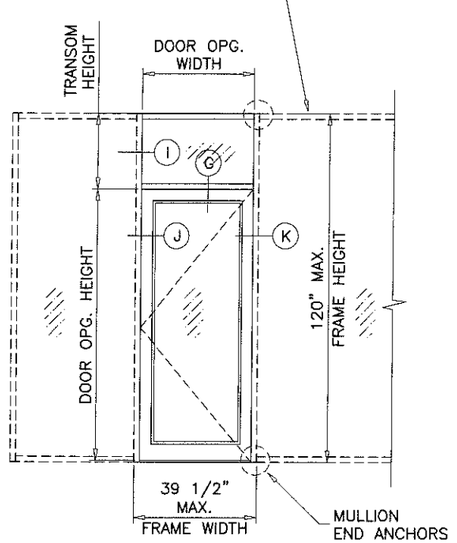

(O/X)

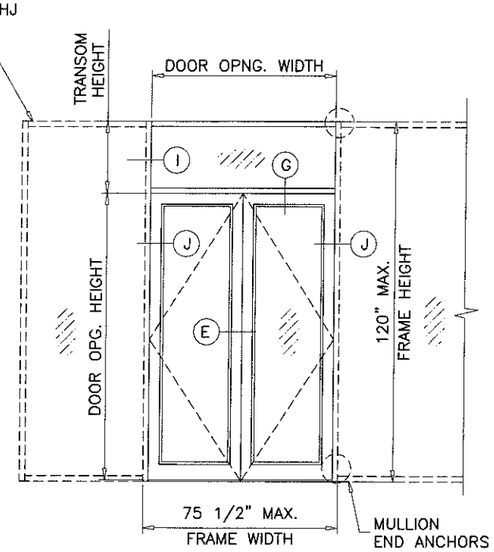

(O/XX)

NOTE:
FOR DOORS CAPACITY SEE SHEET 1.
FOR HORIZONTAL MULLION CAPACITY SEE CHART ABOVE.
LOWER VALUES FROM DOORS OR HORIZONTAL MULLION CHART
WILL APPLY TO ENTIRE SYSTEM.

NOTE:
GLASS CAPACITIES ON THIS SHEET ARE
BASED ON ASTM E1300–09 (3 SEC. GUSTS)
AND FLORIDA BUILDING COMMISSION
DECLARATORY STATEMENT DCA05–DEC–219

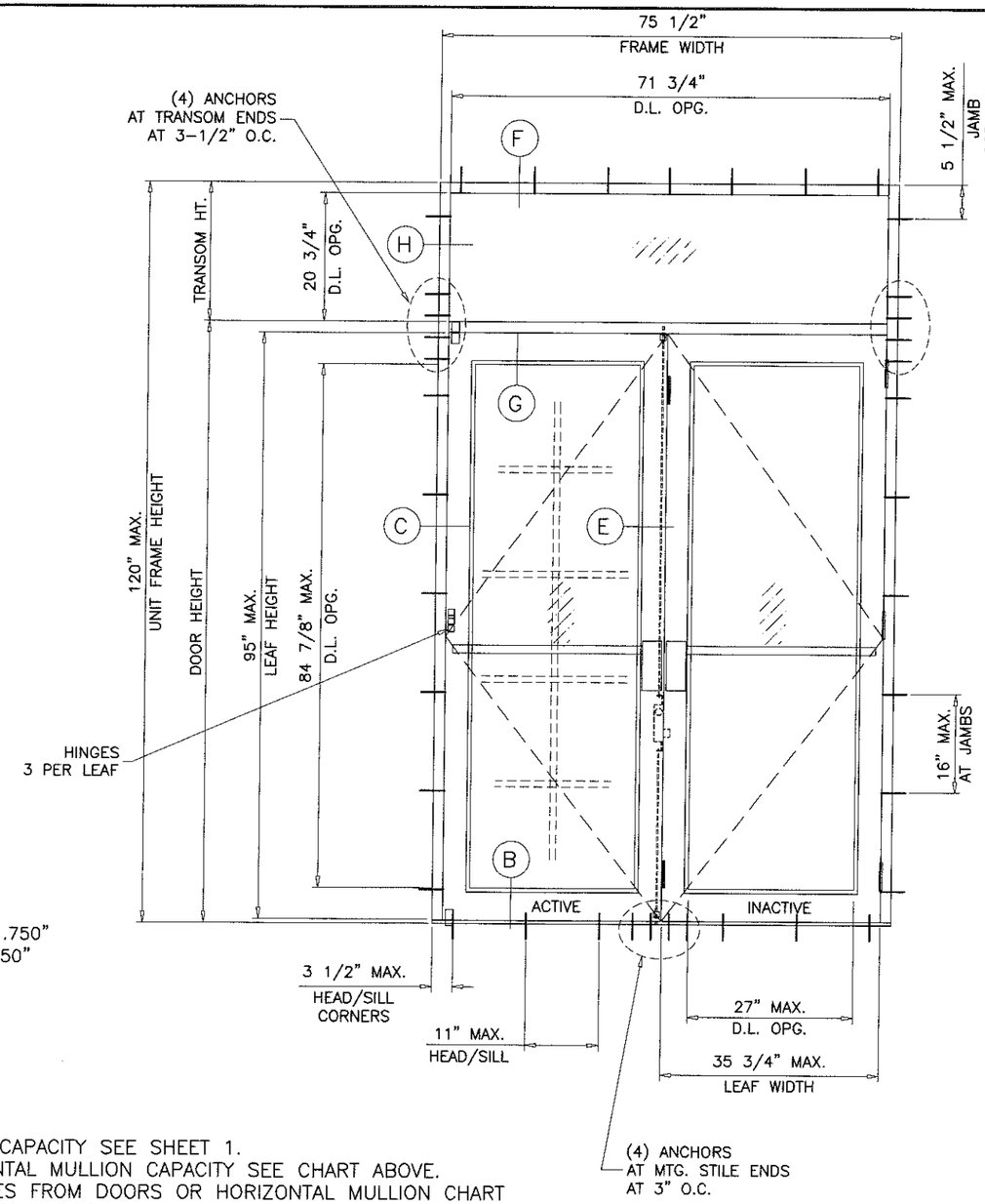

PRODUCT REVISED
as complying with the Florida
Building Code
Acceptance No. 15-0915.06
Expiration Date 10/13/17
B. Ishwar L. Khan
Ma ne' Date Product Control

JAVAD AHMAD
LICENSE
No. 70592
STATE OF FLORIDA
PROFESSIONAL ENGINEER

SEP 08 2016

AL-FAROOQ CORPORATION
ENGINEERS & PRODUCT DEVELOPMENT
9360 SUNSET DRIVE, SUITE 220
MIAMI, FLORIDA 33173
TEL. (305) 264-8100 FAX. (305) 262-6978
(C.A.N. 3538)

COMP–ANL\W11–07DD

DMS–35 ALUM OUT–SWING ENTRANCE DOOR (N.I.)

US Aluminum
Division Of C.R. Laurence Co., Inc.
7500 N.W. 69TH AVE.
MIAMI, FL 33166
TEL. (305) 888–0077 FAX. (305) 884–3111

revisions:			
no	date	by	description
A	09.06.11		REV. PER BNC COMMENTS
B	08.19.15		UPDATED TO 2014 FBC
C	05.03.16		REV. PER RER COMMENTS

date: 02–24–11
scale: 1/2"=1'–0"
dr. by: TARIQ
chk. by:

drawing no.
W11–07

sheet 2 of 8

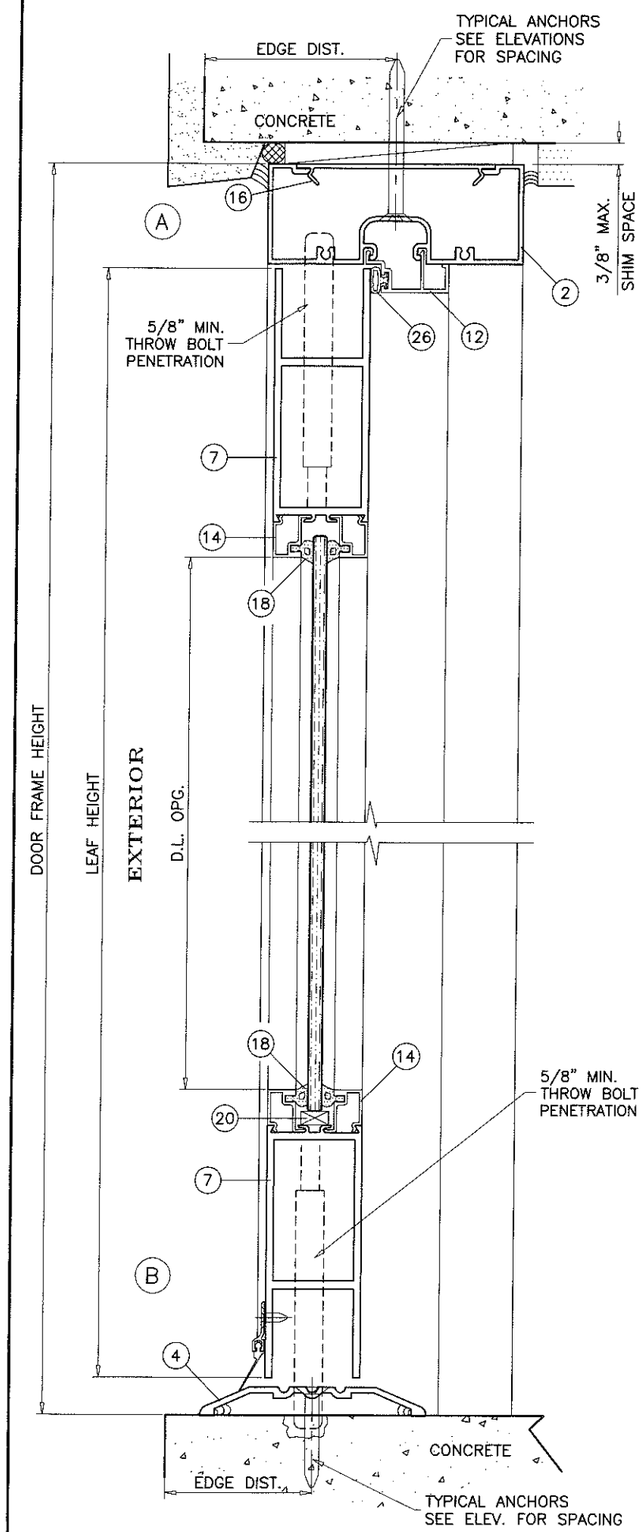

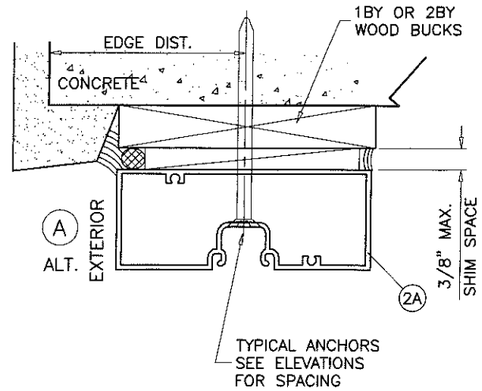

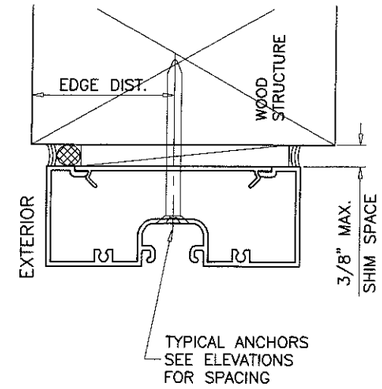

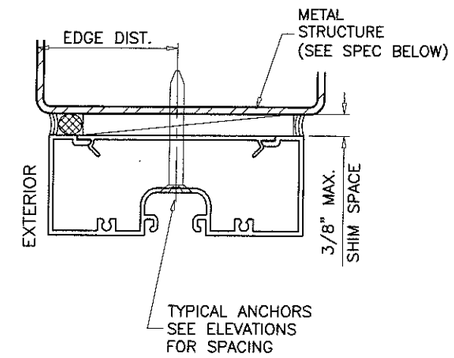

WOOD BUCKS AND METAL STRUCTURE NOT BY US ALUMINUM MUST SUSTAIN LOADS IMPOSED BY GLAZING SYSTEM AND TRANSFER THEM TO THE BUILDING STRUCTURE.

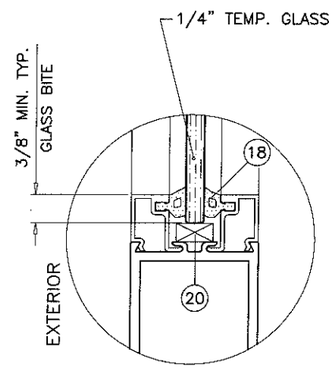

GLAZING DETAIL
DOOR LEAF

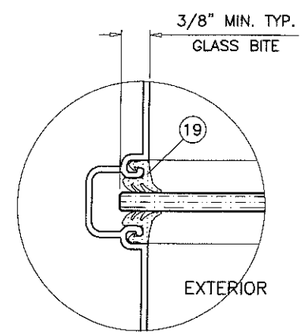

GLAZING DETAIL
FIXED LITE

TYPICAL ANCHORS: SEE ELEV. FOR SPACING

1/4" DIA. ULTRACON BY 'ELCO' (Fu=177 KSI, Fy=155 KSI)

INTO WOOD STRUCTURES
2" MIN. PENETRATION INTO WOOD (HEAD/JAMBS)

THRU 1BY OR 2BY BUCKS INTO CONC. OR MASONRY
1-1/4" MIN. EMBED INTO CONCRETE (HEAD)
1-1/4" MIN. EMBED INTO CONC. OR MASONRY (JAMBS)

DIRECTLY INTO CONC. OR MASONRY
2" MIN. EMBED INTO CONCRETE (HEAD/SILL)
1-1/4" MIN. EMBED INTO CONC. OR MASONRY (JAMBS)

1/4" DIA. TEKS OR SELF DRILLING SCREWS (GRADE 5 CRS)

INTO MIAMI-DADE COUNTY APPROVED MULLIONS (MIN. THK. = 1/8")

INTO METAL STRUCTURES
STEEL : 1/8" THK. MIN. (Fy = 36 KSI MIN.)
ALUMINUM : 1/8" THK. MIN. (6063-T5 MIN.)
(STEEL IN CONTACT WITH ALUMINUM TO BE PLATED OR PAINTED)

TYPICAL EDGE DISTANCE

INTO CONCRETE AND MASONRY = 2-1/2" MIN.
INTO WOOD STRUCTURE = 1" MIN.
INTO METAL STRUCTURE = 3/4" MIN.

WOOD AT HEAD OR JAMBS SG = 0.55 MIN.
CONCRETE AT HEAD, SILL OR JAMBS f'c = 3000 PSI MIN.
C-90 HOLLOW/FILLED BLOCK AT JAMBS f'm = 2000 PSI MIN.

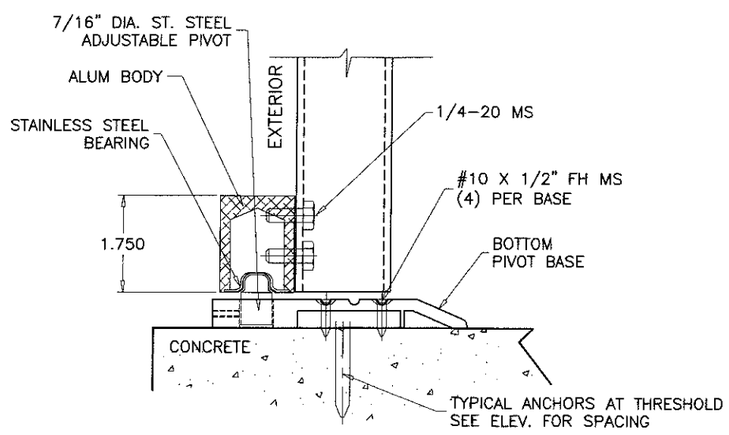

OFFSET PIVOT HINGE AT THRESHOLD

PRODUCT REVISED
as complying with the Florida Building Code
Acceptance No. 15-0915.06
Expiration Date 10/13/17
By [illegible]
Miami Dade Product Control

SEP 08 2015

JAVAD AHMAD
LICENSE
No. 70592
STATE OF FLORIDA
PROFESSIONAL ENGINEER

AL-FAROOQ CORPORATION
ENGINEERS & PRODUCT DEVELOPMENT
9360 SUNSET DRIVE, SUITE 220
MIAMI, FLORIDA 33173
(C.A.N. 3538)
TEL. (305) 264-8100 FAX. (305) 262-6978

COMP-ANL\W11-07DD

DMS-35 ALUM OUT-SWING ENTRANCE DOOR (N.I.)

US Aluminum
Division Of C.R. Laurence Co., Inc.
7500 N.W. 69TH AVE.
MIAMI, FL 33166
TEL. (305) 888-0077 FAX. (305) 884-3111

revisions:			
no	date	by	description
A	09.06.11		REV. PER BNC COMMENTS
B	08.19.15		UPDATED TO 2014 FBC
C	05.03.16		REV. PER RER COMMENTS

date: 02-24-11
scale: 3/8" = 1"
dr. by: TARIQ
chk. by:

drawing no.
W11-07

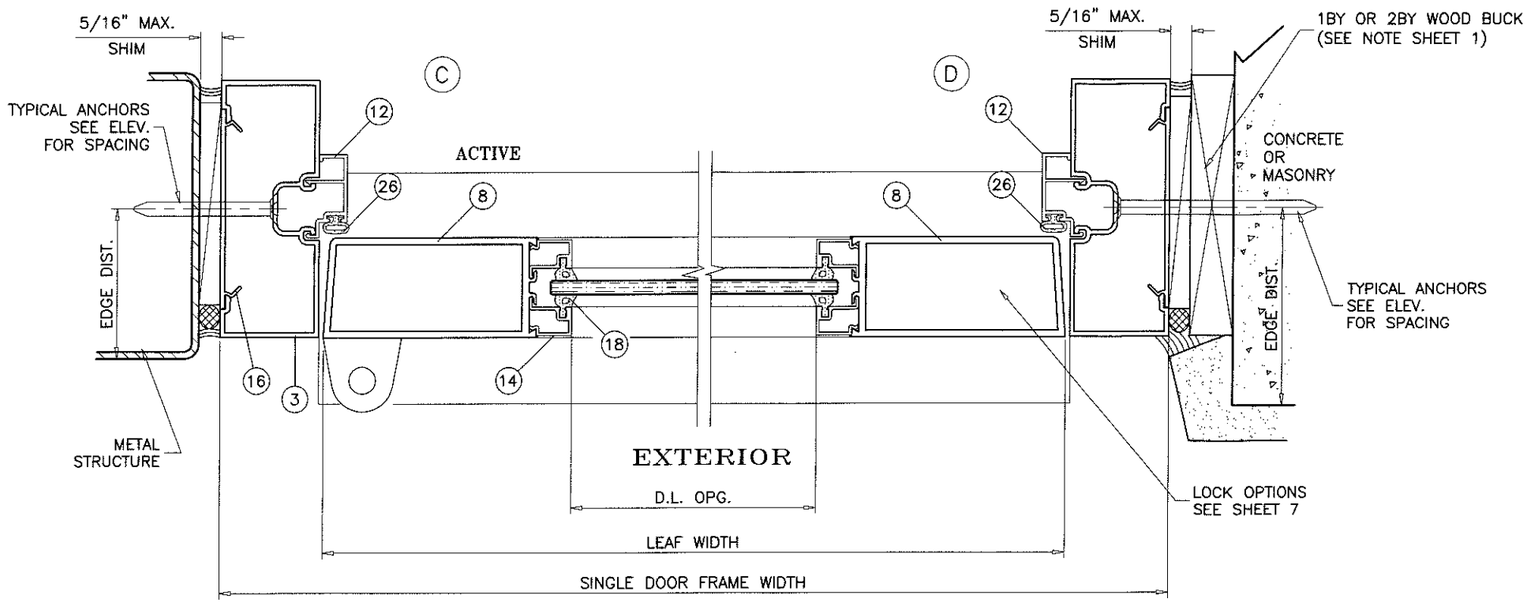

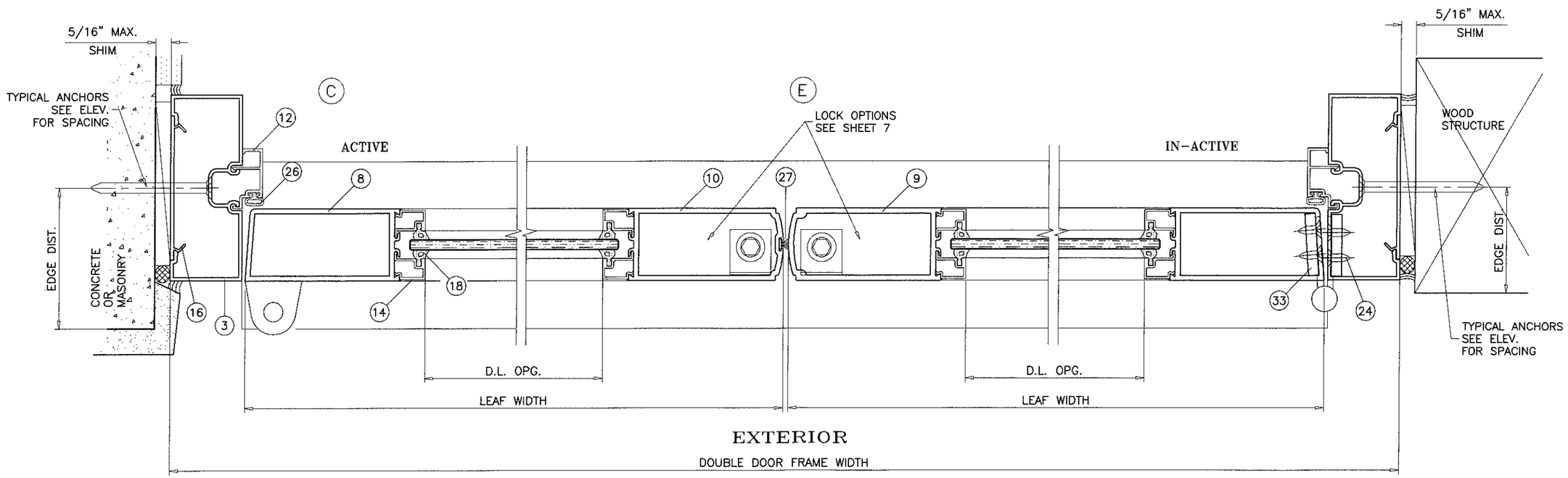

PRODUCT REVISED
as complying with the Florida
Building Code
Acceptance No 15-0915.06
Expiration Date 10/13/17
By [signature]
Miami Dade Product Control

SEP 08 2016

JAVAD AHMAD
LICENSE
No. 70592
STATE OF
FLORIDA
PROFESSIONAL ENGINEER

AL-FAROOQ CORPORATION
ENGINEERS & PRODUCT DEVELOPMENT
9360 SUNSET DRIVE, SUITE 220
MIAMI, FLORIDA 33173 (C.A.N. 3538)
TEL. (305) 264-8100 FAX. (305) 262-6978

COMP-ANL\W11-07DD

DMS-35 ALUM OUT-SWING ENTRANCE DOOR (N.I.)

US Aluminum
Division Of C.R. Laurence Co., Inc.
7500 N.W. 69TH AVE.
MIAMI, FL 33166
TEL. (305) 888-0077 FAX. (305) 884-3111

revisions:

no	date	by	description
A	09.06.11		REV. PER BNC COMMENTS
B	08.19.15		UPDATED TO 2014 FBC
C	05.03.16		REV. PER RER COMMENTS

date: 02-24-11
scale: 3/8" = 1"
dr. by: TARIQ
chk. by:

drawing no.
W11-07

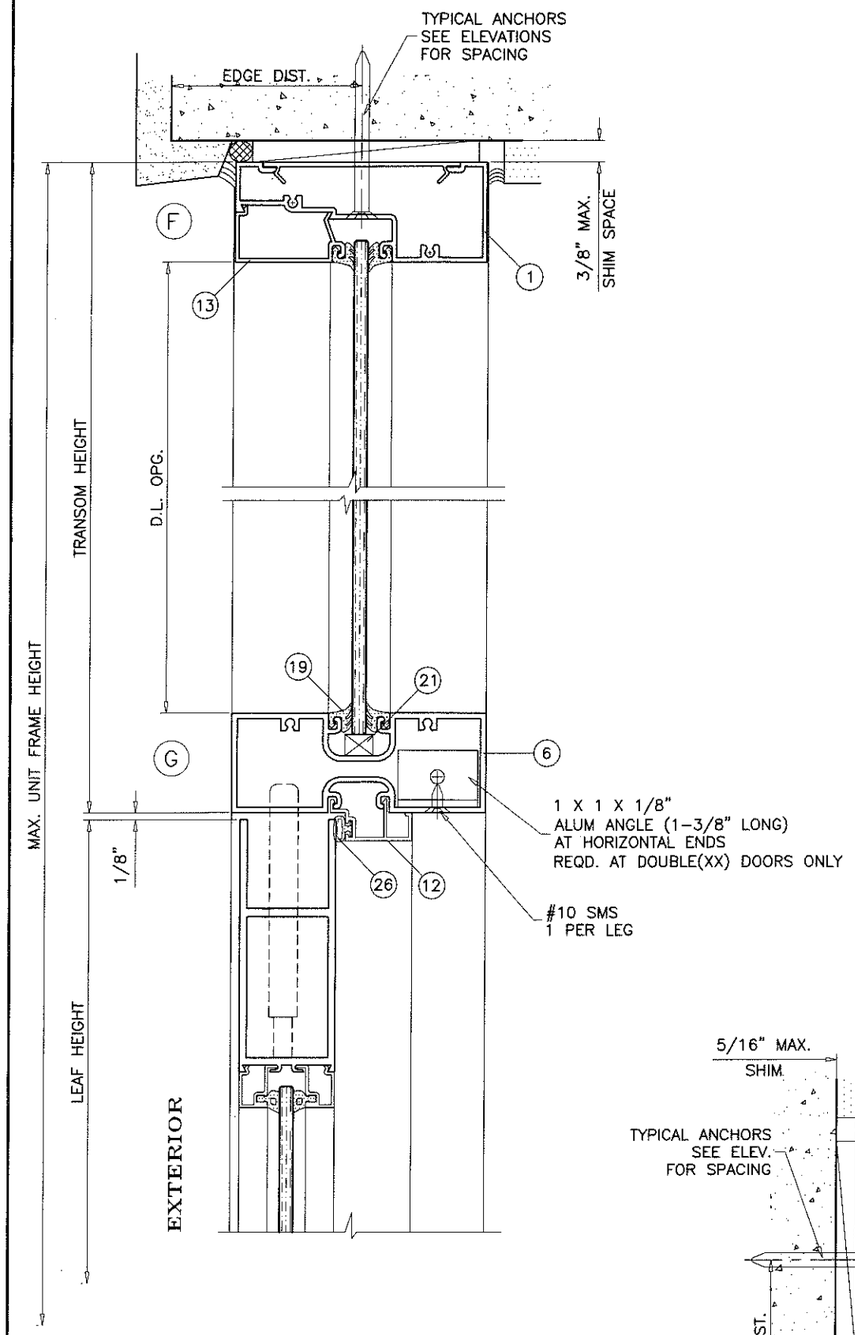

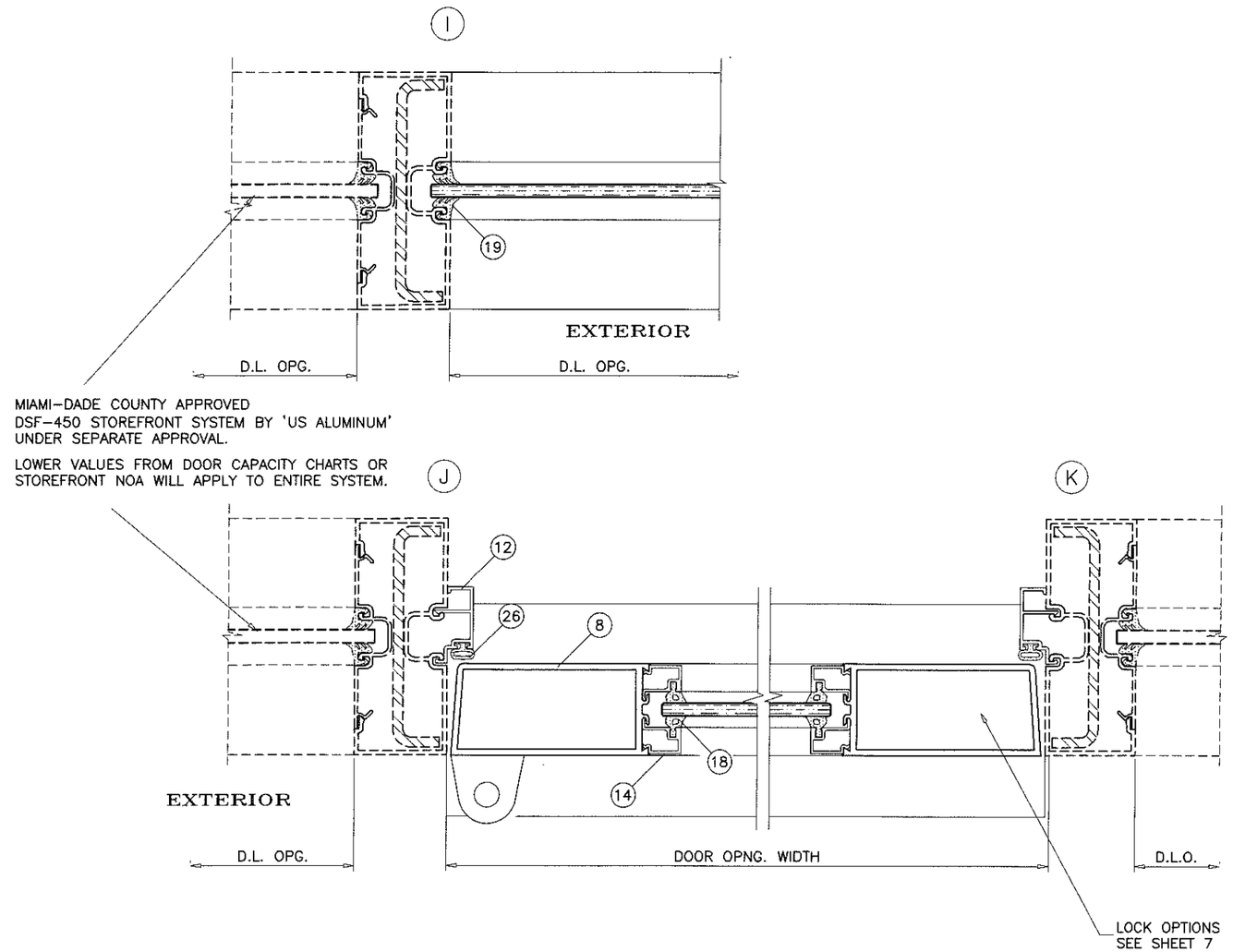

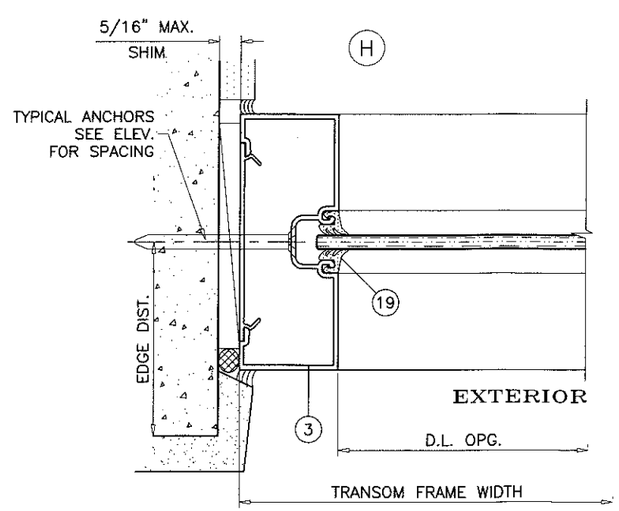

PRODUCT REVISED
as complying with the Florida
Building Code
Acceptance No. 15-0915.06
Expiration Date 10/13/17
By
Miami-Dade Product Control

JAVAD AHMAD
LICENSE
No. 70592
STATE OF
FLORIDA
PROFESSIONAL ENGINEER

SEP 08 2015

AL-FAROOQ CORPORATION
ENGINEERS & PRODUCT DEVELOPMENT
9360 SUNSET DRIVE, SUITE 220
MIAMI, FLORIDA 33173
(C.A.N. 3538)
TEL. (305) 264-8100 FAX. (305) 262-6978
COMP-ANL\W11-07DD

DMS-35 ALUM OUT-SWING ENTRANCE DOOR (N.I.)

US Aluminum
Division Of C.R. Laurence Co., Inc.
7500 N.W. 69TH AVE.
MIAMI, FL 33166
TEL. (305) 888-0077 FAX. (305) 884-3111

revisions:			
no	date	by	description
A	09.06.11		REV. PER BNC COMMENTS
B	08.19.15		UPDATED TO 2014 FBC
C	05.03.16		REV. PER RER COMMENTS

date: 02-24-11
scale: 3/8" = 1"
dr. by: TARIQ
chk. by:

drawing no.
W11-07

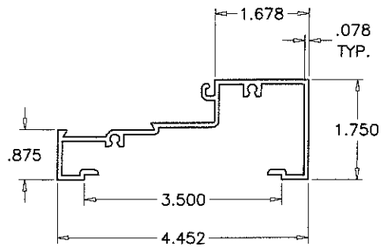

1 TRANSOM HEAD

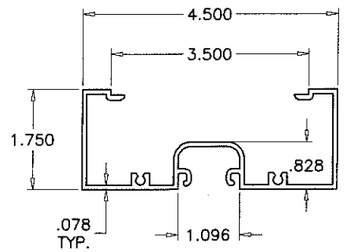

2 FRAME HEAD

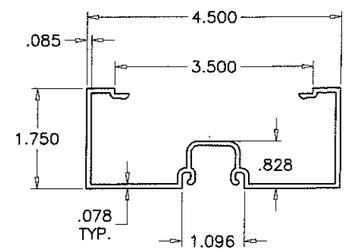

3 FRAME JAMB

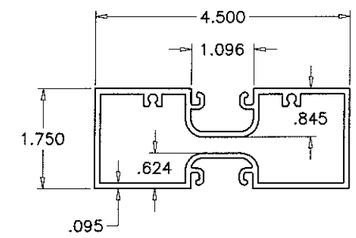

6 TRANSOM MULLION

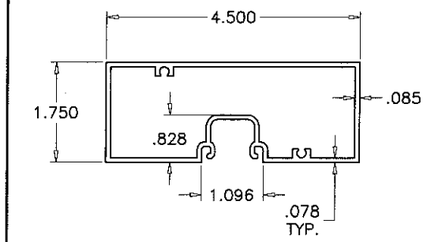

2A ALT. FRAME HEAD

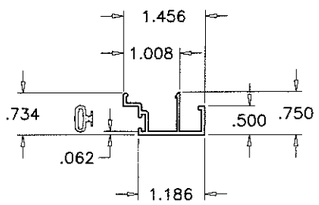

12 DOOR STOP

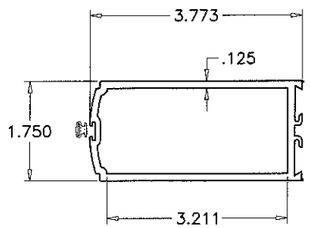

10 LOCK STILE

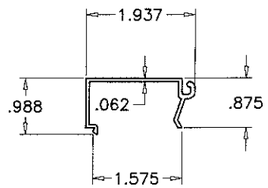

13 GLAZING STOP

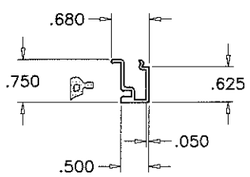

14 GLASS STOP

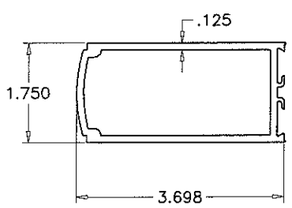

9 FIXED STILE

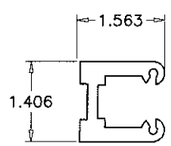

33 SHEAR BLOCK

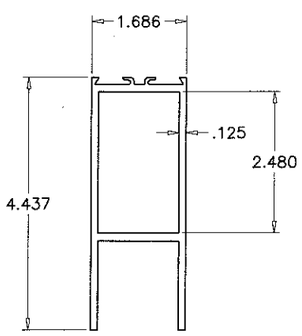

7 TOP/BOTTOM RAIL

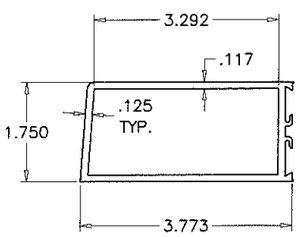

8 HINGE/PIVOT STILE

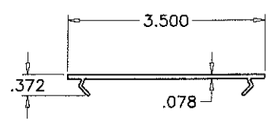

16 ANCHOR PLATE

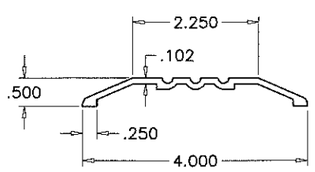

4 THRESHOLD

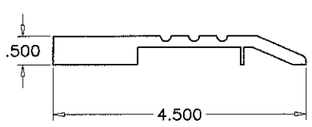

– PIVOT BASE

PRODUCT REVISED
as complying with the Florida
building Code
Acceptance No 15-0915.01
Expiration Date 10/13/17
By
Miami-Dade Product Control

SEP 08 2015

JAVAD AHMAD
LICENSE
No. 70592
STATE OF
FLORIDA
PROFESSIONAL ENGINEER

AL-FAROOQ CORPORATION
ENGINEERS & PRODUCT DEVELOPMENT
9360 SUNSET DRIVE, SUITE 220
MIAMI, FLORIDA 33173 (C.A.N. 3538)
TEL. (305) 264-8100 FAX. (305) 262-6978

COMP-ANL\W11-07DD

DMS-35 ALUM OUT-SWING ENTRANCE DOOR (N.I.)

US Aluminum
Division Of C.R. Laurence Co., Inc.
7500 N.W. 69TH AVE.
MIAMI, FL 33166
TEL. (305) 888-0077 FAX. (305) 884-3111

revisions:

no	date	by	description
A	09.06.11		REV. PER BNC COMMENTS
B	08.19.15		UPDATED TO 2014 FBC
C	05.03.16		NO CHANGE THIS SHEET

date: 02-24-11
scale: 3/8" = 1"
dr. by: TARIQ
chk. by:

drawing no.
W11-07

sheet 6 of 8

LOCK OPTIONS SINGLE DOORS:

OPTION #1

8 PLY MORTISE HOOK LOCK REGENT SERIES #2333
THUMB TURN ON INTERIOR AND KEY OPERATED
ON EXTERIOR AT 44-1/2" FROM BOTTOM.

OPTION #2

THREE POINT LOCK REGENT SERIES #2222
THUMB TURN ON INTERIOR AND KEY OPERATED
ON EXTERIOR AT 44-1/2" FROM BOTTOM.

LOCK OPTIONS DOUBLE DOORS:

OPTION #1

ACTIVE LEAF:

8 PLY MORTISE HOOK LOCK REGENT SERIES #2333
THUMB TURN ON INTERIOR AND KEY OPERATED
ON EXTERIOR AT 44-1/2" FROM BOTTOM.

INACTIVE LEAF

MANUALLY OPERTED FLUSH BOLTS REGENT #2502
WITH 3/8" DIA. BOLTS AT 12" FROM TOP AND BOTTOM

OPTION #2

ACTIVE LEAF:

THREE POINT LOCK REGENT SERIES #2222
THUMB TURN ON INTERIOR AND KEY OPERATED
ON EXTERIOR AT 44-1/2" FROM BOTTOM.

INACTIVE LEAF

MANUALLY OPERTED FLUSH BOLTS REGENT #2502
WITH 3/8" DIA. BOLTS AT 12" FROM TOP AND BOTTOM

ITEM #	PART #	QUANTITY	DESCRIPTION	MATERIAL	MANF./SUPPLIER/REMARKS
1	BCE-5457	1	TRANSOM HEAD	6063-T6	-
2	BCE-5451	1	FRAME HEAD	6063-T6	-
2A	BCE-5433	1	ALT. FRAME HEAD	6063-T6	-
3	BCE-5450	2	OPEN BACK JAMB	6063-T6	-
4	BCE-3340	1	THRESHOLD	6063-T6	-
6	BCE-452	AS REQD.	TRANSOM MULLION	6063-T6	-
7	DLD-33	2/ LEAF	TOP/BOTTOM RAIL	6063-T6	-
8	BCE-3315	AS REQD.	HINGE OR PIVOT STILE	6063-T5	-
9	BCE-3317	1/ LEAF	FIX STILE (INACTIVE PANEL)	6063-T5	-
10	BCE-3316	1/ LEAF	LOCK STILE (ACTIVE PANEL)	6063-T5	-
12	BCE-460	AS REQD.	DOOR STOP	6063-T5	-
13	BCE-459	AS REQD.	GLAZING STOP	6063-T5	-
14	DLD-6	AS REQD.	GLASS STOP	6063-T5	-
16	BCE-475	AS REQD.	ANCHOR PLATE, 3" LONG AT ANCHORS	6063-T6	-
18	-	AS REQD.	GASKET, BULB DUROMETER 67, BASE DUROMETER 90	SANTOPRENE	-
19	2546	AS REQD.	GLAZING GASKET, DUROMETER 65±5	SOFT PVC	MELTPOINT PLASTICS
20	-	2/ LITE	SETTING BLOCK (DOOR), DUROMETER 90±5	EPDM	1/4" X 1/2" X 1" LONG
21	-	2/ LITE	SETTING BLOCK (TRANSOM), DUROMETER 90±5	EPDM	7/16" X 3/4" X 1-7/8" LONG
23	#10 X 1"	AS REQD.	FRAME ASSEMBLY SCREWS	-	P.H. SMS
24	12-24 X 1/2"	4/ HASP	HINGE INSTALLATION SCREWS	-	F.H. MACHINE SCREWS
26	BW-76	-	BULB W'STRIPPING, DUROMETER 70±5	VINYL	.444"H X .280 T-SLOT
27	T4216-K	-	PILE WITH FIN WEATHERSTRIPPING	-	ULTRAFAB
29	DH-4	-	SHEAR BLOCK	6063-T5	-
30	-	2	3 X 2 X 1/8" ANGLE, 1-3/4" LONG	ALUMINUM	-
32	-	2/ LEAF	FLUSH BOLT GUIDE CHANNEL	STEEL	3" LONG
33	-	2/ HINGE	HINGE REINFORCING PLATES	STEEL	1-1/2" X 1/4" X 8" LONG

HINGES:

OPTION #1:

4-1/2 X 4" X .134" THK. TWO PIECE STAINLESS STEEL
BUTT HINGES BY HAGER (2) AT 8" FROM TOP AND BOTTOM
(1) AT MIDSPAN OF LEAF AS REQD.

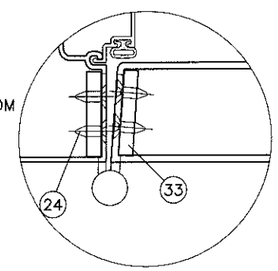

OPTION #2:

CAST ALUMINUM OFFSET PIVOT HINGE SERIES 4309
BY 'REGENT'
(2) AT TOP AND BOTTOM
(1) AT MIDSPAN OF LEAF AS REQD.

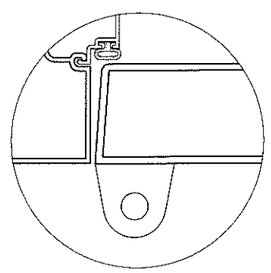

SEALANTS:

FRAME CORNERS, ASSEMBLY SCREWS AND HEADS OF
ANCHOR SCREWS AT SILL TO BE SEALED WITH SEALER.
LEAF JOINTS SEALED WITH SILICONE.

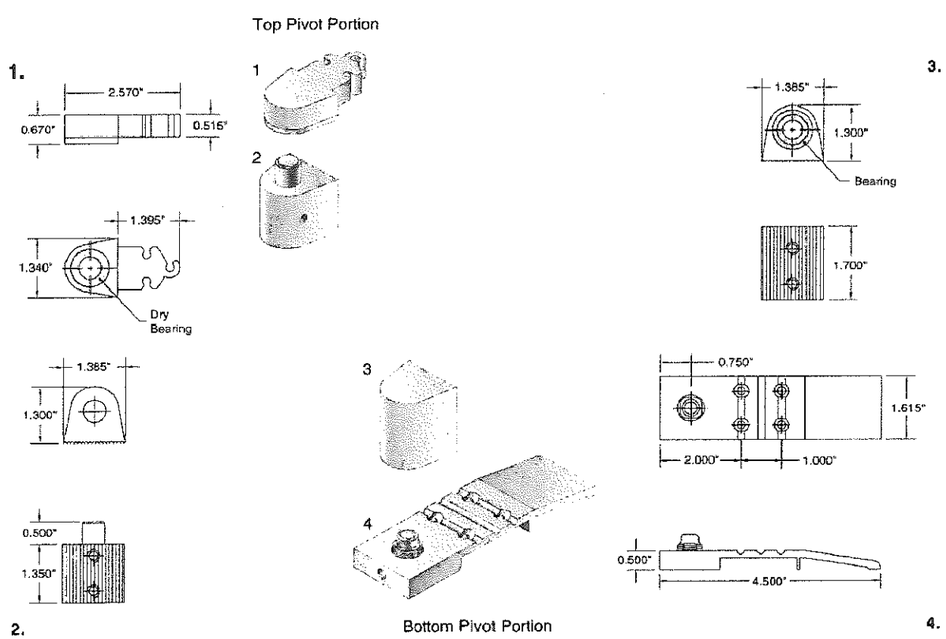

PRODUCT REVISED
as complying with the Florida
Building Code
Acceptance No. 15-0915.06
Expiration Date 10/13/17
By [signature]
Miami-Dade Product Control

SEP 08 2015

AVAD AHMAD
LICENSE
No. 70592
STATE OF FLORIDA
PROFESSIONAL ENGINEER

AL-FAROOQ CORPORATION
ENGINEERS & PRODUCT DEVELOPMENT
9360 SUNSET DRIVE, SUITE 220
MIAMI, FLORIDA 33173 (C.A.N. 3538)
TEL. (305) 264-8100 FAX. (305) 262-6978

COMP-ANL\W11-07DD

DMS-35 ALUM OUT-SWING ENTRANCE DOOR (N.I.)

US Aluminum
Division Of C.R. Laurence Co., Inc.
7500 N.W. 69TH AVE.
MIAMI, FL 33166
TEL. (305) 888-0077 FAX. (305) 884-3111

revisions:			
no	date	by	description
A	09.06.11		REV. PER BNC COMMENTS
B	08.19.15		UPDATED TO 2014 FBC
C	05.03.16		REV. PER RER COMMENTS

date: 02-24-11
scale: 3/8" = 1"
dr. by: TARIQ
chk. by:

drawing no.
W11-07

sheet 7 of 8

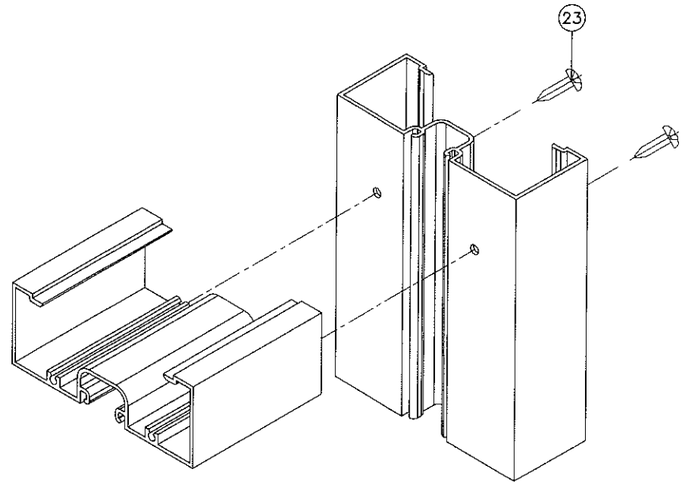

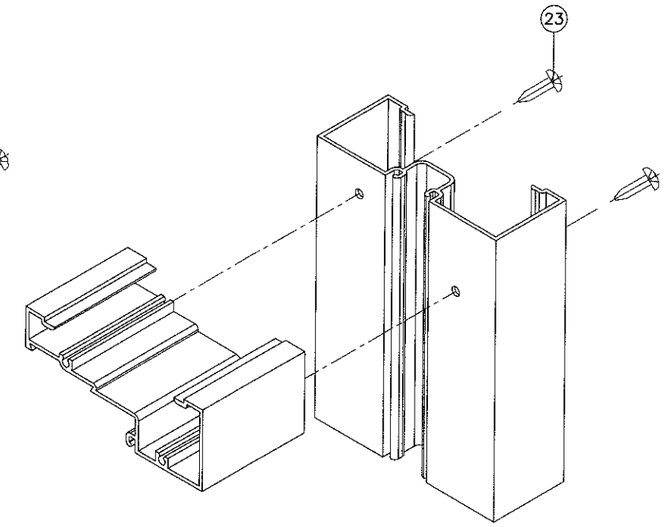

FRAME TOP CORNER

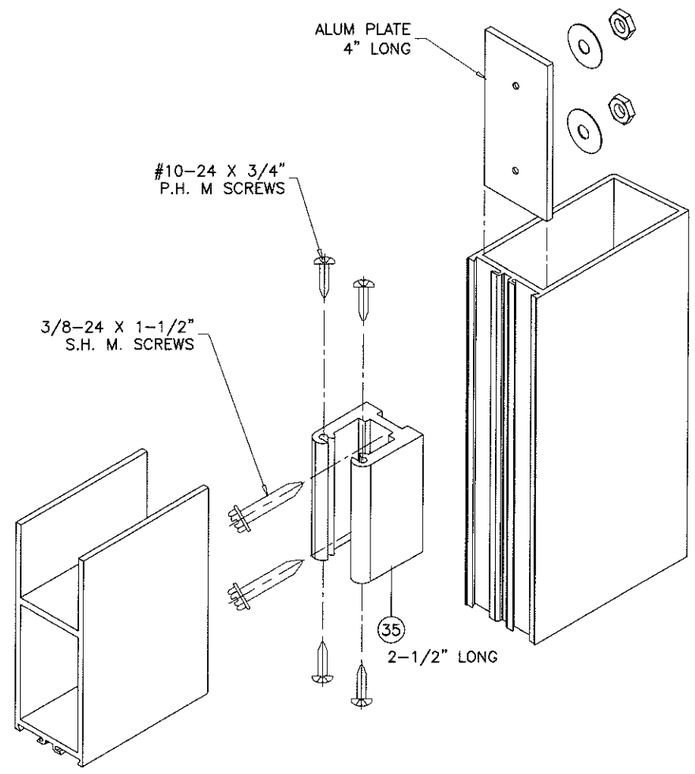

DOOR TOP/BOTTOM CORNER

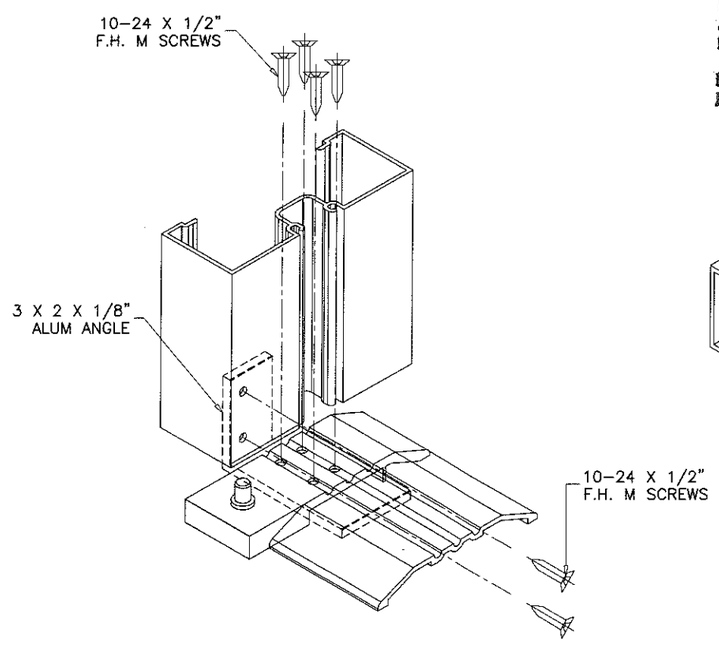

FRAME LOWER CORNER

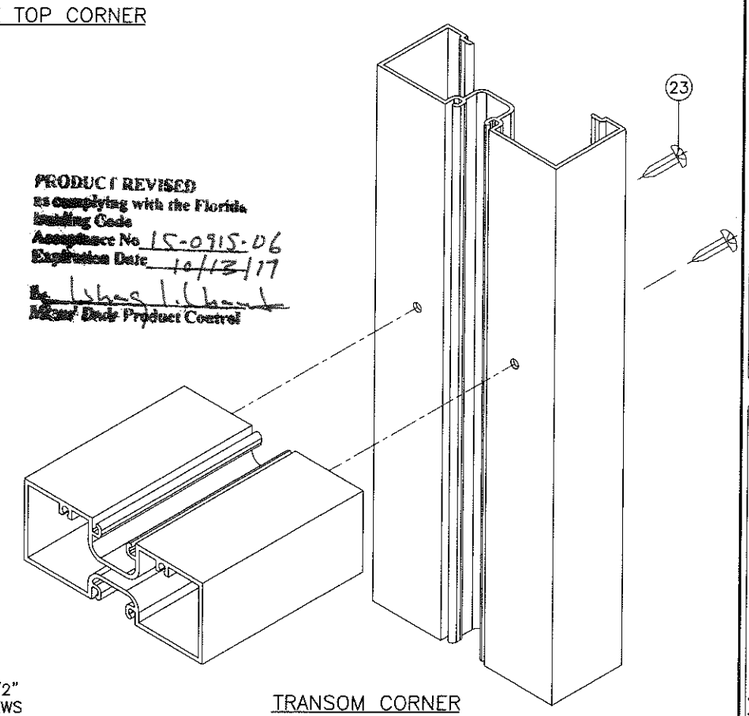

TRANSOM CORNER

PRODUCT REVISED
as complying with the Florida
Building Code
Acceptance No. 15-0915.06
Expiration Date 10/13/17
By
Miami-Dade Product Control

SEP 08 2016

JAVAD AHMAD
LICENSE
No. 70592
STATE OF
FLORIDA
PROFESSIONAL ENGINEER

AL-FAROOQ CORPORATION
ENGINEERS & PRODUCT DEVELOPMENT
9360 SUNSET DRIVE, SUITE 220
MIAMI, FLORIDA 33173 (C.A.N. 3538)
TEL. (305) 264-8100 FAX. (305) 262-6978

COMP-ANL\W11-07DD

DMS-35 ALUM OUT-SWING ENTRANCE DOOR (N.I.)

US Aluminum
Division Of C.R. Laurence Co., Inc.
7500 N.W. 69TH AVE.
MIAMI, FL 33166
TEL. (305) 888-0077 FAX. (305) 884-3111

revisions:

no	date	by	description
A	09.06.11		REV. PER BNC COMMENTS
B	08.19.15		UPDATED TO 2014 FBC
C	05.03.16		NO CHANGE THIS SHEET

date: 02-24-11
scale: 3/8" = 1"
dr. by: TARIQ
chk. by:

drawing no.
W11-07

sheet 8 of 8