MIAMI-DADE COUNTY
PRODUCT CONTROL SECTION
11805 SW 26 Street, Room 208
Miami, Florida 33175-2474
T (786) 315-2590 F (786) 315-2599
www.miamidade.gov/economy

DEPARTMENT OF REGULATORY AND ECONOMIC RESOURCES (RER)
BOARD AND CODE ADMINISTRATION DIVISION

NOTICE OF ACCEPTANCE (NOA)

Horton Automatics Division of Overhead Door
4242 Baldwin Boulevard
Corpus Christi, TX 78405

SCOPE:

This NOA is being issued under the applicable rules and regulations governing the use of construction materials. The documentation submitted has been reviewed and accepted by Miami-Dade County RER -Product Control Section to be used in Miami Dade County and other areas where allowed by the Authority Having Jurisdiction (AHJ).

This NOA shall not be valid after the expiration date stated below. The Miami-Dade County Product Control Section (In Miami Dade County) and/or the AHJ (in areas other than Miami Dade County) reserve the right to have this product or material tested for quality assurance purposes. If this product or material fails to perform in the accepted manner, the manufacturer will incur the expense of such testing and the AHJ may immediately revoke, modify, or suspend the use of such product or material within their jurisdiction. RER reserves the right to revoke this acceptance, if it is determined by Miami-Dade County Product Control Section that this product or material fails to meet the requirements of the applicable building code.

This product is approved as described herein, and has been designed to comply with the Florida Building Code, including the High Velocity Hurricane Zone.

DESCRIPTION: Series "110" (O-Sx-Sx-O) Aluminum Automatic Sliding Door w/ Breakout-NI.

APPROVAL DOCUMENT: Drawing No. **110906 Rev 10**, titled "Series 2001/110 Non-Impact Slide", sheets 1 through 5, of 5 prepared by manufacturer, dated 11/07/06 and last revised on 09-11-15, signed and sealed by John E. Scates, P.E., bearing the Miami-Dade County Product Control Revision stamp with the Notice of Acceptance number and expiration date by the Miami-Dade County Product Control Section.

MISSILE IMPACT RATING: None

Limitations:

1. Approved Hurricane protection Devices complying w/ FBC are required.
2. Not approved where water infiltration is required.
3. See sheet **3** for anchor and substrates options. Applicable edge distance to be measured from screw center line to the outer face of the substrate.
4. See glazing details in sheet **2**. See Max DLO in sheet **1** and max DLO for optional Muntins in sheet **3.**
5. Electrical/ Electronic functions are not part of this approval and to be reviewed by appropriate Bldg. official.

LABELING: Each unit shall bear a permanent label with the manufacturer's name or logo, city, state and series and following statement: "Miami-Dade County Product Control Approved", noted herein.

RENEWAL of this NOA shall be considered after a renewal application has been filed and there has been no change in the applicable building code negatively affecting the performance of this product.

TERMINATION of this NOA will occur after the expiration date or if there has been a revision or change in the materials, use, and/or manufacture of the product or process. Misuse of this NOA as an endorsement of any product, for sales, advertising or any other purposes shall automatically terminate this NOA. Failure to comply with any section of this NOA shall be cause for termination and removal of NOA.

ADVERTISEMENT: The NOA number preceded by the words Miami-Dade County, Florida, and followed by the expiration date may be displayed in advertising literature. If any portion of the NOA is displayed, then it shall be done in its entirety.

INSPECTION: A copy of this entire NOA shall be provided to the user by the manufacturer or its distributors and shall be available for inspection at the job site at the request of the Building Official.

This NOA **revises & renews NOA #13-0530.13** and consists of this page 1 and evidence pages E-1, as well as approval document mentioned above.

The submitted documentation was reviewed by **Ishaq I. Chanda, P.E.**

MIAMI-DADE COUNTY APPROVED

3/31/16

Horton Automatics Division of Overhead Door

NOTICE OF ACCEPTANCE: EVIDENCE SUBMITTED

A. DRAWINGS

1. Manufacturer's die drawings and sections (see files below)
2. Drawing No. **110906**, titled "Series 2001/110 Non-Impact Slide", sheets 1 through 5, of 5 prepared by manufacturer, dated 11/07/06 and last revised on 10-02-13, signed and sealed by John E. Scates, P.E.

B. TESTS (submitted under file **#13-0530.13/#12-0801.05/ #08-0528.01)**

1. Test reports on: 1) Air Infiltration Test, per FBC, TAS 202-94
   2) Uniform Static Air Pressure Test, Loading per FBC TAS 202-94
   3) Water Resistance Test, per FBC, TAS 202-94 (Not conducted)
   4) Forced Entry Test, per FBC 2411 3.2.1, TAS 202-94

along with installation diagram of an aluminum automatic sliding glass doors, prepared by Hurricane Testing Laboratories, Test Report No. **HTL-0322-1103-07**, dated 03/14/08 and revised on 06/12/08 by an addendum letter, signed and sealed by Vinu Abraham, P.E.

C. CALCULATIONS

1. Anchor verification calculations and structural analysis complying w/ FBC 2014 (5th Edition), dated 09/11/15, prepared, signed and sealed by John E. Scates, P.E.
2. Glazing complies w/ ASTME-1300-02, -04 & -09.

D. QUALITY ASSURANCE

1. Miami Dade Department of Regulatory and Economic Resources (RER).

E. MATERIAL CERTIFICATIONS

1. Technical data sheet of ExxonMobil Chemical's Santoprene™ 121-67W175 thermoplastic, extruded by Central Chemical Inc.

F. STATEMENTS

1. Statement letter of conformance to FBC 2014(5th Edition) & "No financial interest", dated 09/11/15, signed & sealed by John E. Scates, P.E.
2. Addendum letter dated 06-12-08, issued by Hurricane Testing lab, signed and sealed by Vinu Abraham, P. E. (submitted under files **#12-0801.05/ #08-0528.05)**
3. Lab compliance as part of the above referenced test report.

G. OTHER

1. This NOA **revises** & **renews** NOA # **13-0530.13**, expiring on October 09, 2023.

Ishaq I. Chanda

Ishaq I. Chanda, P.E.
Product Control Examiner
NOA No. 15-0922.09
Expiration Date: October 09, 2023
Approval Date: April 07, 2016

NOTE:
For fastener location and type see sheets 3
The 1.6 wind load allowance was used in the wood anchor calculations.

Locking Mechanism : 3point Locking Device Standard (24)(25)(27)
(see sheet 4)

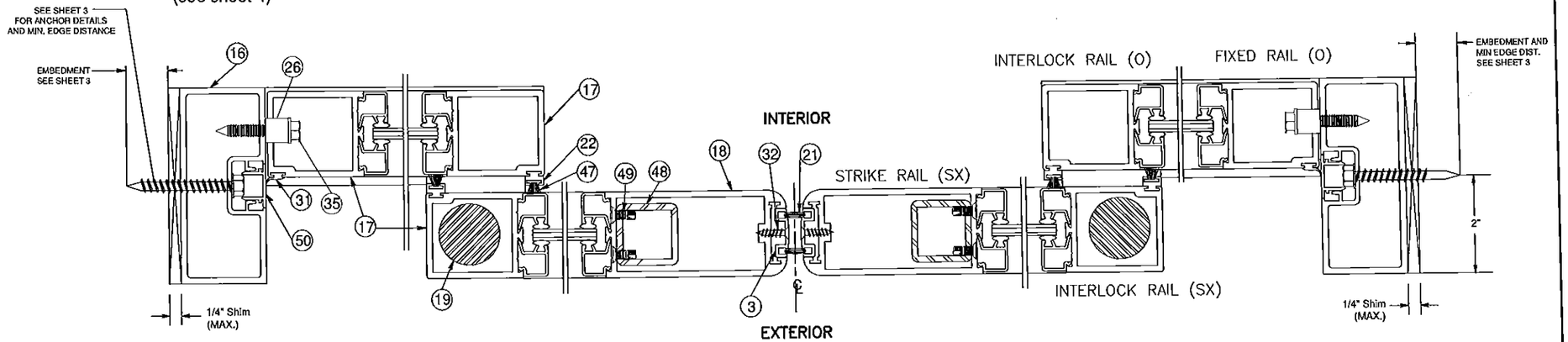

HORIZONTAL SECTION (2/1)

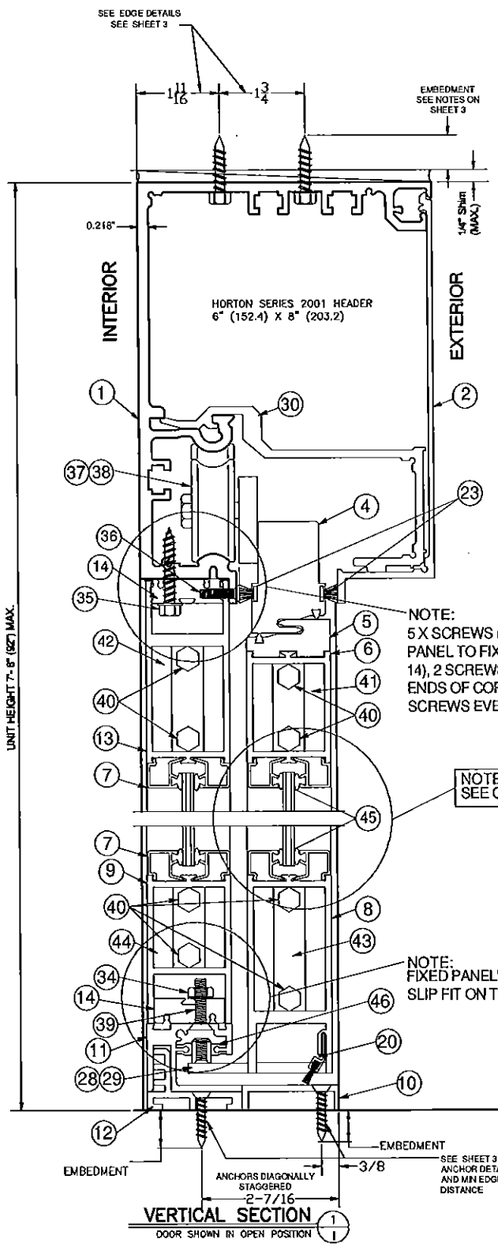

NOTE:
5 X SCREWS (ITEM 36) TO FASTEN FIXED PANEL TO FIXED CORNERBLOCK (ITEM 14), 2 SCREWS MOUNTED 1.00" FROM ENDS OF CORNER BLOCK WITH OTHER 3 SCREWS EVENLY SPACED

NOTE:
SEE GLAZING DETAIL SEE SHEET 2

NOTE:
FIXED PANEL'S BOTTOM RAIL (ITEM 9) TO BE SLIP FIT ON TO CORNER BLOCK (ITEM 14)

VERTICAL SECTION (1/1)
DOOR SHOWN IN OPEN POSITION

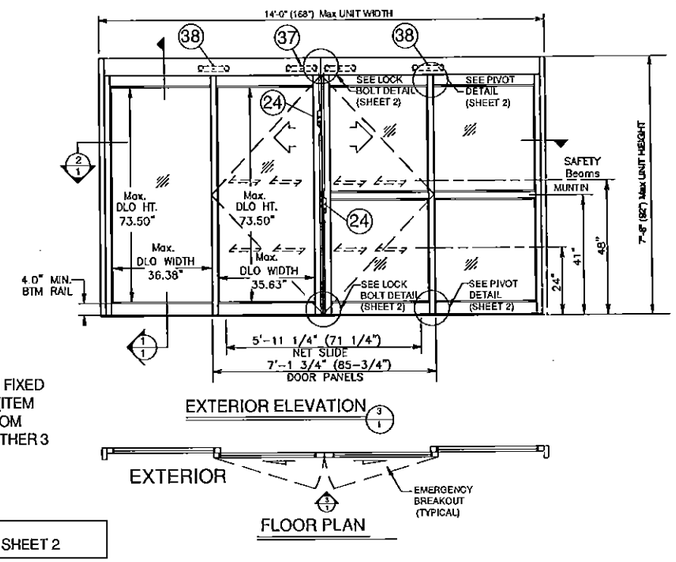

Available Unit Sizes:	Panel Width nom. door	Net Slide opening
14'-0"W X 7'-8"H Max size (0-SX-SX-0)	2@42-7/8=85-3/4"	71 1/4"

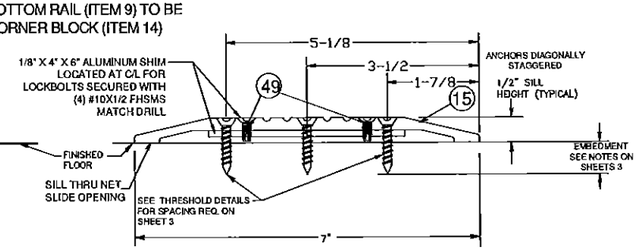

THRESHOLD DETAIL

3 - Point Lock
(See Sheet 4)

Series 110 Non-Impact Slide

NOTES:
1. This product has been designed and tested to comply with the current Florida Building Code, including High Velocity Hurricane Zone (HVHZ).
2. Approved hurricane protection devices complying with FBC are required, as applicable.
3. Electrical/Electronic functions are not part of this approval and must be reviewed by appropriate building official.
4. See anchor installation details concerning types, substrate, edge distance, spacing and embedment on sheet 3.
5. 1x or 2x wood bucks by others must be secured properly to transfer loads using appropriate fasteners and quantities. Fasteners to secure wood buck must penetrate concrete or grouted CMU jamb substrate minimum 2.0" at head and sill.
6. Permit holder shall verify the adequacy of the existing structure to withstand additional imposed loads.
7. 1/4" max shim allowed. Type of shim to comply with Florida Building Code and be capable of resisting frame rotation.
8. All structural extrusions are 6063-T5 Aluminum with typical thickness of 1/8", unless otherwise specified.

Bi - Parting Slide Doors	
Where Water Infiltration Requirement is needed	Where Water Infiltration Requirement is NOT needed
Not Approved	± 80 PSF

JOHN E. SCATES
3121 FAIRGATE DR.
CARROLLTON, TX 75007
FL PE 51737
9/11/15
JOHN E. SCATES LICENSE No. 51737 STATE OF FLORIDA PROFESSIONAL ENGINEER

PRODUCT REVISED
as complying with the Florida Building Code
Acceptance No 15-0922.09
Expiration Date OCT 09, 2023
Miami Dade Product Control

NO.	REVISIONS DESCRIPTION	DATE
3	UPDATED DWG PER UNIT TESTED	12/17/07
4	ADDED ITEMS 51 & 52	03/14/08
5	ADDED +/- 80PSF RATING	03/20/08
6	REVISED PER METRO DADE ENGR.	05/27/08
7	REVISED PER METRO DADE ENGR.	07/15/08
8	REVISED SEALANT DETAILS	04/23/09
9	REVISED FOR NOA RENEWAL	06/13/13
10	REVISED FOR NOA	09/09/15

ARCHITECT:
CONTRACTOR:
SERIES: 110 TYPE: "0-SX-SX-0"
STILE: NARROW FINISH:
ACTUATION:
2001/110 Non-Impact Slide Dwg. No. 110906

Horton AUTOMATICS
A DIVISION OF OVERHEAD DOOR CORP.
4242 BALDWIN BOULEVARD
CORPUS CHRISTI, TEXAS 78405-3399
361-888-5591 1-800-531-3111
FAX: 361-888-6510, 1-800-531-3108

JOB METRO-DADE
LOCATION:
DISTRIBUTOR:
DWN: LRod P.O. # SHEET 1 of 5
CHK: J LACKEY DATE 11/07/06 REVISION 10

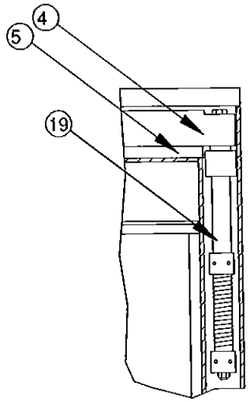

"SX" PANEL
TOP PIVOT

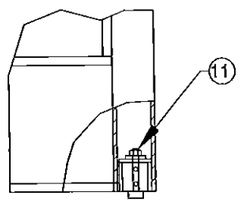

"SX" PANEL
BTM. PIVOT

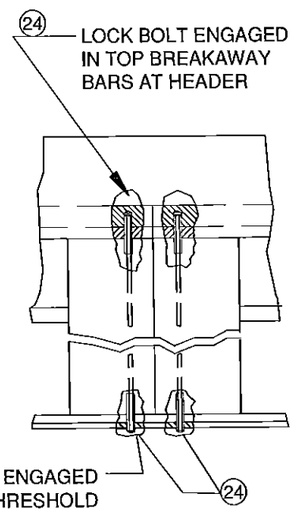

LOCK BOLT DETAIL

3-POINT LOCK

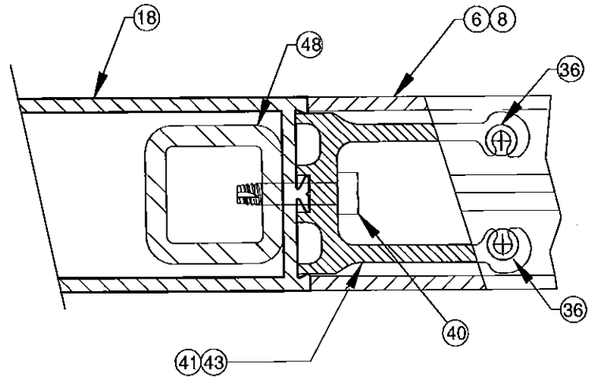

CONNECTION BLOCK
WITH REINFORCEMENT

STRIKE RAIL (SX)

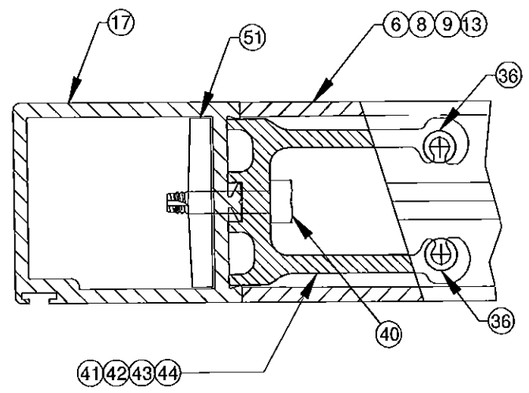

CONNECTION BLOCK

INTERLOCK RAIL (SX)
INTERLOCK RAIL (O)
FIXED RAIL (O)

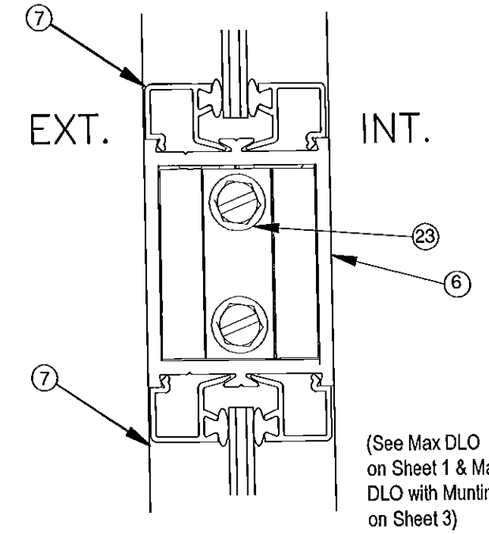

(See Max DLO on Sheet 1 & Max DLO with Muntin on Sheet 3)

MUNTIN OPTION

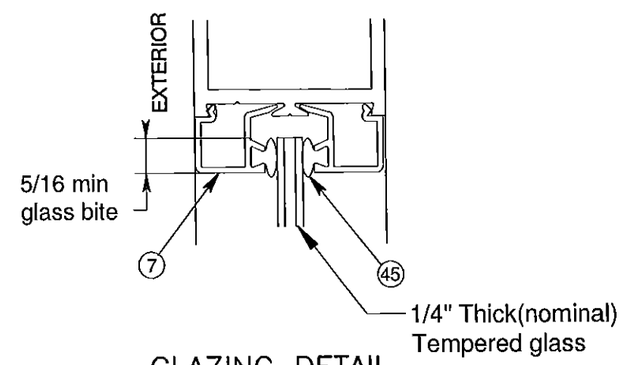

GLAZING DETAIL

WEATHERSEALS:

C350 NOSING SEAL	SCHLEGEL CORP. SKIRTING SEAL #1104-5101
C524-FL SIDE PANEL BOTTOM SEAL	FELTON NYLON BRISTLE #490621
C293 WEATHER SEAL	SCHLEGEL CORP. #8430-5016-7

HARDWARE:

C883 THRESHOLD/HEADER BOLT	ADAMS-RITE #4015

Series 110 Non-Impact Slide

JOHN E. SCATES
3121 FAIRGATE DR.
CARROLLTON, TX 75007
FL PE 51737

John E Scates 9/11/15

JOHN E. SCATES
LICENSE
No. 51737
STATE OF
FLORIDA
PROFESSIONAL ENGINEER

PRODUCT REVISED
as complying with the Florida
Building Code
Acceptance No 15-0922.09
Expiration Date 10/09/2023
By Ishaq I. Chanda
Miami Dade Product Control

NO.	REVISIONS DESCRIPTION	DATE
3	UPDATED DWG PER UNIT TESTED	12-17-07
4	ADDED ITEMS 51 & 52	03-14-08
5	ADDED +/- 80 PSF RATING	03-20-08
6	REVISED PER METRO DADE ENGR	05-27-08
7	REVISED PER METRO DADE ENGR	07-15-08
8	REVISED SEALANT DETAILS	04-23-09
9	REVISED FOR NOA RENEWAL	08-13-13
10	REVISED FOR NOA	09-09-15

ARCHITECT:
CONTRACTOR:
SERIES: 110 TYPE: "O-SX-SX-O"
STILE: NARROW FINISH:
ACTUATION:

Misc. Details
Dwg. No. 110906

Horton AUTOMATICS
A DIVISION OF OVERHEAD DOOR CORP.
4242 BALDWIN BOULEVARD
CORPUS CHRISTI, TEXAS 78405-3399
361-888-5591 1-800-531-3111
FAX: 361-888-6510, 1-800-531-3109

JOB METRO-DADE
LOCATION:
DISTRIBUTOR:
DWN: LRod P.O. # SHEET 2 of 5
CHK: J LACKEY DATE 11/07/06 REVISION 10

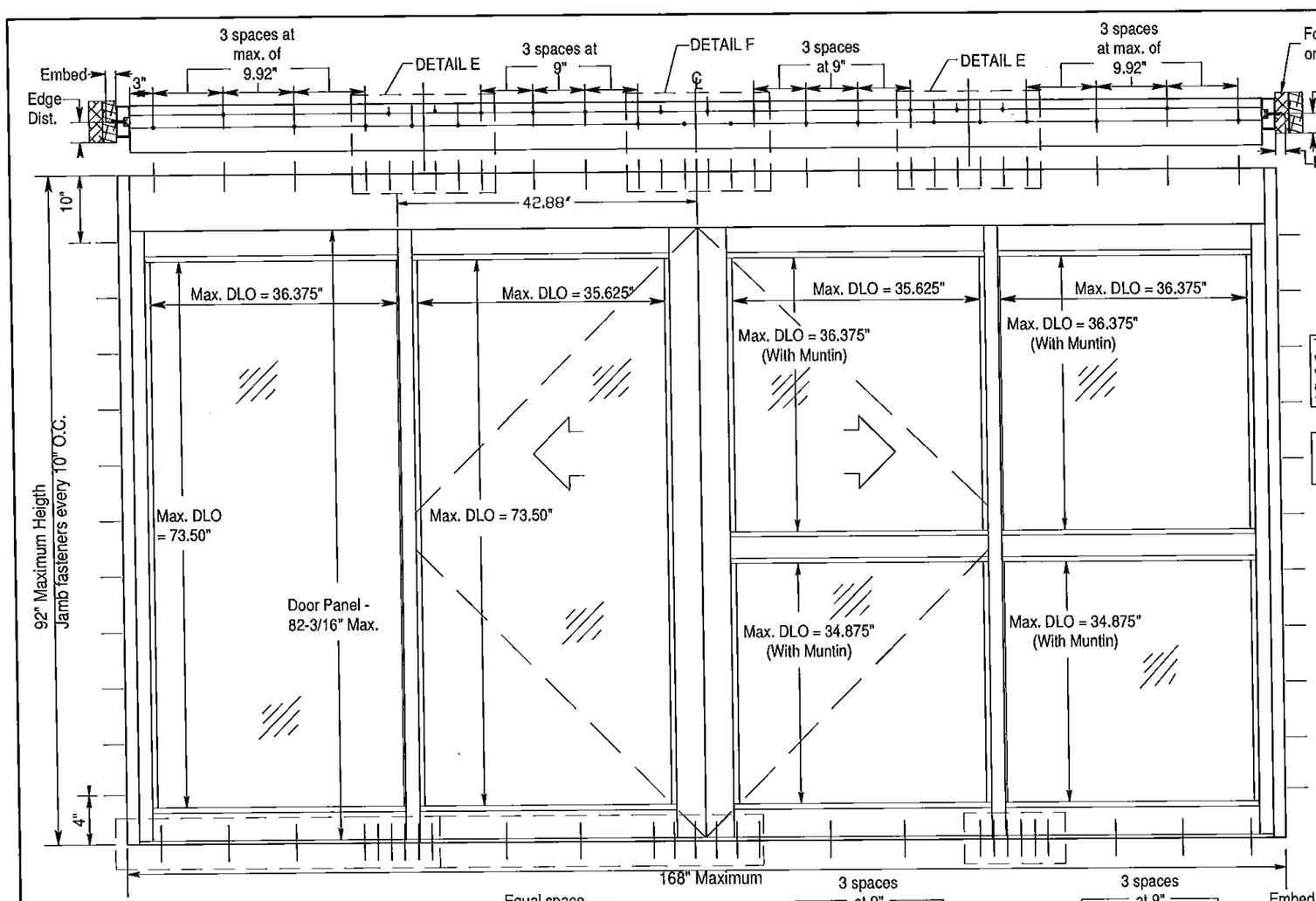

TYPE 110
Header

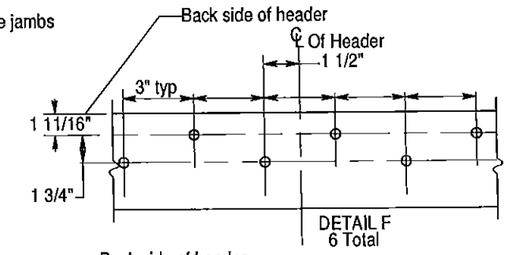

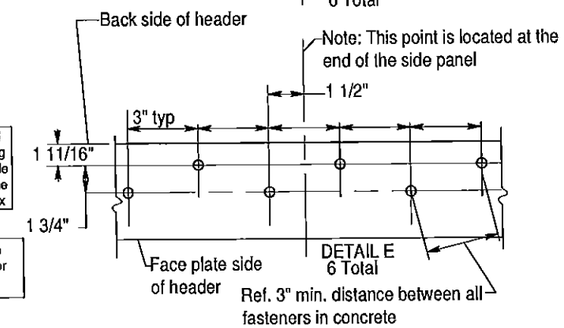

The frame must be shimmed with a type of shim complying with the Florida Building Code and is capable of resisting the frame's rotation-1/4" thk. Max

The 1.6 wind load allowance was used in the wood anchor calculations.

HEADER

Steel (0.125" Thick, Fy=36 KSI) – INTERCORP #14 Steel HWH Self-Drilling Screw (Grade 5), 0.625" Min. Edge Distance from substrate (Full Thread Engagement)

Aluminum(0.125" Thick Min./6063-T5) – 1/4"-14 HWH Sheetmetal Screw (Grade 5), 1" Min. Edge Distance from substrate (Full Thread Engagement)

JAMBS

Steel (0.125" Thick, Fy=36 KSI) – ITW TEKS SCREW (Grade 5) #14-20, HWH Self-Drilling Screw 0.625" Minimum Edge Distance from substrate (Full Thread Engagement)

Concrete(3350 PSI) – Crete-Flex SS4 1/4" HWH Concrete Screw/Anchor, 1.75" Embed, 2.5" Min. Edge Distance from substrate

Masonry(Solid CMU ASTM C-90 Block) – Crete-Flex SS4 1/4" HWH Concrete Screw/Anchor, 1.25" Embed, 2.5" Min. Edge Distance from substrate

Aluminum(0.125" Thick Minimum/6063-T5) – 1/4"-14 HWH Sheetmetal Screw (Grade 5), 1" Min. Edge Distance from substrate (Full Thread Engaement)

Wood(#2 SYP)-1/4" x 4" Long Lag Bolt – Grade 5, 2.75" Minimum Penetration, 1" Minimum Edge Distance from substrate Minimum Buck (2) 2X8 W/Min G = .55.

THRESHOLD

Steel (0.125" Thick, Fy=36 KSI)– ITW TEKS SCREW #14-20 PFH w/Wings Self-Drilling Screw (Grade 5), 0.625" Minimum Edge Distance from substrate (Full Thread Engagement)

Concrete(3350 PSI)– Crete-Flex SS4 FH 1/4" Concrete Screw 1.75" Embed, 2.5" Minimum Edge Distance from substrate

Aluminum(0.125" Thick Minimum/6063-T5) – 1/4"-14 FH Sheetmetal Screw (Grade 5), 1" Minimum Edge Distance from substrate (Full Thread Engagement)

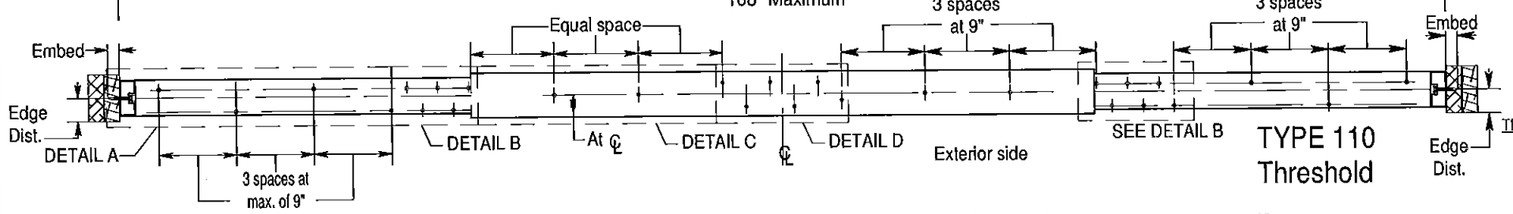

TYPE 110
Threshold

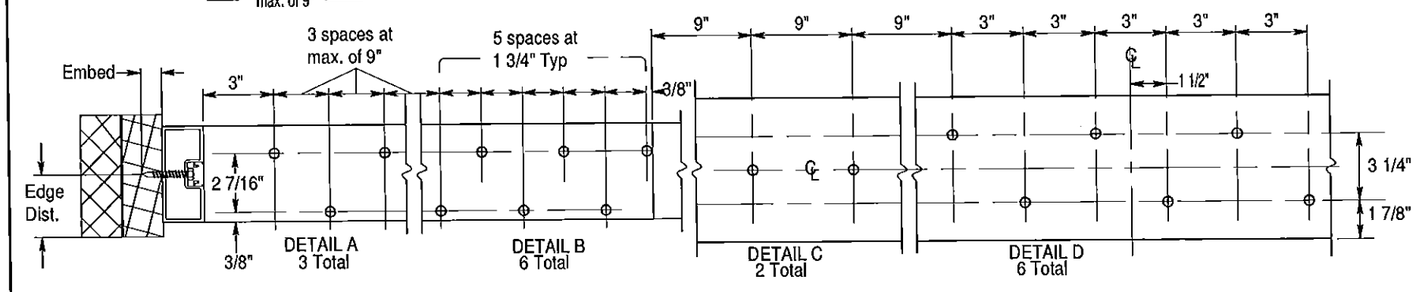

Series 110 Non-Impact Slide Anchor Locations

JOHN E. SCATES
3121 FAIRGATE DR.
CARROLLTON, TX 75007
FL PE 51737

9/11/15

JOHN E. SCATES LICENSE No. 51737 STATE OF FLORIDA PROFESSIONAL ENGINEER

PRODUCT REVISED
as complying with the Florida Building Code
Acceptance No. 15-0422.09
Expiration Date 10/09/2023
By Ishay I. Cherniak
Mgr. Dade Product Control

NO.	REVISIONS DESCRIPTION	DATE
3	UPDATED DWG PER UNIT TESTED	12/17/07
4	ADDED ITEMS 51 & 52	03/14/08
5	ADDED +/- 80 PSF RATING	03/20/08
6	REVISED PER METRO DADE ENGR.	05/27/08
7	REVISED PER METRO DADE ENGR.	07/15/08
8	REVISED SEALANT DETAILS	04/23/09
9	REVISED FOR NOA RENEWAL	08/13/13
10	REVISED FOR NOA	09/09/15

ARCHITECT:
CONTRACTOR:
SERIES: 110 TYPE: "0-SX-SX-0"
STILE: NARROW FINISH:
ACTUATION:

Anchor Locations
Dwg. No. 110906

Horton AUTOMATICS
A DIVISION OF OVERHEAD DOOR CORP.
4242 BALDWIN BOULEVARD
CORPUS CHRISTI, TEXAS 78405-3399
361-888-5591 1-800-531-3111
FAX: 361-888-6510, 1-800-531-3108

JOB METRO-DADE
LOCATION:
DISTRIBUTOR:
DWN: LRod P.O. #
CHK: J.LACKEY DATE: 11/07/06
SHEET 3 of 5
REVISION 10

ITEM #	HORTON PART NUMBER	DESCRIPTION
1	C03600.005AB	ALUMINUM EXTRUSION: HEADER
2	C03601.002AB	ALUMINUM EXTRUSION: HEADER FACEPLATE
3	C00358.000R	ALUMINUM EXTRUSION: ASTRAGAL
4	C00314.0000	ALUMINUM EXTRUSION: INTERLOCK TOP
5	C00327.0000AB	ALUMINUM EXTRUSION: INTERLOCK LOWER
6	C00337.000R	ALUMINUM EXTRUSION: TOP RAIL (SX) & MUNTIN (SX/O)
7	C00338.000R	ALUMINUM EXTRUSION: GLASS STOP
8	C00336.0001	ALUMINUM EXTRUSION: BOTTOM RAIL (SX)
9	C00325.0002	ALUMINUM EXTRUSION: BOTTOM RAIL (O)
10	C00315.0000	ALUMINUM EXTRUSION: TRACK FILLER
11	C00330.0001	ALUMINUM EXTRUSION: BOTTOM GUIDE
12	C00386.0001	ALUMINUM EXTRUSION: ADAPTOR
13	C02801.0000	ALUMINUM EXTRUSION: TOP RAIL (O)
14	C02899.0002	ALUMINUM EXTRUSION: CORNER BLOCK (USED AS REINFORCEMENT)
15	C00390.0000	ALUMINUM EXTRUSION: THRESHOLD 7"
16	C00351.0000	ALUMINUM EXTRUSION: JAMB TUBE 4" X 1-3/4 W/ POCKET
17	C00335.000R	ALUMINUM EXTRUSION: VERTICAL RAIL (SX/O INTERLOCK) (O FIXED)
18	C00363.0000	ALUMINUM EXTRUSION: VERTICAL RAIL (SX STRIKE)
19	C00818.000R	BAR TORSION
20	C00524.00FL	WEATHERSEAL BRUSH (FELTON #490621)
21	C00350.0000	NOSING SEAL SCHLEGEL #1104-5101
22	C00397.0000	ADAPTER FOR C00389.01FL
23	C00293.0000	WEATHER SEAL BRUSH SCHLEGEL #8430-5016-7
24	C00454.0000	LOCK, ADAMS RITE MS1850S W/ ADAMS RITE 4015 HEADER/THRESHOLD BOLT
25	C00463.0000	THUMBTURN ADAMS RITE 4066
26	C02098.0000	SECURITY POST; 1/2" O.D. X 3/4" LG X .083" WALL ALUM. TUBE
27	C00883.0000	3/8 HEXT BOLT ADAMS RITE 4015 EXTENDING INTO HEAD AND SILL 1/2"
28	C00843.01FL	BOTTOM GUIDE DOOR MOUNTED
29	C00844.01FL	BOTTOM GUIDE DOOR MOUNTED
30	C03638.0000	HEADER & FACEPLATE SUPPORT
31	C00371.000R	WEATHERSTRIP; PANEL TO JAMB
32	C00664.0001	#8 X 3/4 FHSMS
33	C09653.0000	#10 X 3/4 FHSMS
34	C00404.0000	1/4-20 LOCK NUT
35	C00417.0000	#14 X 1-1/2 HWSMS
36	C00449.0000	#10-24 X 1 FHMS
37	C03682.0006	DRIVE WHEEL ASSEMBLY
38	C03681.0001	IDLER WHEEL ASSEMBLY
39	C08151.0000	1/4-20 X 1 FHMS
40	C08150.0000	1/4-20 X 3/4 HHMB

ITEM #	HORTON PART NUMBER	DESCRIPTION
41	C00537.000R	CORNER BLOCK (SX TOP) (SX/O MUNTIN)
42	C09490.0001	CORNER BLOCK (O TOP)
43	C00536.0001	CORNER BLOCK (SX BOTTOM)
44	C09582.0002	CORNER BLOCK (O BOTTOM)
45	C00341.0001	VINYL GLAZING BULB - EXONMOBIL CHEMICAL SANTOPRENE EXTRUDED BY CENTRAL CHEMICAL INC.
46	C00289.0000	TRACK CAP
47	C00389.01FL	INTERLOCK SEAL SCHLEGEL #7595-6011-0
48	C01905.0000	STEEL TUBE (1-1/4" X 1-1/4" X 3/16" X 80.50") A-36
49	C00437.000AB	#10-24 X 1/2 FHSMS
50	C00353.0000	COVER; RECESS - JAMB
51	C00538.000R	BACKUP PLATE; CRS

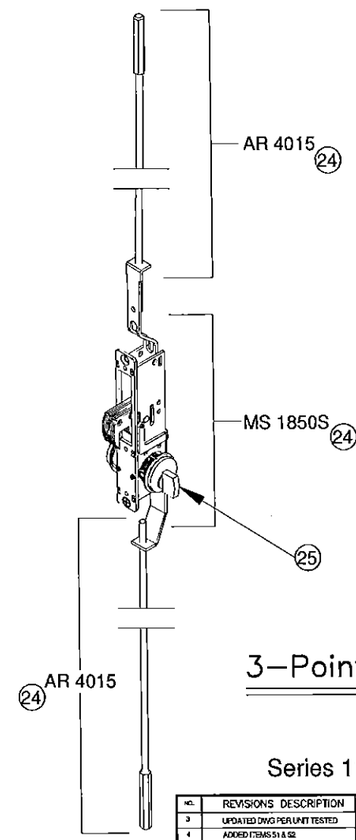

3–Point Lock

Series 110 Non-Impact

JOHN E. SCATES
3121 FAIRGATE DR.
CARROLLTON, TX 75007
FL PE 51737

John E Scates 9/1/15

JOHN E. SCATES LICENSE No. 51737 STATE OF FLORIDA PROFESSIONAL ENGINEER

PRODUCT REVISED
as complying with the Florida
Building Code
Acceptance No. IS-0922.09
Expiration Date 10/09/2023
By Ishwar J. Chandra
Miami-Dade Product Control

NO.	REVISIONS DESCRIPTION	DATE
3	UPDATED DWG PER UNIT TESTED	12/17/07
4	ADDED ITEMS 51 & 52	03/14/08
5	ADDED +/- 80 PSF RATING	03/20/08
6	REVISED PER METRO DADE ENGR.	05/27/08
7	REVISED PER METRO DADE ENGR.	07/15/08
8	REVISED SEALANT DETAILS	04/20/09
9	REVISED FOR NOA RENEWAL	05/13/13
10	REVISED FOR NOA	09/09/15

ARCHITECT:
CONTRACTOR:
SERIES: 2001/110 TYPE:
STILE: NARROW FINISH:
ACTUATION:

Bill of materials
Dwg. No. 110906

Horton AUTOMATICS
A DIVISION OF OVERHEAD DOOR CORP.
4242 BALDWIN BOULEVARD
CORPUS CHRISTI, TEXAS 78405-3399
361-888-3591 1-800-531-3111
FAX: 361-888-6510, 1-800-531-3108

JOB METRO–DADE
LOCATION:
DISTRIBUTOR:
DWN: LRod P.O. # SHEET 4 of 5
CHK: J.LACKEY DATE 11–07–08 REVISION 10

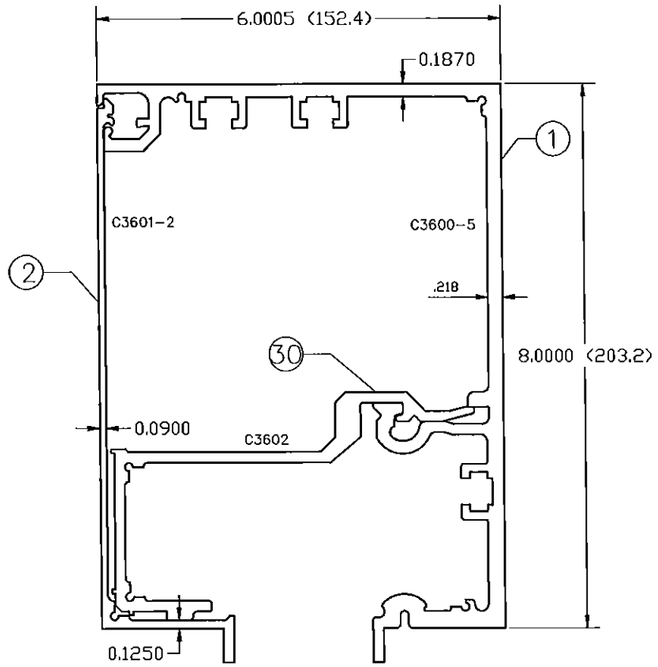

6" X 8"
(152.4) (203.2)
ASSEMBLED

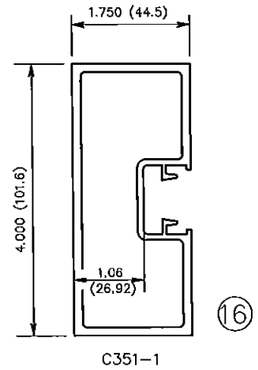

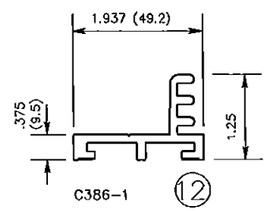

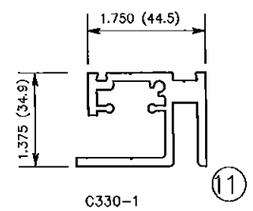

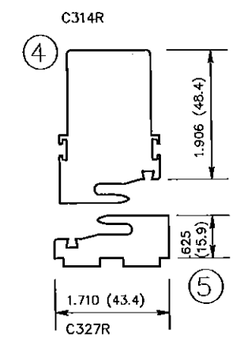

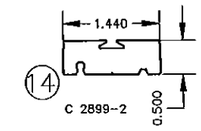

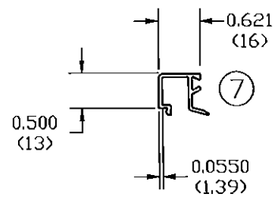

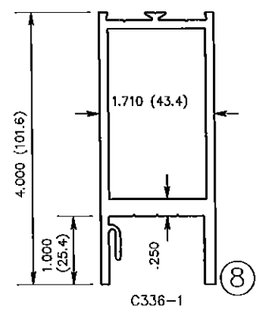

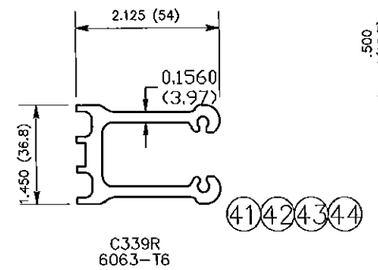

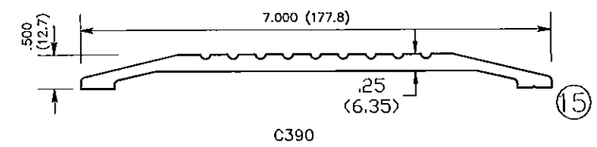

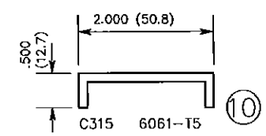

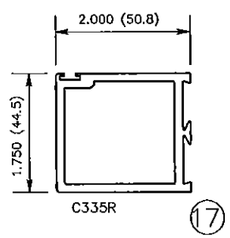

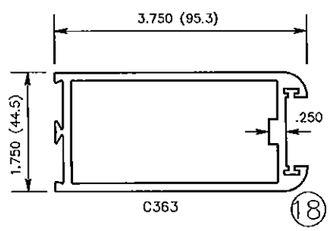

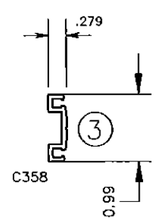

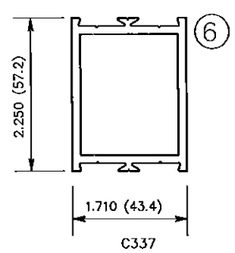

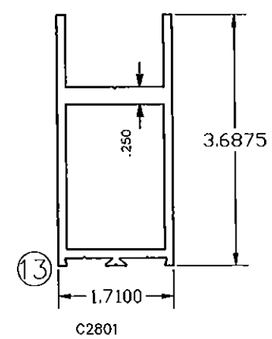

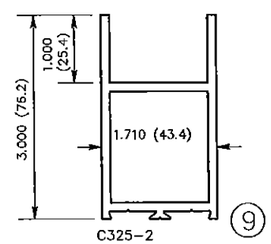

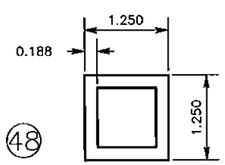

ASTM A-36 STEEL

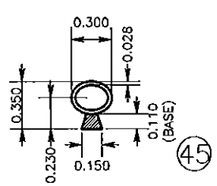

SCALE 2:1
C341-1
SANTOPRENE U.V. GRADE 121
BULB: SANTOPRENE 121-67W175
DUROMETER SHORE 67A
BASE: SANTOPRENE 101-87
DUROMETER SHORE 87A

ALL EXTRUSIONS ARE 6063-T5 UNLESS OTHERWISE NOTED & t min=1/8"

Series 110 Non-Impact Slide

JOHN E. SCATES
3121 FAIRGATE DR.
CARROLLTON, TX 75007
FL PE 51737

John Scates 9/11/15

JOHN E. SCATES LICENSE No. 51737 STATE OF FLORIDA PROFESSIONAL ENGINEER

PRODUCT REVISED
as complying with the Florida Building Code
Acceptance No. 15-0922.09
Expiration Date 10/09/2023
By Ishaq I. Chanda
Miami-Dade Product Control

NO.	REVISIONS DESCRIPTION	DATE
3	UPDATED DWG PER UNIT TESTED	12/17/07
4	ADDED ITEMS 51 & 52	03/14/08
5	ADDED +/- 80 PSF RATING	03/20/08
6	REVISED PER METRO DADE ENGR.	05/27/08
7	REVISED PER METRO DADE ENGR.	07/15/08
8	REVISED SEALANT DETAILS	04/23/09
9	REVISED FOR NOA RENEWAL	08/13/13
10	REVISED FOR NOA	09/09/15

ARCHITECT:
CONTRACTOR:
SERIES: 110 TYPE: "O-SX-SX-O"
STILE: NARROW FINISH:
ACTUATION:

Extrusion chart
Dwg. No. 110906

Horton AUTOMATICS
A DIVISION OF OVERHEAD DOOR CORP.
4242 BALDWIN BOULEVARD
CORPUS CHRISTI, TEXAS 78405-3399
361-888-5591 1-800-531-3111
FAX: 361-888-6510, 1-800-531-3108

JOB METRO-DADE
LOCATION:
DISTRIBUTOR:
DWN: LRod P.O. #
CHK: J.LACKEY DATE 11/07/06
SHEET 5 of 5
REVISION 10