MIAMI-DADE COUNTY
PRODUCT CONTROL SECTION
11805 SW 26 Street, Room 208
Miami, Florida 33175-2474
T (786) 315-2590 F (786) 315-2599
www.miamidade.gov/economy

DEPARTMENT OF REGULATORY AND ECONOMIC RESOURCES (RER)
BOARD AND CODE ADMINISTRATION DIVISION

NOTICE OF ACCEPTANCE (NOA)

Horton Automatics Division of Overhead Door
4242 Baldwin Boulevard
Corpus Christi, TX 78405

SCOPE:

This NOA is being issued under the applicable rules and regulations governing the use of construction materials. The documentation submitted has been reviewed and accepted by Miami-Dade County RER -Product Control Section to be used in Miami Dade County and other areas where allowed by the Authority Having Jurisdiction (AHJ).

This NOA shall not be valid after the expiration date stated below. The Miami-Dade County Product Control Section (In Miami Dade County) and/or the AHJ (in areas other than Miami Dade County) reserve the right to have this product or material tested for quality assurance purposes. If this product or material fails to perform in the accepted manner, the manufacturer will incur the expense of such testing and the AHJ may immediately revoke, modify, or suspend the use of such product or material within their jurisdiction. RER reserves the right to revoke this acceptance, if it is determined by Miami-Dade County Product Control Section that this product or material fails to meet the requirements of the applicable building code.

This product is approved as described herein, and has been designed to comply with the Florida Building Code, including the High Velocity Hurricane Zone.

DESCRIPTION: Series "110/310"(O-Sx-Sx-O/So-Sx-Sx-So) Aluminum Automatic Sliding Door w/ Breakout-N.I.

APPROVAL DOCUMENT: Drawing No. **040302-N Rev 2**, titled "Series 110/310 Non-Impact", sheets 1 through 8 of 8, prepared by manufacturer, dated 03/02/04 and last revised on 04/08/16, signed and sealed by John E. Scates, P.E., bearing the Miami-Dade County Product Control Revision stamp with the Notice of Acceptance number and expiration date by the Miami-Dade County Product Control Section.

MISSILE IMPACT RATING: None (Approved Hurricane protection Devices complying w/ FBC are required)

Limitations:

1. Series **110** (O-Sx-Sx-O) and Series **310** (So-Sx-Sx-So) w/Fixed Push bar & AR top/bottom Flush bolts w/MS18505 lock are rated at DP= +/- **55** PSF & max unit size 192"Wx104"H. The Series **310** (So-Sx-Sx-So) with AR **G-86** panic device is limited to DP = +/- **45** PSF & max unit size 168" WX 96H. Applicable O-Sx **or** So-Sx is qualified.
2. Not approved where water infiltration is required.
3. Electrical/ Electronic functions are not part of this approval and to be reviewed by appropriate Bldg. official.
4. Anchors referenced at Equal spacing must not exceed 12" unless otherwise noted.

LABELING: Each unit shall bear a permanent label with the manufacturer's name or logo, city, state and series and following statement: "Miami-Dade County Product Control Approved", noted herein.

RENEWAL of this NOA shall be considered after a renewal application has been filed and there has been no change in the applicable building code negatively affecting the performance of this product.

TERMINATION of this NOA will occur after the expiration date or if there has been a revision or change in the materials, use, and/or manufacture of the product or process. Misuse of this NOA as an endorsement of any product, for sales, advertising or any other purposes shall automatically terminate this NOA. Failure to comply with any section of this NOA shall be cause for termination and removal of NOA.

ADVERTISEMENT: The NOA number preceded by the words Miami-Dade County, Florida, and followed by the expiration date may be displayed in advertising literature. If any portion of the NOA is displayed, then it shall be done in its entirety.

INSPECTION: A copy of this entire NOA shall be provided to the user by the manufacturer or its distributors and shall be available for inspection at the job site at the request of the Building Official.

This NOA **revises & renews #14-0602.04**, consists of this page 1 & evidence pages E-1, as well as approval document mentioned above.

The submitted documentation was reviewed by **Ishaq I. Chanda, P.E.**

MIAMI-DADE COUNTY APPROVED

4/13/16

NOTICE OF ACCEPTANCE: EVIDENCE SUBMITTED

A. DRAWINGS

1. Manufacturer's die drawings and sections (Submitted under files below).
2. Drawing No. **040302-N Rev 2**, titled "Series 110/310 Non-Impact", sheets 1 through 8 of 8, prepared by manufacturer, dated 03/02/04 and last revised on 04/08/16, signed and sealed by John E. Scates, P.E.

B. TESTS (submitted under files #14-0602.04/#12-0801.06/# 09-0623.05)

1. Test reports on: 1) Air Infiltration Test, per FBC, TAS 202-94
   2) Uniform Static Air Pressure Test, Loading per FBC TAS 202-94
   3) Water Resistance Test, per FBC, TAS 202-94 (Not conducted)
   4) Forced Entry Test, per FBC 2411 3.2.1, TAS 202-94

along with installation diagram of aluminum automatic sliding glass doors, prepared by Hurricane Testing Laboratories, Test Report No(s). **HTL-0322-0611-03 (sp#4), HTL-0322-0611-03 (sp#1), HTL-0322-0119.04 (sp#1)** and **HTL-0322-0908-03 (sp#6)**, all signed and sealed dated 02/16/04 by Vinu J. Abraham, P.E.

C. CALCULATIONS

1. Anchor verification calculations and structural analysis complying w/ FBC 2014 (5th edition), dated 09/11/15, prepared, signed and sealed by John E. Scates, P.E.
2. Glazing complies w/ ASTME-1300-02, -04 & -09.

D. QUALITY ASSURANCE

1. Miami Dade Department of Regulatory and Economic Resources (RER).

E. MATERIAL CERTIFICATIONS

1. Technical data sheet for glazing bead item # 57, ExxonMobil Chemical's Santoprene™ 121-67W175 thermoplastic, extruded by Central Chemical Inc.

F. STATEMENTS

1. Statement letter of conformance to FBC 2014(5th Edition) & "No financial interest", dated SEP 11, 2015, signed & sealed by John E. Scates, P.E.
2. Lab compliance as part of the above referenced test report.

G. OTHER

1. This NOA **revises & renews #14-0602.04**, expiring on July 15, 2023.

Ishaq I. Chanda

Ishaq I. Chanda, P.E.
Product Control Examiner
NOA No. 15-0922.13
Expiration Date: July 15, 2023
Approval Date: April 14, 2016

Non-Impact

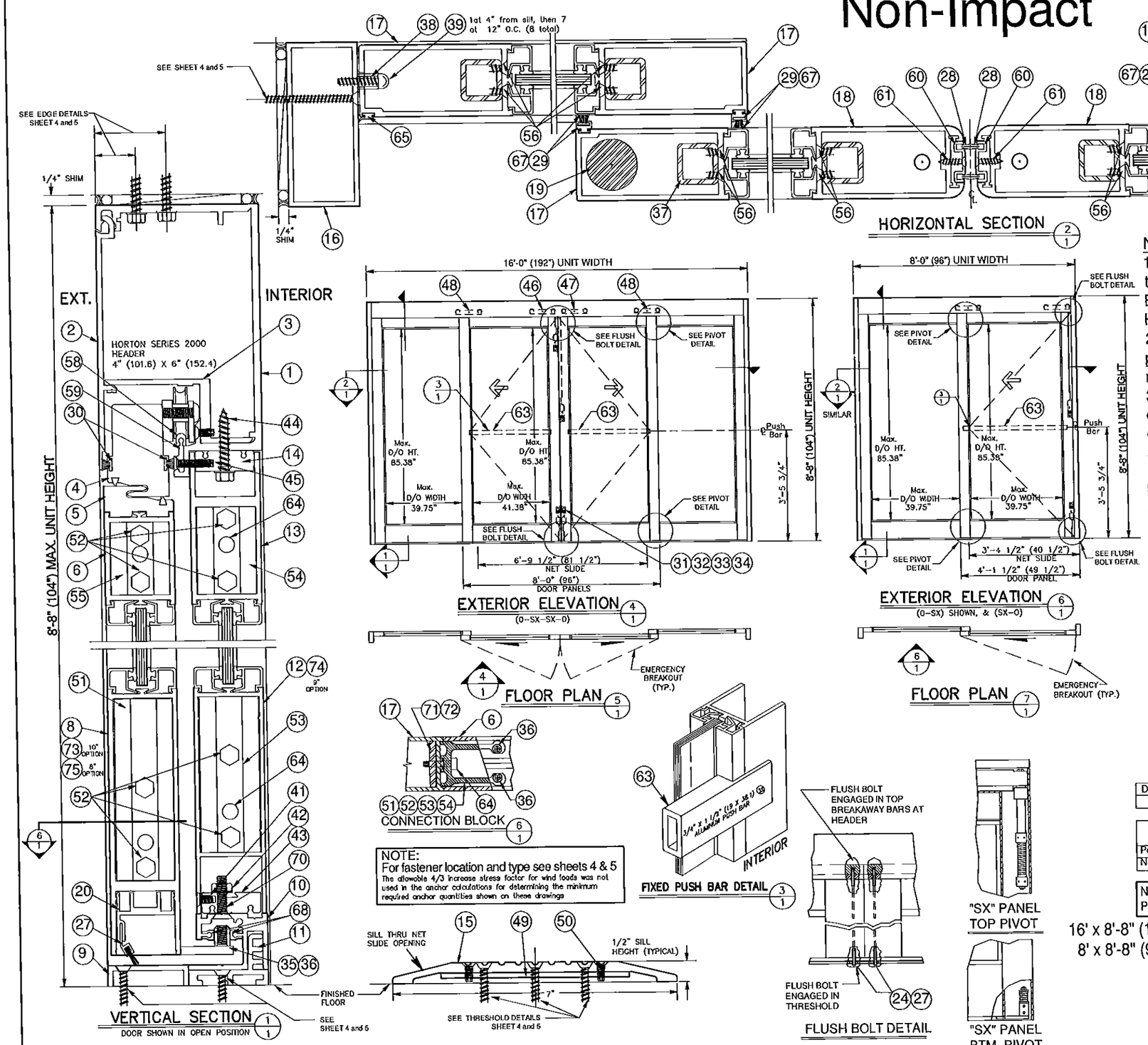

NOTES:

1. This product has been designed and tested to comply with the current Florida Building Code, including High Velocity Hurricane Zone (HVHZ).
2. Electrical/Electronic functions are not part of this approval and must be reviewed by appropriate building official.
3. See anchor installation details concerning types, substrate, edge distance, spacing and embedment on sheet 4 & 5.
4. 1x or 2x wood bucks by others must be secured properly to transfer loads using appropriate fasteners and quantities. Fasteners to secure wood buck must penetrate concrete or grouted CMU jamb substrate minimum 2.0" at head and sill.
5. Permit holder shall verify the adequacy of the existing structure to withstand additional imposed loads.
6. 1/4" max shim allowed. Type of shim to comply with Florida Building Code and be capable of resisting frame rotation.
7. All structural extrusions are 6063-T5 Aluminum with typical thickness of 1/8", unless otherwise specified.

Door Panel Sizes: (W x H)	"O" Panel	"SX" Panel
	41.88" x 82.19"	42.88" x 81.75"

	Where Water Infiltration Requirement is needed	Where Water Infiltration Requirement is NOT needed
Positive	Not Approved	± 55 PSF
Negative	Not Approved	± 55 PSF

NON-IMPACT RATED: APPROVED SHUTTERS or HURRICANE PROTECTION SYSTEM COMPLYING WITH FBC IS REQUIRED!

16' x 8'-8" (192"x104") (O-SX-SX-O) Series 110 Non Impact
8' x 8'-8" (96"x104") (O-SX , SX-O) Series 110 Non Impact

1/4" Tempered Glass. Glazed using aluminum snap-in glazing bead (0.500" x 0.621") on interior and exterior side of panel stiles and rails with a vinyl wedge between glass and glazing bead. Minimum glass bite 5/16".

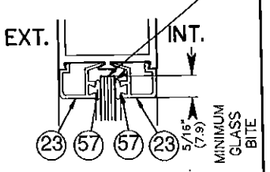

GLAZING DETAIL

JOHN E. SCATES
3121 FAIRGATE DR.
CARROLLTON, TX 75007
FL PE 51737

4/8/16

JOHN E. SCATES LICENSE No. 51737 STATE OF FLORIDA PROFESSIONAL ENGINEER

PRODUCT REVISED
as complying with the Florida building Code
Acceptance No. 15-0522.13
Expiration Date July 15, 2023
By
Miami Dade Product Control

NO.	REVISIONS DESCRIPTION	DATE
1	REVISED PER METRO DADE MARK-UPS	12/04/09
2	REVISED NOA DRAWINGS	09/03/15
3		
4		
5		
6		
7		
8		

ARCHITECT:
CONTRACTOR:
SERIES: 2000-110 TYPE: "O-SX-SX-O", "O-SX" & "SX-O"
STILE: MEDIUM FINISH:
ACTUATION:

Dwg. No. 040302-N

Horton AUTOMATICS
A DIVISION OF OVERHEAD DOOR CORP.
4242 BALDWIN BOULEVARD
CORPUS CHRISTI, TEXAS 78405-3399
361-888-5591 1-800-531-3111
FAX. 361-888-5510, 1-800-531-3108

JOB: METRO-DADE
LOCATION:
DISTRIBUTOR:
DWN: LRod P.O. # SHEET 1 of 8
CHK: J. LACKEY DATE 3-02-04 REVISION 2

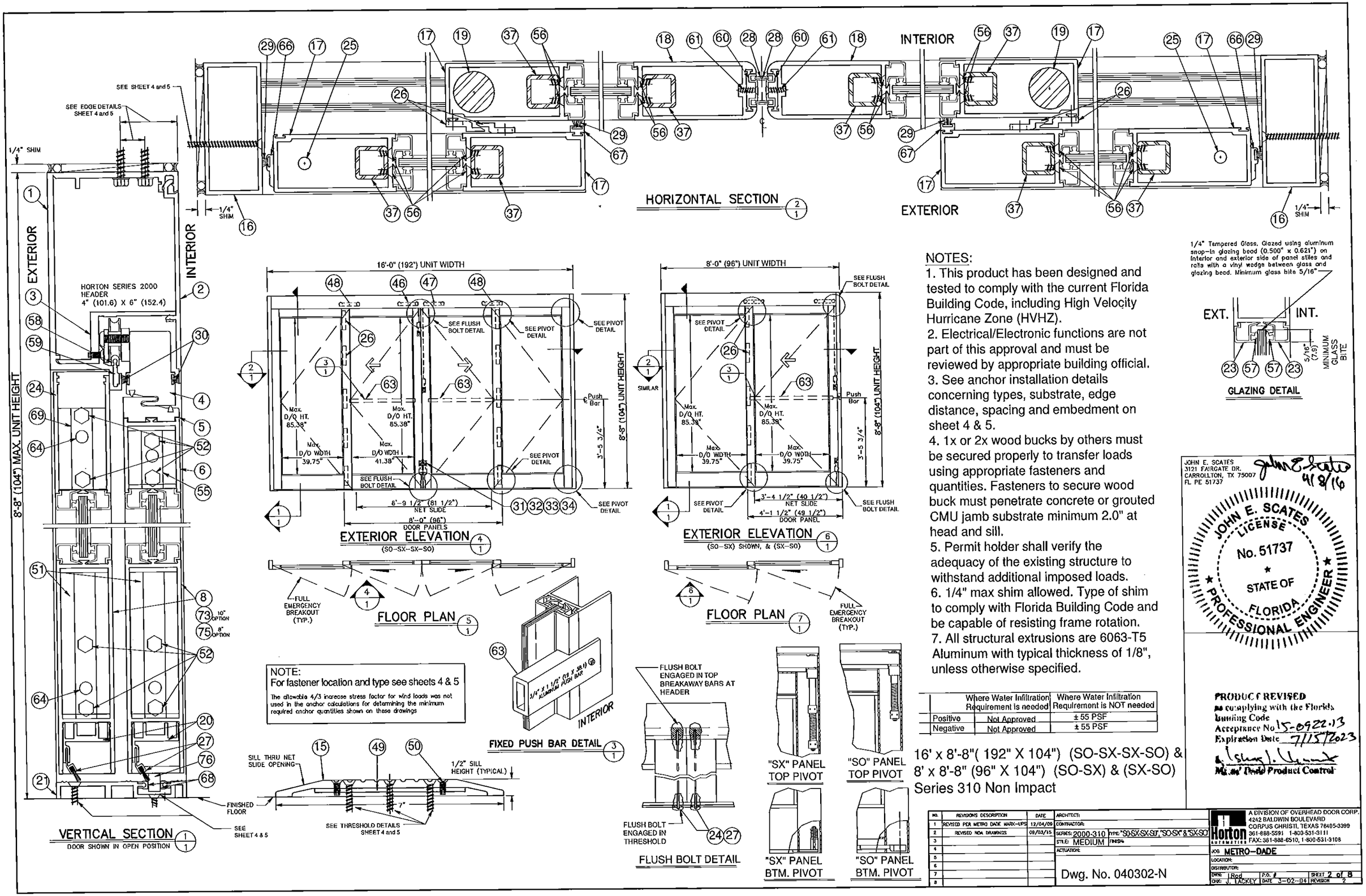

NOTES:

1. This product has been designed and tested to comply with the current Florida Building Code, including High Velocity Hurricane Zone (HVHZ).
2. Electrical/Electronic functions are not part of this approval and must be reviewed by appropriate building official.
3. See anchor installation details concerning types, substrate, edge distance, spacing and embedment on sheet 4 & 5.
4. 1x or 2x wood bucks by others must be secured properly to transfer loads using appropriate fasteners and quantities. Fasteners to secure wood buck must penetrate concrete or grouted CMU jamb substrate minimum 2.0" at head and sill.
5. Permit holder shall verify the adequacy of the existing structure to withstand additional imposed loads.
6. 1/4" max shim allowed. Type of shim to comply with Florida Building Code and be capable of resisting frame rotation.
7. All structural extrusions are 6063-T5 Aluminum with typical thickness of 1/8", unless otherwise specified.

	Where Water Infiltration Requirement is needed	Where Water Infiltration Requirement is NOT needed
Positive	Not Approved	± 55 PSF
Negative	Not Approved	± 55 PSF

16' x 8'-8"(192" X 104") (SO-SX-SX-SO) & 8' x 8'-8" (96" X 104") (SO-SX) & (SX-SO) Series 310 Non Impact

JOHN E. SCATES
3121 FAIRGATE DR.
CARROLLTON, TX 75007
FL PE 51737

JOHN E. SCATES 4/8/16

JOHN E. SCATES LICENSE No. 51737 STATE OF FLORIDA PROFESSIONAL ENGINEER

PRODUCT REVISED
as complying with the Florida Building Code
Acceptance No. 15-0922.13
Expiration Date 7/15/2023
Miami-Dade Product Control

No.	REVISIONS DESCRIPTION	DATE
1	REVISED PER METRO DADE MARX-UPS	12/04/09
2	REVISED NOA DRAWINGS	09/03/15
3		
4		
5		
6		
7		
8		

ARCHITECT:
CONTRACTOR:
SERIES: 2000-310 TYPE: "SO-SX-SX-SO", "SO-SX" & "SX-SO"
STILE: MEDIUM FINISH:
ACTUATION:

Dwg. No. 040302-N

Horton AUTOMATION
A DIVISION OF OVERHEAD DOOR CORP.
4242 BALDWIN BOULEVARD
CORPUS CHRISTI, TEXAS 78405-3399
361-888-5591 1-800-531-3111
FAX: 361-888-6510, 1-800-531-3108

JOB: METRO-DADE
LOCATION:
DISTRIBUTOR:
DWN: Rod P.O. # SHEET 2 of 8
CHK: J. LACKEY DATE 3-02-04 REVISION 2

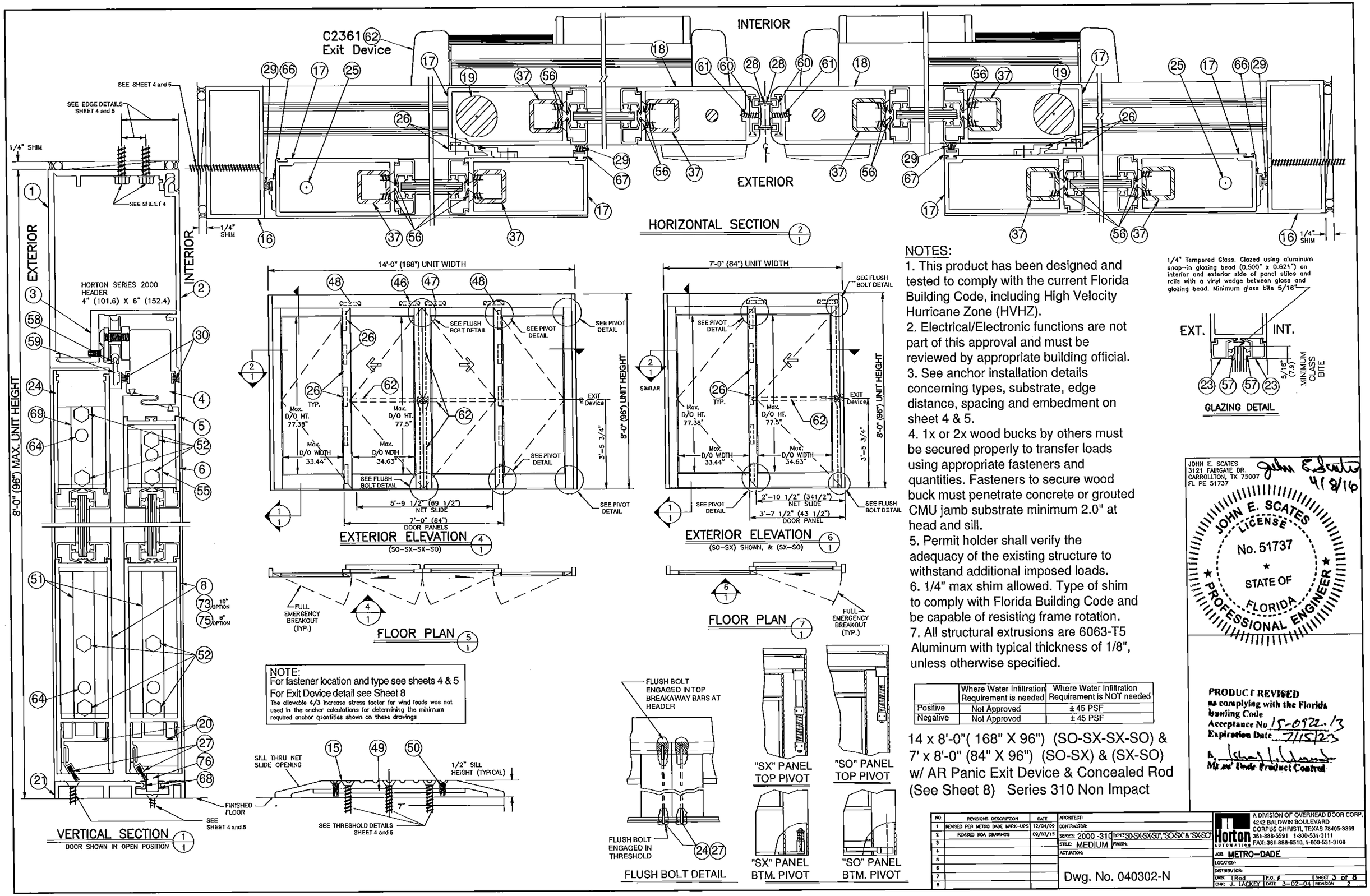

NOTE:
For fastener location and type see sheets 4 & 5
For Exit Device detail see Sheet 8
The allowable 4/3 increase stress factor for wind loads was not used in the anchor calculations for determining the minimum required anchor quantities shown on these drawings

NOTES:

1. This product has been designed and tested to comply with the current Florida Building Code, including High Velocity Hurricane Zone (HVHZ).
2. Electrical/Electronic functions are not part of this approval and must be reviewed by appropriate building official.
3. See anchor installation details concerning types, substrate, edge distance, spacing and embedment on sheet 4 & 5.
4. 1x or 2x wood bucks by others must be secured properly to transfer loads using appropriate fasteners and quantities. Fasteners to secure wood buck must penetrate concrete or grouted CMU jamb substrate minimum 2.0" at head and sill.
5. Permit holder shall verify the adequacy of the existing structure to withstand additional imposed loads.
6. 1/4" max shim allowed. Type of shim to comply with Florida Building Code and be capable of resisting frame rotation.
7. All structural extrusions are 6063-T5 Aluminum with typical thickness of 1/8", unless otherwise specified.

	Where Water Infiltration Requirement is needed	Where Water Infiltration Requirement is NOT needed
Positive	Not Approved	± 45 PSF
Negative	Not Approved	± 45 PSF

14 x 8'-0"(168" X 96") (SO-SX-SX-SO) &
7' x 8'-0" (84" X 96") (SO-SX) & (SX-SO)
w/ AR Panic Exit Device & Concealed Rod
(See Sheet 8) Series 310 Non Impact

1/4" Tempered Glass. Glazed using aluminum snap-in glazing bead (0.500" x 0.621") on interior and exterior side of panel stiles and rails with a vinyl wedge between glass and glazing bead. Minimum glass bite 5/16"

EXT. INT. 5/16" (7.9) MINIMUM GLASS BITE

GLAZING DETAIL

JOHN E. SCATES
3121 FAIRGATE DR.
CARROLLTON, TX 75007
FL PE 51737

John E Scates 4/8/16

JOHN E. SCATES LICENSE No. 51737 STATE OF FLORIDA PROFESSIONAL ENGINEER

PRODUCT REVISED
as complying with the Florida Building Code
Acceptance No. 15-0922.13
Expiration Date 7/15/23
Miami-Dade Product Control

NO.	REVISIONS DESCRIPTION	DATE
1	REVISED PER METRO DADE MARK-UPS	12/04/09
2	REVISED HOA DRAWINGS	09/03/15
3		
4		
5		
6		
7		
8		

ARCHITECT:
CONTRACTOR:
SERIES: 2000 -310 TYPE: "SO-SX-SX-SO", "SO-SX" & "SX-SO"
STILE: MEDIUM FINISH:
ACTUATION:

Dwg. No. 040302-N

Horton AUTOMATICS
A DIVISION OF OVERHEAD DOOR CORP.
4242 BALDWIN BOULEVARD
CORPUS CHRISTI, TEXAS 78405-3399
361-888-5591 1-800-531-3111
FAX: 361-888-6510, 1-800-531-3108

JOB METRO-DADE
LOCATION:
DISTRIBUTOR:
DWN: TRod P.O. #
SHEET 3 of 8
CHK: J. LACKEY DATE 3-02-04 REVISION 2

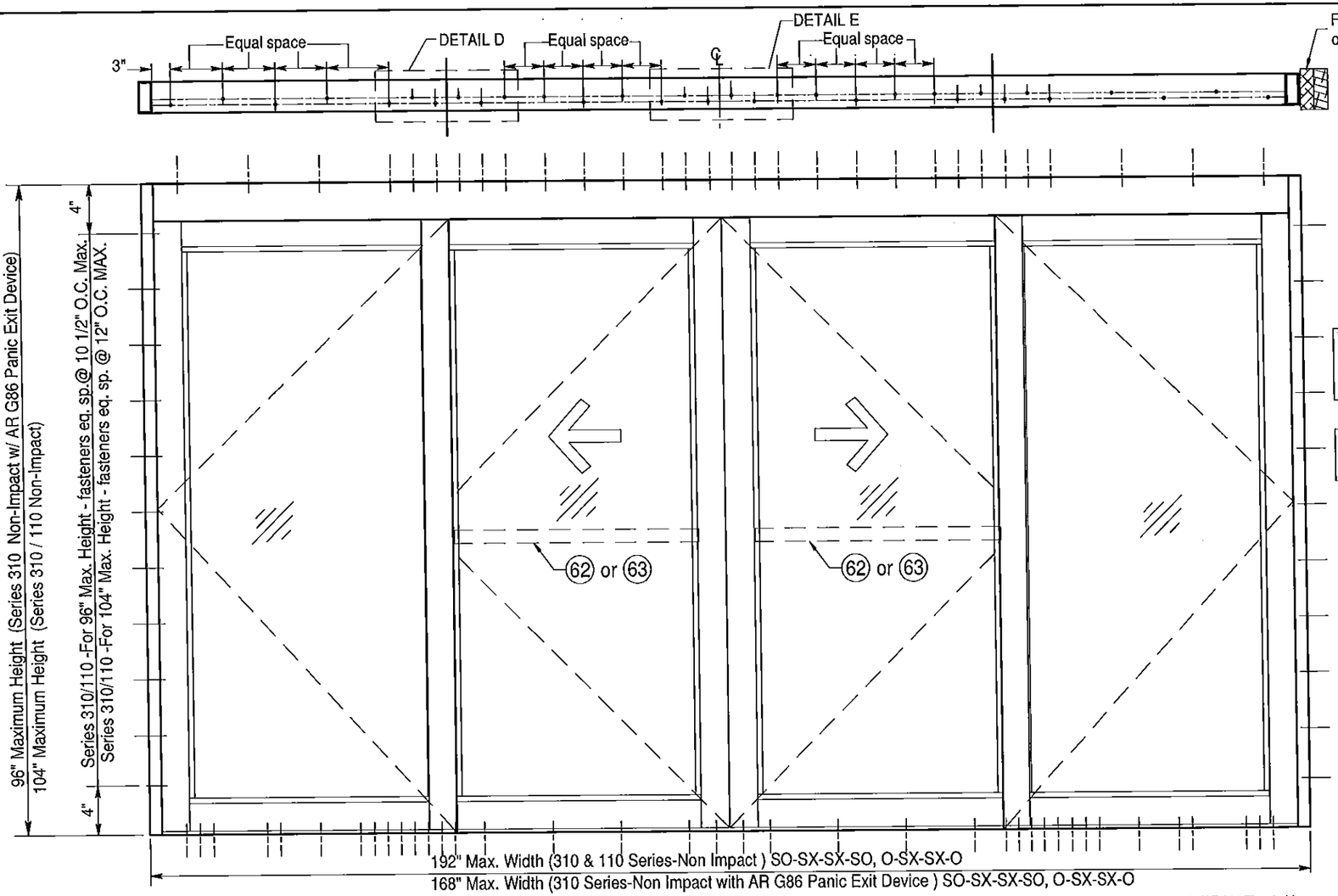

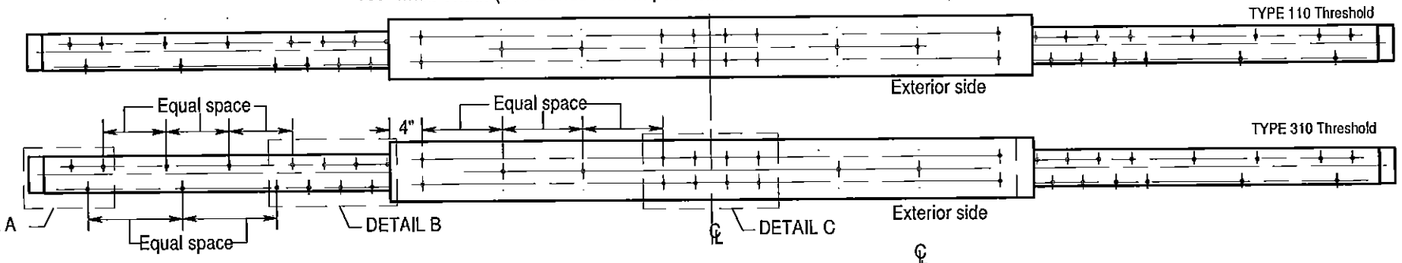

NOTE
Fastener spacing is the same for 110 & 310 except as noted

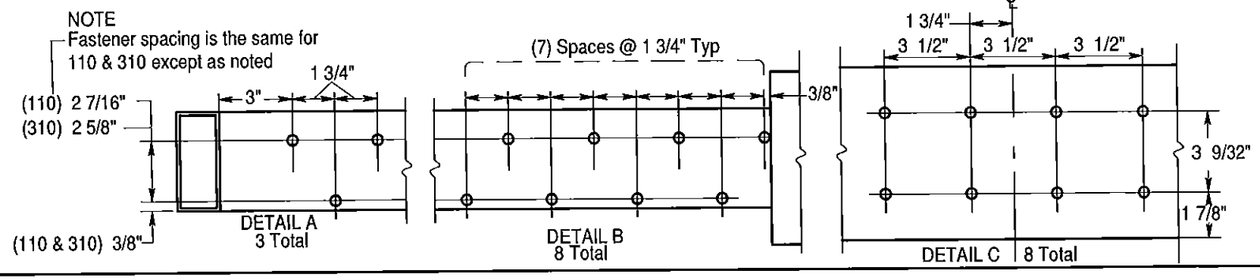

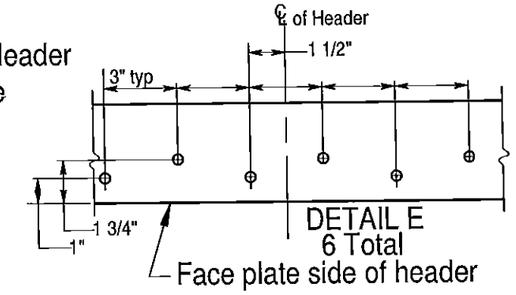

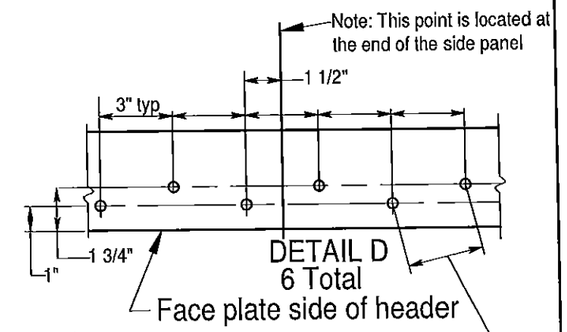

The frame must be shimmed with a type of shim complying with the Florida Building Code and is capable of resisting the frame's rotation-1/4" thk. Max

The 4/3 Increase stress factor for wind loads was not used in the anchor calculations.

HEADER

Steel (0.125" Thick, Fy=36 KSI)– INTERCORP #14 Steel HWH Self–Drilling Screw, 0.625" Min. Edge Distance (Full Thread Engagement)

Aluminum(0.125" Thick Min./6063–T5)– 1/4"–14 HWH Sheetmetal Screw, 1" Min. Edge Distance. (Full Thread Engagement)

JAMBS

Steel (0.125" Thick, Fy=36 KSI)– ITW TEKS SCREW #14–20, FH w/WINGS Self–Drilling Screw 0.625" Minimum Edge Distance

Concrete(3350 PSI)– Crete–Flex SS4 1/4" FH Concrete Screw/Anchor, 1.75" Embed, 2.5" Min. Edge Distance

Masonry(Solid CMU Block)– Crete–Flex SS4 1/4" FH Concrete Screw/Anchor, 1.25" Embed, 2.5" Min. Edge Distance

Aluminum(0.125" Thick Minimum/6063–T5)– 1/4"–14 FH Sheetmetal Screw, 1" Min. Edge Distance.

Wood(#2 SYP)–1/4" x 4" Long Lag Bolt 2.75"Minimum Penetration, 1" Minimum Edge Distance (2) 2 X 8 W/ Min G = .55

THRESHOLD

Steel (0.125" Thick, Fy=36 KSI)– ITW TEKS SCREW #14–20 PFH w/Wings Self–Drilling Screw, 0.625" Minimum Edge Distance (Full Thread Engagement)

Concrete(3350 PSI)– Crete–Flex SS4 FH 1/4" Concrete Screw 1.75" Embed, 2.5" Minimum Edge Distance

Aluminum(0.125" Thick Minimum/6063–T5)– 1/4"–14 FH Sheetmetal Screw, 1" Minimum Edge Distance (Full Thread Engagement)

2001 110 & 310 Bi-Parts Fastener Locations

JOHN E. SCATES
3121 FAIRGATE DR.
CARROLLTON, TX 75007
FL PE 51737

John E Scates 4/8/16

JOHN E. SCATES LICENSE No. 51737 STATE OF FLORIDA PROFESSIONAL ENGINEER

PRODUCT REVISED
as complying with the Florida Building Code
Acceptance No. 15-6922.13
Expiration Date 7/15/23
Miami-Dade Product Control

NO.	REVISIONS DESCRIPTION	DATE
1	REVISED PER METRO DADE	12/04/09
2	REVISED NOA DRAWINGS	09/03/15
3		
4		
5		
6		
7		
8		

ARCHITECT:
CONTRACTOR:
SERIES 2000-110/310 TYPE: "S0-SX-SX-S0","0-SX-SX-0"
STILE: MEDIUM FINISH:
ACTUATION:

Bi-Part Fastener Locations
Dwg. No. 040302-N

Horton AUTOMATICS
A DIVISION OF OVERHEAD DOOR CORP.
4242 BALDWIN BOULEVARD
CORPUS CHRISTI, TEXAS 78405-3399
361-888-5591 1-800-531-3111
FAX: 361-888-6510, 1-800-531-3108

JOB METRO–DADE
LOCATION:
DISTRIBUTOR:
DWN: LRod P.O. # SHEET 4 of 8
CHK: J. TACKEY DATE 3–02–04 REVISION 2

TYPE 110 & 310 Header
(Refer to Faceplate Location)

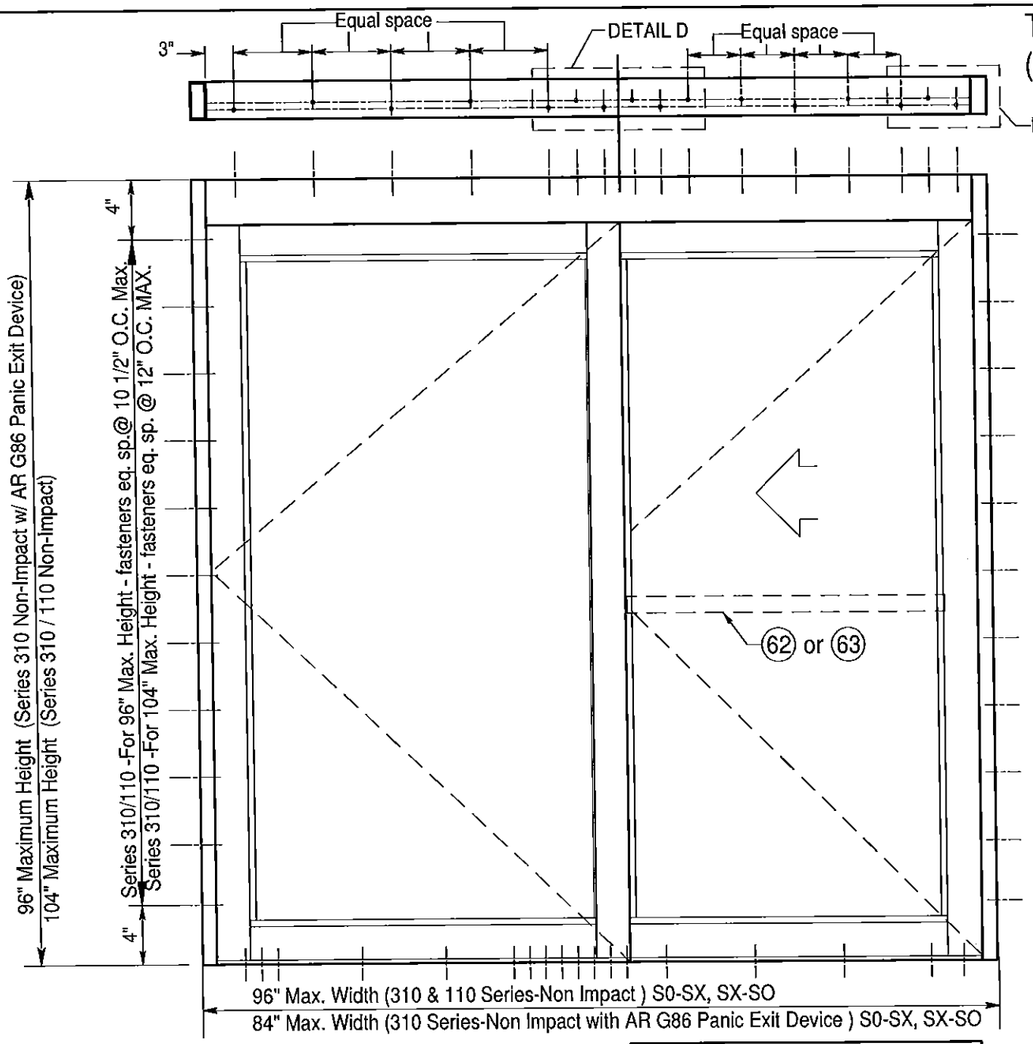

HEADER

Steel (0.125" Thick, Fy=36 KSI) – INTERCORP #14 Steel HWH Self-Drilling Screw, 0.625" Min. Edge Distance (Full Thread Engagement)

Aluminum(0.125" Thick Min./6063-T5) – 1/4"-14 HWH Sheetmetal Screw, 1" Min. Edge Distance. (Full Thread Engagement)

JAMBS

Steel (0.125" Thick, Fy=36 KSI) –ITW TEKS SCREW #14-20, FH w/WINGS Self-Drilling Screw 0.625" Minimum Edge Distance

Concrete(3350 PSI) – Crete-Flex SS4 1/4" FH Concrete Screw/Anchor, 1.75" Embed, 2.5" Min. Edge Distance

Masonry(Solid CMU Block) – Crete-Flex SS4 1/4" FH Concrete Screw/Anchor, 1.25" Embed, 2.5" Min. Edge Distance

Aluminum(0.125" Thick Minimum/6063-T5) – 1/4"-14 FH Sheetmetal Screw, 1" Min. Edge Distance.

Wood(#2 SYP)-1/4" x 4" Long Lag Bolt 2.75"Minimum Penetration, 1" Minimum Edge Distance (2) 2 X 8 W/ Min G = .55

THRESHOLD

Steel (0.125" Thick, Fy=36 KSI)– ITW TEKS SCREW #14-20 PFH w/Wings Self-Drilling Screw, 0.625" Minimum Edge Distance (Full Thread Engagement)

Concrete(3350 PSI)– Crete-Flex SS4 FH 1/4" Concrete Screw 1.75" Embed, 2.5" Minimum Edge Distance

Aluminum(0.125" Thick Minimum/6063-T5) – 1/4"-14 FH Sheetmetal Screw, 1" Minimum Edge Distance (Full Thread Engagement)

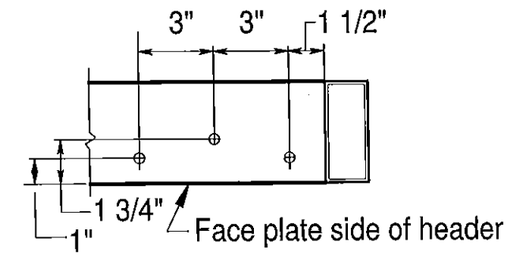

DETAIL E
6 Total

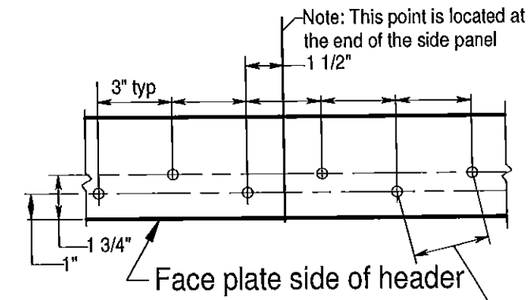

DETAIL D
6 Total

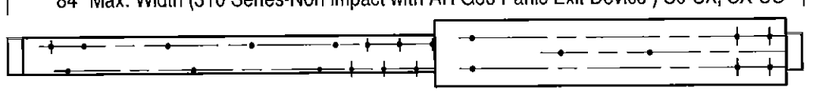

TYPE 110 Threshold

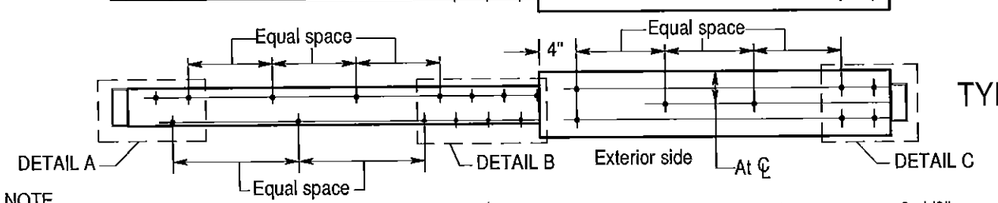

TYPE 310 Threshold

NOTE
Fastener spacing is the same for 110 & 310 except as noted

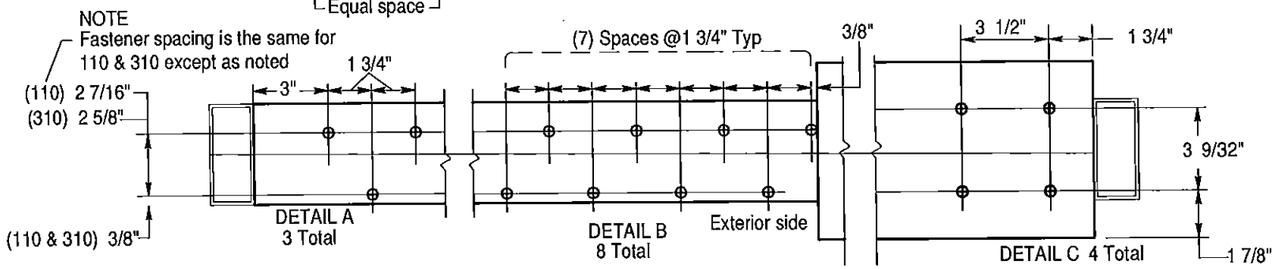

The frame must be shimmed with a type of shim complying with the Florida Building Code and is capable of resisting the frame's rotation-1/4" thk. Max

The 4/3 increase stress factor for wind loads was not used in the anchor calculations.

JOHN E. SCATES
3121 FAIRGATE DR.
CARROLLTON, TX 75007
FL PE 51737

John E Scates 4/8/16

JOHN E. SCATES LICENSE No. 51737 STATE OF FLORIDA PROFESSIONAL ENGINEER

PRODUCT REVISED
as complying with the Florida Building Code
Acceptance No. 15-0922.13
Expiration Date 7/15/23
By Ishwar L. Unwala
Miami-Dade Product Control

2001 110 & 310 Single Slides
FASTENER LOCATIONS

NO.	REVISIONS DESCRIPTION	DATE
1	REVISED PER METRO DADE	12/04/09
2	REVISED FOR NOA	09/09/15
3		
4		
5		
6		
7		
8		

ARCHITECT:
CONTRACTOR:
SERIES 2000-110/310 TYPE "S0-SX, SX-SO
STILE: MEDIUM FINISH –
ACTUATION:

Single Slide Fastener Locations
Dwg. No. 040302-N

Horton AUTOMATICS
A DIVISION OF OVERHEAD DOOR CORP
4242 BALDWIN BOULEVARD
CORPUS CHRISTI, TEXAS 78405-3399
361-888-5591 1-800-531-3111
FAX: 361-888-6510, 1-800-531-3108

JOB METRO-DADE
LOCATION:
DISTRIBUTOR:
DWN: LRod | P.O. # | SHEET 5 of 8
CHK: J.LACKEY | DATE 03--02--04 | REVISION 2

ITEM #	HORTON PART NUMBER	DESCRIPTION
1	C00265.000R	ALUMINUM EXTRUSION: HEADER
2	C00266.000R	ALUMINUM EXTRUSION:FACEPLATE
3	C00264.000R	ALUMINUM EXTRUSION:TRAY
4	C00314.000R	ALUMINUM EXTRUSION:INTERLOCK TOP
5	C00327.000R	ALUMINUM EXTRUSION:INTERLOCK LOWER
6	C00337.000R	ALUMINUM EXTRUSION:TOP RAIL
7	C00370.0001	ALUMINUM EXTRUSION:GLASS STOP
8	C00283.0000	ALUMINUM EXTRUSION:BOTTOM RAIL
9	C00315.0000	ALUMINUM EXTRUSION:TRACK FILLER
10	C00330.0001	ALUMINUM EXTRUSION: BOTTOM GUIDE
11	C00386.0001	ALUMINUM EXTRUSION: ADAPTOR
12	C00342.04FL	ALUMINUM EXTRUSION: BOTTOM RAIL
13	C02801.000AB	ALUMINUM EXTRUSION: HORIZONTAL RAIL
14	C02899.0002	ALUMINUM EXTRUSION: CORNER BLOCK (used as reinforcement)
15	C00390.0000	ALUMINUM EXTRUSION: THRESHOLD 7"
16	C00300.000AB	ALUMINUM EXTRUSION: JAMB TUBE 4" X 1-3/4"
17	C00323.0000	ALUMINUM EXTRUSION: VERTICAL RAIL
18	C00363.0000	ALUMINUM EXTRUSION: VERTICAL RAIL
19	C00818.000R	BAR TORSION (serves as slide panel top pivot)
20	C02798.0001	ALUMINUM EXTRUSION: ADAPTOR
21	C02873.0000	THRESHOLD
22	C00379.001ABC	GLASS STOP
23	C00338.000R	GLASS STOP
24	C00343.001R	ALUMINUM EXTRUSION; HORIZONTAL RAIL
25	C00589.0000	PIVOT
26	C00888.002AB	CLIP INTERLOCK
27	C00524.00FL	WEATHERSEAL BRUSH Felton #490621
28	C00350.0000	NOSING SEAL SCHLEGEL #1104-5101
29	C00397.0000	INTERLOCK SEAL SHCLEGEL #7595-6011-0
30	C00293.0000	WEATHERSEAL BRUSH Schlegel #8430-5016-7
31	C00454.0000	LOCK, MAX SECURITY AR MS1850S
32	C00463.0000	THUMBTURN AR 4066
33	C00487.0000	ADAMS RITE 4089 ROD ASSEMBLY
34	C00883.0000	3/8" HEX BOLT AR 4015 EXTENDING INTO HEAD AND SILL 1/2"
35	C00843.01FL	BOTTOM GUIDE DOOR MOUNTED
36	C00844.01FL	BOTTOM GUIDE DOOR MOUNTED
37	C01987.0000	STEEL TUBE A-500 1" X 1 " X 1/8" (FULL LENGTH PANEL STILES)
38	C00426.0001	5/16 SPACER
39	C00453.0000	#10 X 5/8 PHSMS
40	C00450.0000	#10 X 1-1/2 FHSMS
41	C00437.0000	#10-24 X 1/2" FHMS EVERY 12" IN SIDELITES
42	C00404.0000	1/4-20 LOCKNUT
43	C02899.0002	ALUMINUM EXTRUSION: CORNER BLOCK (used as reinforcement)
44	C00417.0000	#14 X 1-1/2 HWSMS EVERY 12" IN SIDELITES
45	C07141.0000	#10-24 X 1" FHMS EVERY 12" IN SIDELITES
46	C02130.01FL	DRIVE WHEEL ASSEMBLY
47	C00815.0RFL	WHEEL ASSEMBLY
48	C00817.00FL	IDLER WHEEL ASSEMBLY
49	C00448.0000	PLATE, 4-5/8" X 8" X 1/8" ALUMINUM LOCATED UNDER THRESHOLD AT LOCK BOLTS
50	C00437.0000	#10-24 X 1/2" FHMS, 4 IN EACH PLATE ITEM 49
51	C00693.0003	CORNER BLOCK
52	C08150.0000	1/4-20 X 3/4 HHMB
53	C00536.0004	CORNER BLOCK
54	C09490.0001	CORNER BLOCK
55	C01044.0001	CORNER BLOCK
56	C00437.0000	#10-24 X 1/2" FHMS
57	C00341.0001	GLAZING BEAD
58	C00291.0001	TRACK CAP
59	C00380.0001	TRACK
60	C00358.000R	ALUMINUM EXTRUSION: ASTRAGAL
61	C00664.001AB	#8 X 3/4 FHSMS
62	C02361.0000	PANIC EXIT DEVICE ADAM'S RITE G86H W/ CONCEALED ROD
63	C00278.001ABC	FIXED PUSHBAR; ALUMINUM TUBE
64	C09719.0000	ALL THREAD 3/8-16
65	C00371.000R	WEATHERSTRIP; PANEL TO JAMB
66	C00398.0000	ALUMINUM EXTRUSION; MOHAIR ADAPTOR
67	C00389.00FL	INTERLOCK SEAL SHCLEGEL #7595-6011-0
68	C00289.0000	TRACK CAP
69	C00536.0003	CORNER BLOCK
70	C08141.0000	1/4-20 X 1" FHMS
71	C01046.0000	BACKUP PLATE
72	C00538.000R	BACKUP PLATE
73	C02966.0002/C06967.0002	ALUMINUM EXTRUSION; BOTTOM RAIL 10"
74	C00342.005AB	ALUMINUM EXTRUSION; BOTTOM RAIL 9"
75	C02797.000AB	ALUMINUM EXTRUSION; BOTTOM RAIL 8"
76	C00852.0004	BOTTOM GUIDE DOOR MOUNTED

WEATHERSEALS:
C389-FL INTERLOCK SEAL SCHLEGEL CORP. FINSEAL #7595-6011-0
C350 NOSING SEAL SCHLEGEL CORP. SKIRTING SEAL#1104-5101
C524-FL SLIDE PANEL BOTTOM SEAL FELTON NYLON BRISTLE #490621
C293 SLIDE PANEL TOP SEAL SCHLEGEL #8430-5016-7

HARDWARE:
C454 MAX SECURITY LOCK ADAMS-RITE #MS1850S-250-628
C463 THUMBTURN ADAMS-RITE #4066
C487 EXIT INDICATOR ADAMS-RITE #4089
C883 THRESHOLD BOLT ADAMS-RITE #4015
C815-RFL, C817-FL, C2130-1FL SLIDE TOP ROLLER ASSEMBLIES
C843-1FL & C844-1FL BOTTOM GUIDES

JOHN E. SCATES
3121 FAIRGATE DR.
CARROLLTON, TX 75007
FL PE 51737

John E Scates 4/9/16

JOHN E. SCATES LICENSE No. 51737 STATE OF FLORIDA PROFESSIONAL ENGINEER

PRODUCT REVISED
as complying with the Florida building Code
Acceptance No. 15-0723.13
Expiration Date 7/13/23
Miami Dade Product Control

2000 Header - Series 110 & 310 Non-Impact

NO.	REVISIONS DESCRIPTION	DATE
1	REVISED PER METRO DADE MARK-UPS	12/04/09
2	REVISED NOA DRAWINGS	09/02/15
3		
4		
5		
6		
7		
8		

ARCHITECT:
CONTRACTOR:
SERIES: TYPE:
STILE: MEDIUM FINISH:
ACTUATION:

Bill of Materials
Dwg. No. 040302-N

Horton AUTOMATICS
A DIVISION OF OVERHEAD DOOR CORP.
4242 BALDWIN BOULEVARD
CORPUS CHRISTI, TEXAS 78405-3399
361-888-5591 1-800-531-3111
FAX: 361-888-6510, 1-800-531-3108

JOB METRO-DADE
LOCATION:
DISTRIBUTOR:
DWN: LRod P.O. # SHEET 6 of 8
CHK: J. LACKEY DATE 03-02-04 REVISION 2

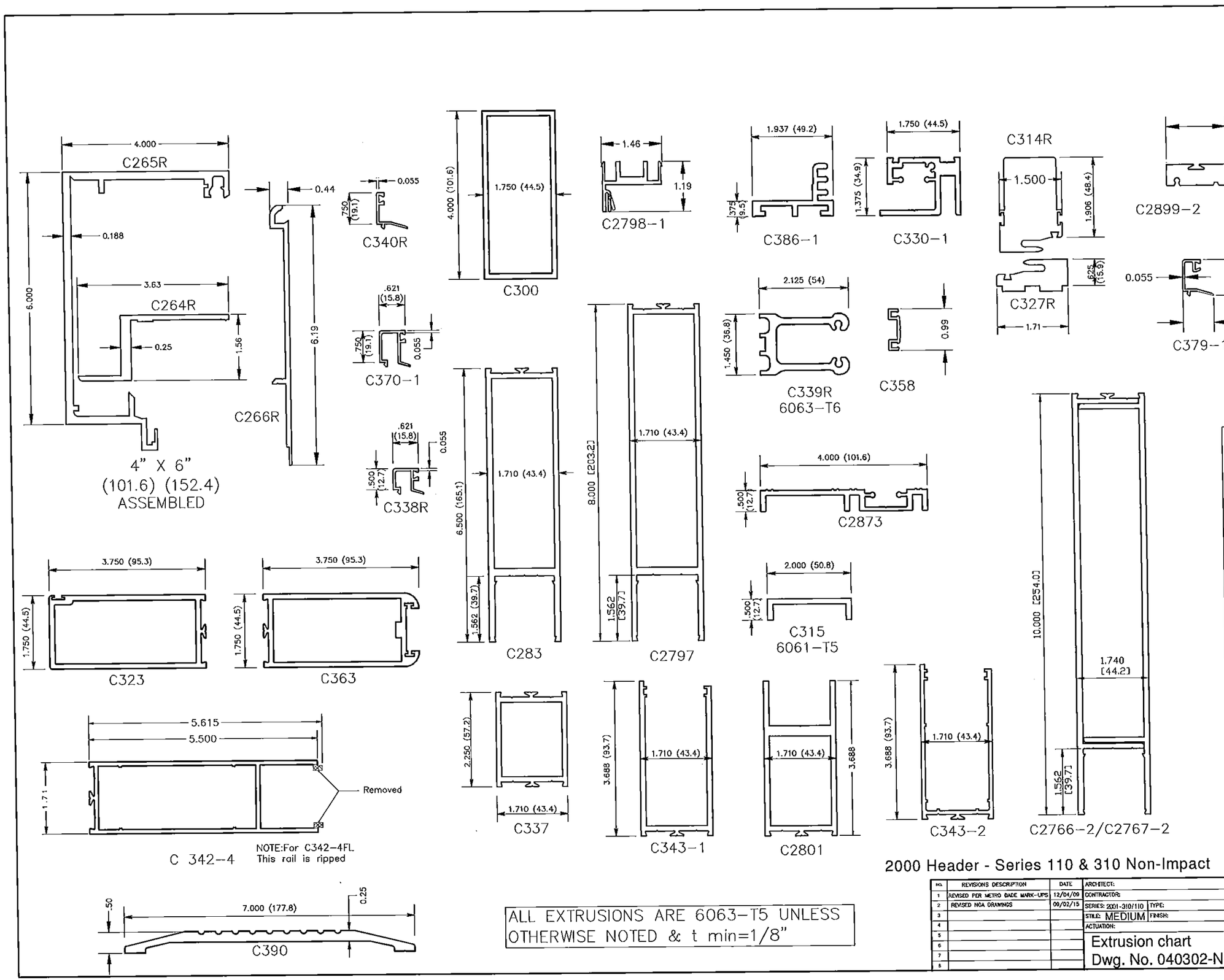

2000 Header - Series 110 & 310 Non-Impact

ALL EXTRUSIONS ARE 6063-T5 UNLESS OTHERWISE NOTED & t min=1/8"

JOHN E. SCATES
3121 FAIRGATE DR.
CARROLLTON, TX 75007
FL PE 51737

John E. Scates 4/8/16

JOHN E. SCATES
LICENSE
No. 51737
STATE OF
FLORIDA
PROFESSIONAL ENGINEER

PRODUCT REVISED
as complying with the Florida
Building Code
Acceptance No. 15-0922.13
Expiration Date 7/15/23
By Miami-Dade Product Control

NO.	REVISIONS DESCRIPTION	DATE
1	REVISED PER METRO DADE MARK-UPS	12/04/09
2	REVISED NOA DRAWINGS	09/02/15
3		
4		
5		
6		
7		
8		

ARCHITECT:
CONTRACTOR:
SERIES: 2001-310/110 TYPE:
STILE: MEDIUM FINISH:
ACTUATION:

Extrusion chart
Dwg. No. 040302-N

Horton AUTOMATICS
A DIVISION OF OVERHEAD DOOR CORP.
4242 BALDWIN BOULEVARD
CORPUS CHRISTI, TEXAS 78405-3399
361-888-5591 1-800-531-3111
FAX: 361-888-6510, 1-800-531-3108

JOB METRO-DADE
LOCATION:
DISTRIBUTOR:
DWN: LRod P.O. #
CHK: J. LACKEY DATE 3-02-04
SHEET 7 of 8
REVISION 2

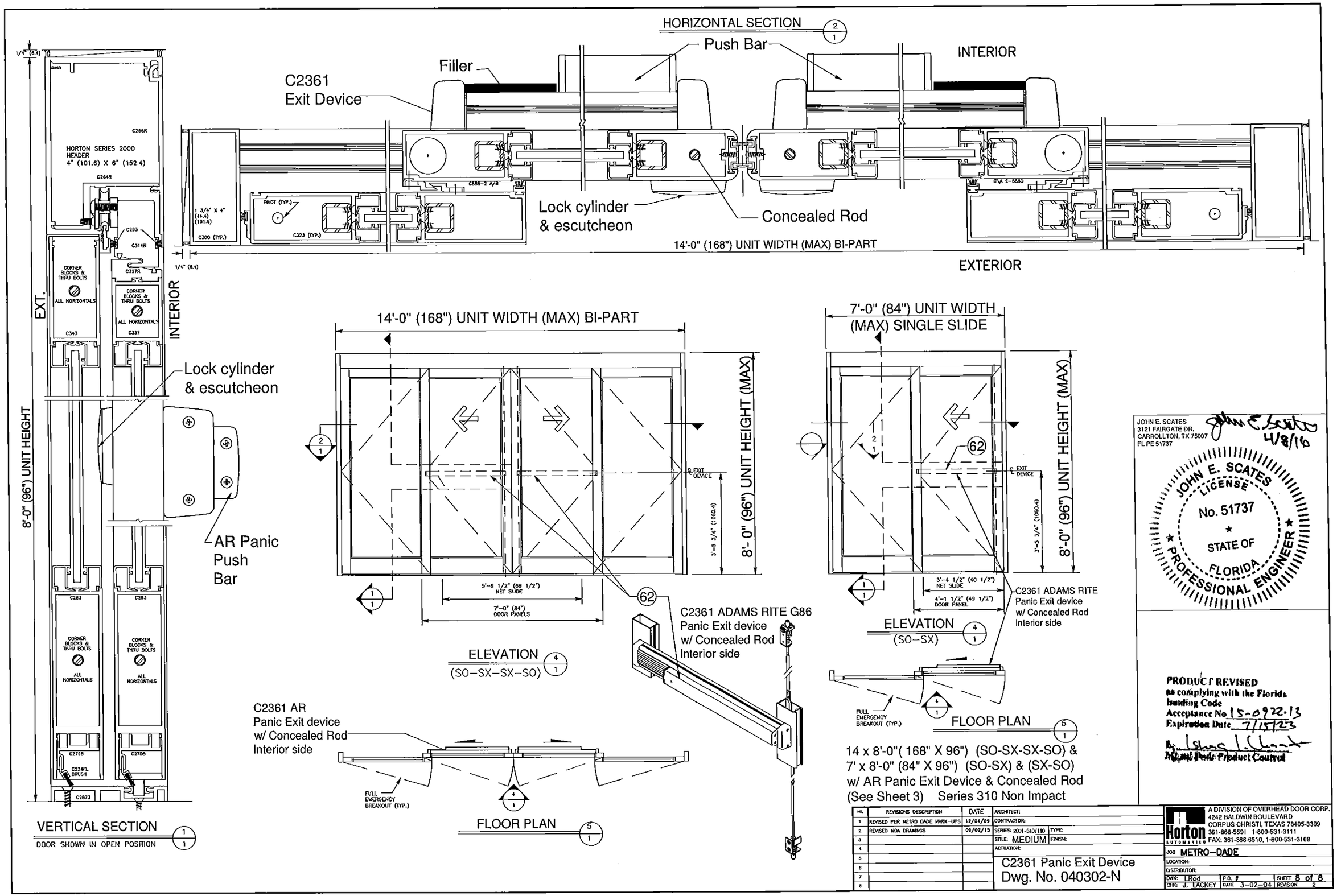
HORIZONTAL SECTION 2/1
Push Bar
INTERIOR
Filler
C2361
Exit Device
Lock cylinder
& escutcheon
Concealed Rod
14'-0" (168") UNIT WIDTH (MAX) BI-PART
EXTERIOR
HORTON SERIES 2000
HEADER
4" (101.6) X 6" (152.4)
EXT.
INTERIOR
8'-0" (96") UNIT HEIGHT
Lock cylinder
& escutcheon
AR Panic
Push
Bar
VERTICAL SECTION 1/1
DOOR SHOWN IN OPEN POSITION
14'-0" (168") UNIT WIDTH (MAX) BI-PART
8'- 0" (96") UNIT HEIGHT (MAX)
ELEVATION 4/1
(SO-SX-SX-SO)
C2361 ADAMS RITE G86
Panic Exit device
w/ Concealed Rod
Interior side
C2361 AR
Panic Exit device
w/ Concealed Rod
Interior side
FULL
EMERGENCY
BREAKOUT (TYP.)
FLOOR PLAN 5/1
7'-0" (84") UNIT WIDTH
(MAX) SINGLE SLIDE
8'-0" (96") UNIT HEIGHT (MAX)
ELEVATION 4/1
(SO-SX)
C2361 ADAMS RITE
Panic Exit device
w/ Concealed Rod
Interior side
FULL
EMERGENCY
BREAKOUT (TYP.)
FLOOR PLAN 5/1
14 x 8'-0"(168" X 96") (SO-SX-SX-SO) &
7' x 8'-0" (84" X 96") (SO-SX) & (SX-SO)
w/ AR Panic Exit Device & Concealed Rod
(See Sheet 3) Series 310 Non Impact
JOHN E. SCATES
3121 FAIRGATE DR.
CARROLLTON, TX 75007
FL PE 51737
4/8/16
JOHN E. SCATES
LICENSE
No. 51737
STATE OF
FLORIDA
PROFESSIONAL ENGINEER
PRODUCT REVISED
as complying with the Florida
Building Code
Acceptance No. 15-0922.13
Expiration Date 7/15/23
Product Control
NO. | REVISIONS DESCRIPTION | DATE
1 | REVISED PER METRO DADE MARK-UPS | 12/04/09
2 | REVISED NOA DRAWINGS | 09/02/15
ARCHITECT:
CONTRACTOR:
SERIES: 2001-310/110 TYPE:
STILE: MEDIUM FINISH:
ACTUATION:
C2361 Panic Exit Device
Dwg. No. 040302-N
Horton AUTOMATICS
A DIVISION OF OVERHEAD DOOR CORP.
4242 BALDWIN BOULEVARD
CORPUS CHRISTI, TEXAS 78405-3399
361-888-5591 1-800-531-3111
FAX: 361-888-6510, 1-800-531-3108
JOB METRO-DADE
LOCATION:
DISTRIBUTOR:
DWN: LRod
CHKD: J. LACKEY
P.O. #
DATE 3-02-04
SHEET 8 of 8
REVISION 2