MIAMI-DADE COUNTY
PRODUCT CONTROL SECTION
11805 SW 26 Street, Room 208
Miami, Florida 33175-2474
T (786) 315-2590 F (786) 315-2599
www.miamidade.gov/economy

DEPARTMENT OF REGULATORY AND ECONOMIC RESOURCES (RER)
BOARD AND CODE ADMINISTRATION DIVISION

NOTICE OF ACCEPTANCE (NOA)

Schlage Lock Company
6810 Hillsdale Court
Indianapolis, IN 46250

SCOPE:

This NOA is being issued under the applicable rules and regulations governing the use of construction materials. The documentation submitted has been reviewed and accepted by Miami-Dade County RER -Product Control Section to be used in Miami Dade County and other areas where allowed by the Authority Having Jurisdiction (AHJ).

This NOA shall not be valid after the expiration date stated below. The Miami-Dade County Product Control Section (In Miami Dade County) and/or the AHJ (in areas other than Miami Dade County) reserve the right to have this product or material tested for quality assurance purposes. If this product or material fails to perform in the accepted manner, the manufacturer will incur the expense of such testing and the AHJ may immediately revoke, modify, or suspend the use of such product or material within their jurisdiction. RER reserves the right to revoke this acceptance, if it is determined by Miami-Dade County Product Control Section that this product or material fails to meet the requirements of the applicable building code.

This product is approved as described herein, and has been designed to comply with the Florida Building Code, including the High Velocity Hurricane Zone.

DESCRIPTION: SteelCraft H Series Double glazed Outswing Commercial Steel Door w/wo Panic Exit-LMI

APPROVAL DOCUMENT: Drawing No **IRGD07 Rev K**, titled "Steelcraft H series Double outswing glazed", sheets 1 through 17 of 17, prepared by the manufacturer, dated 05-20-07 and last revised on 08/30/15, signed and sealed by Thomas Gordon, P.E., bearing the Miami-Dade County Product Control Revision stamp with the Notice of Acceptance number and expiration date by the Miami-Dade County Product Control Section.

MISSILE IMPACT RATING: Large and Small Missile Impact

Limitations:

1. See Design Pressures, Sizes, Hardware, DLO (Day light Opening), installation and Water infiltration (Threshold types) limitations in sheets **1**, **2**, 4, **5**, **7** & **8** of the drawings. Lower design Pressure shall control the assembly.
2. See limitations of DLO (vision) for configurations **3A (V-vision)** and **3B (N3, N4 & N5)** in sheet **7**.
3. Electrical/Electronic functions and Fire ratings are **not** part of this approval, such functions to be reviewed and approved by AHJ.

LABELING: Each unit shall bear a permanent label with the manufacturer's name or logo, Cincinnati, Ohio and Series and following statement: "Miami-Dade County Product Control Approved", unless otherwise noted herein.

RENEWAL of this NOA shall be considered after a renewal application has been filed and there has been no change in the applicable building code negatively affecting the performance of this product.

TERMINATION of this NOA will occur after the expiration date or if there has been a revision or change in the materials, use, and/or manufacture of the product or process. Misuse of this NOA as an endorsement of any product, for sales, advertising or any other purposes shall automatically terminate this NOA. Failure to comply with any section of this NOA shall be cause for termination and removal of NOA.

ADVERTISEMENT: The NOA number preceded by the words Miami-Dade County, Florida, and followed by the expiration date may be displayed in advertising literature. If any portion of the NOA is displayed, then it shall be done in its entirety.

INSPECTION: A copy of this entire NOA shall be provided to the user by the manufacturer or its distributors and shall be available for inspection at the job site at the request of the Building Official.

This NOA **revises & renews NOA #13-1217.15** and consists of this page 1 and evidence pages E-1, E-2 and E-3, as well as approval document mentioned above.

The submitted documentation was reviewed by **Ishaq I. Chanda, P.E.**

MIAMI-DADE COUNTY APPROVED

4/21/16

Schlage Lock Company

NOTICE OF ACCEPTANCE: EVIDENCE SUBMITTED

A. DRAWINGS

1. Manufacturer's parts and sections drawings (Submitted under file as below).
2. Drawing No **IRGD07 Rev K**, titled "Steelcraft H series Double outswing glazed", sheets 1 through 17 of 17, prepared by the manufacturer, dated 05-20-07 and last revised on 08/30/15, signed and sealed by Thomas Gordon, P.E.

B. TESTS (Submitted under files **#13-1217.15/#12-0305.15/ #10-0209.08/#07-0829.03**)

1. Test report on
   1) Air Infiltration Test, per TAS 202-94
   2) Uniform Static Air Pressure Test, Loading per TAS 202-94
   3) Large Missile Impact Test per FBC, TAS 201-94
   4) Cyclic Wind Pressure Loading per FBC, TAS 203-94
   5) Forced Entry Test, per PA 202-94

   Along with manufacturer's parts and section drawings of Single outswing steel doors w/ Stainless steel continuous Hinges & modified Hat stiffeners, marked by Certified Testing Lab, Test Reports No(s). **CTLA-3045W** dated February 16, 2015, signed and sealed by Ramesh Patel, P.E.
2. Test report on
   1) Air Infiltration Test, per TAS 202-94
   2) Uniform Static Air Pressure Test, Loading per TAS 202-94
   3) Large Missile Impact Test per FBC, TAS 201-94
   4) Cyclic Wind Pressure Loading per FBC, TAS 203-94
   5) Forced Entry Test, per PA 202-94

   Along with manufacturer's parts and section drawings of double outswing steel doors w/CVC panic exit and Peep hole, marked by Element Material Technology, Test Reports No(s). **ESP011623P** dated May 14, 2013, signed and sealed by Jason Sheen, P.E.
3. Test reports on
   1) Uniform Static Air Pressure Test, Loading per FBC TAS 202-94.
   2) Water Resistance Test per FBC TAS 202-94

   Along with marked-up drawings and installation diagram of double steel commercial doors, prepared by National Certified Testing Laboratories Inc., Test Report No. **NCTL- 210-03-0514-11,** dated August 31, 2004 , **NCTL 210- 03-3511-1** dated 04/09/08 and **NCTL 210- 03-3549-1** dated 08/26/08, all signed and sealed by Gerry Ferrara, P. E.

   Note: Test report No(s): NCTL210-3549-1 and NCTL-210-3511-1 have been revised by an addendum letter, issued by Lab, dated Feb. 04, 2009, signed & sealed by Gerard J. Ferrara, P. E.
4 Test report on
   1) Uniform Static Air Pressure Test, Loading per TAS 202-94
   2) Large Missile Impact Test per FBC, TAS 201-94
   3) Cyclic Wind Pressure Loading per FBC, TAS 203-94
   4) Forced Entry Test, per PA 202-94

   Along with manufacturer's parts and section drawings of double flush outswing steel doors, marked by National Certified Testing Lab, Test Reports No. **NCTL-210- 3580-2,** dated March 25, 2009, signed and sealed by Gerry Ferrara, P. E.

Ishaq I. Chanda

Ishaq I. Chanda, P.E.
Product Control Examiner
NOA No. 15-0930.04
Expiration Date: May 05, 2017
Approval Date: April 28, 2016

NOTICE OF ACCEPTANCE: EVIDENCE SUBMITTED

B. TESTS (continue)

5. Test report on (transferred from file # **07-0829.03**)
   1) Air Infiltration Test, per TAS 202-94
   2) Uniform Static Air Pressure Test, Loading per TAS 202-94
   3) Large Missile Impact Test per FBC, TAS 201-94
   4) Cyclic Wind Pressure Loading per FBC, TAS 203-94
   5) Forced Entry Test, per PA 202-94

Along with manufacturer's parts and section drawings of double glazed outswing steel doors, marked by Certified Testing Lab, Test Reports No(s). **CTLA-776W** dated February 20, 2002, **CTLA-975W** dated Jan 23, 2003, **CTLA-882W** dated Aug 29, 2002, **CTLA-1035W** dated May 28, 2003 and , **CTLA-1086-W** dated Nov. 17, 2003 and **CTLA-1107W-3** dated June 30, 2004, all signed and sealed by Ramesh Patel, P.E.

Note: Test report CTLA-1035W has been revised by an addendum letter dated Feb 20, 2009, signed and sealed by Ramesh Patel, P.E.

Along with manufacturer's parts and section drawings of glazed outswing double steel doors, marked by Certified Testing Lab, Test Reports No(s). **NCTL-210-3232-1** dated 02/24/06 and **NCTL-210-3357-1** dated Dec 28, 2006, signed and sealed by Gerard J. Ferrara, P.E.

6. Additional Reference test report No.CTLA-1107W for strap anchor qualification.

C. CALCULATIONS:

1. Anchor verification calculations per FBC 2014 (5th Edition) dated 08/30/15, prepared, signed & sealed by Thomas Gordon., P.E.
2. Hinge Load Evaluation report dtd 01/04/04, prepared, signed & sealed by Thomas Gordon, P.E.

D. QUALITY ASSURANCE BY

1. Miami Dade Department of Regulatory and Economic Resources (RER).

E. MATERIAL CERTIFICATIONS (items 6 thru 9, submitted under file # **10-0209.09**)

1. Notice of Acceptance No. **13–0717.01** issued to **Sabic Innovative Plastics** for their **"Lexan® Polycarbonate Sheet Products"**, expiring on July 17, 2018.
2. Notice of Acceptance No. **14-0916.11** issued to Kuraray America, Inc. (former E.I. DuPont DeNemours & Co., Inc.) for the "**Sentry Glass ® Interlayer**", expiring on 07/4/17.
3. Material composition & Flammability properties and Material Safety Data sheet of Pyrophobic P25C-60 core by Pyrophobic System LTD, dated DEC 05, 2010, issued by I. Zhvanetsky, chemical consultant.
4. Material composition & Flammability properties and Material Safety Data sheet of Calcium Silicate mineral block, issued by Marshfield Door Sys, Inc., Marshfield. WI 54449.
5. Test Report No. **12-11177**, Nov 29, 2012, issued by Commercial Testing Co. for "Surface Flame spread & Smoke density Characteristics of Building material" per ASTME84-12 for "Elfoam P200", issued to Elliott Co. of Indianapolis Inc.

Ishaq I. Chanda

Ishaq I. Chanda, P.E.
Product Control Examiner
NOA No. 15-0930.04
Expiration Date: May 05, 2017
Approval Date: April 28, 2016

NOTICE OF ACCEPTANCE: EVIDENCE SUBMITTED

E. MATERIAL CERTIFICATIONS (continue)

6. Test Report No. **16206-122543 (1015P200(3))**, dated November 29, 2004 for " Surface Burning Characteristics of Bldg material" per ASTME84 and self-Ignition per ASTM1929D for "Polyisocyanurate" issued by Omega Point Laboratories, Inc. to Elliot Co., Indianapolis, IN.
7. Tensile test report # CTLA-776W (0194H), dtd 02/25/02 prepared by CTL, Architectural Division, sheet samples, tested per ASTM E8, signed & sealed by Ramesh Patel, P.E.
8. Tensile Test report No. A103W1-Test 1, 2 & 3 dated 23 APR 03 per ASTME-8 for steel face sheet, prepared by Certified Testing laboratory, signed and sealed by Ramesh Patel, P.E.
9. Test Report No. **3094867SAT-001**, April 13, 2006, issued by Intertek for "Surface Burning Characteristics of Building material" per ASTME84 and self-Ignition per ASTM1929D for "EPS", issued to Falcon Foam, a Div of Atlas Roofing, re-named as "ATLAS EPS'.

F. STATEMENTS: Except items #1, balanced items submitted under files referenced above.

1. Letter of conformance to FBC 2014 (5th Edition), dated 08/30/15, prepared, signed and sealed by Gordon Thomas, P.E.
2. Statement letter dated Nov. 26, 2013 issued by Ingersoll-Rand for name change, signed by Jim Donlan, Compliance Engineer.
3. Ingersoll–Rand press release, dated 12/10/12, integrating the brands of Ingersoll–Rand and Schlage among others.
4. Department of State Certification of Reinstatement for **SCHLAGE LOCK COMPANY, LLC** as a limited liability company, active and organized under the laws of the State of Florida, dated 03/17/06 and filed with the Secretary of State
5. Certification of Formation dated 12-08-2003 of Schlage Lock Company, LLC, issued by Secretary of State of Delaware.
6. Statement letter of conformance to FBC 2007 and no financial interest, dated FEB 03, 2010, prepared, signed and sealed by Gordon Thomas, P.E.
7. Laboratory Compliance statement issued as part of the above test reports.
8. Addendum letters dated Feb 20, 2009 for test reports Test report CTLA-1035W, issued by Certified Testing lab, signed and sealed by Ramesh Patel, P.E
9. Addendum letter dated DEC 19, 2011, issued by Certified Testing Lab verifying wire anchors, strength of grout, stud anchor, Strike plate and MA series Mortise Lock, supplemented w/ marked-up drawings, signed and sealed by Ramesh Patel, P.E.
10. Letter of certification dated 04/20/10, issued by Ingersoll-Rand for electronic CO lock series mechanical /functional parts same as AD, ND and AD-M series

G. OTHER

1. This NOA **revises & renews NOA #13-1217.15,** expiring on 05/05/20.
2. One year conditional approval, subjected to successful verification test.
3. Request for 1-Year renewal by Schlage Company dated 02/02/16, signed by James Donlan.
4. Test proposals # **14-0252, -0254, #14-1086, #14-0254-R1** and **#12-0797R** approved by RER.
5. Consolidation Test proposal # **06-2468**, dated 04/27/07 approved by BCCO.
6. Previously consolidates NOA #(s) associated with this files are **#13-1217.15,#10-0209.08, 07-0829.05, 03-0908.03, 04-0303.03, 05-0325.02, 08-0508.07** and **08-0715.03**
7. Technical brochures of butt Hinges, continuous Hinges, Schlage & Falcon Mortise Locks, Supplied by Schlage Company (former Ingersoll-Rand).

Ishaq I. Chanda

Ishaq I. Chanda, P.E.
Product Control Examiner
NOA No. 15-0930.04
Expiration Date: May 05, 2017
Approval Date: April 28, 2016

RIM EXIT W/ HARDWARE MULLION.

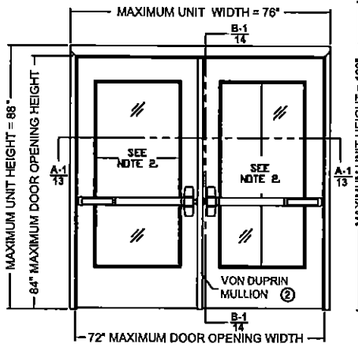

CONFIG.	DESIGN PRESSURE RATING, PSF: WHERE WATER INFILTRATION REQUIREMENT IS NEEDED	DESIGN PRESSURE RATING, PSF: WHERE WATER INFILTRATION REQUIREMENT IS NOT NEEDED
1	±60 SEE TABLE 3 ON SHT. 5	±60 SEE TABLE 4 ON SHT. 5

RIM EXIT W/ HARDWARE MULLION.

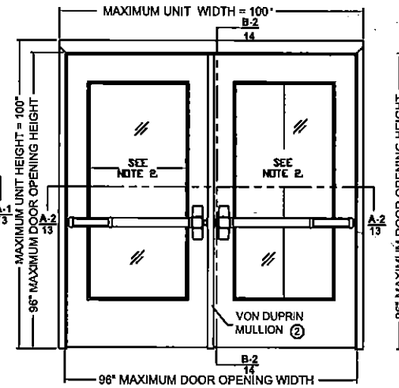

CONFIG.	DESIGN PRESSURE RATING, PSF: WHERE WATER INFILTRATION REQUIREMENT IS NEEDED	DESIGN PRESSURE RATING, PSF: WHERE WATER INFILTRATION REQUIREMENT IS NOT NEEDED
2	±50 SEE TABLE 3 ON SHT. 5	±50 SEE TABLE 4 ON SHT. 5

RIM EXIT W/ HARDWARE MULLION.

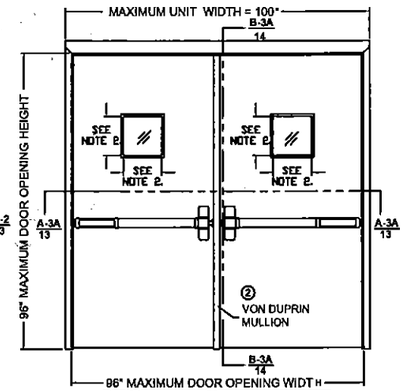

CONFIG.	DESIGN PRESSURE RATING, PSF: WHERE WATER INFILTRATION REQUIREMENT IS NEEDED	DESIGN PRESSURE RATING, PSF: WHERE WATER INFILTRATION REQUIREMENT IS NOT NEEDED
3A	±75 SEE TABLE 3 ON SHT. 5	±90 SEE TABLE 4 ON SHT. 5

RIM EXIT W/ HARDWARE MULLION.

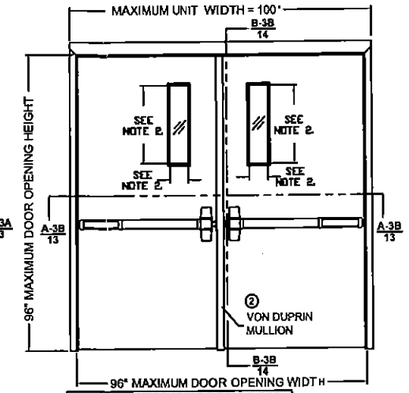

CONFIG.	DESIGN PRESSURE RATING, PSF: WHERE WATER INFILTRATION REQUIREMENT IS NEEDED	DESIGN PRESSURE RATING, PSF: WHERE WATER INFILTRATION REQUIREMENT IS NOT NEEDED
3B	±75 SEE TABLE 3 ON SHT. 5	±90 SEE TABLE 4 ON SHT. 5

GORDON D. THOMAS LICENSE No. 47189 STATE OF FLORIDA PROFESSIONAL ENGINEER

Gordon Thomas, P.E. Date
3759 Blossom Court
Mason, OH 45040
Florida #46718

REVISIONS				
LTR	DESCRIPTION		DATE	APPROVED
A	APPROVAL DWG	YMF	05/20/07	
E	REVISED DWG	YMF	02/05/09	
F	REVISED DWG	YMF	01/04/10	
G	REVISED DWG	YMF	04/08/10	
H	REVISED NAME	JPD	11/01/13	
J	REVISED DWG	JPD	02/01/15	
K	REVISED DWG	JPD	05/05/15	

DETAIL 'C' MEETING DOOR EDGES

DOOR CONFIGURATIONS: 10, 11
Z-ASTRAGAL ON
INACTIVE LEAF

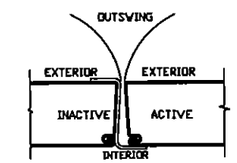

DOOR CONFIGURATIONS: 1, 2, 3A, 3B, 6, 8
VON DUPRIN HARDWARE MULLION

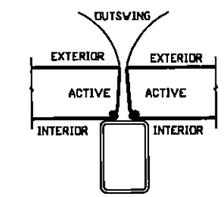

REMOVABLE HARDWARE MULLION
SEE SHEET 10

DOOR CONFIGURATIONS: 4 & 5
NO ASTRAGAL / NO MULLION
BOTH DOORS ACTIVE

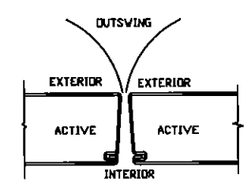

DOOR CONFIGURATION: 7 & 9
FIXED HOLLOW METAL MULLION

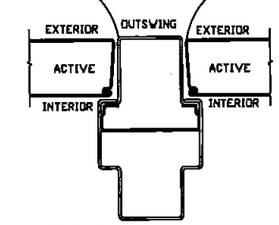

FIXED HOLLOW METAL MULLION
SEE SHEET 6

SURFACE VERTICAL ROD EXIT

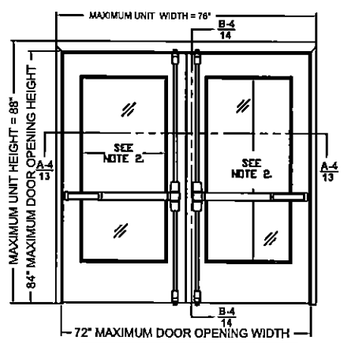

CONFIG.	DESIGN PRESSURE RATING, PSF: WHERE WATER INFILTRATION REQUIREMENT IS NEEDED	DESIGN PRESSURE RATING, PSF: WHERE WATER INFILTRATION REQUIREMENT IS NOT NEEDED
4	±60 SEE TABLE 3 ON SHT. 5	±60 SEE TABLE 4 ON SHT. 5

CONCEALED VERTICAL ROD EXIT

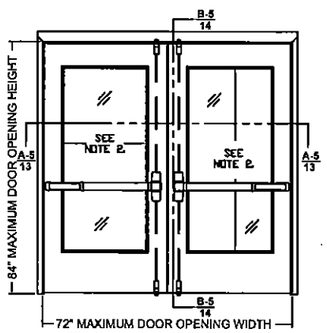

CONFIG.	DESIGN PRESSURE RATING, PSF: WHERE WATER INFILTRATION REQUIREMENT IS NEEDED	DESIGN PRESSURE RATING, PSF: WHERE WATER INFILTRATION REQUIREMENT IS NOT NEEDED
5	±60 SEE TABLE 3 ON SHT. 5	±60 SEE TABLE 4 ON SHT. 5

THREE-POINT LATCHING EXIT HARDWARE MULLION

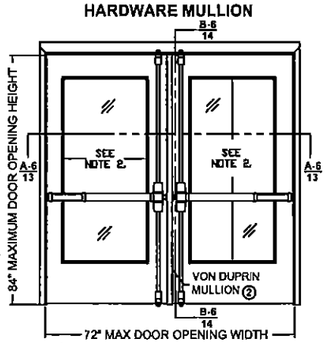

CONFIG.	DESIGN PRESSURE RATING, PSF: WHERE WATER INFILTRATION REQUIREMENT IS NEEDED	DESIGN PRESSURE RATING, PSF: WHERE WATER INFILTRATION REQUIREMENT IS NOT NEEDED
6	±60 SEE TABLE 3 ON SHT. 5	±60 SEE TABLE 4 ON SHT. 5

THREE-POINT LATCHING EXIT FIXED HOLLOW METAL MULLION

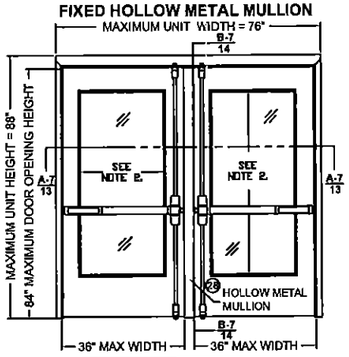

CONFIG.	DESIGN PRESSURE RATING, PSF: WHERE WATER INFILTRATION REQUIREMENT IS NEEDED	DESIGN PRESSURE RATING, PSF: WHERE WATER INFILTRATION REQUIREMENT IS NOT NEEDED
7	±60 SEE TABLE 3 ON SHT. 5	±60 SEE TABLE 4 ON SHT. 5

THREE-POINT LATCHING EXIT W/ VON DUPRIN HARDWARE MULLION

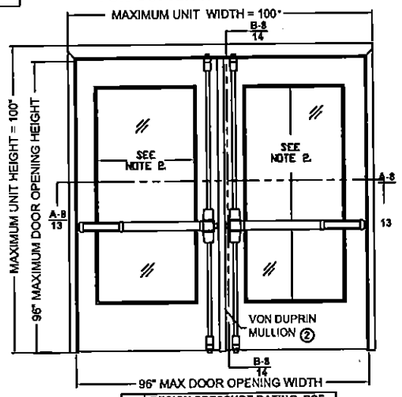

CONFIG.	DESIGN PRESSURE RATING, PSF: WHERE WATER INFILTRATION REQUIREMENT IS NEEDED	DESIGN PRESSURE RATING, PSF: WHERE WATER INFILTRATION REQUIREMENT IS NOT NEEDED
8	±50 SEE TABLE 3 ON SHT. 5	±50 SEE TABLE 4 ON SHT. 5

THREE-POINT LATCHING EXIT FIXED HOLLOW METAL MULLION

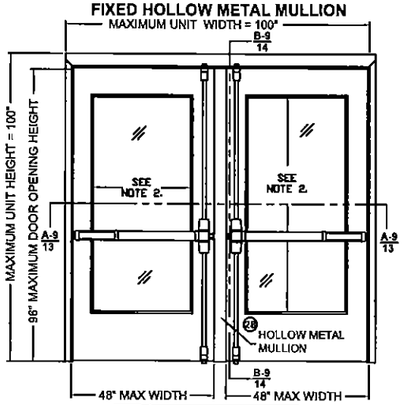

CONFIG.	DESIGN PRESSURE RATING, PSF: WHERE WATER INFILTRATION REQUIREMENT IS NEEDED	DESIGN PRESSURE RATING, PSF: WHERE WATER INFILTRATION REQUIREMENT IS NOT NEEDED
9	±50 SEE TABLE 3 ON SHT. 5	±50 SEE TABLE 4 ON SHT. 5

SURFACE BOLTS / MORTISE LOCK

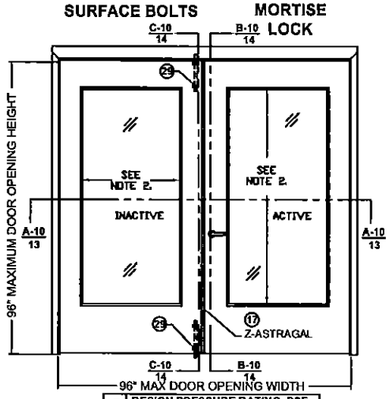

CONFIG.	DESIGN PRESSURE RATING, PSF: WHERE WATER INFILTRATION REQUIREMENT IS NEEDED	DESIGN PRESSURE RATING, PSF: WHERE WATER INFILTRATION REQUIREMENT IS NOT NEEDED
10	±50 SEE TABLE 3 ON SHT. 5	±50 SEE TABLE 4 ON SHT. 5

SURFACE BOLTS / CYLINDRICAL LOCK (MIN. 1/2" THROW LATCH)

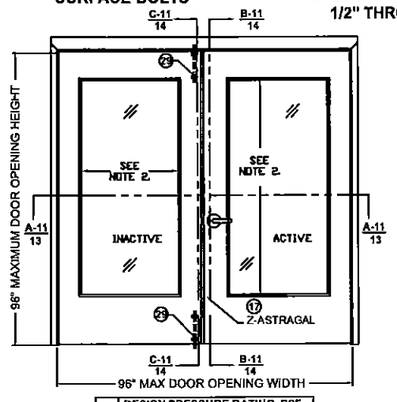

CONFIG.	DESIGN PRESSURE RATING, PSF: WHERE WATER INFILTRATION REQUIREMENT IS NEEDED	DESIGN PRESSURE RATING, PSF: WHERE WATER INFILTRATION REQUIREMENT IS NOT NEEDED
11	±50 SEE TABLE 3 ON SHT. 5	±50 SEE TABLE 4 ON SHT. 5

COMPLIANCE STATEMENT:

1. THESE PRODUCTS HAVE BEEN TESTED TO HVHZ PROTOCOLS TAS201, 202 & 203-94 AND COMPLY WITH THE CURRENT FLORIDA BUILDING CODE.

NOTES:

1. INTERIOR VIEWS ARE SHOWN FOR ALL ELEVATIONS OF OUTSWING DOORS
2. SEE TABLE 1 ON SHEET 2 FOR GLAZING SIZE, GLAZING TYPE, HARDWARE APPLICATIONS & LIMITATIONS
3. SEE SHEET 3 & 16 FOR HINGE REQUIREMENTS
4. SEE SHEET 4 & 17 FOR ANCHORING TYPES AND LIMITATIONS
5. SEE SHEET 3, 4, 5 AND 17 FOR SILL INSTALLATION INFORMATION
6. SEE SHEET 5 FOR WEATHERSTRIPPING INSTALLATION DETAILS AND LIMITATIONS
7. SEE SHEETS 1 AND 3 FOR MAXIMUM OVERALL DOOR UNIT SIZES
8. SEE SHEET 8 FOR GLAZING OPTIONS AND DETAILS
9. DLO - DAYLIGHT OPENING SIZE, SAME AS EXPOSED GLASS, SEE SHEETS 1, 2 AND 7 FOR SIZES AND LIMITATIONS

PRODUCT REVISED
as complying with the Florida Building Code
Acceptance No. 15-0930.04
Expiration Date MAY 05, 2017
By Shing L. Chang
Miami-Dade Product Control

BEND RADIUS

THIRD ANGLE PROJECTION

DRAWN	YMF	DATE 05/20/07
CHECKED		
APPROVED		
ENG. APPVL	JPD	11/15/07

SCHLAGE LOCK COMPANY, LLC
6810 HILLSDALE COURT
INDIANAPOLIS, IN 46250

MANUFACTURING FACILITY:
STEELCRAFT
9017 BLUE ASH ROAD
CINCINNATI, OH 45242

TITLE: STEELCRAFT H SERIES DOUBLE OUTSWING GLAZED COMMERCIAL STEEL DOORS WITH AND WITHOUT PANIC EXIT DEVICES

GLASS OUTSWING, DOUBLE DOORS AND HARDWARE CONFIGURATIONS.

SIZE	FLAT	DWG NO. IRGD07	REV K
SCALE: NTS	AUTOCAD		SHEET 1 OF 17

Door Configuration	Maximum Design Pressure, PSF		Maximum Door Opening Size, in.		Maximum Exposed Glazing Size (DLO)*, in.		Locking Hardware Description				Comments
	Positive	Negative	Width	Height	Width	Height	Hardware Family	Model/Series	Strike Models	Brand	
1	60	60	72	84	24	64	Rim Exit Device	98/99(F)	299F/499F	Von Duprin	for pairs use (KR)9954 mullion by Von Duprin See Sheet 10
								88-F	268	Von Duprin	
2	50	50	96	96	34.25	74.5	Rim Exit Device	98/99(F)	299F/499F	Von Duprin	for pairs use (KR)9954 mullion by Von Duprin See Sheet 10
								88-F	268	Von Duprin	
3A	90 SEE NOTE 2.	90 SEE NOTE 2.	96	96	12	12	Rim Exit Device	XP98/99(F)	909/954	Von Duprin	for pairs use (KR)9954 mullion by Von Duprin See Sheet 10
3B					3 4 5	33 25 20					
4	60	60	72	84	24	64	Surface Vertical Rod Exit Device	98/9927(F)	299F-499F top, 304L/284L4 Bottom	Von Duprin	
								(F)25-V	3788 Top, 2130 Bottom	Falcon	
5	60	60	72	84	24	64	Concealed Vertical Rod Exit Device	98/9947-F	338 Top, 385A Bottom	Von Duprin	
								33/3547A-F	338 Top, 385A Bottom	Von Duprin	
								F-25-C	4188 Top, 2130 Bottom	Falcon	
6	60	60	72	84	24	64	Three-Point Latching Device	98/9957(F)	299F/499F Top/Middle, 304L/248L4 Bottom	Von Duprin	for pairs use (KR)9954 mullion by Von Duprin See Sheet 10
7	60	60	36	84	24	64	Three-Point Latching Device	98/9957(F)	299F/499F Top/Middle, 304L/248L4 Bottom	Von Duprin	NOTE 3
8	50	50	96	96	34.25	74.5	Three-Point Latching Device	98/9957(F)	299F/499F Top/Middle, 304L/248L4 Bottom	Von Duprin	
9	50	50	48	96	34.25	74.5	Three-Point Latching Device	98/9957(F)	299F/499F Top/Middle, 304L/248L4 Bottom	Von Duprin	NOTE 3
10	50	50	96	96	34.25	74.5	Mortise Lock	L/LV9000/AD MS	10-072	Schlage	Function w/o deadbolt, 3/4" min. throw latch
								L/LV9400/AD MD	10-072	Schlage	Function with deadbolt, 3/4" min. throw latch & 1" min. throw bolt
								M	ANSI	Falcon	function with or without deadbolt, 3/4" min. throw latch & 1" min. throw bolt (if applicable)
11	50	50	96	96	34.25	74.5	Cylindrical Lock	D/ND/AD CYL	10-025	Schlage	1/2" throw latch
								T	ANSI	Falcon	1/2" throw latch

TABLE 1.

GORDON D. THOMAS LICENSE 46718 STATE OF FLORIDA PROFESSIONAL ENGINEER

Gordon Thomas, P.E.
3759 Blossom Court
Mason, OH 45040
Florida # 46718

Date

REVISIONS				
LTR	DESCRIPTION		DATE	APPROVED
A	APPROVAL DWG	YMF	05/20/07	
B	REVISED DWG	RAP	11/26/07	
C	REVISED DWG	RAP	12/14/07	
D	REVISED DWG	YMF	10/22/08	
E	REVISED PER_MDBCCD	YMF	02/05/09	
F	REVISED PER_MFR	YMF	05/18/09	
G	REVISED PER_MDBCCD	YMF	04/09/10	
H	REVISED NAME	JPD	11/01/13	
J	REVISED DWG	JPD	02/01/15	
K	REVISED DWG	JPD	05/05/15	

PRODUCT REVISED
as complying with the Florida Building Code
Acceptance No. 15-0920.04
Expiration Date 5/5/17
Miami-Dade Product Control

NOTES:
1. SEE SHEETS 9, 10, 11 & 12 FOR LOCKING HARDWARE. FOR DOOR CONFIGURATIONS 10 & 11 INACTIVE LEAF REQUIRES IVES SB360 SURFACE BOLT TOP AND BOTTOM.
2. DOOR CONFIGURATIONS 3A & 3B ARE RATED FOR MAXIMUM DESIGN PRESSURE UP TO +75 PSF WHEN WATER INFILTRATION REQUIREMENT IS NEEDED, AND ±90 PSF WHEN WATER INFILTRATION REQUIREMENT IS NOT NEEDED.
3. DOOR CONFIGURATIONS 7 & 9 ARE FOR USE ON TWO DOORS WITH FIXED HOLLOW METAL MULLION.
4. * DLO - DAYLIGHT OPENING, SAME AS EXPOSED GLASS OR FINISHED OPENING. SEE SHEETS 7 & *8 FOR GLAZING TYPES, DETAILS AND LIMITATIONS

BEND RADIUS

THIRD ANGLE PROJECTION

DRAWN YMF	DATE 05/20/07	SCHLAGE LOCK COMPANY, LLC 6810 HILLSDALE COURT INDIANAPOLIS, IN 46250
CHECKED		MANUFACTURING FACILITY: STEELCRAFT 9017 BLUE ASH ROAD CINCINNATI, OH 45242
APPROVED		TITLE: STEELCRAFT H SERIES DOUBLE OUTSWING GLAZED COMMERCAL STEEL DOORS WITH AND WITHOUT PANIC EXIT DEVICES GLASS OUTSWING DOORS AND HARDWARE CONFIGURATIONS COMMERCIAL DOOR OPENING DOUBLE GLASS DOORS.
ENG. APPVL JPD	11/15/07	SIZE FLAT · DWG NO. IRGD07 · REV K SCALE: NTS · AUTOCAD · SHEET 2 OF 17

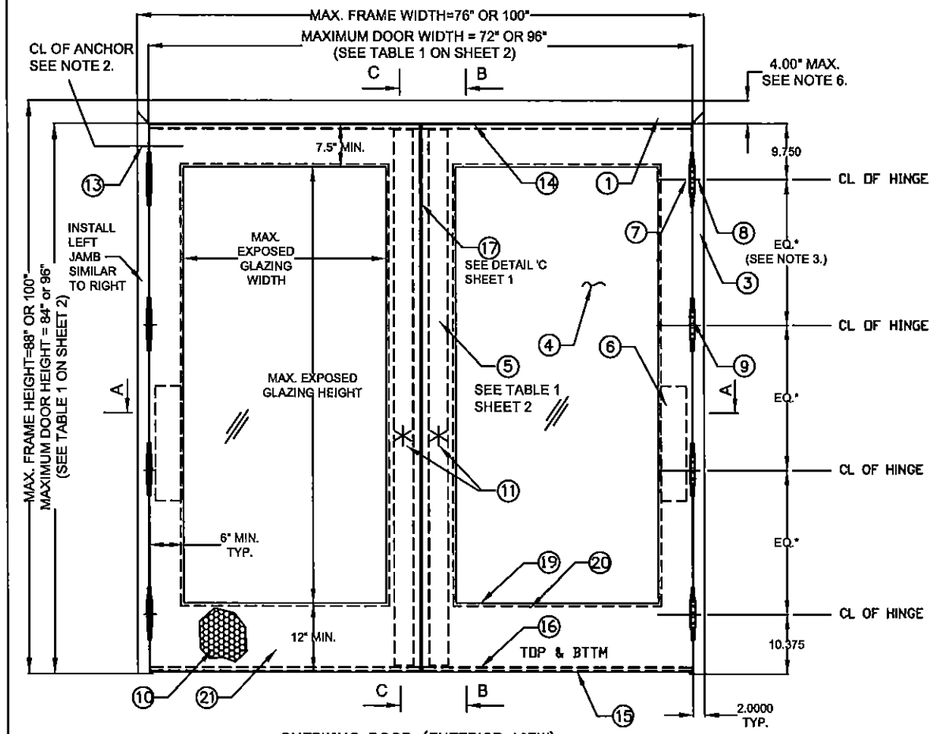

OUTSWING DOOR (EXTERIOR VIEW)
ALL DIMENSIONS TYPICAL, UNLESS SPECIFIED OTHERWISE

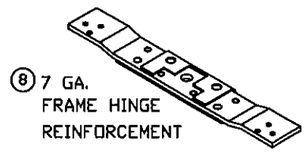

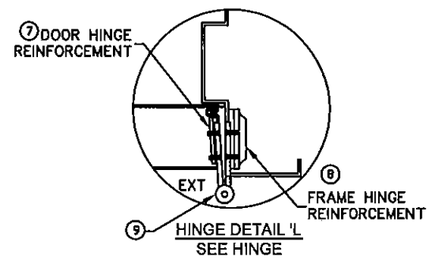

HINGE DETAIL 'L'
SEE HINGE OPTIONS SHEET 16

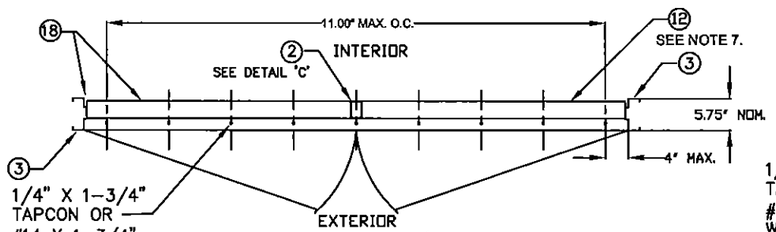

TYPICAL SILL INSTALLATION (SEE SHT.5)

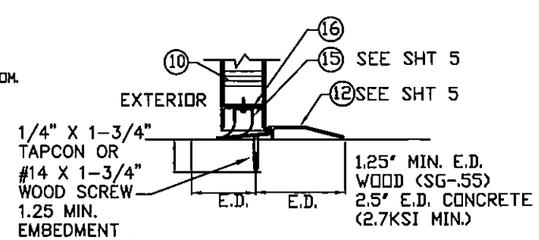

SILL DETAIL (SIDEVIEW)
WOOD OR CONCRETE SILL
E.D.=EDGE DISTANCE

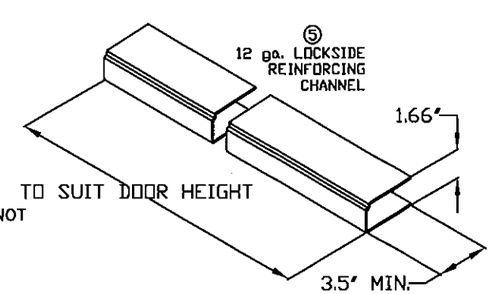

NOTES:
1. ONE ROW OF PS074 WEATHERSTRIPPING PER JAMB AND HEAD. INSTALL PER SHT. 5.
2. ANCHOR REQUIREMENTS: SEE SHEETS 4 & 17 FOR APPROVED ANCHORS AND INSTALLATION
3. HINGE REQUIREMENTS: 4.5" STD WT. MIN.
   FOR DOOR OPENING UP TO 90" HIGH – MIN (3) HINGES
   FOR DOOR OPENING OVER 90" – 96" HIGH – MIN (4) HINGES
   STD LOCATIONS: 9.75" FROM RABBET IN HEAD TO CL OF TOP HINGE
   10.38" FROM FLOOR TO CL OF BOTTOM HINGE, EQUALLY SPACED IN BETWEEN. HINGE LOCATIONS MAY VARY, MAX SPACING DO NOT EXCEED 35.5" APPROVED CONTINUOUS HINGE MODELS: IVES 112 HD, 224HD, 600, 700, 700CS MARKAR FM-300, HG-305, STANELY 661HD, HAGER 780-224HD, 790-900, SELECT SL11HD, ABH A500, A240HD.
4. SEE SHEET 2 TABLE 1 FOR AVAILABLE STANDARD OPENING SIZES AND SPECIFICATIONS.
5. HARDWARE INSTALLATION AS PER MANUFACTURER'S INSTRUCTIONS.
6. 4" FACE HEAD IS AVAILABLE FOR FRAMES.
7. APPLY CAULK AS NEEDED.
8. WEATERSTRIPPING SEE SHT #5.
9. SEE SHEET 13 FOR SECTION A–A, SEE SHEET 14 FOR SECTIONS B–B AND C–C.
10. INSTALL REINFORCEMENT CHANNELS (ITEM #20) AROUND EACH LITE–CUTOUT.
11. ELECTRICAL INSTALLATION AND FIRE RATINGS ARE UNDER SEPARATE APPROVAL AND MUST BE REVIEWED BY CORRESPONDING AUTHORITY.
12. OPTIONAL POWER TRANSFERS, AND/OR "SIGNAL SWITCH" MAY BE USED AS ALLOWED BY CODE AND IT DOES NOT EFFECT THE MECHANICAL PROPERTIES OF EXIT DEVICE AND/OR INHIBIT EGRESS.
13. SILL SHALL BE ANCHORED PER INSTALLATION DETAIL ON THIS SHEET AND SHEETS 4, 5 & 17.
14. ITEMS 22 THROUGH 27 REQUIRED ONLY IF WATER INFILTRATION IS NEEDED. SEE TABLE 3 SHEET 5
15. QUANTITY WILL INCREASE WHEN USED WITH HOLLOW METAL MULLION. SEE SHT 6 FOR DETAILS.

PRODUCT REVIEWED
as complying with the Florida Building Code
Acceptance No 15-0930.04
Expiration Date 5/5/17
By Ishaq I. Chowdhury
Miami-Dade Product Control

GORDON D. THOMAS LICENSED 46718 STATE OF FLORIDA PROFESSIONAL ENGINEER
Gordon Thomas, P.E.
3759 Blossom Court
Mason, OH 45040
Florida # 46718
Date

REVISIONS

LTR	DESCRIPTION		DATE	APPROVED
A	APPROVAL DWG.	YMF	05/20/07	
E	REVISED PER_MDBCCD	YMF	02/05/09	
F	REVISED PER_MDBCCD	YMF	02/01/10	
G	REVISED PER_MDBCCD	YMF	04/08/10	
H	REVISED NAME	JPD	11/01/13	
J	REVISED NAME	JPD	02/01/15	
K	REVISED DWG	JPD	05/05/15	

TABLE 2

ITEM	QUANTITY	DESCRIPTION	MATERIAL	SIZE
1	1	HEAD SEE SHT 6 ASTM A366	.053" MIN. STL	MAX. 100" — SEE ELEVATION ON SHT. 1
2	1	VON DUPRIN (KR) 9954 HDWE MULLION USED W/RIM HDWE	.123" A500 STL	MAX. 96" HEIGHT — SEE ELEVATION ON SHT. 1
3	2	HINGE JAMB SEE SHT 6 ASTM A366	.053" MIN. STL	MAX. 100" HEIGHT — SEE ELEVATION ON SHT. 1
4	2	LEXAN BY SABIC INNOVATIVE PLASTICS	.25" OR .50"	35.406" X 75.656" MAX.
		LAMINATED GLASS WITH SENTRYGLAS INTERLAYER	.562" TYP.	
		SUPERLITE II-XL BY SAFTI WITH SENTRYGLAS INTERLAYER	1.06" TYP.	
5	2	LOCK SIDE REINFORCEMENT CHANNEL	.093" MIN. STL	3.5 X 93.44 MAX
6	2	HINGE SIDE PANIC REINFORCEMENT	.067" MIN. STL	MAX. 20"
7	NOTE 3.	HINGE REINFORCEMENT DOOR ASTM A621	.167" MIN. STL.	1.28" X 9.19"
8	NOTE 3.	HINGE REINFORCEMENT FRAME ASTM A621	.167" MIN. STL.	1.3" X 9.187" MAX.
9	NOTE 3.	4.5" X 4.5" BUTT HINGES (SEE SHT. 16)	.134 MIN.	(8) #12-24 MS PER HINGE
		OPTIONAL CONTINUOUS HINGE (SEE SHT. 16)	.075" MIN. STL/.12 ALUM	MAX. 95"
10	2	CORE MATERIAL (SHEET 15): D) HONEYCOMB C) STEEL STIFFENED A & F) POLYSTYRENE; B & F) POLYURETHANE/POLYISOCYANURATE E) MINERAL BOARD TEMPERATURE RISE CORE		
11	2	LOCKING HARDWARE – SEE SHEET 2 TABLE 1.		
12	1	THRESHOLD SILL W/BUMPER GASKET (SEE TABLES 3&4, SHT.5)		
		1) ZERO 566A	.125" ALUM. 6063 T5	5.50"X0.5"X96"MAX.–DOUBLE
		2) NAT'L GUARD 950A	.078" ALUM. 6063 T5	5.50"X0.5"X48"MAX.–SINGLE
13	NOTE 2.	JAMB ANCHOR ASTM A924	SEE SHEET 6	
14	NOTE 14.	PS074 WEATHER STRIPPING	TPE	MAX. 24"
15	2	FAS-SEAL DOOR SWEEP	TPE	MAX. 48"
16	4	END CHANNEL ASTM A924 (14 GA – INVERTED)		.69" X 1.66" X 48" MAX.
17	1	SPLIT ASTRAGAL SET OR Z-ASTRAGAL (NOT REQUIRED WITH HOLLOW METAL MULLION)	SEE SHEET 5	
18	AS NEEDED	BUTYL RUBBER OR 100% SILICONE		
19	AS NEEDED	GLAZING HOLDING TRIM		34.25" X 74.5" EXPOSED GLASS MAX. SEE SHEETS 7 & 8 FOR DETAILS & LIMITATIONS
		#1) DEZIGNER TRIM	.035" MIN. STL	
		#2) STEEL OVERLAPPING TRIM		
		#3) STEEL OVERLAPPING TRIM		
		#4) HIGH SECURITY VISION FRAME — SG-10 BY ANEMOSTAT	.093"(12GA) MIN. STL.	
20	NOTE 10.	CUTOUT REINFORCEMENT CHANNEL (18 GA)	.047" MIN. STL	0.5" X 1.66" X 35.5" 75.5" MAX.
21	2	DOOR SLAB (16 OR 14 GA)	SEE SHEETS 3 & 6	3' X 7' OR 4' X 8' MAX.
22	1	BY ZERO INT'L — DOOR SEAL No.8144S/FS (SEE NOTE 14)	TPE	MAX. 24"
		BY STEELCRAFT — DOOR SEAL PS074		
23	2 NOTE 14.	BY ZERO INT'L — DOOR SWEEP No.539	TPE	MAX. 84" OR 96"
		BY NGP — DOOR SWEEP No.202N		
24	2	BY ZERO INT'L — DOOR SWEEP No.139	SEE SHEET 5	MAX. 36" OR 48"
25	2	BY ZERO INT'L — ADJUSTABLE STOP No.475	TPE	MAX. 84" OR 96"
		BY NGP — ADJUSTABLE STOP No.170N		
26	2	BY ZERO INT'L — RAIN DRIP No.11	SEE SHEET 5	MAX. 36" OR 48"
		BY NGP — DRIP CAP No.16A		
27	2	TOP CAP GALV. A60 ASTM A924	.020" MIN. STL	0.5" X 1.76" X 48" MAX.
28	1	HOLLOW METAL MULLION	SEE SHEETS 5 & 6	84" OR 96" MAX.
29	2	IVES 360 12" SURFACE BOLT – TOP & BOTTOM INACTIVE LEAF CONFIG. 10 & 11		

BEND RADIUS

THIRD ANGLE PROJECTION

DRAWN	YMF	DATE 05/20/07
CHECKED		
APPROVED		
ENG. APPVL	JPD	11/15/07

SCHLAGE LOCK COMPANY, LLC
6810 HILLSDALE COURT
INDIANAPOLIS, IN 46250

MANUFACTURING FACILITY:
STEELCRAFT
9017 BLUE ASH ROAD
CINCINNATI, OH 45242

TITLE: STEELCRAFT H SERIES DOUBLE OUTSWING GLAZED COMMERCIAL STEEL DOORS WITH AND WITHOUT PANIC EXIT DEVICES

H-SERIES GLASS DOUBLE DOORS OUTSWING CONFIGURATIONS

SIZE	FLAT	DWG NO.	REV
		IRGD07	K

SCALE: NTS | AUTOCAD | SHEET 3 of 17

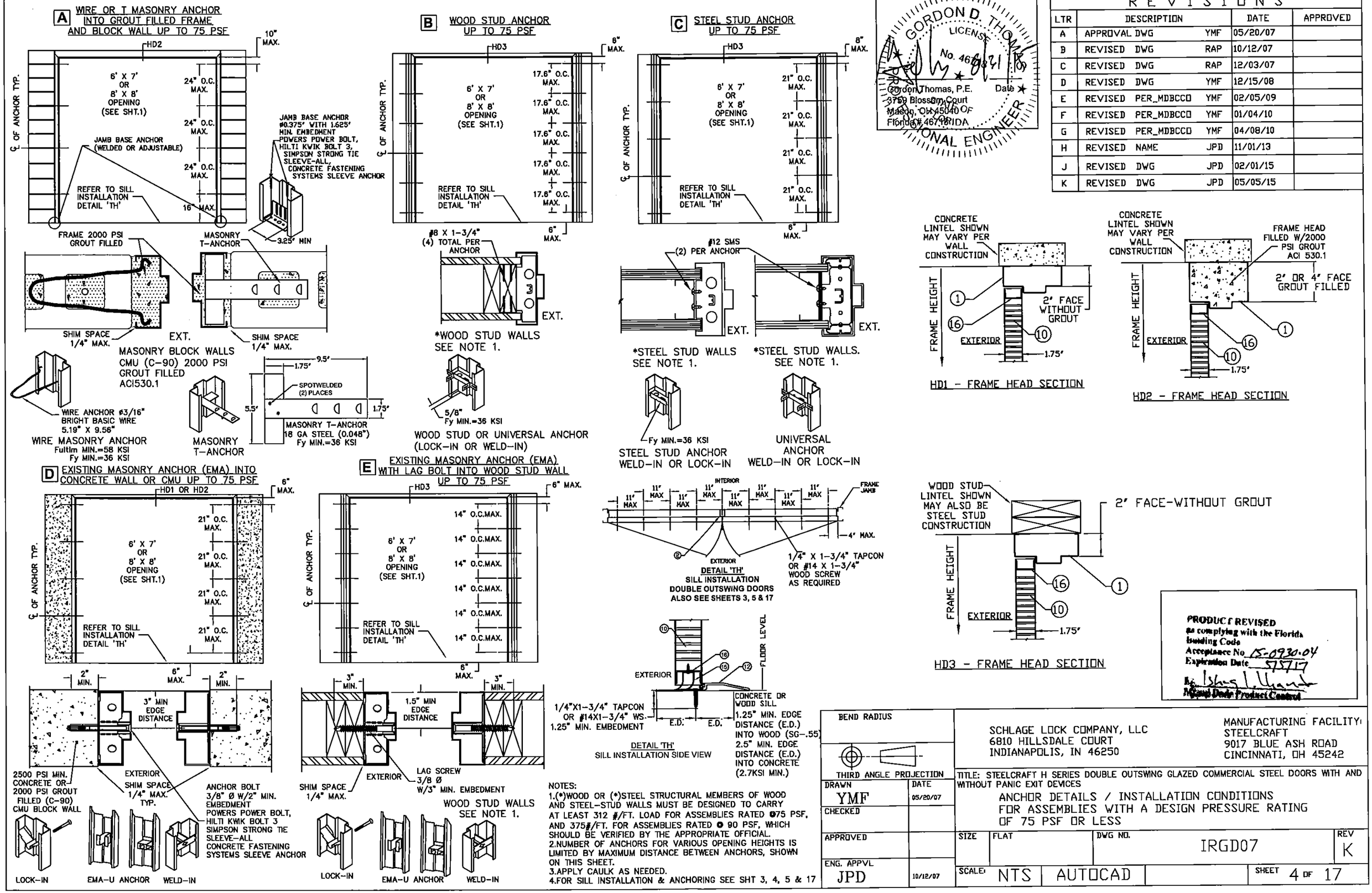

NOTES:
1.(*)WOOD OR (*)STEEL STRUCTURAL MEMBERS OF WOOD AND STEEL-STUD WALLS MUST BE DESIGNED TO CARRY AT LEAST 312 #/FT. LOAD FOR ASSEMBLIES RATED ⊙75 PSF, AND 375#/FT. FOR ASSEMBLIES RATED ⊙ 90 PSF, WHICH SHOULD BE VERIFIED BY THE APPROPRIATE OFFICIAL.
2.NUMBER OF ANCHORS FOR VARIOUS OPENING HEIGHTS IS LIMITED BY MAXIMUM DISTANCE BETWEEN ANCHORS, SHOWN ON THIS SHEET.
3.APPLY CAULK AS NEEDED.
4.FOR SILL INSTALLATION & ANCHORING SEE SHT 3, 4, 5 & 17

TABLE 3.

PERIMETER SEAL HARDWARE WHEN WATER INFILTRATION REQUIREMENT DOES APPLY

ITEM NUMBER SHT 3. TABLE 2	DESCRIPTION	MAX. ALLOWABLE DESIGN PRESSURE, PSF *	MODEL No./ MANUFACTURER	PART DETAIL	INSTALLATION DETAIL
12	THRESHOLD	+75	566/ZERO INT'L	'T1'	'P1'
			950/NGP	'T2'	'P2'
15	FAS-SEAL SWEEP	+75	STEELCRAFT	'S'	'P1' & 'P2'
17	SPLIT ASTRAGAL	+75	328/ZERO INT'L	'GG1'	'N3'
			137/NGP	'GG2'	
22 OR 14	SELF ADHESIVE DOOR SEAL	+75	8144S/FS/ZERO INT'L	'U'	'M' & 'N'
			PS074/STEELCRAFT	'Q'	
23	DOOR SWEEP	+75	539/ZERO INT'L	'W1'	'N'
			202N/NGP	'W2'	
24	DOOR SWEEP	+75	139/ZERO INT'L	'X'	'P1'
25	ADJUSTABLE STOP	+75	475/ZERO INT'L	'Y1'	'M'
			170N/NGP	'Y2'	
26	RAIN DRIP CAP	+75	11/ZERO INT'L	'Z1'	'P1'
			16A/NGP	'Z2'	'P2'
27	DOOR TOP CAP	+75	STEELCRAFT	'R'	'M'

TABLE 4.

PERIMETER SEAL HARDWARE WHEN WATER INFILTRATION REQUIREMENT DOES NOT APPLY

ITEM NUMBER SHT. 3 TABLE 2	DESCRIPTION	MODEL No. MANUFACTURER	PART DETAIL	INSTALLATION DETAIL
12	THRESHOLD	566 BY ZERO INT'L	'T1'	'K'
		950 BY NATIONAL GUARD	'T2'	
15	FAS-SEAL DOOR SWEEP	STEELCRAFT	'S'	'K'
17	SPLIT ASTRAGAL	328 BY ZERO	'GG1'	'N3'
		137 BY NGP	'GG2'	
14	PS-074 SELF ADHESIVE WEATHERSTRIPPING	STEELCRAFT	'Q'	'J' & 'L'
27	DOOR TOP CAP	STEELCRAFT	'R'	OPTIONAL

*SEE SHEETS 1 & 2 FOR DESIGN PRESSURE RATINGS.

GORDON D. THOMAS LICENSE No. 46718 STATE OF FLORIDA PROFESSIONAL ENGINEER

Gordon Thomas, P.E. Date
3759 Blossom Loud
Mason, OH 45040
Florida # 46718

REVISIONS				
LTR	DESCRIPTION		DATE	APPROVED
A	APPROVAL DWG	YMF	05/20/07	
E	REVISED PER_MDBCCO	YMF	02/05/09	
F	REVISED PER_MDBCCO	YMF	01/04/10	
G	REVISED PER_MDBCCO	YMF	04/08/10	
H	REVISED NAME	JPD	11/01/13	
J	REVISED DWG	JPD	02/01/15	
K	REVISED DWG	JPD	05/05/15	

PERIMETER SEAL INSTALLATION DETAILS WHEN WATER INFILTRATION REQUIREMENTS DO NOT APPLY

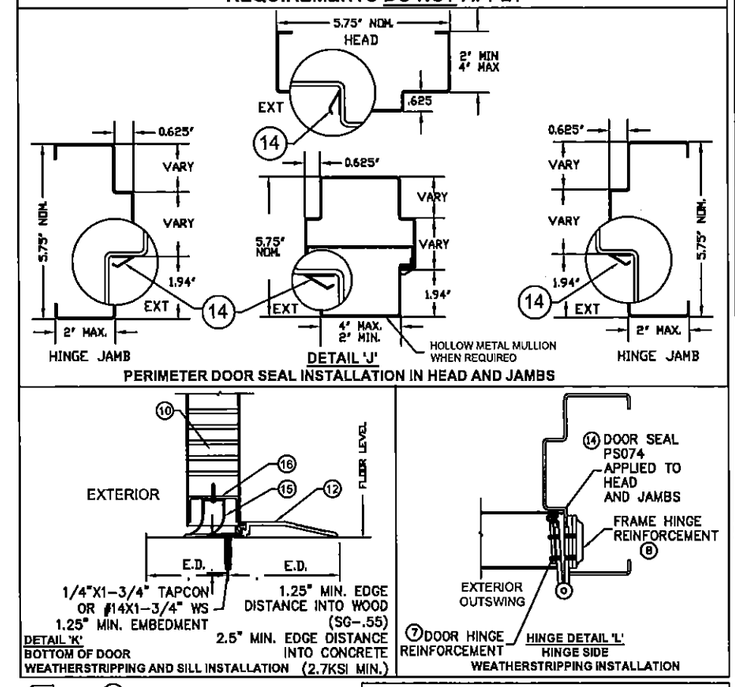

PART DETAILS

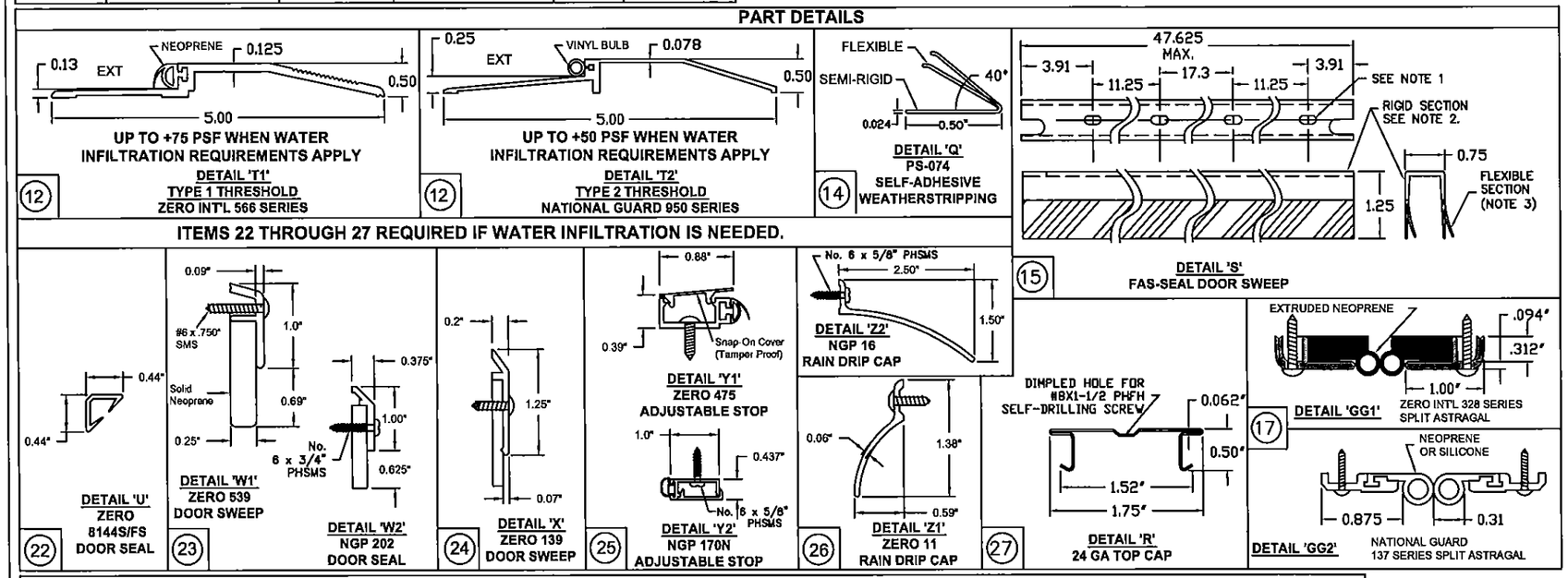

PERIMETER SEAL INSTALLATION DETAILS WHEN WATER INFILTRATION REQUIREMENTS APPLY (SEE SHEETS 1 & 2)

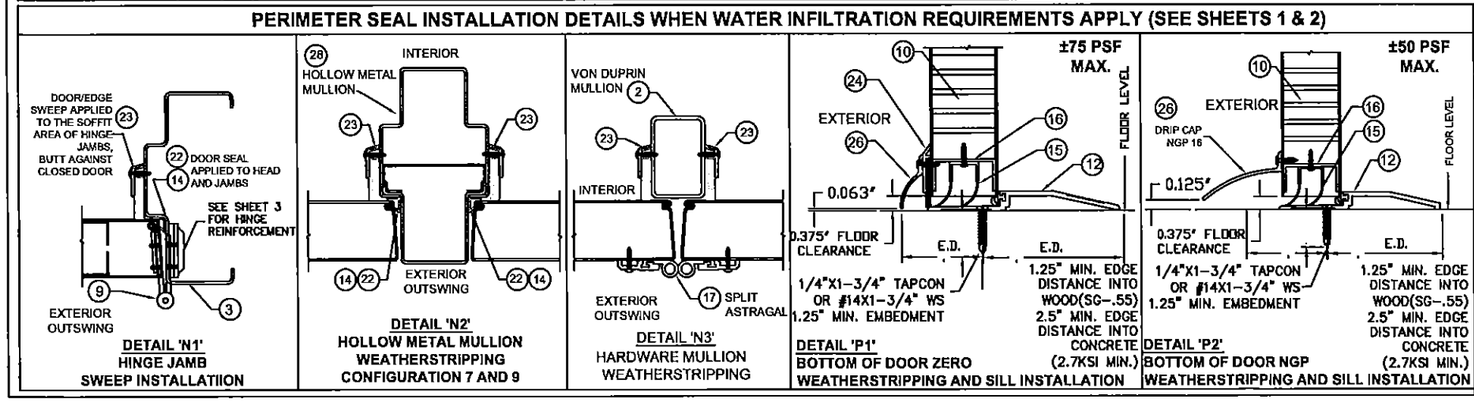

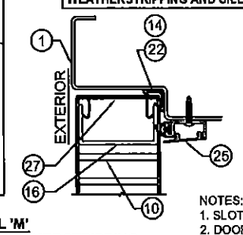

DETAIL 'M'
TOP OF DOOR/HEAD WEATHERSTRIPPING WHEN WATER INFILTRATION REQUIREMENTS APPLY

PRODUCT REVISED as complying with the Florida Building Code Acceptance No. 15-0431.04 Expiration Date 5/5/17 By Lesley L. Chandler Manager Product Control

NOTES:
1. SLOT LOCATIONS MAY VARY WITH DIFFERENT DOOR WIDTH.
2. DOOR SWEEP RIGID SECTION IS MADE OF PRO-FAX #PD-199 POLYPROPYLENE HOMOPOLYMER.
3. DOOR SWEEP FLEXIBLE SECTION IS MADE OF SANTOPRENE #101-73
4. FAS-SEAL DOOR SWEEP (15), AND THRESHOLD (12) ARE REQUIRED FOR ALL INSTALLATIONS.

BEND RADIUS

THIRD ANGLE PROJECTION

SCHLAGE LOCK COMPANY, LLC
6810 HILLSDALE COURT
INDIANAPOLIS, IN 46250

MANUFACTURING FACILITY:
STEELCRAFT
9017 BLUE ASH ROAD
CINCINNATI, OH 45242

TITLE: STEELCRAFT H SERIES DOUBLE OUTSWING GLAZED COMMERCIAL STEEL DOORS WITH AND WITHOUT PANIC EXIT DEVICES

DOUBLE GLASS DOOR PERIMETER SEAL HARDWARE.

DRAWN YMF	DATE 05/20/07		
CHECKED			
APPROVED			
ENG. APPVL JPD	10/11/07		
SIZE FLAT	DWG NO. IRGD07		REV K
SCALE: NTS	AUTOCAD		SHEET 5 of 17

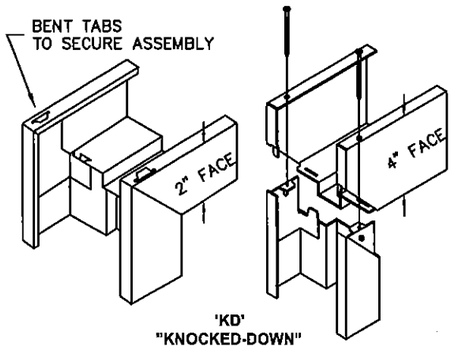

'KD'
"KNOCKED-DOWN"
ASSEMBLY

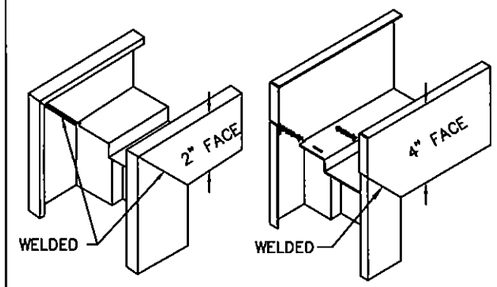

'SUA'
SET-UP AND ARC-WELDED
ASSEMBLY

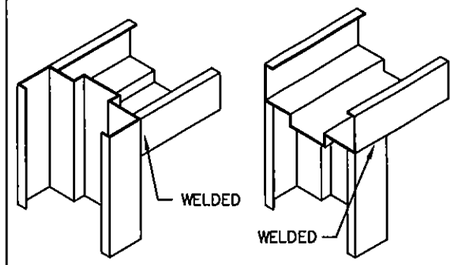

HEAD NOTCHED
AND BUTTED BETWEEN JAMBS

HEAD SITS ON TOP
OF NOTCHED JAMBS

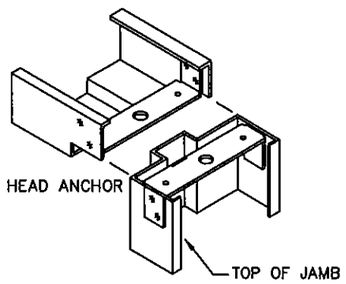

HEAD NOTCHED
AND BOLTED ON TOP OF JAMBS

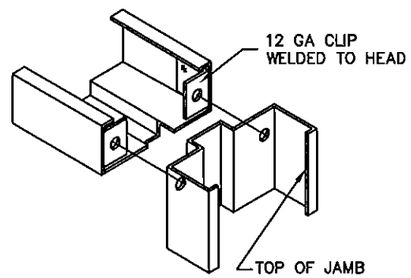

HEAD NOTCHED
AND BOLTED BETWEEN JAMBS

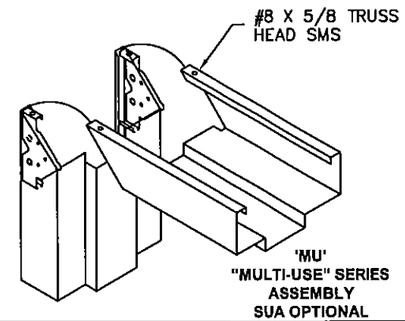

'MU'
"MULTI-USE" SERIES
ASSEMBLY
SUA OPTIONAL

TYPICAL FRAME PROFILE
DOUBLE RABBET

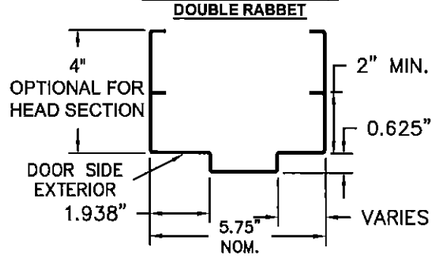

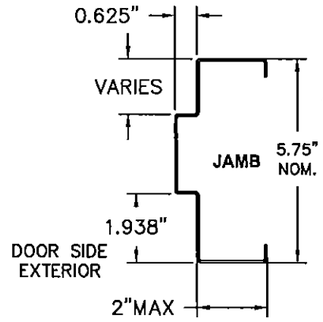

OPTIONAL FRAME PROFILE
SINGLE RABBET

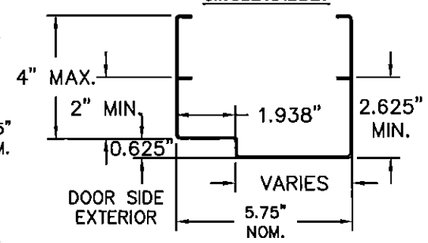

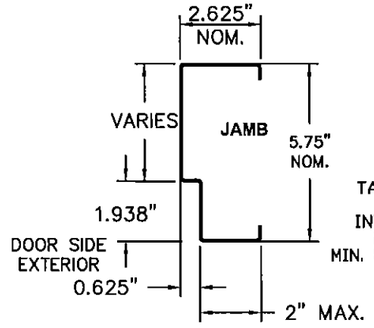

WELD AT JOINT
CONTINUOUS
2' MIN. 4' MAX.
MIG-WELD BEAD
ALONG FACE
BOTH SIDES
980# MIN LOAD
CAPACITY

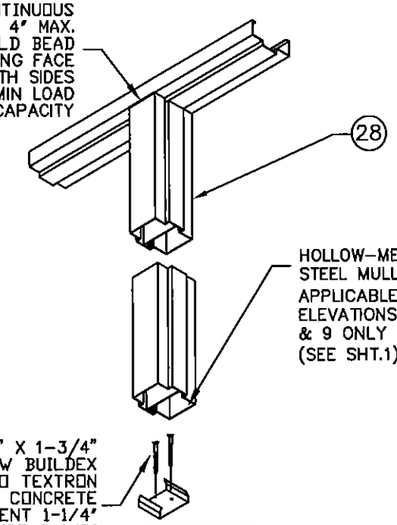

28 FIXED HOLLOW
METAL MULLION
DOUBLE RABBET

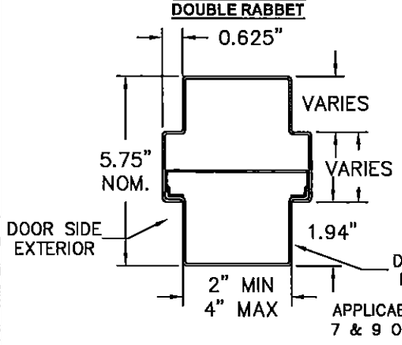

SEE NOTE 4.

28 FIXED HOLLOW
METAL MULLION
SINGLE RABBET

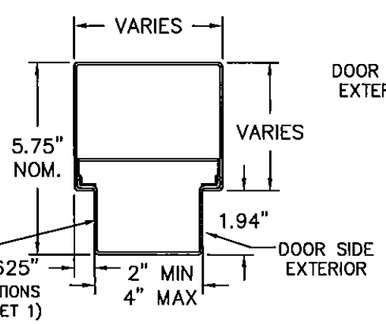

MATERIAL IS PER TABLE 7. MINIMUM THICKNESS IS 0.053" (16 Ga.)
MINIMUM YIELD STRENGTH = 58,000 PSI
MINIMUM TENSILE STRENGTH = 45,700 PSI

PRODUCT REVISED
as complying with the Florida
Building Code
Acceptance No. 15-0930.04
Expiration Date 5/5/17
By Isheryl Wynn
Product Control

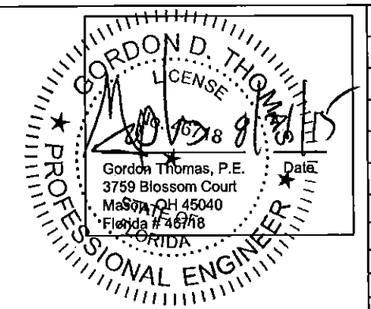

REVISIONS

LTR	DESCRIPTION			DATE	APPROVED
A	APPROVAL	DWG	YMF	05/20/07	
B	REVISED	DWG	RAP	11/26/07	
C	REVISED	DWG	RAP	12/14/07	
D	REVISED	DWG	YMF	12/14/08	
E	REVISED	PER_MDBCCO	YMF	02/05/09	
F	REVISED	PER-MDBCCO	YMF	01/04/10	
G	REVISED	PER_MDBCCO	YMF	04/08/10	
H	REVISED	NAME	JPD	11/01/13	
J	REVISED	DWG	JPD	02/01/15	
K	REVISED	DWG	JPD	05/05/15	

TABLE 7. STEEL MECHANICAL PROPERTIES

MATERIAL	ASTM REF.	YIELD KSI	TENSILE KSI
CRS	A366	MIN. 41.5	MIN. 52.4
HRS	A1011		
GALV: A60	A924		
SS: 304,316	A240	MIN. 41.5	MIN. 73.2

TABLE 6. AVAILABLE STEELCRAFT FRAME CONFIGURATIONS

FRAME SERIES	JAMB DEPTH	MAX. OPENING SIZE WIDTH	MAX. OPENING SIZE HEIGHT	MATERIAL DESCR.	MATERIAL GA./MIN. THK
F	5.75" NOM.	8'0"	8'0"	CRS/HRS GALV	16/.053" 14/.067" 12/.099"
				STAINLESS STEEL	16/.053"
MU	5.75" NOM.	8'0"	8'0"	CRS/HRS GALV	16/.053" 14/.067"

TABLE 5. AVAILABLE STEELCRAFT DOOR CONFIGURATIONS

CORE MATERIAL PER SHT.15	MAXIMUM OPENING SIZE WIDTH / HEIGHT	SKIN MATERIAL DESCR.	SKIN MATERIAL GA./MIN. THK
HONEYCOMB POLYSTYRENE POLYURETHANE (POLYISOCYANURATE) TEMPERATURE RISE STEEL STIFFENED	VARIES SEE SHEET 2 TABLE 1	CRS GALV	16/.053" 14/.067"
HONEYCOMB POLYSTYRENE POLYURETHANE	VARIES SEE SHEET 2 TABLE 1	STAINLESS STEEL	16/.053"

NOTES:

1. DOOR CONSTRUCTION
1.1. NOMINAL DOOR THICKNESS – 1 3/4"
1.2. DOOR SIZE MAY VARY, SUBJECTED TO COMPLIANCE WITH FLORIDA BUILDING CODE AND PRODUCT AVAILABILITY FROM MANUFACTURER (SEE SHEET 2 FOR AVAILABLE HARDWARE)
2. FRAME CONSTRUCTION
2.1. NOMINAL JAMB DEPTH – 5 3/4", STOP HEIGHT – 5/8"
2.2. FRAMES AVAILABLE AS FLUSH (F–SERIES) AND MULT–USE (MU–SERIES) (SEE TABLE 6)
3. FOR MATERIAL SPECIFICATIONS REFERENCE SEE TABLE 7.

BEND RADIUS

THIRD ANGLE PROJECTION

DRAWN	YMF	DATE 05/20/07
CHECKED		
APPROVED		
ENG. APPVL	JPD	10/12/07

SCHLAGE LOCK COMPANY, LLC
6810 HILLSDALE COURT
INDIANAPOLIS, IN 46250

MANUFACTURING FACILITY:
STEELCRAFT
9017 BLUE ASH ROAD
CINCINNATI, OH 45242

TITLE: STEELCRAFT H SERIES DOUBLE OUTSWING GLAZED COMMERCIAL STEEL DOORS WITH AND WITHOUT PANIC EXIT DEVICES

FRAME PROFILE, CORNER DETAILS AND DOOR FRAME MATERIAL, AND SIZE OPTIONS

SIZE	FLAT	DWG NO.	REV
		IRGD07	K

SCALE: NTS | AUTOCAD | SHEET 6 OF 17

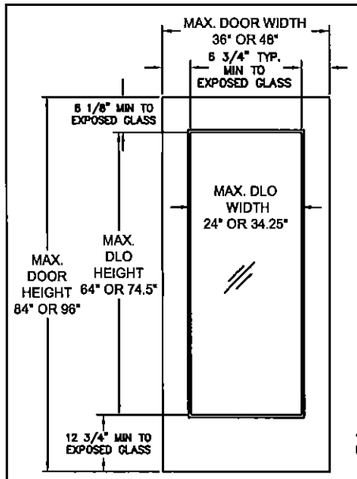

FG-LITE
FULLY GLAZED

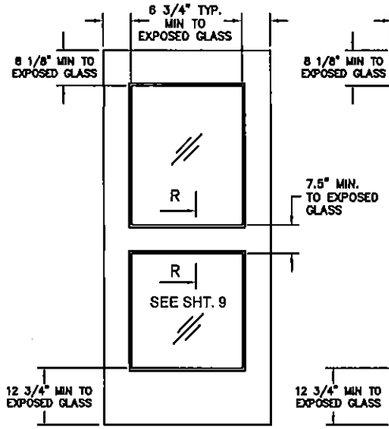

FG2-LITE
HORIZONTAL MID-RAIL

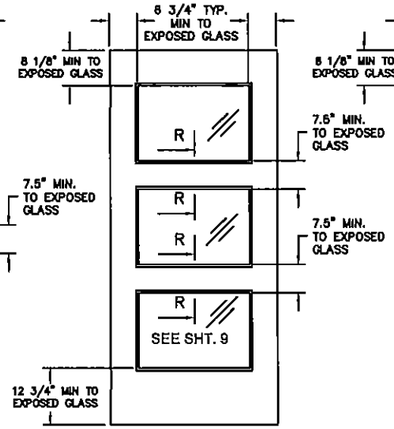

FG3-LITE
2 HORIZONTAL MID-RAILS

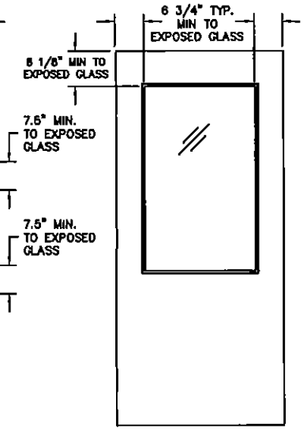

G-LITE
HALF GLASS

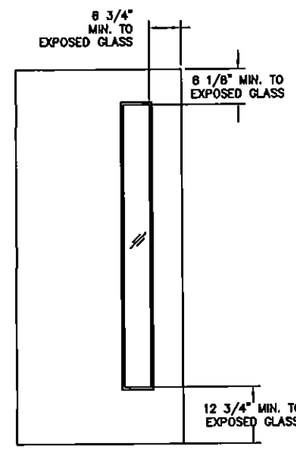

LNL
LONG NARROW LITE

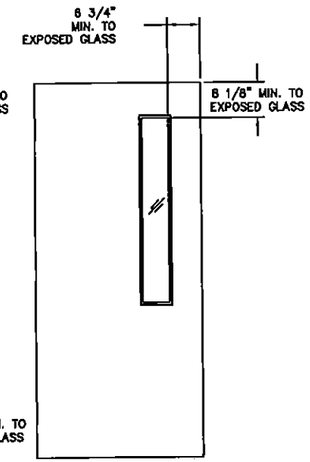

N
NARROW LITE

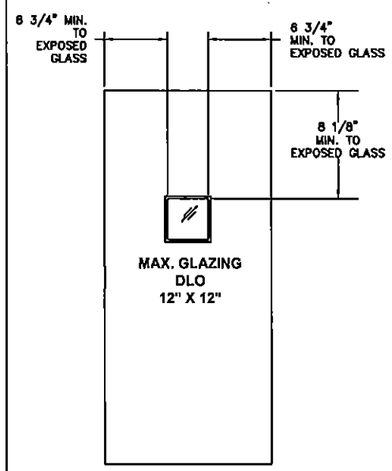

V
VISION LITE

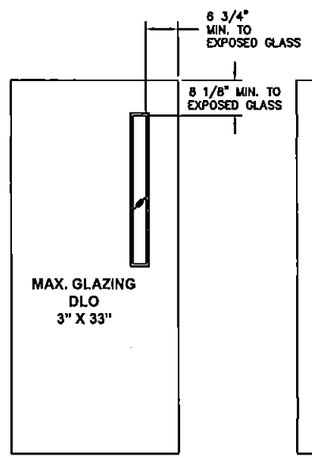

N3

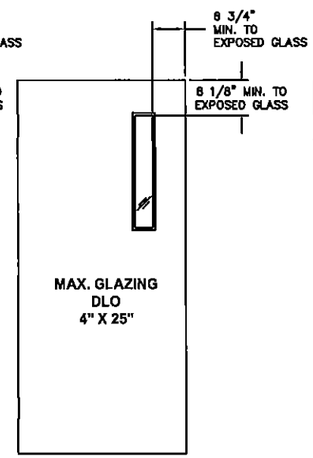

N4

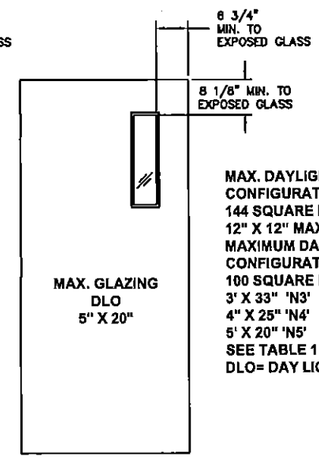

N5

MAX. DAYLIGHT OPENING FOR CONFIGURATION 3A IS 144 SQUARE INCHES
12" X 12" MAX. 'V' VISION LITE
MAXIMUM DAYLIGHT OPENING FOR CONFIGURATION 3B IS 100 SQUARE INCHES DLO
3' X 33" 'N3'
4" X 25" 'N4'
5' X 20" 'N5'
SEE TABLE 1 SHEET 2
DLO= DAY LIGHT OPENING

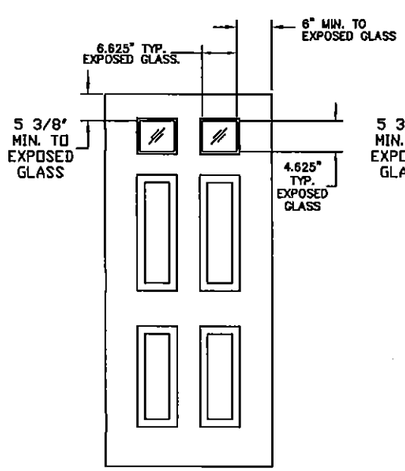

E4 TL

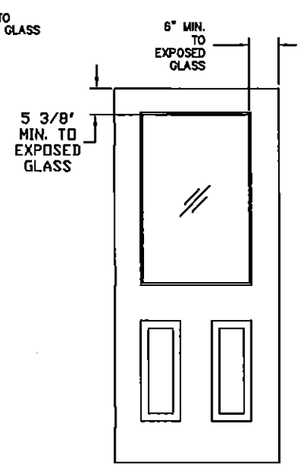

E2 G

EMBOSSED PANEL DOORS

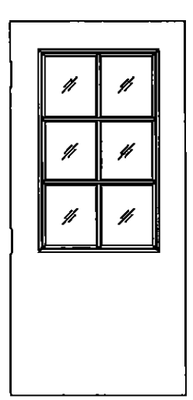

SURFACE APPLIED MUNTINS
(FALSE DIVIDERS)
MUNTIN ARRANGEMENT
MAY VARY

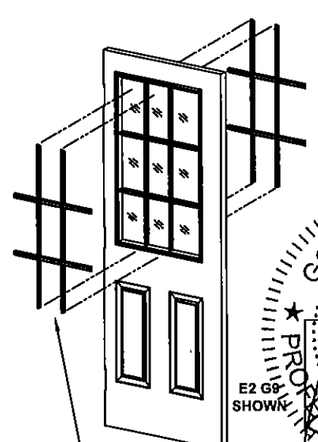

E2 G8
SHOWN

MUNTIN ASSEMBLY
SURFACE MOUNTED
TO THE GLASS

GORDON D. THOMAS
LICENSE
No. 46718
STATE OF FLORIDA
PROFESSIONAL ENGINEER

Gordon Thomas, P.E.
3759 Blossom Court
Mason, OH 45040
Florida # 46718
Date

NOTES:

1. DOOR CONSTRUCTION
2. NOMINAL DOOR THICKNESS – 1 3/4"
3. ALL GLASS LITE TYPES SHOWN ON THIS SHEET ARE AVAILABLE FOR ALL DOOR CONFIGURATIONS SHOWN ON SHEET 1 AND TABLE 1 SHEET 2 EXCEPT FOR CONFIGURATIONS 3A AND 3B. SEE NOTE 4
4. DOOR CONFIGURATION 3A AVAILABLE WITH 'V' VISION LITE AND 3B IS AVAILABLE WITH N3, N4 AND N5 TYPE LITE. (SEE TABLE 1 SHEET 2)
5. MAXIMUM GLAZING DLO HEIGHT AND WIDTH AS PER SHEETS 1, 2, AND 7.
6. GLAZING OPENING DLO SIZE WILL CHANGE IN PROPORTION WITH DOOR SIZE.(SEE TABLE 1 SHEET 2 FOR LIMITATIONS)
7. DOOR SIZE MAY VARY, SUBJECTED TO COMPLIANCE WITH FLORIDA BUILDING CODE AND PRODUCT AVAILABILITY FROM MANUFACTURER.
8. GLASS LITES NOT LIMITED TO THOSE SHOWN, PROVIDED DIMENSIONS SHOWN ARE MAINTAINED. SEE TABLE 1 SHEET 2)
9. DOORS WITH MULTIPLE GLASS LITES ARE NOT LIMITED TO THE DESIGNS SHOWN, PROVIDED THE DIMENSIONS SHOWN ARE MAINTAINED.(SEE TABLE 1 SHEET 2 FOR LIMITATIONS)
10. WHEN USING A CONTINUOUS HINGE THE MINIMUM DISTANCE FROM THE EDGE OF THE DOOR TO EXPOSED GLASS IS 6-1/4" AT STILES AND 7-1/2" AT MID RAIL.
11. DLO = DAYLIGHT OPENING (SEE TABLE 1 SHEET 2 FOR LIMITATIONS)

REVISIONS

LTR	DESCRIPTION			DATE	APPROVED
A	APPROVAL	DWG	YMF	05/20/07	
B	REVISED	DWG	RAP	11/26/07	
C	REVISED	DWG	RAP	12/12/07	
D	REVISED	DWG	YMF	12/15/08	
E	REVISED	PER_MDBCCO	YMF	12/15/08	
F	REVISED	PER_MDBCCO	YMF	01/04/10	
G	REVISED	PER_MDBCCO	YMF	04/08/10	
H	REVISED	NAME	JPD	11/01/13	
J	REVISED	DWG	JPD	02/01/15	
K	REVISED	DWG	JPD	05/05/15	

PRODUCT REVISED
as complying with the Florida
Building Code
Acceptance No. 15-0930.04
Expiration Date 5/5/17
Approved Date Product Control

BEND RADIUS

THIRD ANGLE PROJECTION

DRAWN YMF	DATE 05/20/07
CHECKED	
APPROVED	
ENG. APPVL JPD	11/15/07

SCHLAGE LOCK COMPANY, LLC
6810 HILLSDALE COURT
INDIANAPOLIS, IN 46250

MANUFACTURING FACILITY:
STEELCRAFT
9017 BLUE ASH ROAD
CINCINNATI, OH 45242

TITLE: STEELCRAFT H SERIES DOUBLE OUTSWING GLAZED COMMERCIAL STEEL DOORS WITH AND WITHOUT PANIC EXIT DEVICES

GLASS DOOR CONFIGURATIONS.

SIZE	FLAT	DWG NO.	REV
		IRGD07	K

SCALE: NTS | AUTOCAD | SHEET 7 of 17

GLAZING TYPE 1

GLAZING DETAIL 'D'
DEZIGNER TRIM OPTION

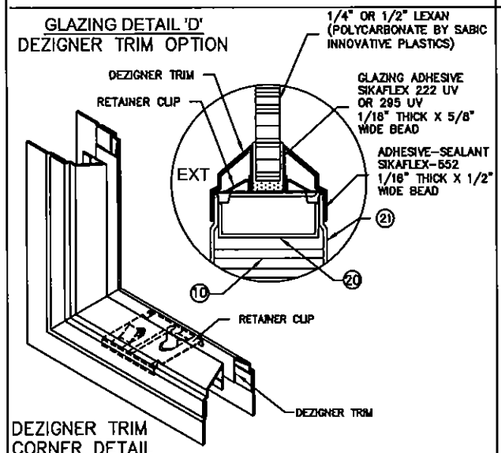

DEZIGNER TRIM
CORNER DETAIL

GLAZING TYPE 1

GLAZING DETAIL 'E'
STEEL TRIM OPTION

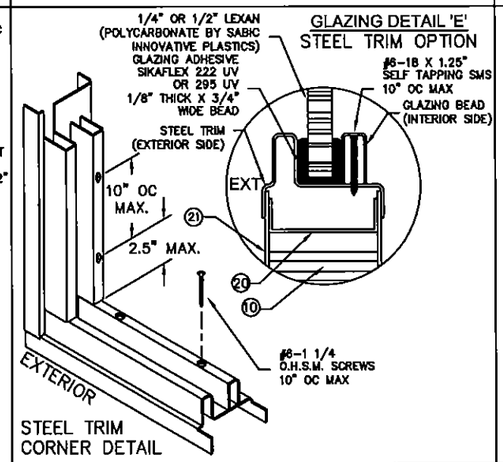

STEEL TRIM
CORNER DETAIL

GLAZING TYPE 2

GLAZING DETAIL 'K'
LAMINATED GLASS

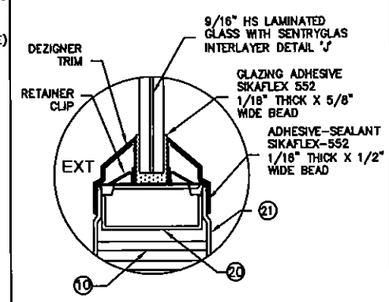

DEZIGNER TRIM

GLAZING TYPE 2

GLAZING DETAIL 'L'
LAMINATED GLASS

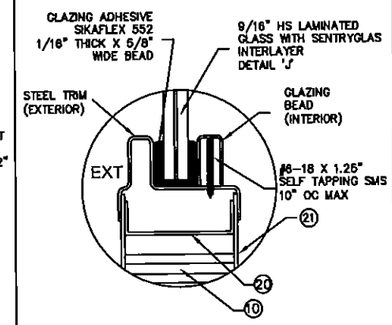

STEEL TRIM

REVISIONS

LTR	DESCRIPTION			DATE	APPROVED
A	APPROVAL	DWG.	YMF	05/20/07	
B	REVISED	DWG.	RAP	11/26/07	
C	REVISED	DWG.	RAP	12/12/07	
D	REVISED	DWG.	YMF	12/15/08	
E	REVISED	PER_MDBCCO	YMF	12/15/08	
F	REVISED	PER_MDBCCO	YMF	01/04/10	
G	REVISED	PER_MDBCCO	YMF	04/08/10	
H	REVISED	NAME	JPD	11/01/13	
J	REVISED	DWG	JPD	02/01/15	
K	REVISED	DWG	JPD	05/05/15	

LAMINATED GLASS DETAILS

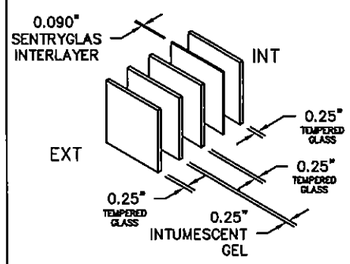

CONSTRUCTION DETAIL 'H'
INTUMESCENT GLASS
1-1/16" SUPERLITE II-XL™
BY SAFTI
WITH SENTRYGLAS INTERLAYER

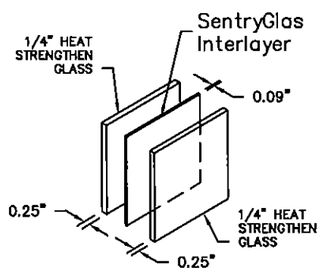

CONSTRUCTION DETAIL 'J'
9/16" HS LAMINATED GLASS WITH
SENTRYGLAS INTERLAYER

GLAZING TYPE 3

GLAZING DETAIL 'F'
VISION FRAME OPTION

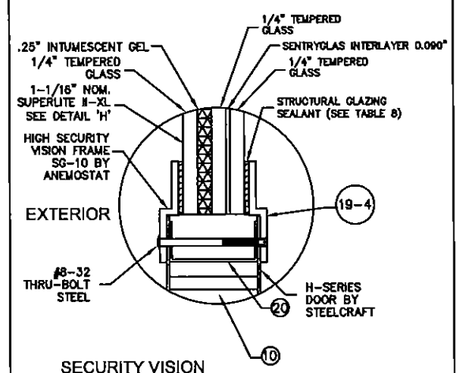

SECURITY VISION
FRAME SG-10 BY ANEMOSTAT
PROFILE SHOWN FOR 1-1/16" GLASS

GLAZING TYPE 3

GLAZING DETAIL 'G'
1" STEEL TRIM OPTION

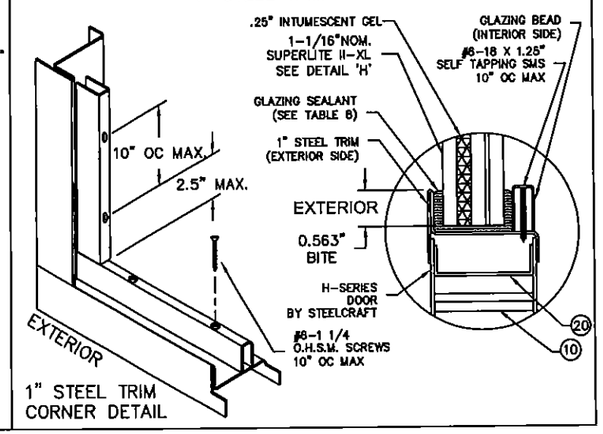

1" STEEL TRIM
CORNER DETAIL

TABLE 8.

GLAZING TYPES AND METHODS

TYPE	GLAZING MATERIAL	TRIM TYPE	GLAZING SEALANT
1	LEXAN BY SABIC INNOVATIVE PLASTICS 1/4" OR 1/2" DETAILS 'D' & 'E'	DEZIGNER 1/2" OR 1/4"	SIKAFLEX 222UV OR 295UV 1/16" X 5/8" BEAD
		STEEL TRIM	
2	9/16" HS LAMINATED GLASS WITH SENTRYGLAS INTERLAYER DETAILS 'J', 'K' & 'L'	DEZIGNER 1/2"	SIKAFLEX 552 OR DOW CORNING 995/983 1/16" X 5/8" BEAD
		STEEL TRIM	
		1" STEEL TRIM	
3	1-1/16" SUPERLITE II-XL™ BY SAFTI WITH SENTRYGLAS INTERLAYER and DETAILS 'H', 'F' & 'G'	1" STEEL TRIM (DETAIL 'G')	SIKAFLEX 552 OR DOW CORNING 995/983 1/16" X 5/8" BEAD
		SECURITY VISION FRAME SG-10 BY ANENEMOSTAT (DETAIL 'F')	

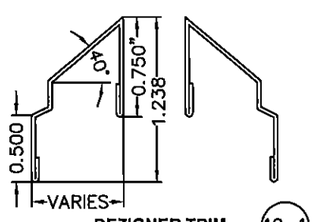

DEZIGNER TRIM PROFILE (19-1)
MATERIAL: 24 GA A40 STEEL

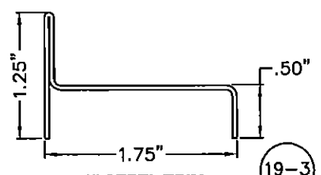

1" STEEL TRIM (19-3)
MATERIAL: 20 GAGE A40 STEEL

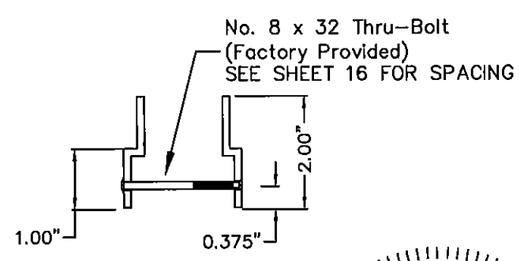

HIGH SECURITY METAL VISION FRAME (19-4)
MATERIAL: 12 GAGE ANEMOSTAT SG-10

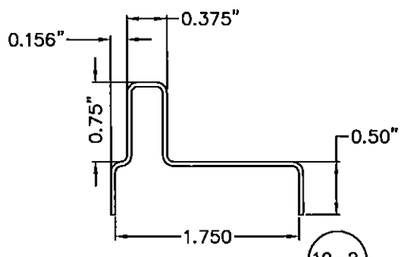

STEEL TRIM (19-2)
MATERIAL: 20GA A40 STEEL

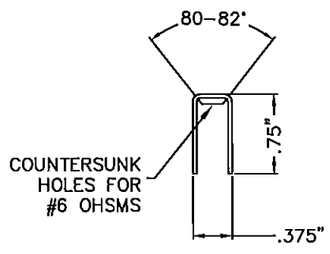

GLAZING BEAD FOR STEEL OVERLAPPING TRIMS
20 GAGE A40 STL

NOTES:

1. SEE SHT.1 FOR ELEVATIONS, SHT.2 FOR SIZES AND SHT.6 FOR DOOR & FRAME MATERIAL SPECIFICATIONS.
2. SEE SHT.3 NOTE 2. AND SHEET 4 FOR ANCHOR REQUIREMENTS
3. SEE SHT. 4 & 17 FOR WALL CONSTRUCTION AND ANCHORING SYSTEM
4. SEE SHT. 6 FOR AVAILABLE OPENING SIZES, JAMB DEPTHS AND SPECIFICATIONS
5. APPROVED HARDWARE ON SHEETS 1, 2, 3, 5, 9, 10, 11, 12, AND 16 TO BE INSTALLED PER MANUFACTURER'S INSTALLATION INSTRUCTIONS.

PRODUCT REVISED
as complying with the Florida Building Code
Acceptance No. 15-0930.04
Expiration Date 5/5/17
By [signature]
Miami-Dade Product Control

GORDON D. THOMAS
LICENSE
No. 46718
STATE OF FLORIDA
PROFESSIONAL ENGINEER
Gordon Thomas P.E.
3759 Blossom Court
Mason, OH 45040
Florida # 46718
Date 9/3/

BEND RADIUS

THIRD ANGLE PROJECTION

DRAWN	YMF	DATE 05/20/07
CHECKED		
APPROVED		
ENG. APPVL	JPD	11/15/07

SCHLAGE LOCK COMPANY, LLC
6810 HILLSADLE COURT
INDIANAPOLIS, IN 46250

MANUFACTURING FACILITY:
STEELCRAFT
9017 BLUE ASH ROAD
CINCINNATI, OH 45242

TITLE: STEELCRAFT H SERIES DOUBLE OUTSWING GLAZED COMMERCIAL STEEL DOOR WITH AND WITHOUT PANIC EXIT DEVICES

GLASS TRIM OPTIONS.

SIZE	FLAT	DWG NO.	REV
		IRGD07	K
SCALE: NTS	AUTOCAD	SHEET 8 of 17	

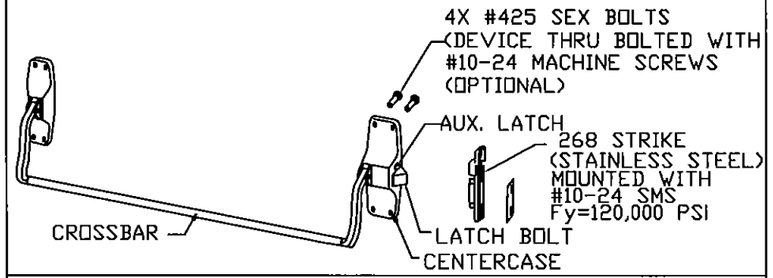

VON DUPRIN 88-F RIM DEVICE, USED IN CONFIGURATIONS: 1 & 2

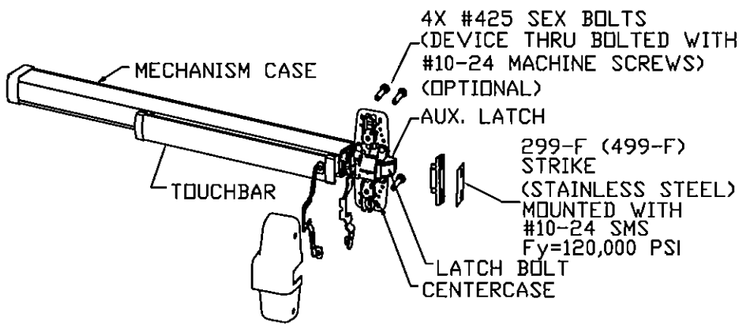

VON DUPRIN 98/99(F) RIM DEVICE
USED IN CONFIGURATIONS: 1 & 2

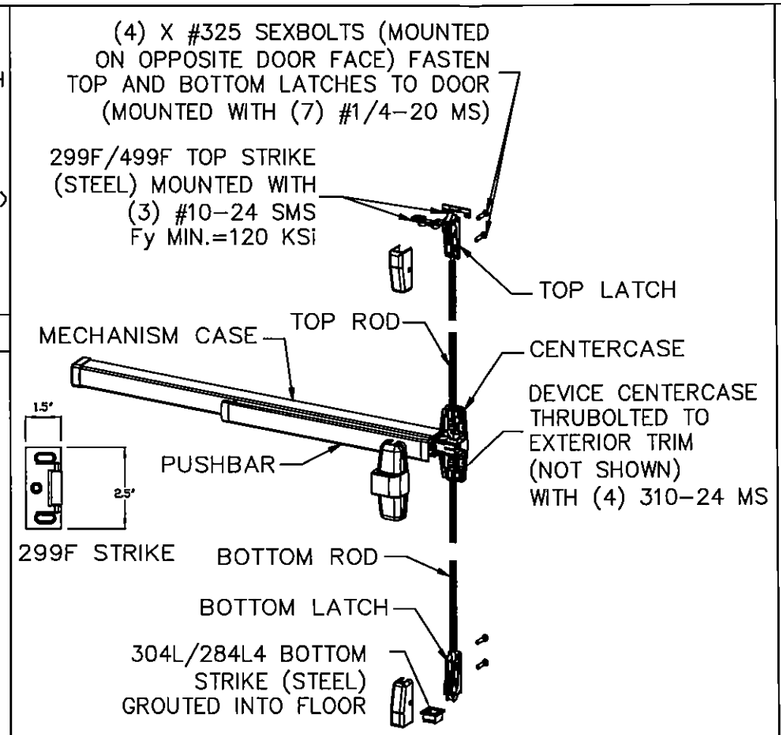

VON DUPRIN 98/9927(F) SURFACE VERTICAL ROD DEVICE
USED IN CONFIGURATIONS: 4

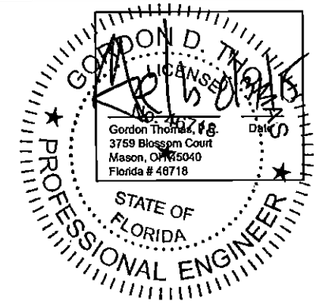

REVISIONS				
LTR	DESCRIPTION		DATE	APPROVED
A	APPROVAL DWG	YMF	05/20/07	
C	REVISED DWG	RAP	12/14/07	
D	REVISED DWG	YMF	12/14/08	
E	REVISED PER_MDBCCD	YMF	02/05/09	
F	REVISED PER_MDBCCD	YMF	01/04/10	
G	REVISED PER_MDBCCD	YMF	04/08/10	
H	REVISED NAME	JPD	11/01/13	
J	REVISED DWG	JPD	02/01/15	
K	REVISED DWG	JPD	05/05/15	

GLAZING MATERIAL SEE TABLE 8 ON SHEET 8.
SEE SHEETS 1, 2, 3 AND 7 FOR INFORMATION ON
DAYLIGHT OPENING, GLASS TYPES AND SIZE
LIMITATIONS

SECTION R-R
HORIZONTAL MID-RAIL

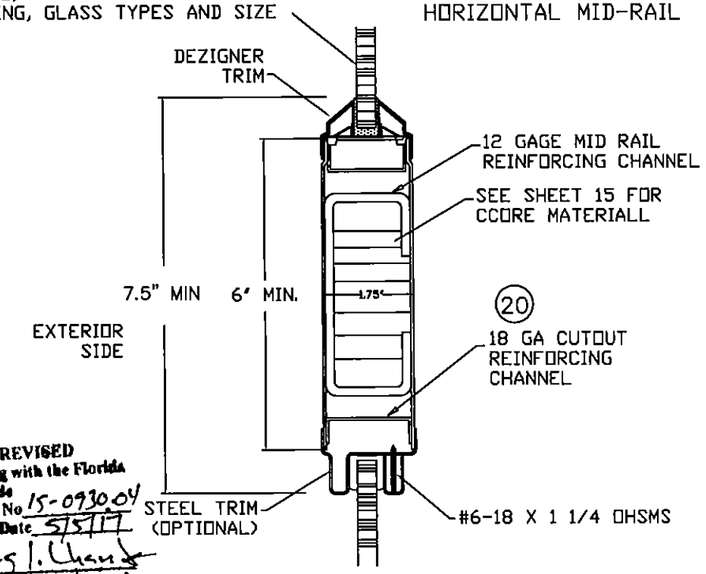

PRODUCT REVISED
as complying with the Florida
Building Code
Acceptance No. 15-0930.04
Expiration Date 5/5/17
By Isaac J. Chan
Miami-Dade Product Control

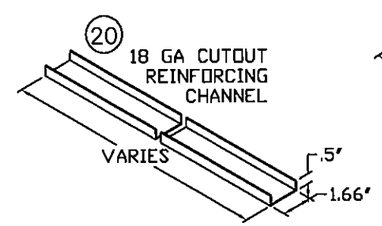

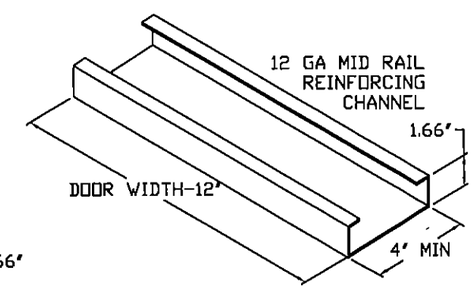

NOTES:
1. ELECTRICAL FUNCTIONS/INSTALLATION AND FIRE RATINGS ARE NOT PART OF THIS APPROVAL AND TO BE REVIEWED AND APPROVED BY BUILDING OFFICIAL.
2. EXIT HARDWARE OPTIONS:
FOR 98/99 & XP98/99 SERIES - FUNCTIONS E, RX, LX, SS, EL, CX, F; TRIM: ALL APPLICABLE TRIMS AVAILABLE.
FOR 88-F SERIES - FUNCTION E; TRIM: ALL APPLICABLE TRIMS AVAILABLE. PN MODEL OFFERED.
TRIM: ALL APPLICABLE TRIMS AVAILABLE.

BEND RADIUS

THIRD ANGLE PROJECTION

DRAWN YMF	DATE 05/20/07
CHECKED	CDATE
APPROVED	ADATE
ENG. APPVL JPD	EDATE 11/15/07

SCHLAGE LOCK COMPANY, LLC
6810 HILLSDALE COURT
INDIANAPOLIS, IN 46250

MANUFACTURING FACILITY:
STEELCRAFT
9017 BLUE ASH ROAD
CINCINNATI, OH 45242

TITLE: STEELCRAFT H SERIES DOUBLE OUTSWING GLAZED COMMERCIAL STEEL DOORS WITH AND WITHOUT PANIC EXIT DEVICES

EXIT HARDWARE FOR GLASS DOUBLE DOORS.

SIZE	FLAT	DWG NO. IRGD07	REV K
SCALE: NTS	AUTOCAD		SHEET 9 OF 17

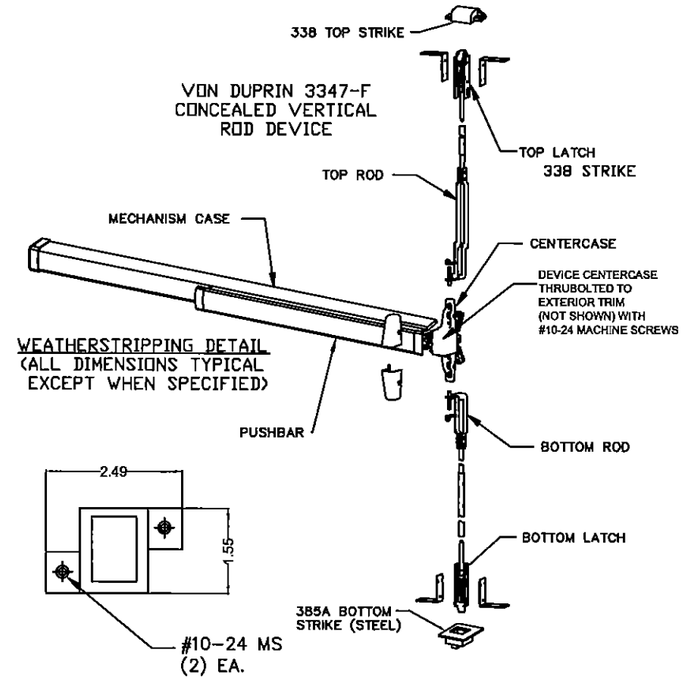

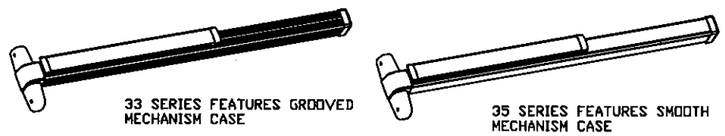

VON DUPRIN 33/3547-F CONCEALED VERTICAL ROD DEVICE
USED IN CONFIGURATIONS: 5

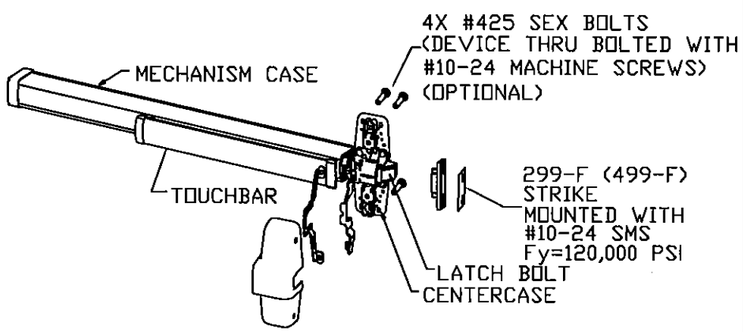

VON DUPRIN XP98/99(F) RIM DEVICE
USED IN CONFIGURATIONS: 3A & 3B

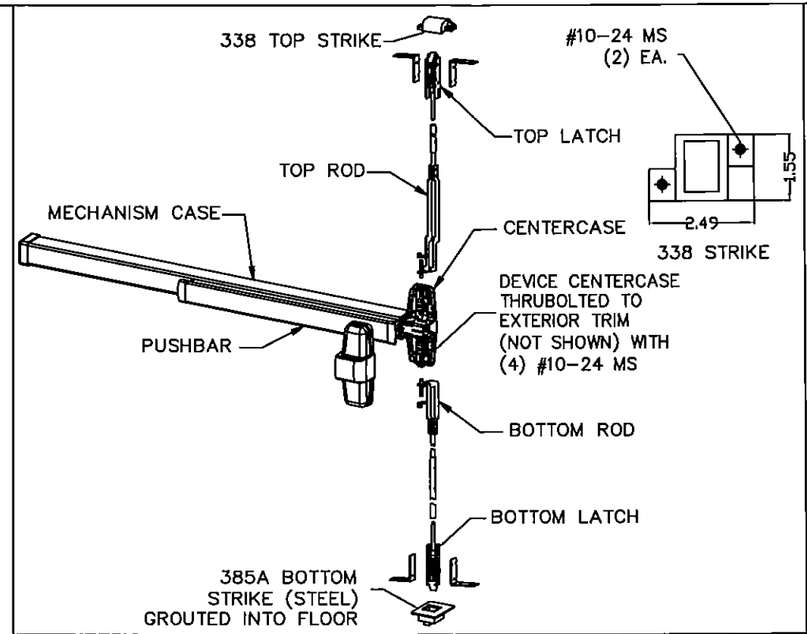

VON DUPRIN 98/9947-F (CONCEALED) VERTICAL ROD
USED IN CONFIGURATION: 5

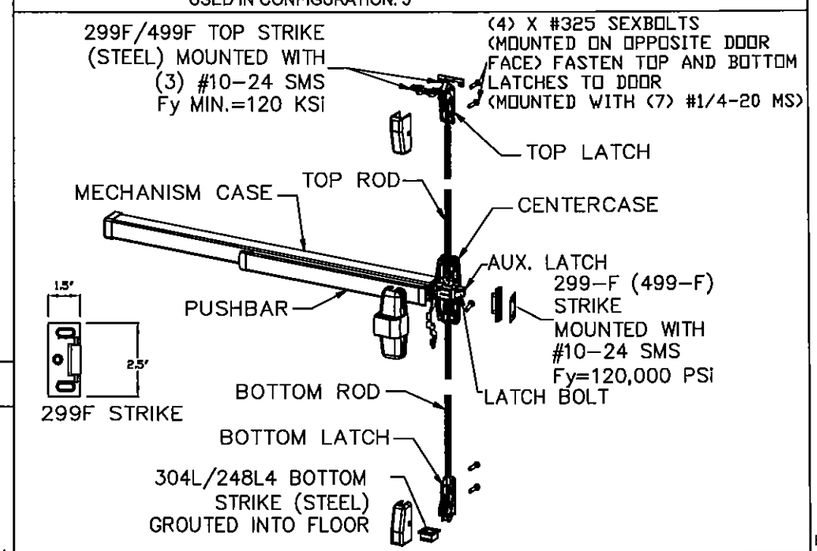

VON DUPRIN 98/9957(F) THREE POINT EXIT DEVICE
USED IN CONFIGURATIONS: 6, 7, 8 & 9

GORDON D. THOMAS
LICENSE
No. 45718
STATE OF FLORIDA
PROFESSIONAL ENGINEER
Gordon Thomas, P.E.
3759 Blossom Court
Mason, OH 45040
Florida #45718
Date

REVISIONS					
LTR	DESCRIPTION			DATE	APPROVED
A	APPROVAL	DWG	YMF	05/20/07	
C	REVISED	DWG	RAP	12/14/07	
D	REVISED	DWG	YMF	12/14/08	
E	REVISED	PER_MDBCCD	YMF	02/05/09	
F	REVISED	PER_MDBCCD	YMF	01/04/10	
G	REVISED	PER_MDBCCD	YMF	04/08/10	
H	REVISED	NAME	JPD	11/01/13	
J	REVISED	DWG	JPD	02/01/15	
K	REVISED	DWG	JPD	05/05/15	

PRODUCT REVISED
as complying with the Florida Building Code
Acceptance No. 15-0930.04
Expiration Date 5/5/17
By [signature]
Miami Dade Product Control

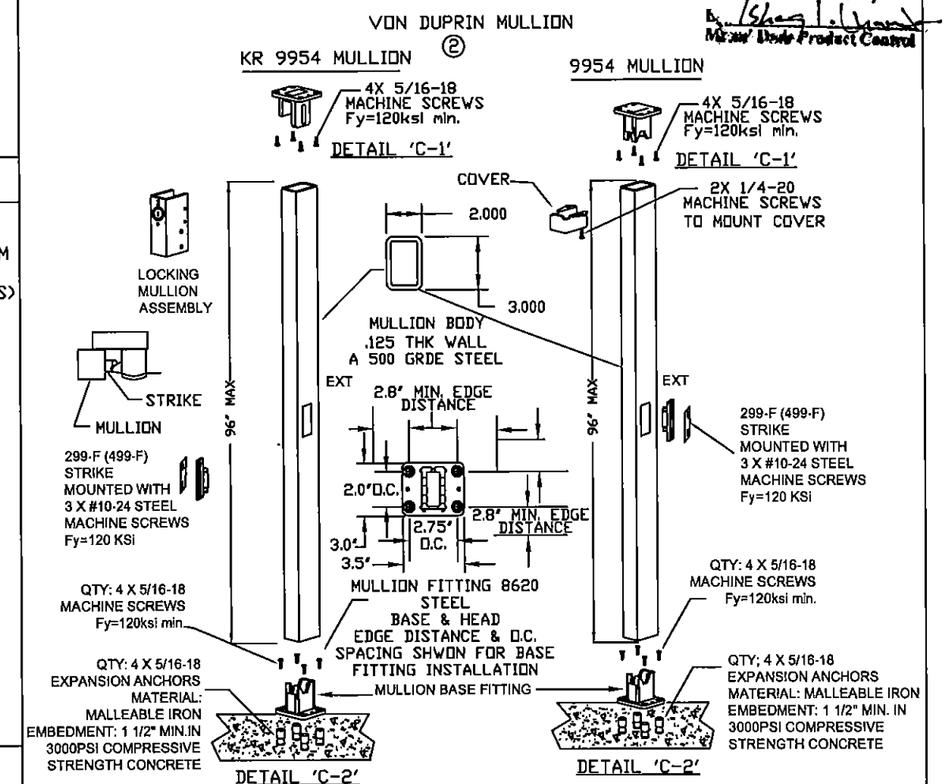

NOTE: ELECTRICAL FUNCTIONS/INSTALLATION AND FIRE RATINGS ARE NOT PART OF THIS APPROVAL AND TO BE REVIEWED AND APPROVED BY BUILDING OFFICIAL.
EXIT HARDWARE OPTIONS:
FOR 98/99 & XP98/99 SERIES - FUNCTIONS E, RX, LX, SS, EL, CX, F
(OPTIONS MAY VARY PER SERIES)
TRIM: ALL APPLICABLE TRIMS AVAILABLE.
FOR 33/35-F SERIES - FUNCTIONS RX, LX, EL, SS
TRIM: ALL APPLICABLE TRIMS AVAILABLE.

BEND RADIUS
THIRD ANGLE PROJECTION

DRAWN YMF	DATE 05/20/07
CHECKED	
APPROVED	
ENG. APPVL JPD	11/15/07

SCHLAGE LOCK COMPANY, LLC
6810 HILLSDALE COURT
INDIANAPOLIS, IN 46250

MANUFACTURING FACILITY:
STEELCRAFT
9017 BLUE ASH ROAD
CINCINNATI, OH 45242

TITLE: STEELCRAFT H SERIES DOUBLE OUTSWING GLAZED COMMERCIAL STEEL DOORS WITH AND WITHOUT PANIC EXIT DEVICES

EXIT HARDWARE FOR GLASS DOUBLE DOORS.

SIZE	FLAT	DWG NO.	REV
		IRGD07	K
SCALE: NTS	AUTOCAD		SHEET 10 OF 17

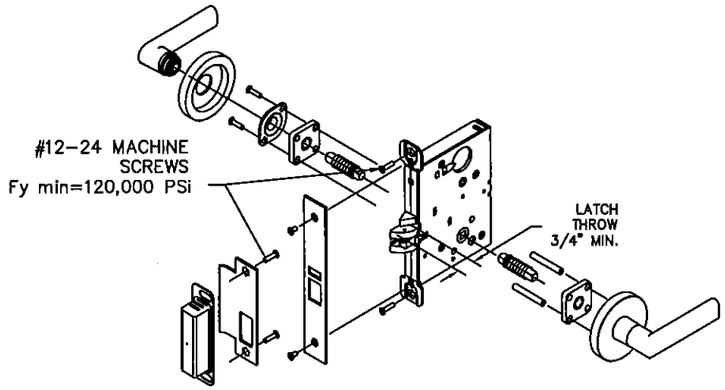

SCHLAGE L/LV 9000 SERIES MORTISE LOCKSET W/O DEADBOLT
USED IN CONFIGURATIONS: 10

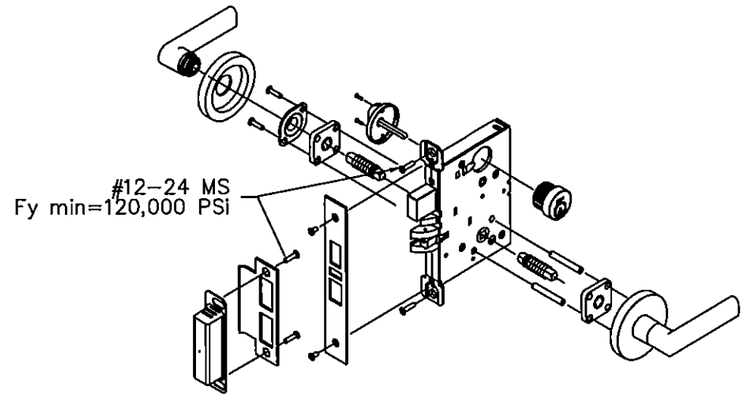

SCHLAGE L/LV 9400 SERIES MORTISE LOCKSET W/ DEADBOLT
USED IN CONFIGURATIONS: 10

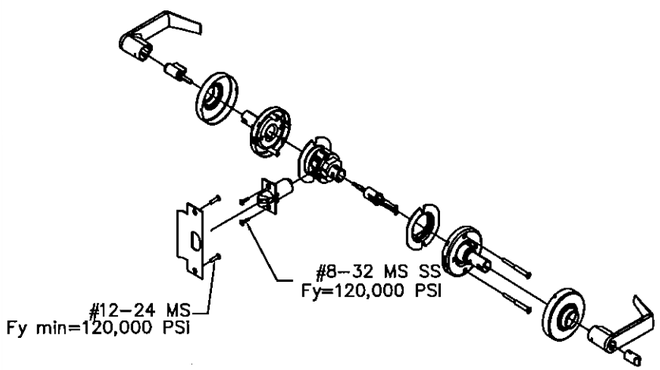

SCHLAGE D/ND-SERIES CYLINDRICAL LEVER LOCKSET
(MIN. 1/2" THROW LATCH). USED IN CONFIGURATIONS: 11

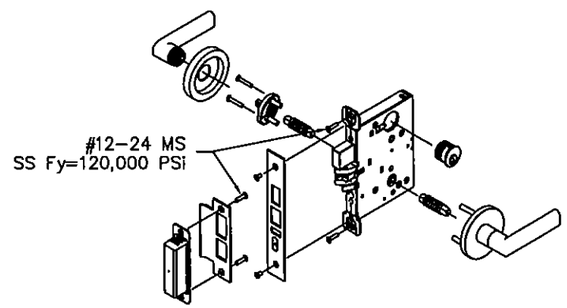

FALCON M-SERIES MORTISE LOCKSET W/ DEADBOLT SHOWN
USED IN CONFIGURATIONS: 10

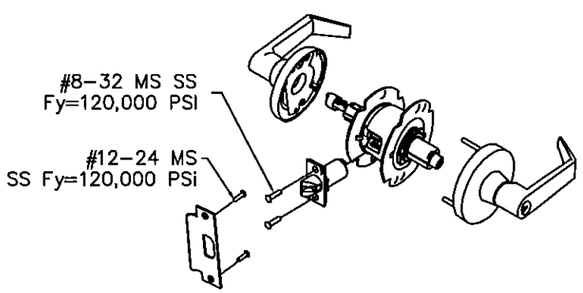

FALCON, T-SERIES CYLINDRICAL LEVER LOCKSET
(MIN. 1/2" THROW LATCH). USED IN CONFIGURATIONS: 11

GORDON D. THOMAS
LICENSE No 46718
Gordon Thomas, P.E.
3759 Blossom Court
Mason, OH 45040
Florida # 46718
Date 11/15/07
STATE OF FLORIDA
PROFESSIONAL ENGINEER

REVISIONS					
LTR	DESCRIPTION			DATE	APPROVED
A	APPROVAL	DWG	YMF	05/20/07	
B	REVISED	DWG	RAP	11/26/07	
C	REVISED	DWG	RAP	12/14/07	
D	REVISED	DWG	YMF	12/14/08	
E	REVISED	PER_MDBCCO	YMF	02/05/09	
F	REVISED	DWG	YMF	12/18/09	
G	REVISED	PER_MDBCCO	YMF	04/08/10	
H	REVISED	NAME	JPD	11/01/13	
J	REVISED	DWG	JPD	02/01/15	
K	REVISED	DWG	JPD	05/05/15	

PRODUCT REVISED
as complying with the Florida
Building Code
Acceptance No. 15-0930.04
Expiration Date 5/5/17
By [signature]
Miami-Dade Product Control

NOTE:

ELECTRICAL FUNCTIONS/INSTALLATION
AND FIRE RATINGS ARE NOT PART OF THIS
APPROVAL AND TO BE REVIEWED AND
APPROVED BY BUILDING OFFICIAL.

BEND RADIUS

THIRD ANGLE PROJECTION

DRAWN YMF	DATE 05/20/07
CHECKED	
APPROVED	
ENG. APPVL JPD	11/15/07

SCHLAGE LOCK COMPANY, LLC
6810 HILLSDALE COURT
INDIANAPOLIS, IN 46250

MANUFACTURING FACILITY:
STEELCRAFT
9017 BLUE ASH ROAD
CINCINNATI, OH 45242

TITLE: STEELCRAFT H SERIES DOUBLE OUTSWING GLAZED COMMERCIAL STEEL DOORS WITH AND WITHOUT PANIC EXIT DEVICES

HARDWARE FOR GLASS DOUBLE DOORS.

SIZE	FLAT	DWG NO.	REV
		IRGD07	K

SCALE: NTS | AUTOCAD | SHEET 11 OF 17

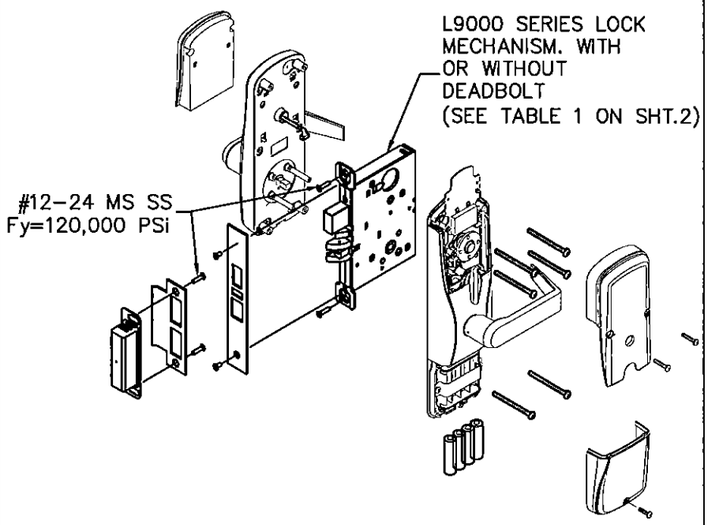

SCHLAGE CO/AD MD OR MS SERIES MORTISE LOCKSET
USED IN CONFIGURATIONS: 10 (SEE SHT. 1)

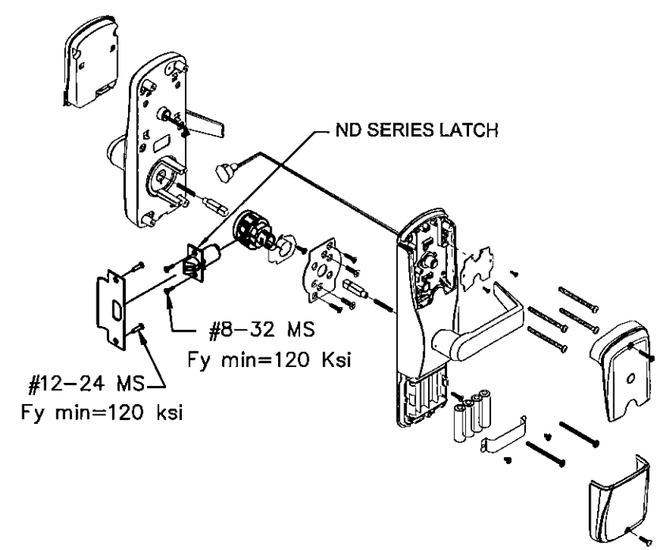

SCHLAGE CO/AD CY SERIES CYLINDRICAL LOCKSET
USED IN CONFIGURATIONS: 11 (SEE SHT.1)

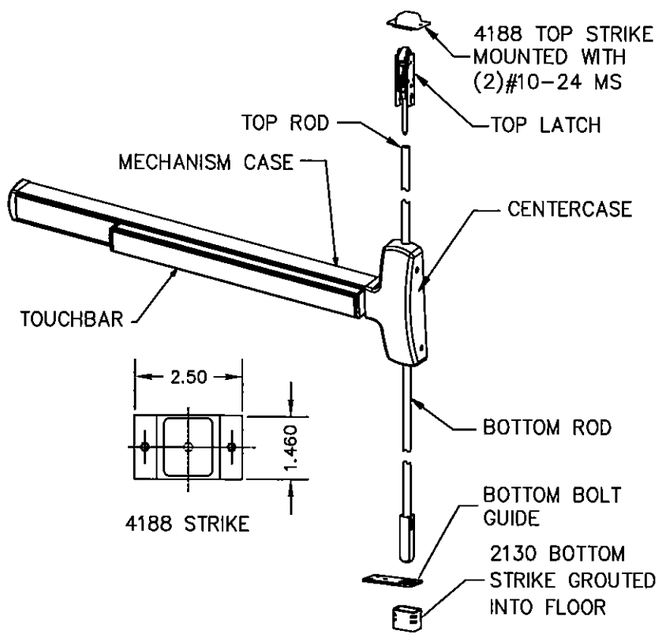

FALCON F-25-C **CONCEALED VERTICAL ROD EXIT DEVICE**
USED IN **DOOR CONFIGURATION 5** (SEE SHT.1)

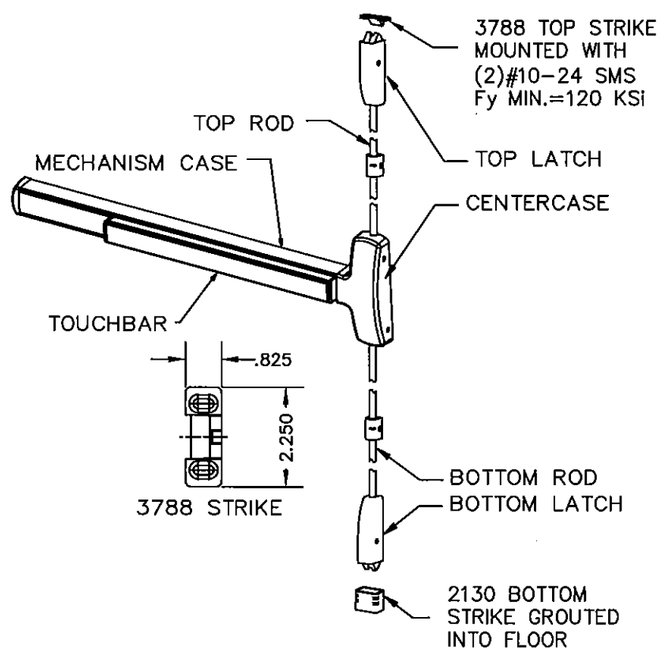

FALCON (F)25-V **SURFACE VERTICAL ROD EXIT DEVICE**
USED IN **DOOR CONFIGURATION 4** (SEE SHT.1)

GORDON D. THOMAS LICENSE No. 46718 STATE OF FLORIDA PROFESSIONAL ENGINEER
Gordon Thomas, P.E.
3759 Blossom Court
Mason, OH 45040
Florida # 46718
Date 9/31/15

REVISIONS			
LTR	DESCRIPTION	DATE	APPROVED
F	ADDED	12/18/09	
G	REVISED_PER_MDBCCO	04/08/10	
H	REVISED_NAME	11/01/13	
J	REVISED	05/05/15	

PRODUCT REVISED
as complying with the Florida Building Code
Acceptance No. 15-0530.04
Expiration Date 5/5/17
By /s/ Larry L. Lemon
Miami-Dade Product Control

EXIT HARDWARE OPTIONS:
F-25-C & (F)25-V SERIES - FUNCTIONS AE, DM, LM, LK, KOR, ED, EL, EA, FSA, FSE, HWEA
TRIMS: ALL APPLICABLE TRIMS AVAILABLE.

NOTE: ELECTRICAL FUNCTIONS/INSTALLATION AND FIRE RATINGS ARE NOT PART OF THIS APPROVAL AND TO BE REVIEWED AND APPROVED BY BUILDING OFFICIAL.

BEND RADIUS

THIRD ANGLE PROJECTION

SCHLAGE LOCK COMPANY, LLC
6810 HILLSDALE COURT
INDIANAPOLIS, IN 46250

MANUFACTURING FACILITY:
STEELCRAFT
9017 BLUE ASH ROAD
CINCINNATI, OH 45242

TITLE: STEELCRAFT H SERIES DOUBLE OUTSWING GLAZED COMMERCIAL STEEL DOORS WITH AND WITHOUT PANIC EXIT DEVICES

HARDWARE FOR GLASS DOUBLE DOORS.

DRAWN YMF	DATE 05/20/07		
CHECKED			
APPROVED		SIZE FLAT	DWG NO. IRGD07 REV K
ENG. APPVL JPD	11/15/07	SCALE: NTS AUTOCAD	SHEET 12 OF 17

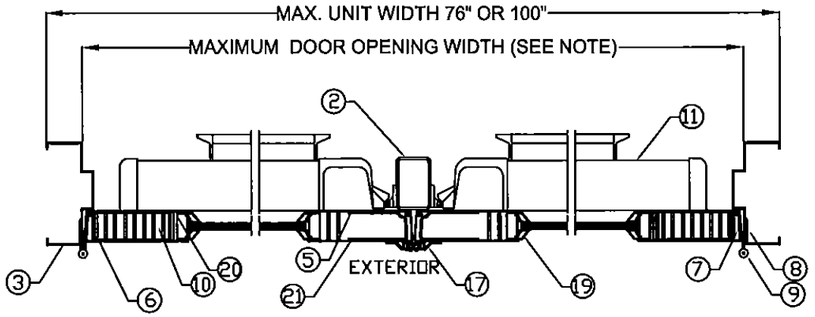

RIM EXIT DEVICE WITH VON DUPRIN MULLION
SECTION A-A
CONFIGURATIONS 1, 2, 3A, 3B
(SEE SHT.1)

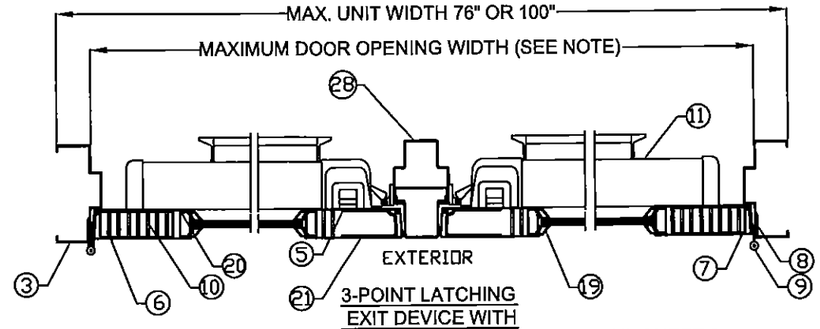

3-POINT LATCHING
EXIT DEVICE WITH
FIXED HOLLOW METAL MULLION-SEE MULLION DETAIL SHEET 6
SECTION A-A
CONFIGURATIONS 7 & 9
(SEE SHT.1)

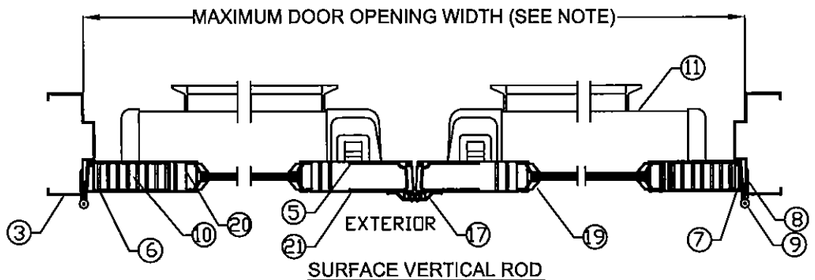

SURFACE VERTICAL ROD
EXIT DEVICE.
SECTION A-A
CONFIGURATION 4
(SEE SHT.1)

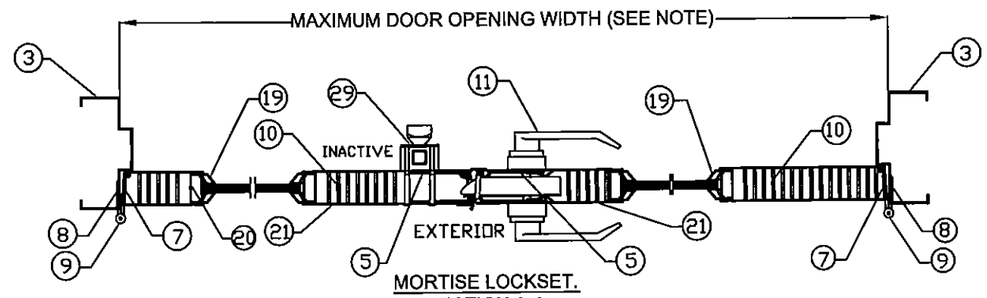

MORTISE LOCKSET.
SECTION A-A
CONFIGURATION 10
(SEE SHT.1)

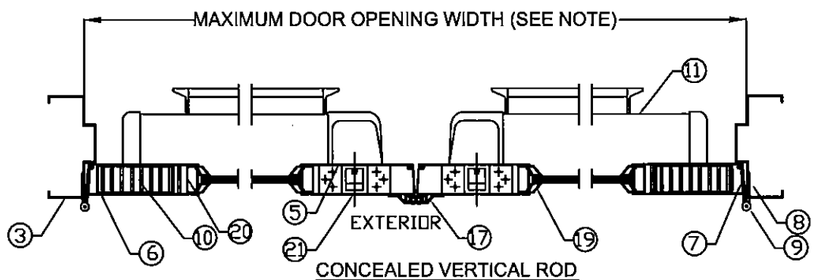

CONCEALED VERTICAL ROD
EXIT DEVICE.
SECTION A-A
CONFIGURATION 5
(SEE SHT.1)

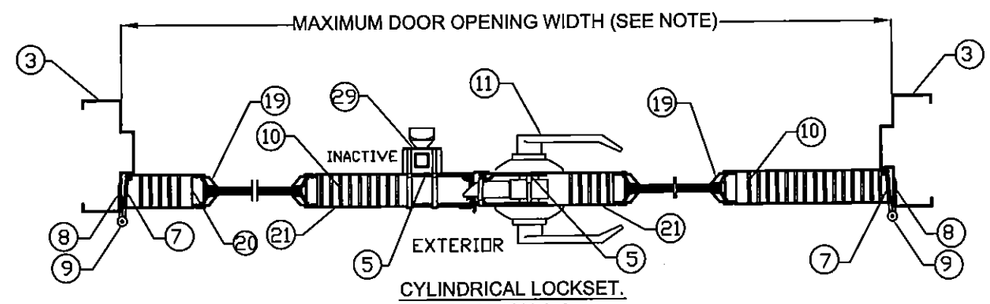

CYLINDRICAL LOCKSET.
SECTION A-A
CONFIGURATION 11
(SEE SHT.1)

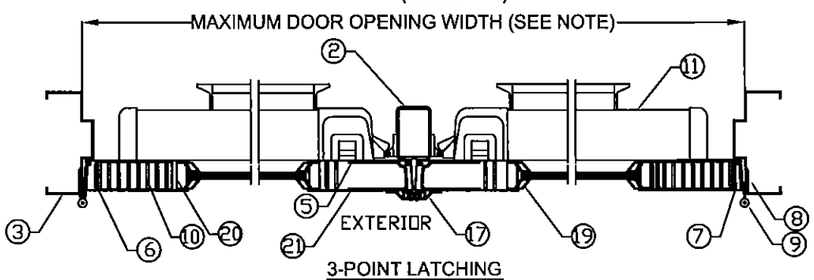

3-POINT LATCHING
EXIT DEVICE WITH
HARDWARE MULLION
SECTION A-A
CONFIGURATIONS 6 & 8
(SEE SHT.1)

REVISIONS				
LTR	DESCRIPTION		DATE	APPROVED
A	APPROVAL DWG	YMF	05/20/07	
B	REVISED DWG	RAP	11/26/07	
C	REVISED DWG	RAP	12/14/07	
D	REVISED DWG	YMF	12/14/08	
E	REVISED PER_MDBCCO	YMF	02/05/09	
F	REVISED NEW_NUMBER	YMF	01/04/10	
G	REVISED PER_MDBCCO	YMF	04/08/10	
H	REVISED NAME	JPD	11/01/13	
J	REVISED DWG	JPD	02/01/15	
K	REVISED DWG	JPD	05/05/15	

PRODUCT REVISED
as complying with the Florida
Building Code
Acceptance No. 15-0930.04
Expiration Date 5/25/17
By [signature]
Miami-Dade Product Control

NOTES:
1. FOR MAXIMUM DOOR OPENING AND GLASS (DLO) SIZE, SEE TABLE 1 ON SHEET 2 AND SHEET 7 FOR LIMITATIONS.
2. GLAZING DETAIL K SHOWN, SEE TABLE 8 ON SHEET 8 FOR ADDITIONAL OPTIONS AND SHEET 7 FOR LIMITATIONS
3. SEE SHEET 4 & 17 FOR ANCHOR INSTALLATION AND SILL INSTALLATION DETAILS

GORDON D. THOMAS
LICENSE
No. 46718
STATE OF FLORIDA
PROFESSIONAL ENGINEER
8/24/15
Gordon Thomas, P.E. Date
3759 Blossom Court
Mason, OH 45040
Florida # 46718

BEND RADIUS

THIRD ANGLE PROJECTION

DRAWN	YMF	DATE 05/20/07
CHECKED		
APPROVED		
ENG. APPVL	JPD	11/15/07

SCHLAGE LOCK COMPANY, LLC
6810 HILLSDALE COURT
INDIANAPOLIS, IN 46250

MANUFACTURING FACILITY:
STEELCRAFT
9017 BLUE ASH ROAD
CINCINNATI, OH 45242

TITLE: STEELCRAFT H SERIES DOUBLE OUTSWING GLAZED COMMERCIAL STEEL DOORS WITH AND WITHOUT PANIC EXIT DEVICES.

HORIZONTAL CROSS SECTIONS FOR GLASS DOUBLE DOORS.

SIZE	FLAT	DWG NO.	REV
		IRGD07	K
SCALE: NTS	AUTOCAD		SHEET 13 OF 17

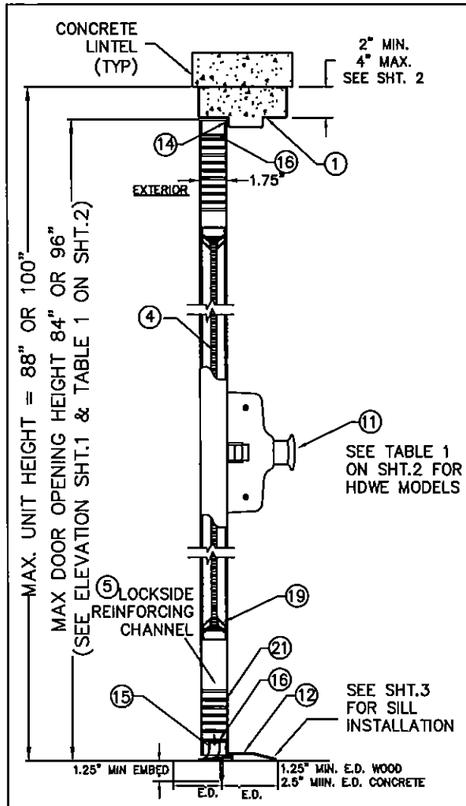

RIM EXIT DEVICE.
SECTION B-B
CONFIGURATIONS 1, 2, 3A, 3B (SEE SHT.1)

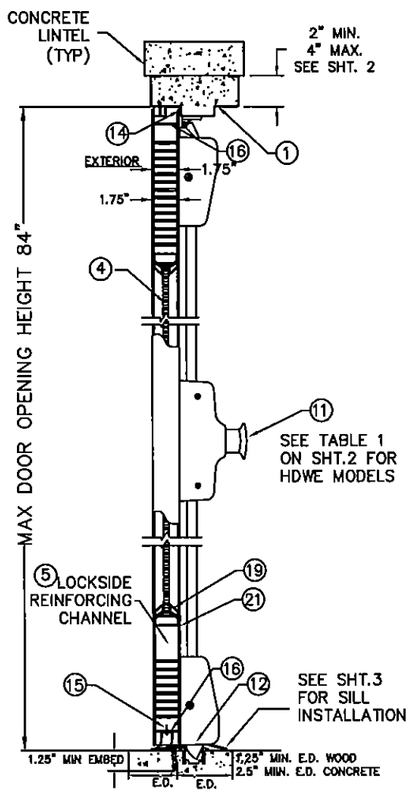

SURFACE VERTICAL ROD EXIT DEVICE.
SECTION B-B
CONFIGURATION 4 (SEE SHT.1)

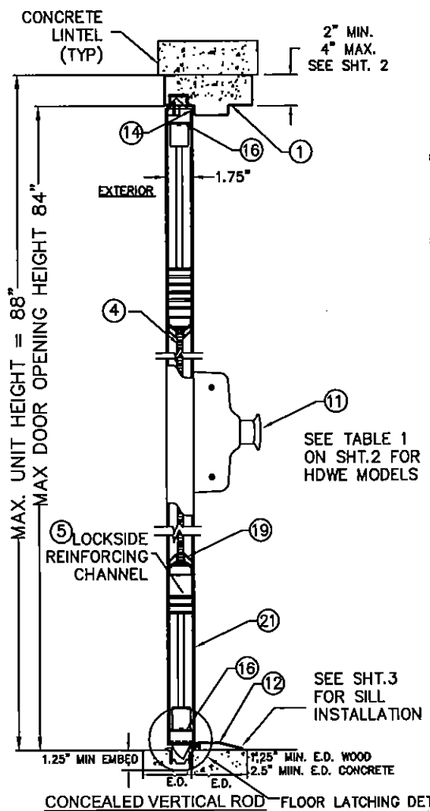

CONCEALED VERTICAL ROD EXIT DEVICE.
SECTION B-B
CONFIGURATION 5 (SEE SHT.1)

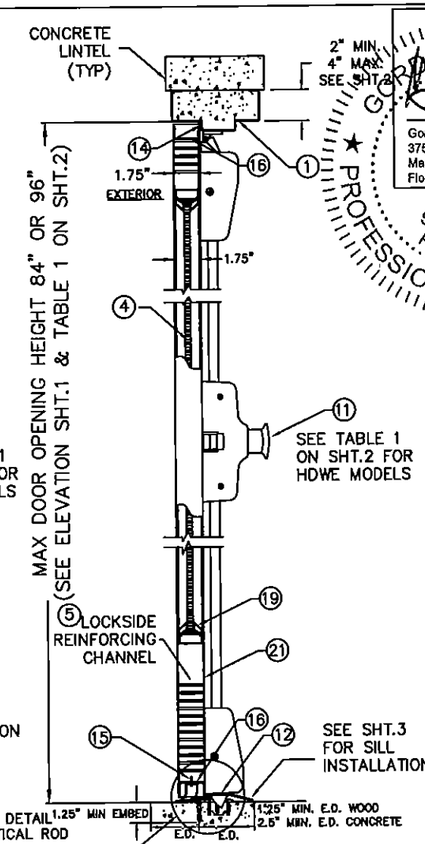

3-POINT LATCHING EXIT DEVICE WITH HARDWARE MULLION
SECTION B-B
CONFIGURATIONS 6 & 8 (SEE SHT.1)

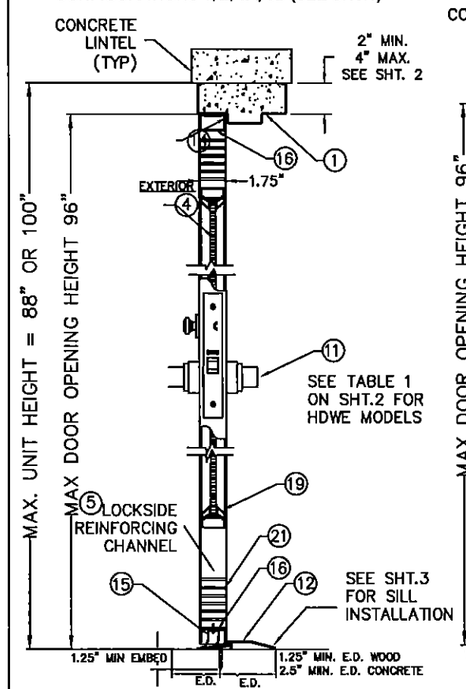

MORTISE LOCKSET.
SECTION B-B
CONFIGURATION 10 (SEE SHT.1)

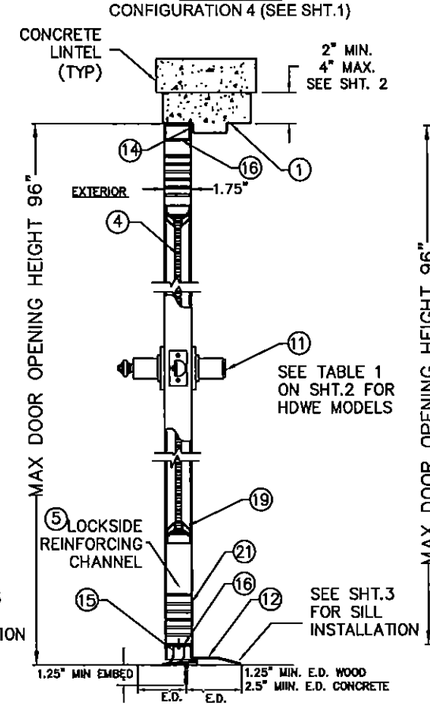

CYLINDRICAL LOCKSET.
SECTION B-B
CONFIGURATION 11 (SEE SHT.1)

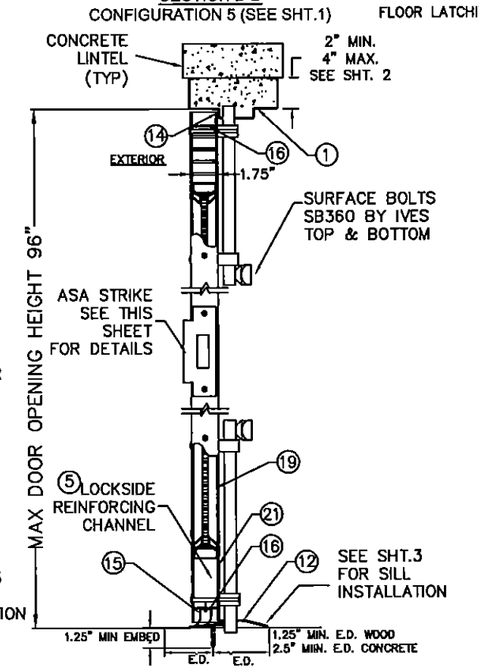

INACTIVE LEAF
SECTION C-C
CONFIGURATIONS 10 & 11 (SEE SHT.1)

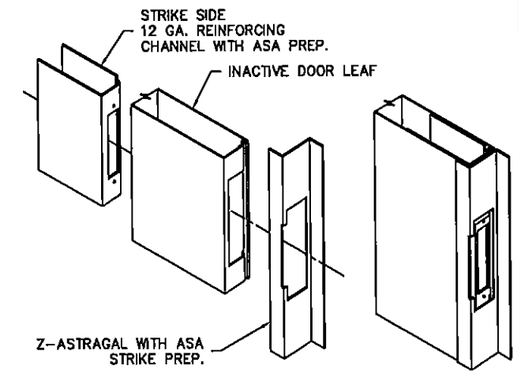

INACTIVE LEAF
ASA STRIKE PREP
AND ASSEMBLY DETAIL

MIN LATCH THROW: TOP=3/4"
BOTTOM=1/2"

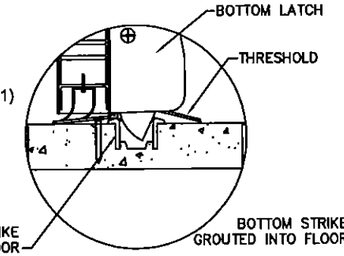

FLOOR LATCHING DETAIL
SURFACE VERTICAL ROD
EXIT DEVICE

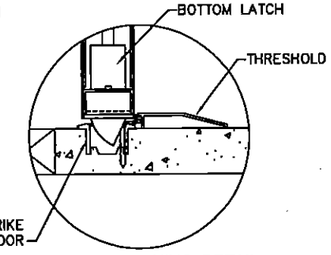

FLOOR LATCHING DETAIL
CONCEALED VERTICAL ROD
EXIT DEVICE

GORDON D. THOMAS
LICENSED
Gordon Thomas, P.E.
3759 Blossom Court
Mason, OH 45040
Florida # 49718
STATE OF FLORIDA
PROFESSIONAL ENGINEER

PRODUCT REVISED
as complying with the Florida Building Code
Acceptance No. 15-0930.04
Expiration Date 5/5/17
By Ishag I. Chaudhri
Mgr. Dade Product Control

NOTES:
1. FOR MAXIMUM DOOR OPENING AND GLASS (DLO) SIZE, SEE TABLE 1 ON SHEET 2 AND SHEETS 7 & 8 FOR LIMITATIONS.
2. SEE SHEET 4 & 17 FOR ANCHOR INSTALLATION AND SILL INSTALLATION DETAILS

REVISIONS

LTR	DESCRIPTION			DATE	APPROVED
A	APPROVAL	DWG	YMF	05/20/07	
B	REVISED	DWG	RAP	11/26/07	
C	REVISED	DWG	RAP	12/14/07	
D	REVISED	DWG	YMF	12/14/08	
E	REVISED	PER_MDBCCO	YMF	02/05/09	
F	REVISED	NEW_NUMBER	YMF	01/04/10	
G	REVISED	NEW_NUMBER	YMF	04/08/10	
H	REVISED	NAME	JPD	11/01/13	
J	REVISED	DWG	JPD	02/01/15	
K	REVISED	DWG	JPD	05/05/15	

BEND RADIUS

THIRD ANGLE PROJECTION

DRAWN	YMF	DATE 05/20/07
CHECKED		
APPROVED		
ENG. APPVL	JPD	11/15/07

SCHLAGE LOCK COMPANY, LLC
6810 HILLSDALE COURT
INDIANAPOLIS, IN 46250

MANUFACTURING FACILITY:
STEELCRAFT
9017 BLUE ASH ROAD
CINCINNATI, OH 45242

TITLE: STEELCRAFT H SERIES DOUBLE OUTSWING GLAZED COMMERCAL STEEL DOORS WITH AND WITHOUT PANIC EXIT DEVICES

VERTICAL CROSS SECTIONS FOR GLASS DOUBLE DOORS.

SIZE	FLAT	DWG NO.	REV
		IRGD07	K

SCALE: NTS | AUTOCAD | SHEET 14 OF 17

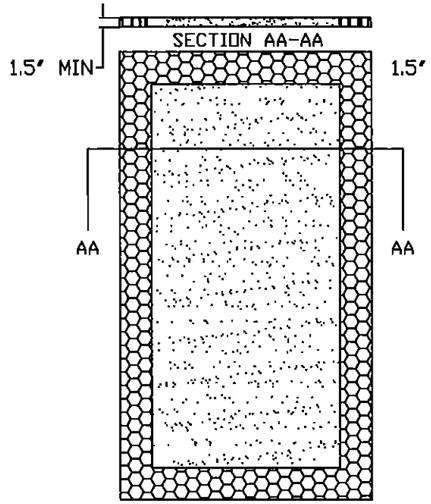

(A) EXPANDED POLYSTYRENE FOAM
BY ATLAS EPS
DENSITY: 1.0 LBS/FT^3

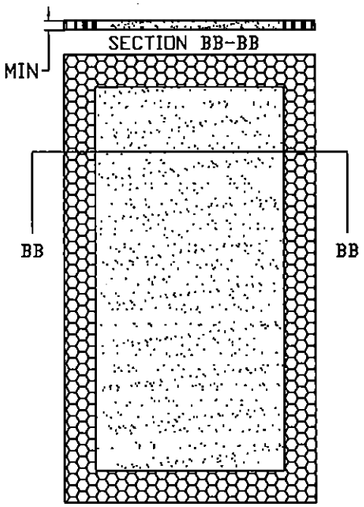

(B) POLYISOCYANURATE
(POLYURETHANE)
BY ELLIOT CO. OF INDIANAPOLIS, IN
DENSITY: 2 LBS/FT^3

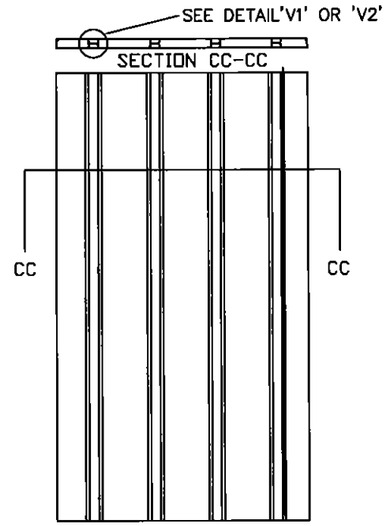

(C) STEEL STIFFENED
HAT SHAPED SECTIONS

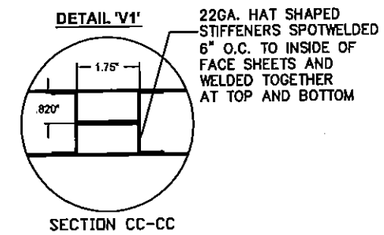

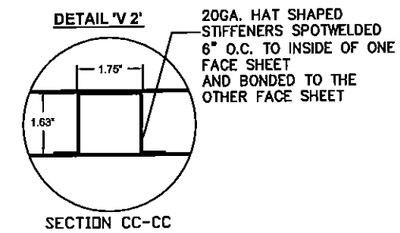

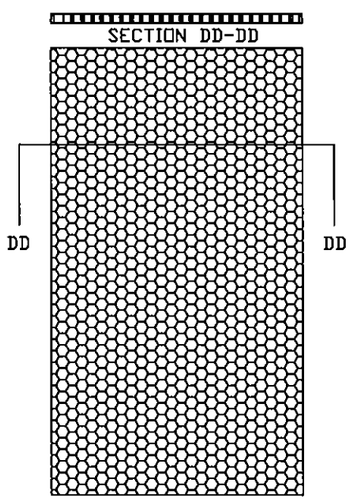

(D) HONEYCOMB
KRAFT PAPER.

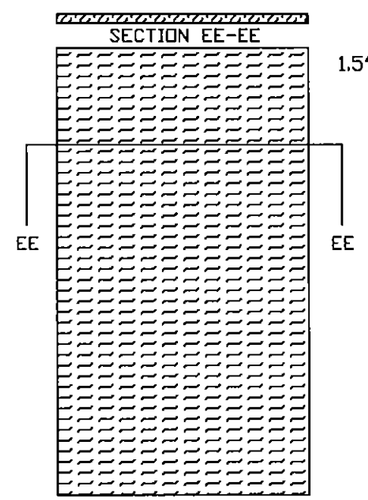

(E) TEMPERATURE RISE CORE
MINERAL FIBER BOARD
DENSITY: 17±1.5 LBS/FT^3
PYROPHIBIC SYSTEMS LTD
PYROPHOBIC PSL P25C-60 CORE
OR
MARSHFIELD DOOR SYSTEMS
CALCIUM SILICATE MINERAL CORE

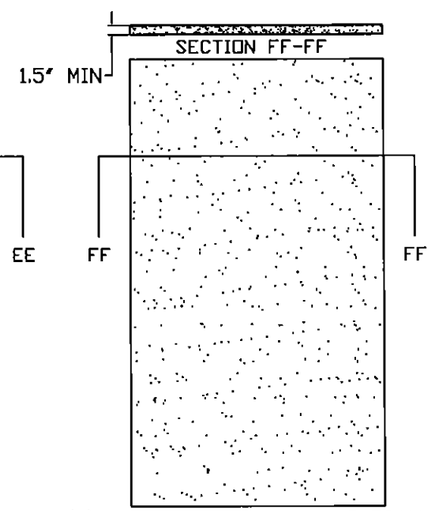

(F) EXPANDED POLYSTYRENE FOAM
BY ATLAS EPS DENSITY: 1.0 LB/FT^3
OR POLYISOCYANURATE
(POLYURETHANE)
BY ELLIOT CO. OF INDIANAPOLIS, IN
DENSITY: 2 LBS/FT^3

REVISIONS

LTR	DESCRIPTION		DATE	APPROVED
A	APPROVAL DWG	JPD	02/03/14	
B	REVISED DWG	JPD	02/01/15	
C	REVISED DWG	JPD	05/05/15	

PRODUCT REVISED
as complying with the Florida
Building Code
Acceptance No. 15-0530.04
Expiration Date 5/5/17
By [signature]
Miami Dade Product Control

NOTES:
1. CORE MATERIAL SHOWN WITHOUT CUTOUTS FOR REINFORCEMENTS

GORDON D. THOMAS
LICENSE
No. 46718
STATE OF FLORIDA
PROFESSIONAL ENGINEER
Gordon Thomas P.E.
3759 Blossom Court
Mason, OH 45040
Florida # 46718
Date

BEND RADIUS

THIRD ANGLE PROJECTION

DRAWN	JPD	DATE 02/03/14
CHECKED		
APPROVED		
ENG. APPVL		

SCHLAGE LOCK COMPANY, LLC
6810 HILLSDALE COURT
INDIANAPOLIS, IN 46250

MANUFACTURING FACILITY:
STEELCRAFT
9017 BLUE ASH ROAD
CINCINNATI, OH 45242

TITLE: STEELCRAFT H SERIES DOUBLE OUTSWING GLAZED COMMERCIAL STEEL DOORS WITH AND WITHOUT PANIC EXIT DEVICES

DOOR CORE OPTIONS

SIZE	FLAT	DWG NO.	REV
		IRGD07	C

SCALE: NTS | AUTOCAD | SHEET 15 of 17

STEEL BUTT HINGE
4.5" X 4.5" STD. WT. MIN.
IVES 5BB1/3CB1
STANLEY FBB179/1900
HAGER BB1279
.134" MIN. THICKNESS
Fy MIN. = 36ksi

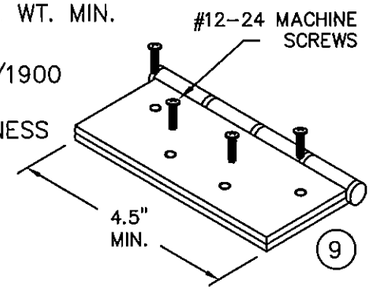

REVISIONS			
LTR	DESCRIPTION	DATE	APPROVED
A	APPROVAL DWGS.	11/01/13	
B	REVISED DWG.	02/01/15	
C	REVISED DWG.	05/05/15	

GORDON D. THOMAS
LICENSE
No. 46718
STATE OF FLORIDA
PROFESSIONAL ENGINEER
Gordon Thomas
3759 Blossom Court
Mason, OH 45040
Florida # 46718
Date 9/3/15

CONTINUOUS HINGE
IVES 112HD & 224HD
STANLEY 661HD
SELECT SL11HD
PEMKO FM_HD SERIES
HAGER 780-224HD
ABH A240HD
ALUMINUM 6036-T6 MIN
.110" MIN. THICKNESS

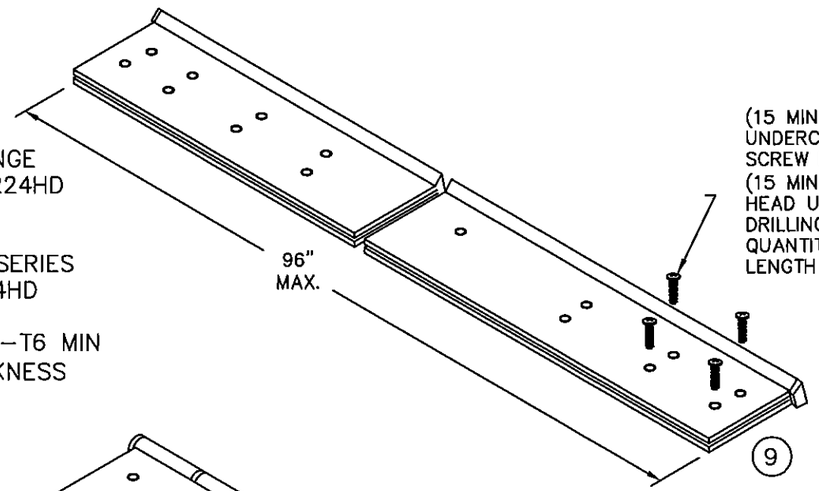

STEEL CONTINUOUS HINGE
IVES 600
.075 (14GA) MIN. THCKNESS
1012 COLD ROLLED STEEL
Fy MIN. 45ksi
STAINLESS STEEL CONTINUOUS HINGE
IVES 700, 700CS
HAGER 790-900
MARKAR FM-300 & HG305
ABH A500
.075" (14GA) MIN. THICKNESS
304 STAINLESS STEEL
Fy MIN. 31ksi

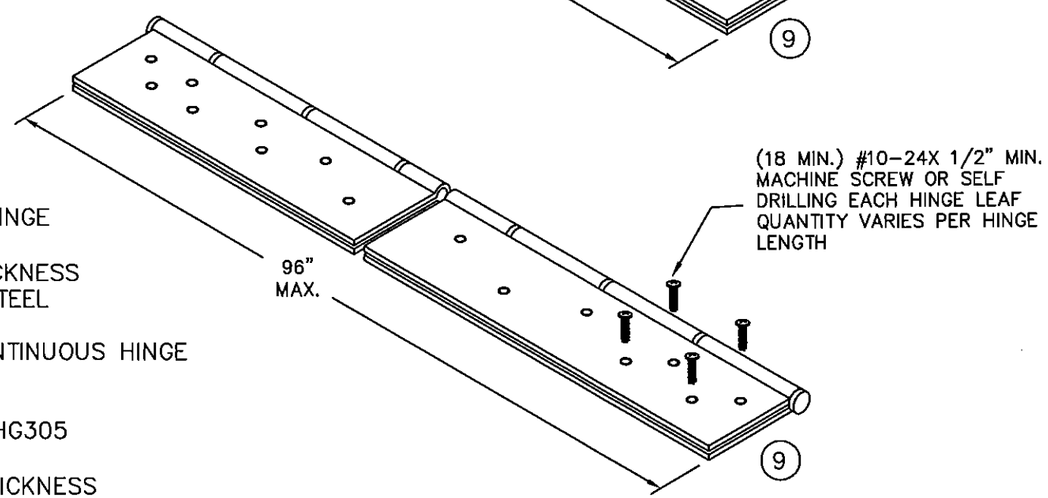

PRODUCT REVISED
as complying with the Florida
Building Code
Acceptance No. 15-0930.04
Expiration Date 5/5/17
By Miami-Dade Product Control

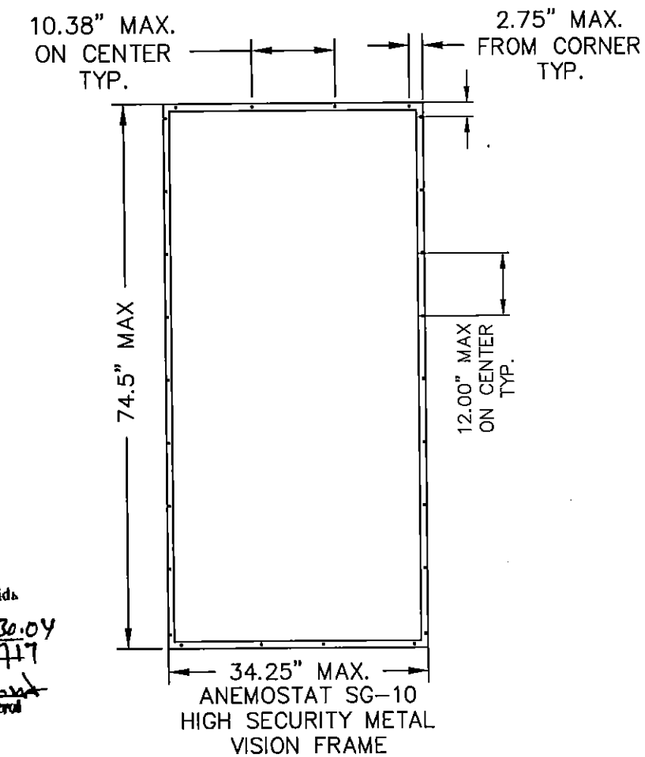

CONTINUOUS HINGE NOTES:
1. QUANTITY OF SCREWS VARIES PER HINGE LENGTH, MANUFACTURER AND MODEL NUMBER
2. SCREW SPACING VARIES PER HINGE LENGTH, MANUFACTURER AND MODEL NUMBER
3. INSTALL HINGES PER THE MANUFACTURERS INSTALLATION INSTRUCTIONS

BEND RADIUS

THIRD ANGLE PROJECTION

DRAWN JPD	DATE 02/03/14
CHECKED	
APPROVED	
ENG. APPVL	

SCHLAGE LOCK COMPANY, LLC
6810 HILLSDALE COURT
INDIANAPOLIS, IN 46250

MANUFACTURING FACILITY:
STEELCRAFT
9017 BLUE ASH ROAD
CINCINNATI, OH 45242

TITLE: STEELCRAFT H SERIES DOUBLE OUTSWING GLAZED COMMERCIAL STEEL DOORS WITH AND WITHOUT PANIC EXIT DEVICES

HINGE OPTIONS

SIZE	FLAT	DWG NO.	REV
		IRGD07	C
SCALE: NTS	AUTOCAD		SHT 16 OF 17

REVISIONS			
LTR	DESCRIPTION	DATE	APPROVED
A	APPROVAL DWG YMF	05/05/15	

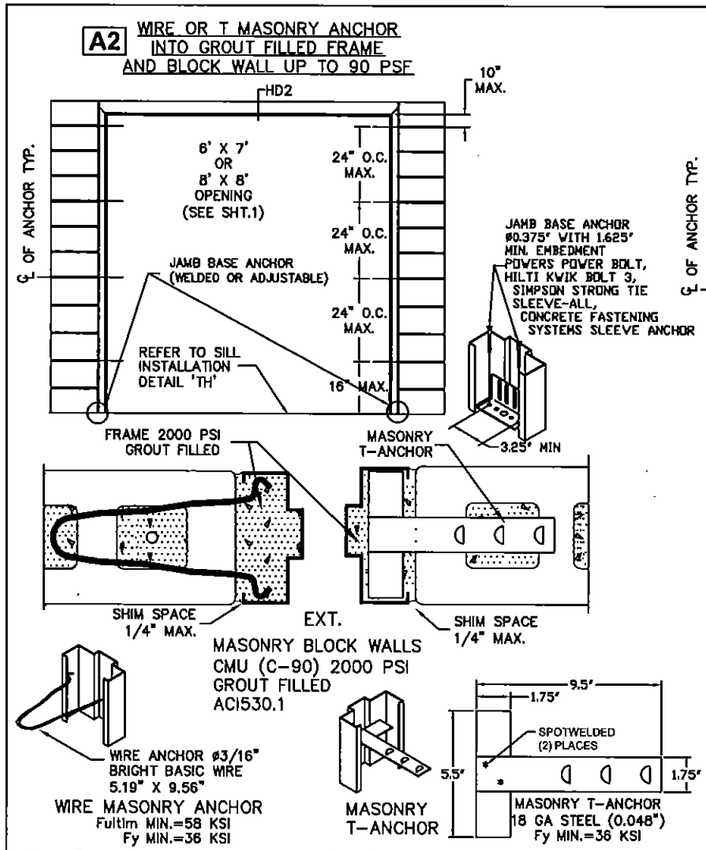

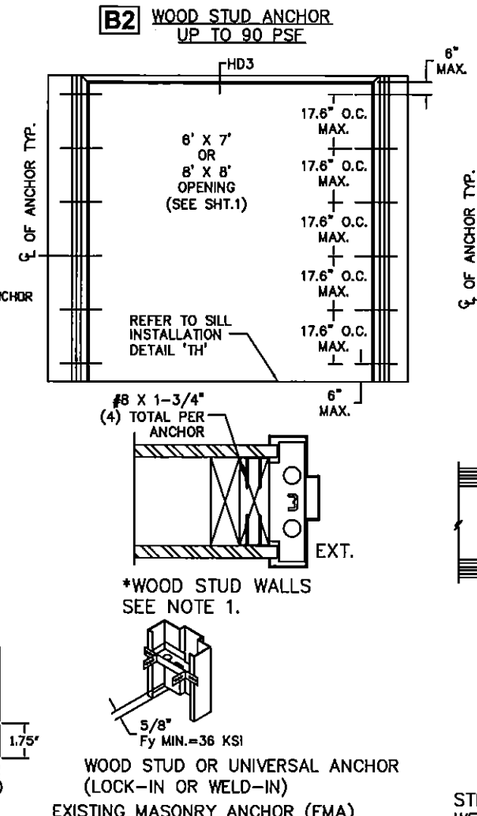

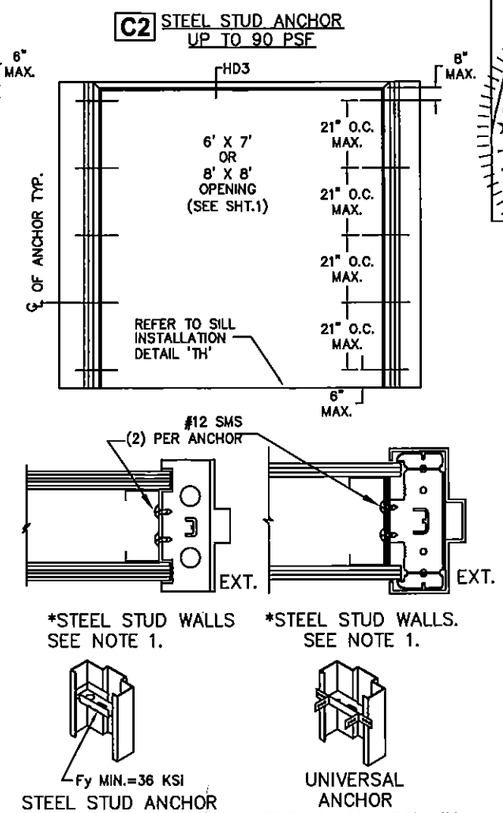

GORDON D. THOMAS LICENSE No. 46718 STATE OF FLORIDA PROFESSIONAL ENGINEER

Gordon Thomas, P.E. Date
3759 Blossom Court
Mason, OH 45040
Florida # 46718

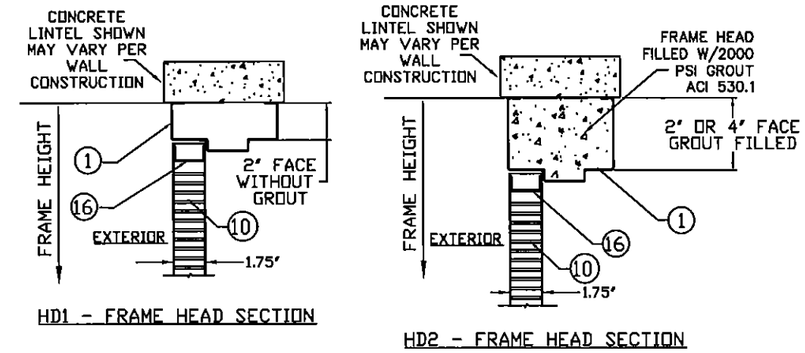

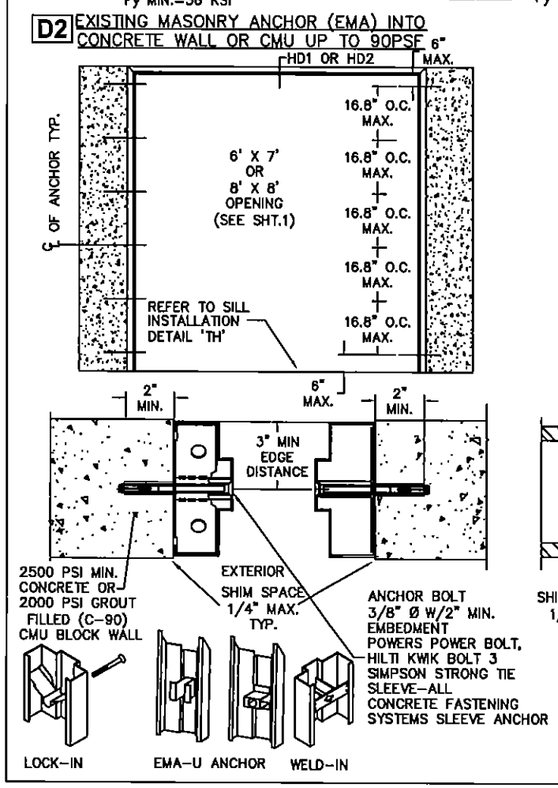

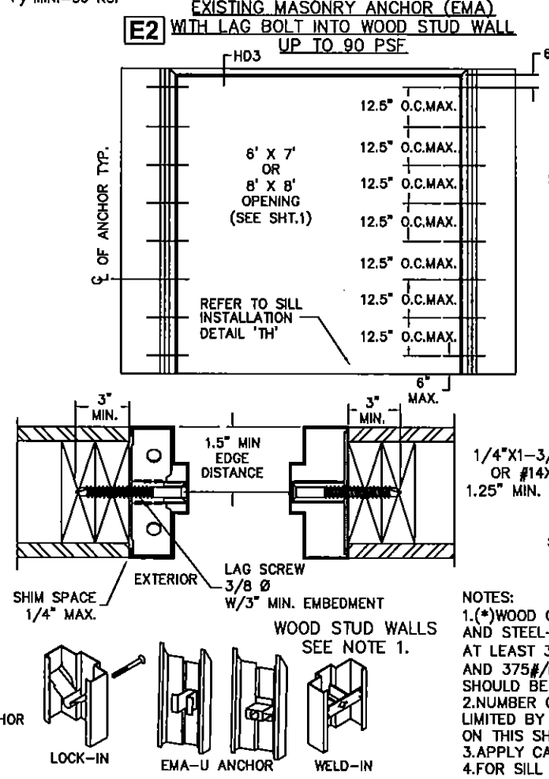

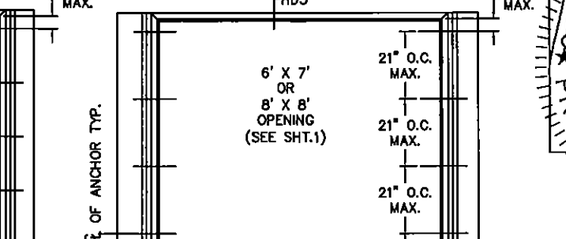

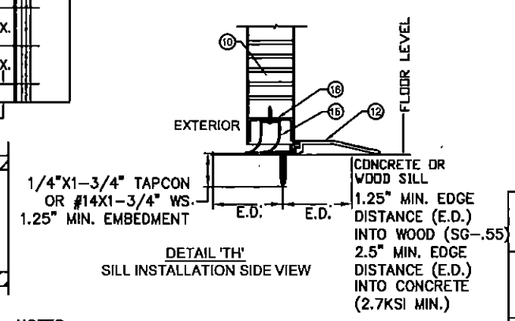

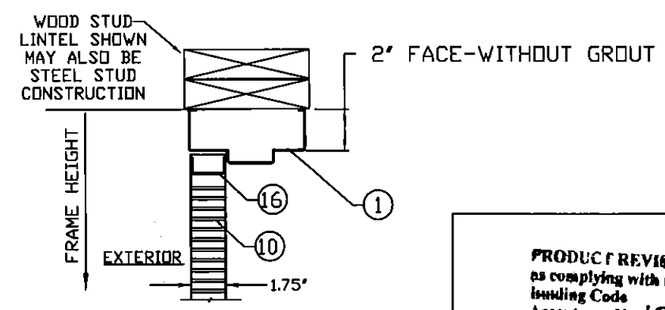

PRODUCT REVISED
as complying with the Florida building Code
Acceptance No. 15-0930.04
Expiration Date MAY 05, 2017
Miami-Dade Product Control

NOTES:
1.(*)WOOD OR (*)STEEL STRUCTURAL MEMBERS OF WOOD AND STEEL-STUD WALLS MUST BE DESIGNED TO CARRY AT LEAST 312 #/FT. LOAD FOR ASSEMBLIES RATED @75 PSF, AND 375#/FT. FOR ASSEMBLIES RATED @ 90 PSF, WHICH SHOULD BE VERIFIED BY THE APPROPRIATE OFFICIAL.
2.NUMBER OF ANCHORS FOR VARIOUS OPENING HEIGHTS IS LIMITED BY MAXIMUM DISTANCE BETWEEN ANCHORS, SHOWN ON THIS SHEET.
3.APPLY CAULK AS NEEDED.
4.FOR SILL INSTALLATION & ANCHORING SEE SHT 3, 4, 5 & 17

BEND RADIUS

THIRD ANGLE PROJECTION

DRAWN	YMF	DATE 05/20/07
CHECKED		
APPROVED		
ENG. APPVL	JPD	10/12/07

SCHLAGE LOCK COMPANY, LLC
6810 HILLSDALE COURT
INDIANAPOLIS, IN 46250

MANUFACTURING FACILITY:
STEELCRAFT
9017 BLUE ASH ROAD
CINCINNATI, OH 45242

TITLE: STEELCRAFT H SERIES DOUBLE OUTSWING GLAZED COMMERCIAL STEEL DOORS WITH AND WITHOUT PANIC EXIT DEVICES

ANCHOR DETAILS / INSTALLATION CONDITIONS FOR ASSEMBLIES WITH A DESIGN PRESSURE RATING GREATER THAN 75 PSF UP TO AND INCLUDING 90 PSF

SIZE	FLAT	DWG NO.	REV
		IRGD07	A
SCALE: NTS	AUTOCAD		SHEET 17 OF 17