MIAMI-DADE COUNTY
DEPARTMENT OF REGULATORY AND ECONOMIC RESOURCES (RER)
BOARD AND CODE ADMINISTRATION DIVISION

MIAMI–DADE COUNTY, FLORIDA
PRODUCT CONTROL SECTION
11805 SW 26 Street, Room 208
T (786) 315–2590 F (786) 315–2599
www.miamidade.gov/economy

NOTICE OF ACCEPTANCE (NOA)

RC Home Showcase, Inc.
2970 NW 75th Avenue
Miami, FL 33122

SCOPE:

This NOA is being issued under the applicable rules and regulations governing the use of construction materials. The documentation submitted has been reviewed and accepted by Miami–Dade County RER–Product Control Section to be used in Miami–Dade County and other areas where allowed by the Authority Having Jurisdiction (AHJ).

This NOA shall not be valid after the expiration date stated below. The Miami–Dade County Product Control Section (In Miami–Dade County) and/ or the AHJ (in areas other than Miami–Dade County) reserve the right to have this product or material tested for quality assurance purposes. If this product or material fails to perform in the accepted manner, the manufacturer will incur the expense of such testing and the AHJ may immediately revoke, modify, or suspend the use of such product or material within their jurisdiction. RER reserves the right to revoke this acceptance, if it is determined by Miami–Dade County Product Control Section that this product or material fails to meet the requirements of the applicable building code.

This product is approved as described herein, and has been designed to comply with the Florida Building Code, including the High Velocity Hurricane Zone.

DESCRIPTION:

Series "RD45" Aluminum Outswing Entrance Door w/ wo Transom and Sidelites – L.M.I.

APPROVAL DOCUMENT: Drawing No. **W04–37**, titled "Series RD45 Alum. Entrance Door (L.M.I.)", sheets 1 through 10 of 10, dated 05/09/04 with revision "**J**" dated 04/18/16, prepared by Al–Farooq Corporation, signed and sealed by Javad Ahmad, P. E., bearing the Miami–Dade County Product Control Section Revision stamp with the Notice of Acceptance number and Expiration date by the Miami–Dade County Product Control Section.

MISSILE IMPACT RATING: Large and Small Missile Impact Resistant

LABELING: Each unit shall bear a permanent label with the manufacturer's name or logo, city, state, series, and following statement: "Miami–Dade County Product Control Approved", unless otherwise noted herein.

RENEWAL of this NOA shall be considered after a renewal application has been filed and there has been no change in the applicable building code negatively affecting the performance of this product.

TERMINATION of this NOA will occur after the expiration date or if there has been a revision or change in the materials, use, and/ or manufacture of the product or process. Misuse of this NOA as an endorsement of any product, for sales, advertising or any other purposes shall automatically terminate this NOA. Failure to comply with any section of this NOA shall be cause for termination and removal of NOA.

ADVERTISEMENT: The NOA number preceded by the words Miami–Dade County, Florida, and followed by the expiration date may be displayed in advertising literature. If any portion of the NOA is displayed, then it shall be done in its entirety.

INSPECTION: A copy of this entire NOA shall be provided to the user by the manufacturer or its distributors and shall be available for inspection at the job site at the request of the Building Official.

This NOA **revises NOA No. 13–1112.06** and consists of this page 1 and evidence pages E–1 and E–2, as well as approval document mentioned above.

The submitted documentation was reviewed by **Jorge M. Plasencia, P. E.**

MIAMI-DADE COUNTY APPROVED

4/20/16

RC Home Showcase, Inc.

NOTICE OF ACCEPTANCE: EVIDENCE SUBMITTED

A. DRAWINGS

1. Manufacturer's die drawings and sections.
   (Submitted under NOA's No.'s 04–0608.03 and 08–0613.07)
2. Drawing No. **W04–37**, titled "Series RD45 Alum. Entrance Door (L.M.I.)", sheets 1 through 10 of 10, dated 05/09/04 with revision "**J**" dated 04/18/16, prepared by Al–Farooq Corporation, signed and sealed by Javad Ahmad, P. E.

B. TESTS

1. Test reports on:
   1) Air Infiltration Test, per FBC, TAS 202–94
   2) Uniform Static Air Pressure Test, Loading per FBC, TAS 202–94
   3) Water Resistance Test, per FBC, TAS 202–94
   4) Large Missile Impact Test per FBC, TAS 201–94
   5) Cyclic Wind Pressure Loading per FBC, TAS 203–94
   6) Forced Entry Test, per FBC 2411.3.2.1, and TAS 202–94

   along with marked–up drawings and installation diagram of aluminum outswing door, prepared by Fenestration Testing Laboratory, Inc., Test Reports No.'s:
   1. **FTL–5390**, dated 02/18/08, signed and sealed by Carlos S. Rionda, P. E. ***(Submitted under NOA No. 08–0613.07);***
   2. **FTL–4154**, dated 03/24/04, **FTL–4155**, dated 03/30/04 and **FTL–4166**, dated 03/31/04, all signed and sealed by Edmundo Largaespada, P. E.

   (Submitted under NOA No. 04–0608.03)

C. CALCULATIONS

1. Anchor verification calculations and structural analysis, complying with **FBC 5th Edition (2014)**, prepared by Al–Farooq Corporation, dated 09/25/15 revised on 04/18/16, signed and sealed by Javad Ahmad, P. E.
2. **Glazing complies with ASTM E1300–04/ 09**

D. QUALITY ASSURANCE

1. Miami–Dade Department of Regulatory and Economic Resources (RER).

E. MATERIAL CERTIFICATIONS

1. Notice of Acceptance No. **14-0916.10** issued to **Kuraray America, Inc.** for their **"Butacite® PVB Glass Interlayer"** dated 04/25/15, expiring on 12/11/16.

Jorge M. Plasencia, P. E.
Product Control Unit Supervisor
NOA No. 15–1007.02
Expiration Date: August 19, 2019
Approval Date: April 28, 2016

F. STATEMENTS

1. Statement letter of conformance, complying with **FBC 5th Edition (2014)** and no financial interests, issued by Al–Farooq Corporation, dated 09/21/15, signed and sealed by Javad Ahmad, P. E.
2. Name changed to **RC HOME SHOWCASE, INC.** as registered in the Florida Department of State, Division of Corporation, documents dated 10/11/13.
   (Submitted under NOA No. 13–1112.06)
3. Asset purchase agreement dated 10/01/13, signed by Mr. Manuel A. Kronfle–Kozhaya, Mr. Henry F. Kronfle–Kozhaya, Mr. Raul Casares, Mr. Eusebio Paredes and Ms. Nancy Vias.
   (Submitted under NOA No. 13–1112.06)
4. Statement letter of complying with the Sales of Assets issued by RC Aluminum Industries, Inc., dated 10/30/2013, signed by Raul Casares, President.
   (Submitted under previous NOA No. 13–1112.06)
5. Laboratory compliance letters prepared by Fenestration Testing Laboratory, Inc., for following Test Reports No.'s:
   - **I. FTL–5390**, dated 02/18/08, signed and sealed by Carlos S. Rionda, P. E. ***(Submitted under NOA No. 08–0613.07);***
   - **II. FTL–4154**, dated 03/24/04, **FTL–4155**, dated 03/30/04 and **FTL–4166**, dated 03/31/04, all signed and sealed by Edmundo Largaespada, P. E.
     (Submitted under NOA No. 04–0608.03)
6. Proposals issued by Product Control:
   - **I.** No. **07–2426**, dated 05/08/07, signed by Ishaq Chanda, P. E.
     (Submitted under NOA No. 08–0613.07)
   - **II.** Dated 07/18/06, signed by Jaime D. Gascon, P. E.
     (Submitted under NOA No. 08–0613.07)
   - **III.** Dated 12/03/03, signed by Jaime D. Gascon, P. E.
     (Submitted under NOA No. 04–0608.03)

G. OTHERS

1. Notice of Acceptance No. **13–1112.06**, issued to R.C. Aluminum Industries, Inc. for their Series "**RD45 Outswing Aluminum Entrance Door w/ wo transom and sidelites – L.M.I.**", approved on 12/26/13 and expiring on 08/19/19.

Jorge M. Plasencia, P. E.
Product Control Unit Supervisor
NOA No. 15–1007.02
Expiration Date: August 19, 2019
Approval Date: April 28, 2016

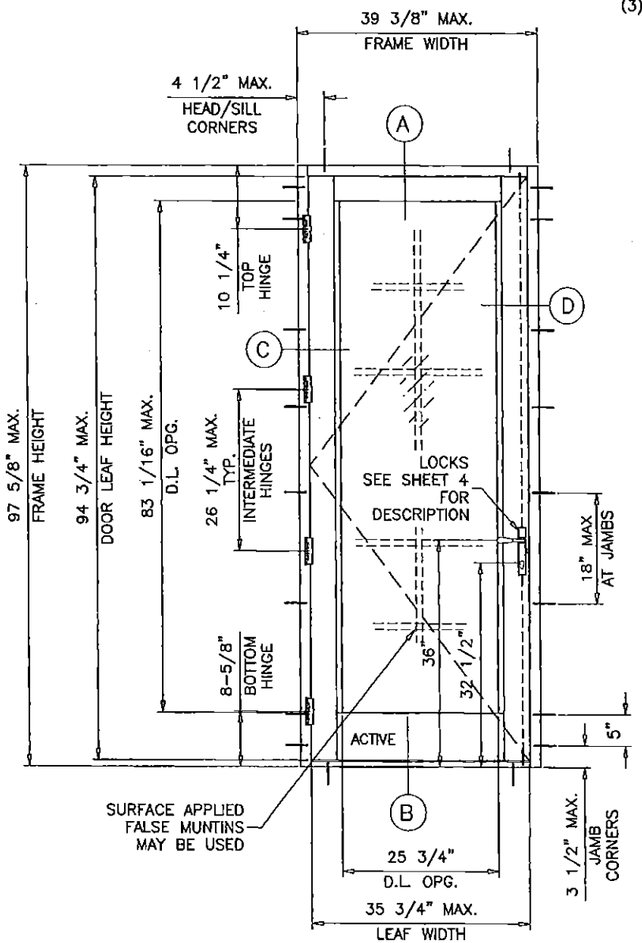

(X)

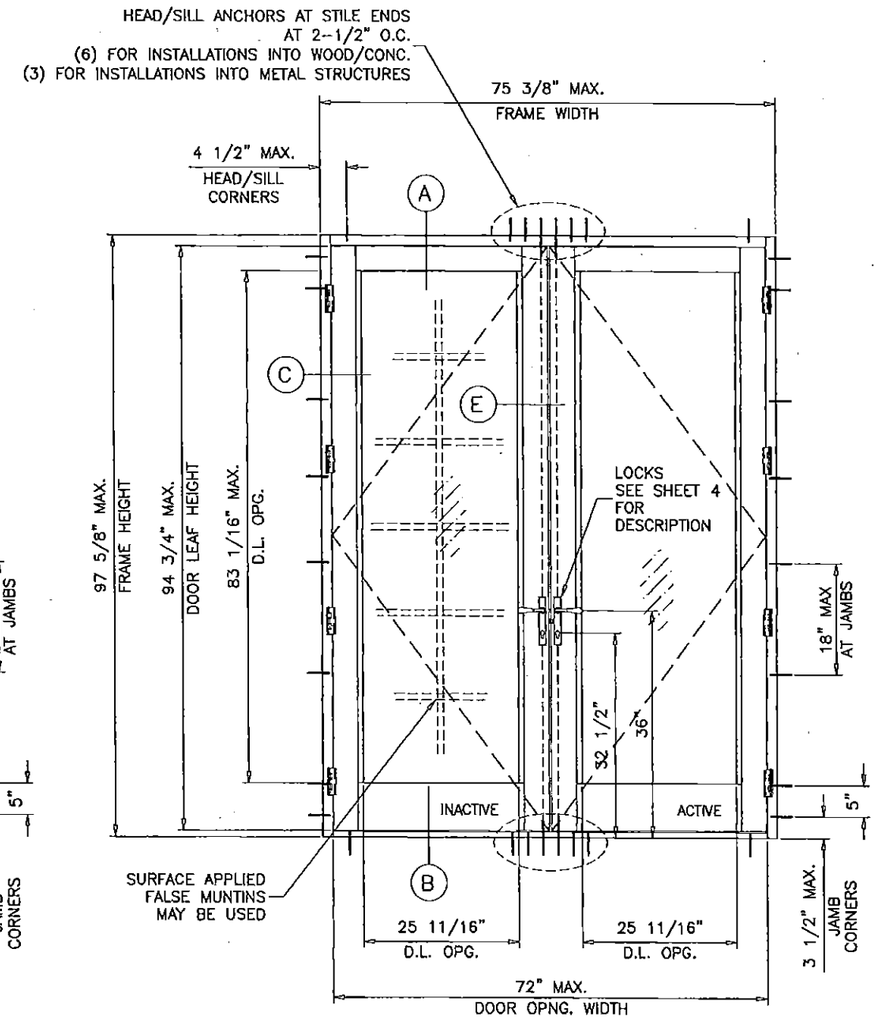

(XX)

GLASS D.L.O. DIMS.

D.L.O. HEIGHT = FRAME HEIGHT – 14.5625"
D.L.O. WIDTH (X DOORS) = FRAME WIDTH – 13.625"
D.L.O. WIDTH (XX DOORS) = (FRAME WIDTH – 24.0")/2

SERIES RD45
ALUMINUM OUTSWING ENTRANCE DOOR

SINGLE (X) AND DOUBLE (XX) LEAF DOORS W/O TRANSOM SEE ABOVE.
SINGLE (O/X) AND DOUBLE (O/XX) LEAF DOORS WITH TRANSOMS SEE SHEET 2.
SINGLE AND DOUBLE LEAF DOORS WITH SIDELITES SEE SHEET 3.
LOWER VALUES FROM SIDELITE CAPACITY CHART OR DOOR CAPACITY WILL APPLY TO ENTIRE SYSTEM.

THIS PRODUCT HAS BEEN DESIGNED AND TESTED TO COMPLY WITH THE REQUIREMENTS OF THE 2014 (5TH EDITION) FLORIDA BUILDING CODE INCLUDING HIGH VELOCITY HURRICANE ZONE (HVHZ).

WOOD BUCKS BY OTHERS, MUST BE ANCHORED PROPERLY TO TRANSFER LOADS TO THE STRUCTURE.

ANCHORS SHALL BE AS LISTED, SPACED AS SHOWN ON DETAILS, ANCHORS EMBEDMENT TO BASE MATERIAL SHALL BE BEYOND WALL DRESSING OR STUCCO.

ANCHORING OR LOADING CONDITIONS NOT SHOWN IN THESE DETAILS ARE NOT PART OF THIS APPROVAL.

A LOAD DURATION INCREASE IS USED IN DESIGN OF ANCHORS INTO WOOD ONLY.

ALL SHIMS TO BE HIGH IMPACT, NON-METALLIC AND NON-COMPRESSIBLE.

MATERIALS INCLUDING BUT NOT LIMITED TO STEEL/METAL SCREWS, THAT COME INTO CONTACT WITH OTHER DISSIMILAR MATERIALS SHALL MEET THE REQUIREMENTS OF THE 2014 FLORIDA BUILDING CODE.

MAXIMUM DESIGN LOAD RATING (FOR SIZES SHOWN ABOVE OR SMALLER)	= + 80.0 PSF – 80.0 PSF

EGRESS REQUIREMENTS TO BE REVIEWED BY BLDG. OFFICIAL.

THESE DOORS ARE RATED FOR LARGE & SMALL MISSILE IMPACT. SHUTTERS ARE NOT REQUIRED.

NOTE:
GLASS CAPACITIES ON THIS SHEET ARE BASED ON ASTM E1300-09 (3 SEC. GUSTS) AND FLORIDA BUILDING COMMISSION DECLARATORY STATEMENT DCA05-DEC-219

PRODUCT REVISED
as complying with the Florida Building Code
NOA-No. 15-1007.02
Expiration Date 08/19/2019
By
Miami-Dade Product Control

JAVAD AHMAD
LICENSE
No. 70582
4-20-16
STATE OF FLORIDA
PROFESSIONAL ENGINEER

AL-FAROOQ CORPORATION
ENGINEERS & PRODUCT DEVELOPMENT
9360 SUNSET DRIVE, SUITE 220
MIAMI, FLORIDA 33173 (C.A.N. 3538)
TEL. (305) 264-8100 FAX. (305) 262-6978
COMP-ANL\W04-37RC

SERIES RD45 ALUM ENTRANCE DOOR (L.M.I.)

RC Home Showcase, Inc.
16115 NW 52nd Ave.
Miami, FL. 33014
TEL. (305) 392-6214 FAX. (305) 260-6432

revisions:

no	date	by	description
G	12.17.13		REV. PER RER COMMENTS
H	09.22.15		UPDATED TO 2014 FBC
I	03.17.16		REV. PER RER COMMENTS
J	04.18.16		REV. PER RER COMMENTS

date: 05-09-04
scale: 1/2"=1'-0"
dr. by: HAMID
chk. by:

drawing no.
W04-37

sheet 1 of 10

DESIGN LOAD CAPACITY – PSF SINGLE OR DOUBLE ENTRANCE DOORS WITH TRANSOMS				
WIDTH-W1 INCHES	WIDTH-W2 INCHES	DOOR HEIGHT-A INCHES	GLASS TYPE 'A'	GLASS TYPE 'B'
			EXT.(+)/INT.(–)	EXT.(+)/INT.(–)
63–3/8	24	81–5/8	80.0	80.0
	30		80.0	80.0
	37–5/8		80.0	80.0
	43–5/8		69.0	69.0
69–3/8	24		80.0	80.0
	30		80.0	80.0
	37–5/8		80.0	80.0
75–3/8	24		80.0	80.0
	30		80.0	80.0
	37–5/8		80.0	80.0
63–3/8	24	85–5/8	80.0	80.0
	30		80.0	80.0
	37–5/8		80.0	80.0
	43–5/8		69.0	69.0
69–3/8	24		80.0	80.0
	30		80.0	80.0
	37–5/8		80.0	80.0
75–3/8	24		80.0	80.0
	30		80.0	80.0
	37–5/8		80.0	80.0
63–3/8	24	91–5/8	80.0	80.0
	30		80.0	80.0
	37–5/8		80.0	80.0
	43–5/8		69.0	69.0
69–3/8	24		80.0	80.0
	30		80.0	80.0
	37–5/8		80.0	80.0
75–3/8	24		80.0	80.0
	30		80.0	80.0
	37–5/8		80.0	80.0
63–3/8	24	97–5/8	80.0	80.0
	30		80.0	80.0
	37–5/8		80.0	80.0
	43–5/8		69.0	69.0
69–3/8	24		80.0	80.0
	30		80.0	80.0
	37–5/8		80.0	80.0
75–3/8	24		80.0	80.0
	30		80.0	80.0
	37–5/8		80.0	80.0

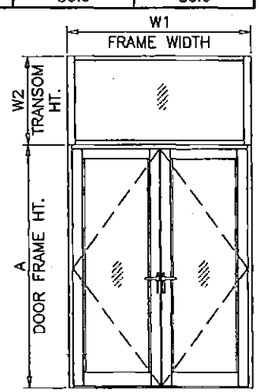

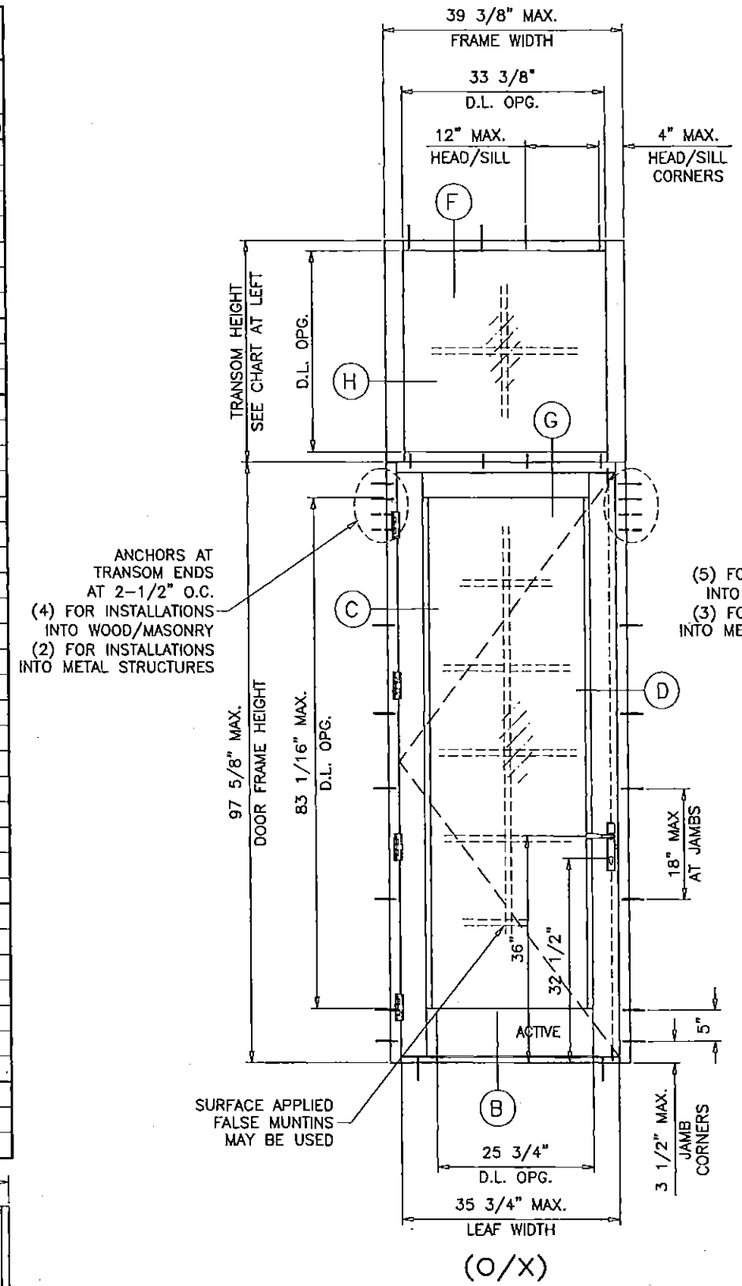

(O/X)

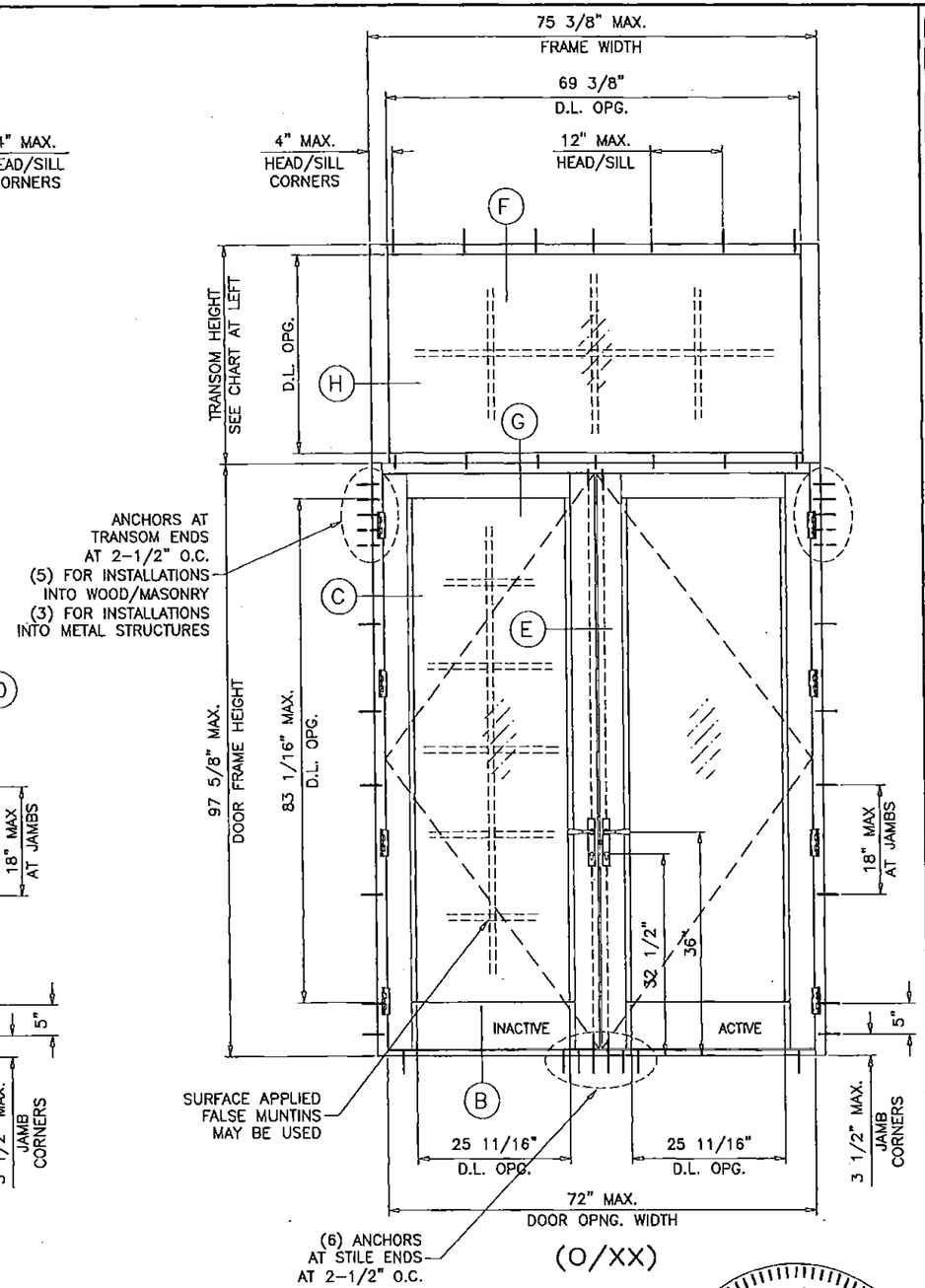

(O/XX)

GLASS D.L.O. DIMS. (TRANSOM)

D.L.O. HEIGHT = TRANSOM HEIGHT – 3.375"

D.L.O. WIDTH = TRANSOM WIDTH – 6.0"

$$W1\ (\text{SINGLE DOOR FRAME WIDTH}) = \frac{W1}{2} + 1\text{–}5/8"$$

PRODUCT REVISED
as complying with the Florida Building Code
NOA-No. 15-1007.02
Expiration Date 08/19/2019
By
Miami-Dade Product Control

JAVAD AHMAD
LICENSE
No. 70592
4-20-16
STATE OF FLORIDA
PROFESSIONAL ENGINEER

AL-FAROOQ CORPORATION
ENGINEERS & PRODUCT DEVELOPMENT
9360 SUNSET DRIVE, SUITE 220
MIAMI, FLORIDA 33173 (C.A.N. 3538)
TEL. (305) 264-8100 FAX. (305) 262-6978

COMP–ANL\W04–37RC

SERIES RD45 ALUM ENTRANCE DOOR (L.M.I.)

RC Home Showcase, Inc.
16115 NW 52nd Ave.
Miami, FL. 33014
TEL (305) 392–6214 FAX. (305) 260–6432

revisions:

no	date	by	description
G	12.17.13		REV. PER RER COMMENTS
H	09.22.15		UPDATED TO 2014 FBC
I	03.17.16		REV. PER RER COMMENTS
J	04.18.16		REV. PER RER COMMENTS

date: 05–09–04
scale: 1/2"=1'–0"
dr. by: HAMID
chk. by:

drawing no.
W04–37

sheet 2 of 10

DESIGN LOAD CAPACITY – PSF SIDELITES		
SIDELITE WIDTH INCHES	FRAME HEIGHT INCHES	GLASS TYPE 'A' & 'B' EXT.(+)/INT.(–)
36–1/4	81–5/8	80.0
38–5/8		75.1
41–1/4		70.3
43–1/4		67.1
36–1/4	85–5/8	80.0
38–5/8		75.1
41–1/4		70.3
36–1/4	91–5/8	80.0
36–1/4	97–5/8	80.0

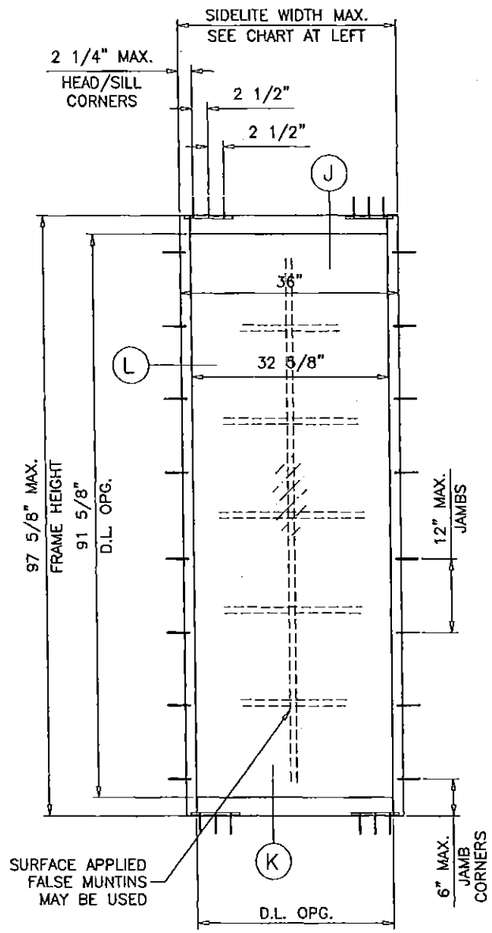

(O)

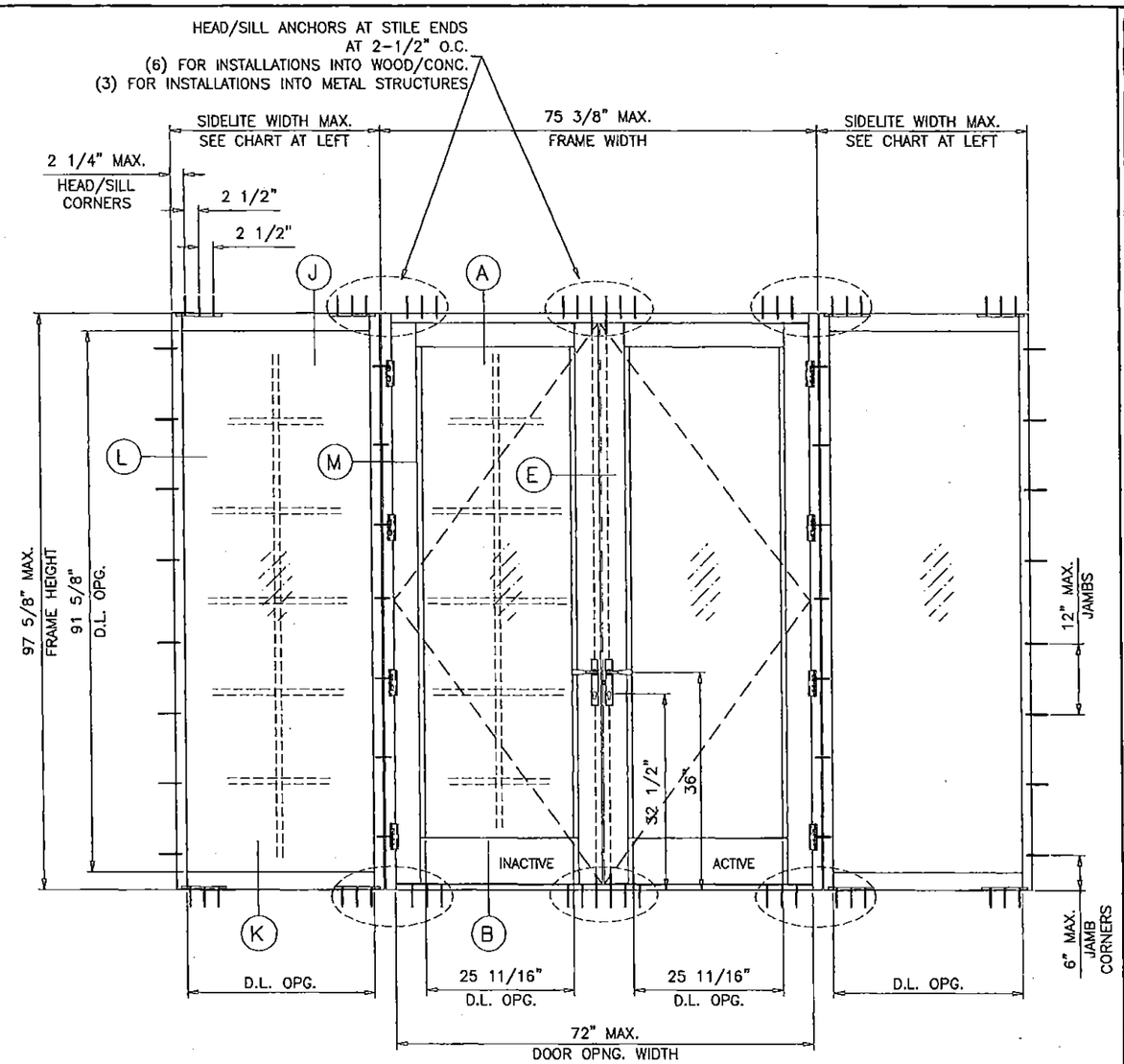

(OXXO)

GLASS D.L.O. DIMS. (SIDELITE)

D.L.O. HEIGHT = SIDELITE HEIGHT – 3.375"
D.L.O. WIDTH = SIDELITE WIDTH – 6.0"

NOTE:
FOR DOORS CAPACITY SEE SHEET 1
(MAX. DOOR FRAME WIDTH = 75–3/8"
MAX. DOOR FRAME HEIGHT = 97–5/8")
FOR SIDELITE CAPACITIES SEE CHART ABOVE.
LOWER VALUES FROM DOORS OR SIDELITE
CHART WILL APPLY TO ENTIRE SYSTEM.

PRODUCT REVISED
as complying with the Florida Building Code
NOA-No. 15-1007.02
Expiration Date 08/19/2019
By
Miami-Dade Product Control

JAVAD AHMAD
LICENSE
No. 70592
4-28-16
STATE OF FLORIDA
PROFESSIONAL ENGINEER

AL-FAROOQ CORPORATION
ENGINEERS & PRODUCT DEVELOPMENT
9360 SUNSET DRIVE, SUITE 220
MIAMI, FLORIDA 33173 (C.A.N. 3538)
TEL. (305) 264-8100 FAX. (305) 262-6978

COMP–ANL\W04–37RC

SERIES RD45 ALUM ENTRANCE DOOR (L.M.I.)

RC Home Showcase, Inc.
16115 NW 52nd Ave.
Miami, FL. 33014
TEL. (305) 392–6214 FAX. (305) 260–6432

revisions:

no	date	by	description
G	12.17.13		REV. PER RER COMMENTS
H	09.22.15		UPDATED TO 2014 FBC
I	03.17.16		REV. PER RER COMMENTS
J	04.18.16		REV. PER RER COMMENTS

date: 05–09–04
scale: 1/2"=1'–0"
dr. by: HAMID
chk. by:

drawing no.
W04–37

sheet 3 of 10

LOCK OPTIONS SINGLE DOORS:

OPTION #1:

3 POINT LOCK SYSTEM BY 'AMESBURY'
WITH SURFACE MOUNT HANDLE AT 36" FROM BOTTOM
AND DEAD BOLT LOCKSET AT 32" FROM BOTTOM
KEY OPERATED ON EXTERIOR AND THUMB TURN ON
INTERIOR.

OPTION #2:

3 POINT LOCK SYSTEM BY 'HOPPE'
WITH SURFACE MOUNT HANDLE AT 36" FROM BOTTOM
AND DEAD BOLT LOCKSET AT 32-1/2' FROM BOTTOM
KEY OPERATED ON EXTERIOR AND THUMB TURN ON
INTERIOR.

LOCK OPTIONS DOUBLE DOORS:

OPTION #1:

ACTIVE LEAF:

3 POINT LOCK SYSTEM BY 'AMESBURY'
WITH SURFACE MOUNT HANDLE AT 36" FROM BOTTOM
AND DEAD BOLT LOCKSET AT 32" FROM BOTTOM
KEY OPERATED ON EXTERIOR AND THUMB TURN ON
INTERIOR.

INACTIVE LEAF

2 POINT LOCK SYSTEM BY 'AMESBURY'
SHOOT BOLTS ENGAGING SIMULTANEOUSLY AT HEAD & SILL
SURFACE MOUNT ACTUATING HANDLE AT 36" FROM BOTTOM

OPTION #2:

ACTIVE LEAF:

3 POINT LOCK SYSTEM BY 'HOPPE'
WITH SURFACE MOUNT HANDLE AT 36" FROM BOTTOM
AND DEAD BOLT LOCKSET AT 32-1/2' FROM BOTTOM
KEY OPERATED ON EXTERIOR AND THUMB TURN ON
INTERIOR.

INACTIVE LEAF

2 POINT LOCK SYSTEM BY 'HOPPE'
SHOOT BOLTS ENGAGING SIMULTANEOUSLY AT HEAD & SILL
SURFACE MOUNT ACTUATING HANDLE AT 36" FROM BOTTOM

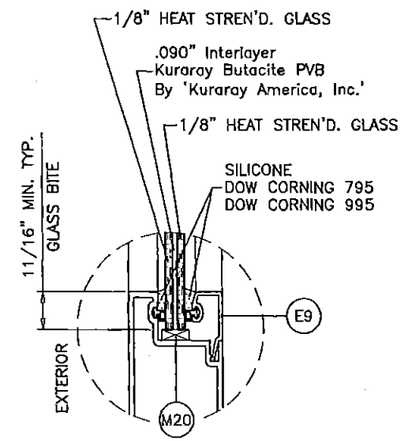

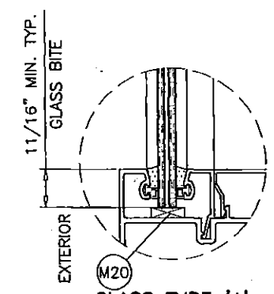

GLASS TYPE 'A'

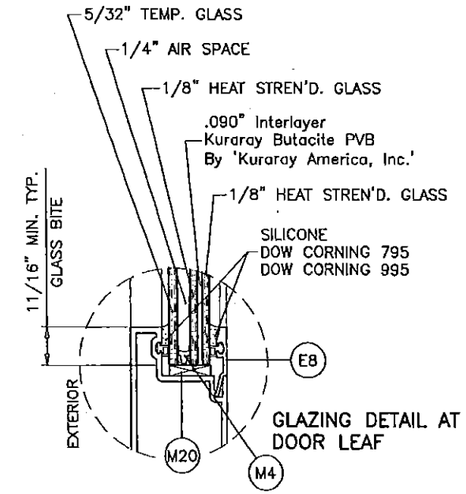

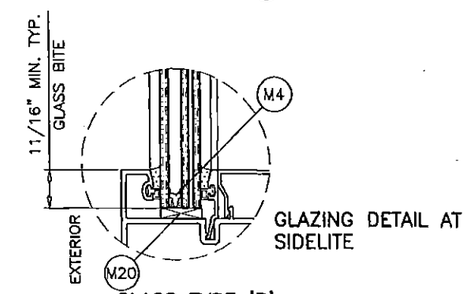

GLASS TYPE 'B'

GLAZING OPTIONS

PRODUCT REVISED
as complying with the Florida Building Code
NOA-No. 15-1007.02
Expiration Date 08/19/2019
By
Miami-Dade Product Control

JAVAD AHMAD
LICENSE
No. 70592
4-20-16
STATE OF FLORIDA
PROFESSIONAL ENGINEER

AL-FAROOQ CORPORATION
ENGINEERS & PRODUCT DEVELOPMENT
9360 SUNSET DRIVE, SUITE 220
MIAMI, FLORIDA 33173 (C.A.N. 3538)
TEL. (305) 264-8100 FAX. (305) 262-6978
COMP-ANL\W04-37RC

SERIES RD45 ALUM ENTRANCE DOOR (L.M.I.)

RC Home Showcase, Inc.
16115 NW 52nd Ave.
Miami, FL. 33014
TEL. (305) 392-6214 FAX. (305) 260-6432

revisions:

no	date	by	description
G	12.17.13		REV. PER RER COMMENTS
H	09.22.15		UPDATED TO 2014 FBC
I	03.17.16		REV. PER RER COMMENTS
J	04.18.16		NO CHANGE THIS SHEET

date: 05-09-04
scale: 3/8" = 1"
dr. by: HAMID
chk. by:

drawing no.
W04-37

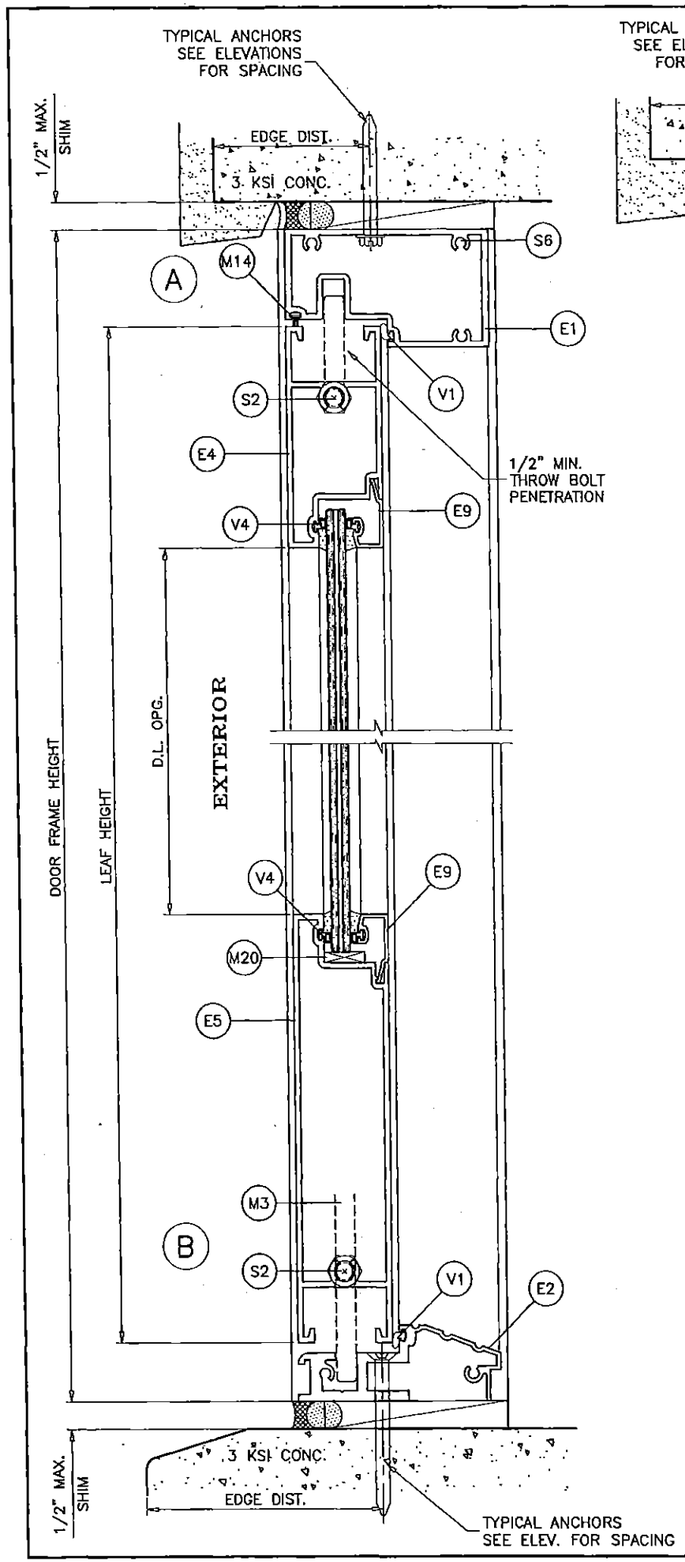

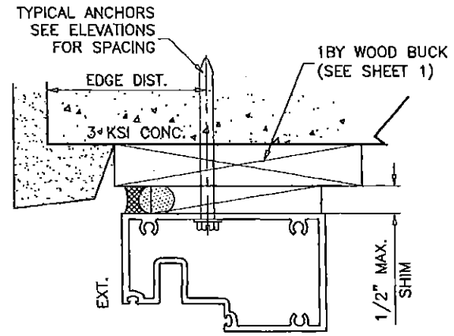

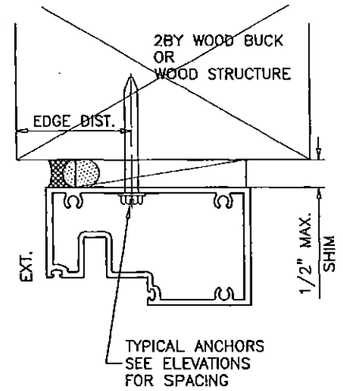

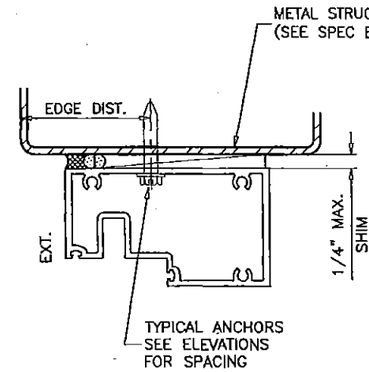

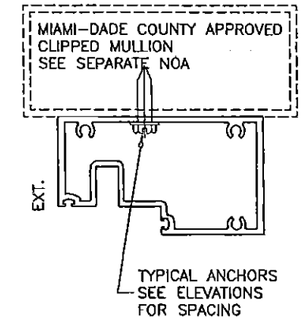

WOOD BUCKS AND METAL STRUCTURES NOT BY RC HOME SHOWCASE MUST SUSTAIN LOADS IMPOSED BY GLAZING SYSTEM AND TRANSFER THEM TO THE BUILDING STRUCTURE.

TYPICAL ANCHORS: SEE ELEV. FOR SPACING

1/4" DIA. HILTI KWIK-CON II (Fu=138 KSI, Fy=137 KSI)

INTO 2BY WOOD BUCKS OR WOOD STRUCTURES
1-1/2" MIN. PENETRATION INTO WOOD (HEAD/JAMBS)

THRU 1BY BUCKS INTO CONC. OR MASONRY
1-1/4" MIN. EMBED INTO CONCRETE (HEAD/JAMBS)

DIRECTLY INTO CONC. OR MASONRY
1-3/4" MIN. EMBED INTO CONCRETE (HEAD/SILL)
1-3/4" MIN. EMBED INTO CONC. OR MASONRY (JAMBS)

1/4" DIA. TEKS OR SELF DRILLING SCREWS (GRADE 5 CRS)

INTO MIAMI-DADE COUNTY APPROVED MULLIONS (MIN. THK. = 1/8")

INTO METAL STRUCTURES
STEEL : 1/8" THK. MIN. (Fy = 36 KSI MIN.)
ALUMINUM : 1/8" THK. MIN. (6063-T5 MIN.)
(STEEL IN CONTACT WITH ALUMINUM TO BE PLATED OR PAINTED)

TYPICAL EDGE DISTANCE

INTO CONCRETE AND MASONRY = 2-1/2" MIN.
INTO WOOD STRUCTURE = 1" MIN.
INTO METAL STRUCTURE = 3/4" MIN.

WOOD AT HEAD OR JAMBS SG = 0.55 MIN.
CONCRETE AT HEAD, SILL OR JAMBS f'c = 3000 PSI MIN.
C-90 GROUT FILLED NORMAL WEIGHT BLOCK AT JAMBS f'm = 2000 PSI MIN.

SEALANTS:

ALL FRAME AND PANEL JOINT, INSTALLATION SCREWS AND HEADS OF ANCHOR SCREWS AT SILL TO BE SEALED WITH WHITE/ALUM COLORED SILICONE.

PRODUCT REVISED
as complying with the Florida Building Code
NOA-No. 15-1007.02
Expiration Date 08/19/2019
By Miami-Dade Product Control

JAVAD AHMAD
LICENSE
No. 70592
STATE OF FLORIDA
PROFESSIONAL ENGINEER
4-20-19

DOOR DETAILS

AL-FAROOQ CORPORATION
ENGINEERS & PRODUCT DEVELOPMENT
9360 SUNSET DRIVE, SUITE 220
MIAMI, FLORIDA 33173 (C.A.N. 3538)
TEL. (305) 264-8100 FAX. (305) 262-6978

COMP-ANL\W04-37RC

SERIES RD45 ALUM ENTRANCE DOOR (L.M.I.)

RC Home Showcase, Inc.
16115 NW 52nd Ave.
Miami, FL. 33014
TEL. (305) 392-6214 FAX. (305) 260-6432

revisions:

no	date	by	description
G	12.17.13		REV. PER RER COMMENTS
H	09.22.15		UPDATED TO 2014 FBC
I	03.17.16		REV. PER RER COMMENTS
J	04.18.16		NO CHANGE THIS SHEET

date: 05-09-04
scale: 3/8" = 1"
dr. by: HAMID
chk. by:

drawing no.
W04-37

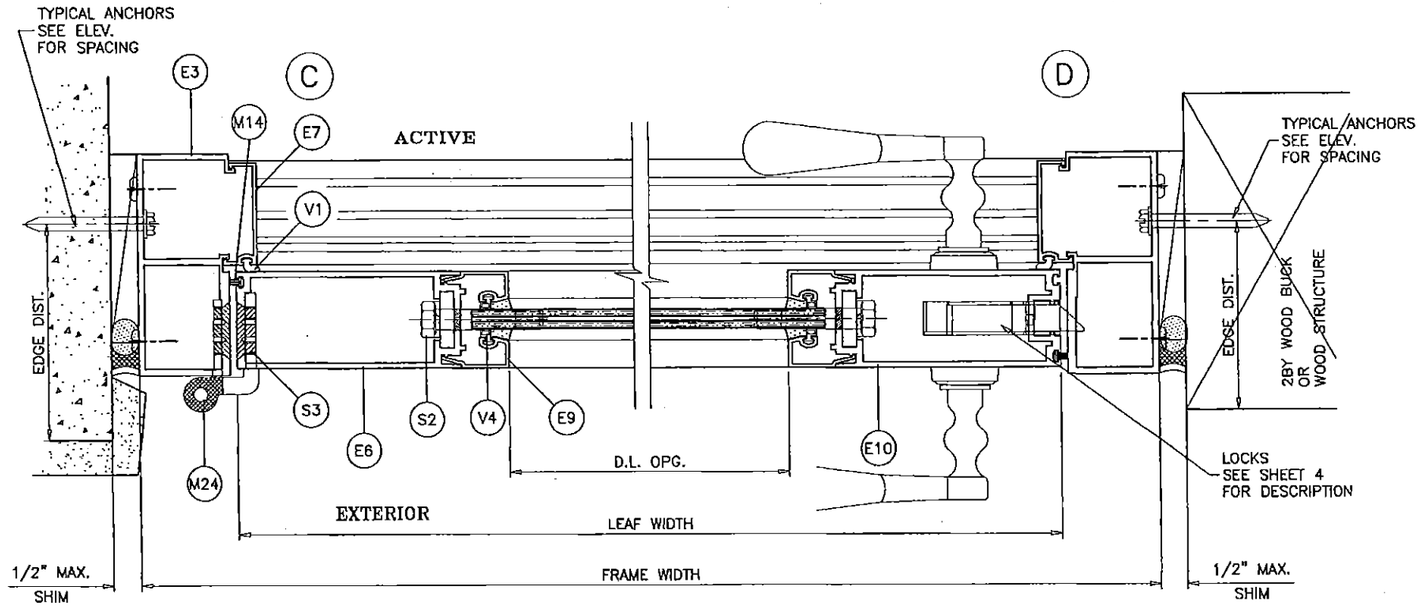

(X)

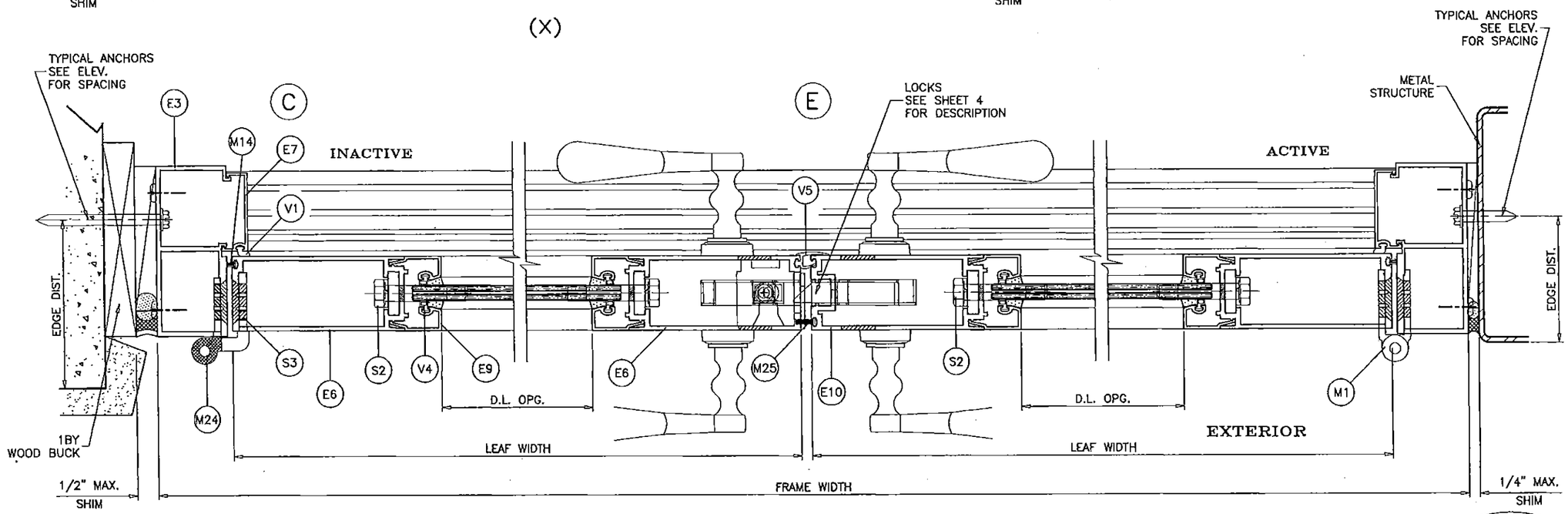

(XX)

PRODUCT REVISED
as complying with the Florida Building Code
NOA-No. 15-1007.02
Expiration Date 08/19/2019
By
Miami-Dade Product Control

DOOR DETAILS

JAVAD AHMAD
LICENSE
No. 70592
4-20-16
STATE OF FLORIDA
PROFESSIONAL ENGINEER

AL-FAROOQ CORPORATION
ENGINEERS & PRODUCT DEVELOPMENT
9360 SUNSET DRIVE, SUITE 220
MIAMI, FLORIDA 33173 (C.A.N. 3538)
TEL. (305) 264-8100 FAX. (305) 262-6978
COMP-ANL\W04-37RC

SERIES RD45 ALUM ENTRANCE DOOR (L.M.I.)

RC Home Showcase, Inc.
16115 NW 52nd Ave.
Miami, FL. 33014
TEL. (305) 392-6214 FAX. (305) 280-6432

revisions:

no	date	by	description
G	12.17.13		REV. PER RER COMMENTS
H	09.22.15		UPDATED TO 2014 FBC
I	03.17.16		REV. PER RER COMMENTS
J	04.18.16		NO CHANGE THIS SHEET

date: 05-09-04
scale: 3/8" = 1"
dr. by: HAMID
chk. by:

drawing no.
W04-37

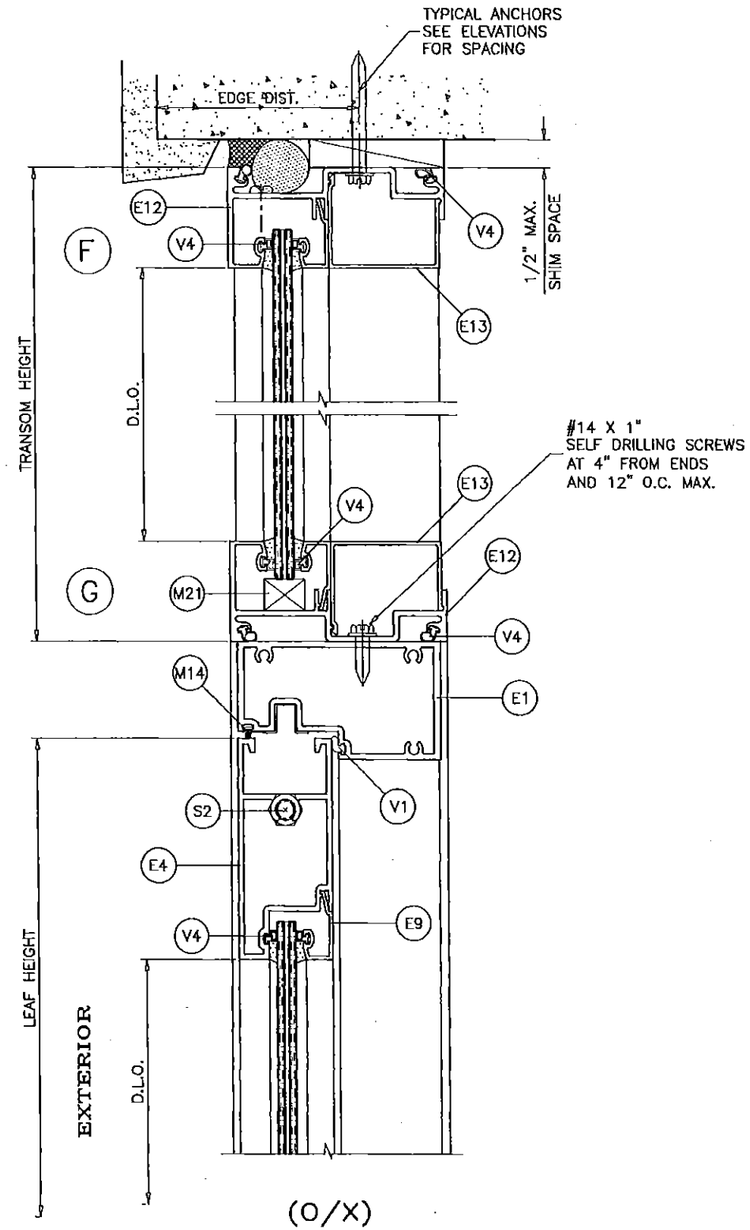

(O/X)
(O/XX)

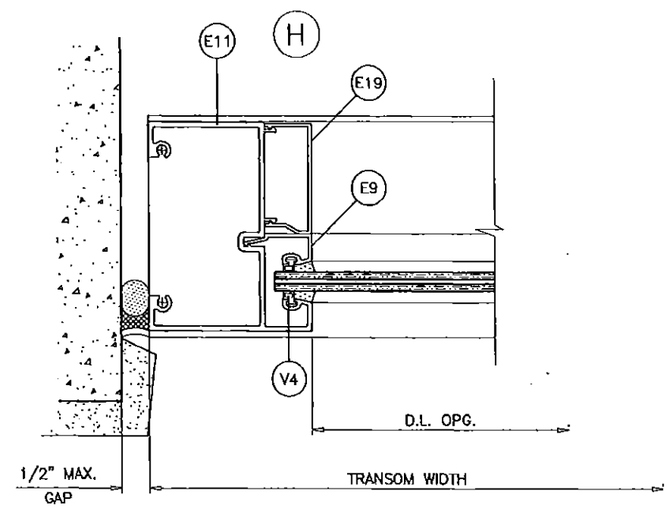

EXTERIOR

PRODUCT REVISED
as complying with the Florida Building Code
NOA-No. 15-1007.02
Expiration Date 08/19/2019
By
Miami-Dade Product Control

JAVAD AHMAD
LICENSE
No. 70592
4-20-16
STATE OF FLORIDA
PROFESSIONAL ENGINEER

TRANSOM DETAILS

AL-FAROOQ CORPORATION
ENGINEERS & PRODUCT DEVELOPMENT
9360 SUNSET DRIVE, SUITE 220
MIAMI, FLORIDA 33173 (C.A.N. 3538)
TEL. (305) 264-9100 FAX. (305) 262-6978
COMP-ANL\W04-37RC

SERIES RD45 ALUM ENTRANCE DOOR (L.M.I.)

RC Home Showcase, Inc.
16115 NW 52nd Ave.
Miami, FL. 33014
TEL. (305) 392-6214 FAX. (305) 260-6432

revisions:

no	date	by	description
G	12.17.13		REV. PER RER COMMENTS
H	09.22.15		UPDATED TO 2014 FBC
I	03.17.16		REV. PER RER COMMENTS
J	04.18.16		NO CHANGE THIS SHEET

date: 05-09-04
scale: 3/8" = 1"
dr. by: HAMID
chk. by:

drawing no.
W04-37

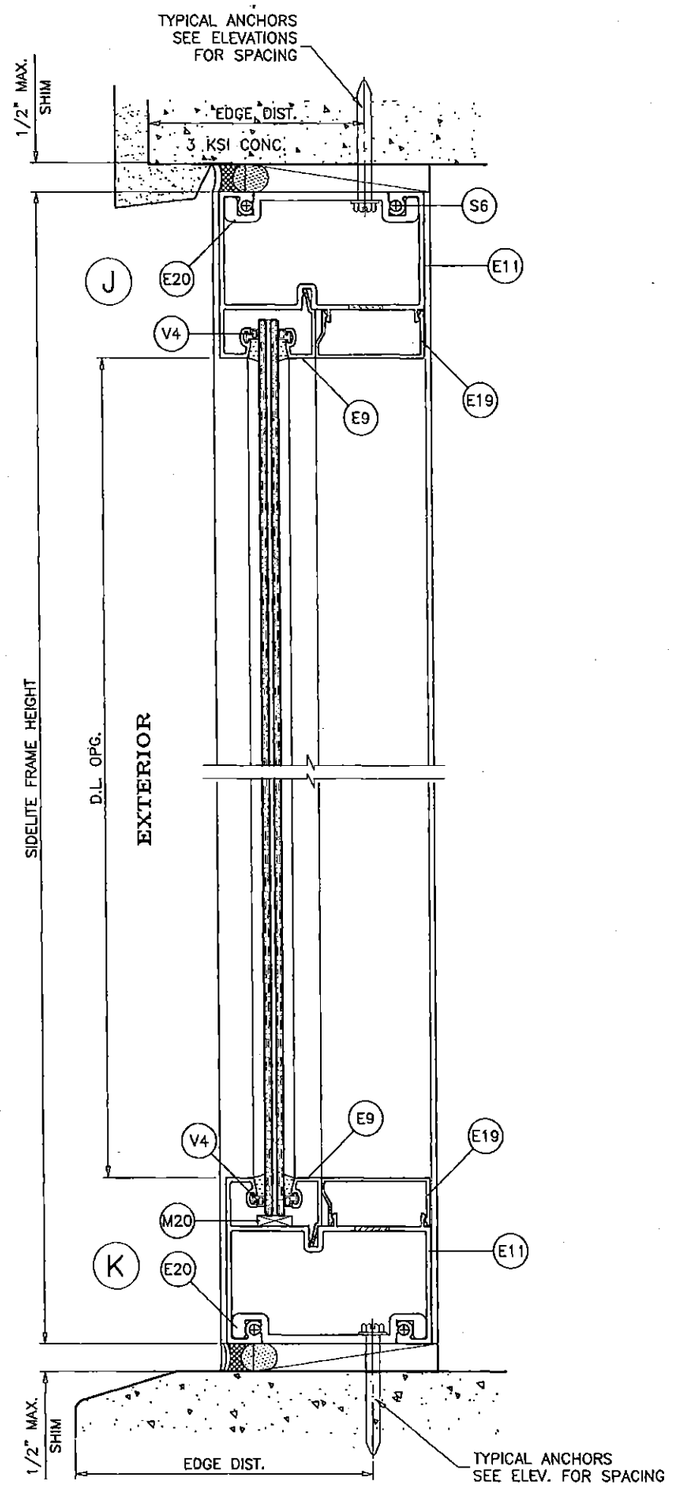

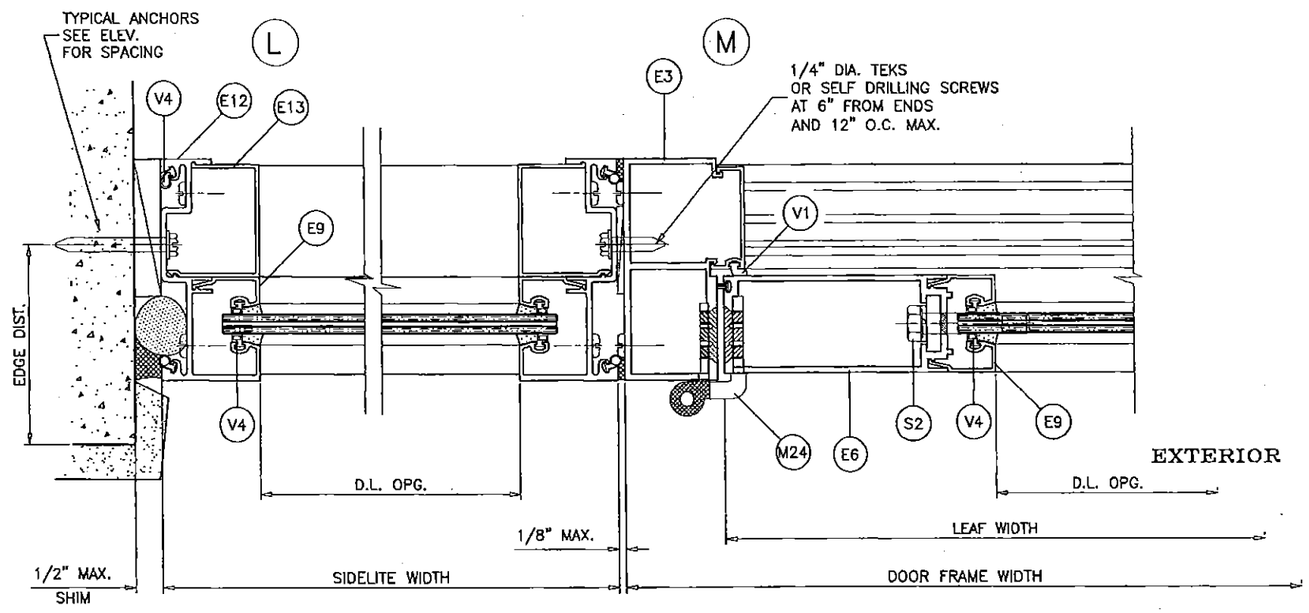

(DOOR W/ SIDELITE)

PRODUCT REVISED
as complying with the Florida Building Code
NOA-No. 15-1007.02
Expiration Date 08/19/2019
By
Miami-Dade Product Control

JAVAD AHMAD
LICENSE
No. 70692
4-20-16
STATE OF FLORIDA
PROFESSIONAL ENGINEER

SIDELITE DETAILS

AL-FAROOQ CORPORATION
ENGINEERS & PRODUCT DEVELOPMENT
9360 SUNSET DRIVE, SUITE 220
MIAMI, FLORIDA 33173 (C.A.N. 3538)
TEL. (305) 264-8100 FAX. (305) 262-5978

COMP-ANL\W04-37RC

SERIES RD45 ALUM ENTRANCE DOOR (L.M.I.)

RC Home Showcase, Inc.
16115 NW 52nd Ave.
Miami, FL. 33014
TEL (305) 392-6214 FAX. (305) 260-6432

revisions:

no	date	by	description
G	12.17.13		REV. PER RER COMMENTS
H	09.22.15		UPDATED TO 2014 FBC
I	03.17.16		REV. PER RER COMMENTS
J	04.18.16		NO CHANGE THIS SHEET

date: 05-09-04
scale: 3/8" = 1"
dr. by: HAMID
chk. by:

drawing no.
W04-37

sheet 8 of 10

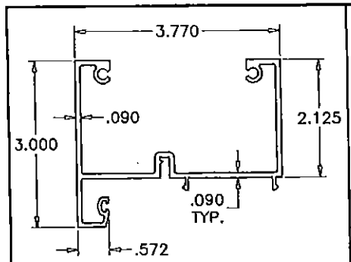

(E11) SIDELITE HEAD/SILL TRANSOM JAMB

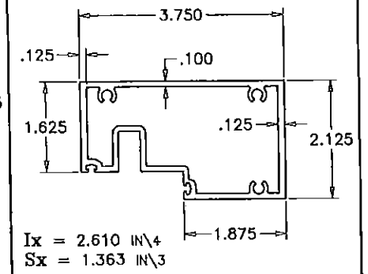

(E1) DOOR HEAD

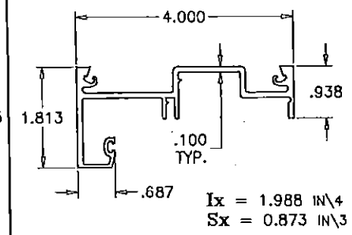

(E12) SIDELITE JAMB TRANSOM HEAD/SILL

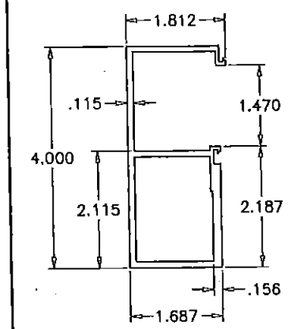

(E3) FRAME JAMB

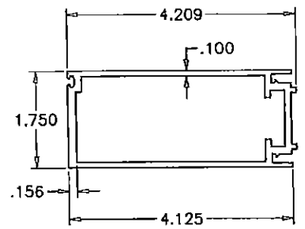

(E6) HINGE STILE INACTIVE LOCK STILE

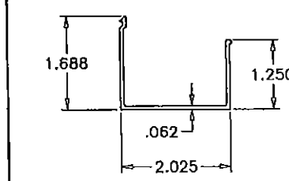

(E13) SNAP COVER

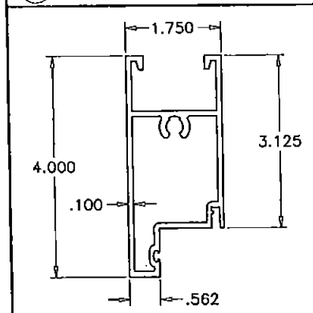

(E4) TOP RAIL

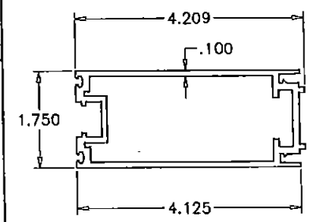

(E10) ACTIVE LEAF LOCK STILE

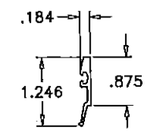

(E8) GLAZING BEAD (LAM. INSUL. GLASS)

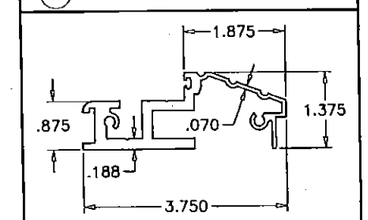

(E2) FRAME SILL

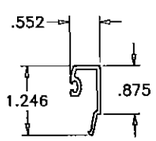

(E9) GLAZING BEAD (LAM. GLASS)

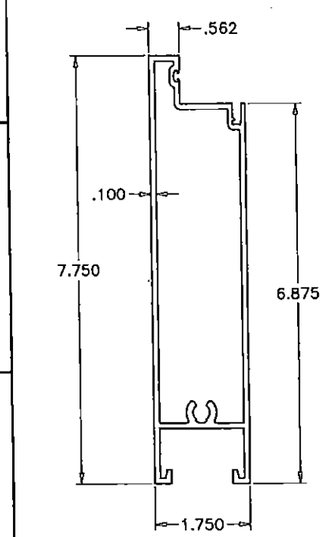

(E5) BOTTOM RAIL

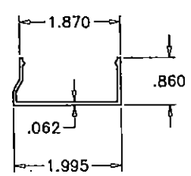

(E19) INTERIOR SNAP COVER

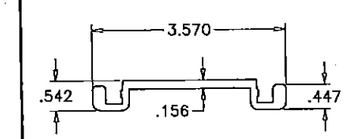

(E20) ANCHOR CLIP

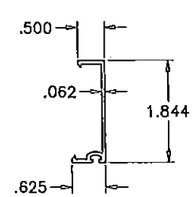

(E7) VERT. JAMB STOP

ITEM #	NUMBER	REQD.	DESCRIPTION	MATERIAL	MANF./SUPPLIER/REMARKS
E1	RD45-023	1	FRAME HEAD	6005-T5	–
E2	RD45-024	1	FRAME SILL	6063-T6	–
E3	RD45-022	2	FRAME JAMB	6063-T6	–
E4	RD45-004	1/LEAF	TOP RAIL	6063-T6	–
E5	RD45-021	1/ LEAF	BOTTOM RAIL	6063-T6	–
E6	RD45-006	2/ LEAF	HINGE STILE/INACTIVE LEAF LOCK STILE	6005-T5	–
E7	RD45-002	2	VERTICAL JAMB STOP	6063-T6	–
E8	RD45-010	AS REQD.	GLAZING BEAD (LAM. INSUL. GLASS)	6063-T6	–
E9	RD45-007	AS REQD.	GLAZING BEAD (LAM. GLASS)	6063-T6	–
E10	RD45-017A	AS REQD.	LOCK STILE ACTIVE LEAF	6005-T5	–
E11	RD45-014	AS REQD.	SIDELITE HEAD/SILL, TRANSOM JAMB	6005-T5	–
E12	RD45-015	AS REQD.	JAMB AT SIDE LITE, HEAD/SILL AT TRANSOM	6063-T6	–
E13	RD45-016	AS REQD.	SNAP COVER	–	–
E19	RD45-029	AS REQD.	INTERIOR SNAP COVER	–	–
E20	RD45-030	AS REQD.	ANCHOR CLIP, 8" LONG	6063-T6	–
M1	RD45-M01	4/ LEAF	HINGE ASSEMBLY	6005-T5	–
M3	RD45-M03	AS REQD.	FLUSH BOLT AT 3 POINT LOCK	–	–
M4	–	AS REQD.	XL EDGE SPACER FOR INSUL. GLASS	ST/ST	CARDINAL
M14	W31384NK	AS REQD.	WEATHERSTRIPPING	–	–
M20	–		1/2" x 3/16" x 4" SETTING BLOCK (LAM. GLASS) 3/4" x 3/16" x 4" SETTING BLOCK (INSUL. LAM. GLASS)	NEOPRENE	6" FROM EACH END LOWE, DUROMETER 85±5 SHORE A
M21	–		1/2" x 3/4" x 4" SETTING BLOCK.	NEOPRENE	6" FROM EACH END & MIDSPAN LOWE, DUROMETER 85±5 SHORE A
M24	RD45-M13	4/ LEAF	HANDICAP OFFSET HINGE ASSEMBLY	6005-T5	–
M25	W31421NK	AS REQD.	WEARHERSTRIPPING	–	–
V1	Q375T270		DOOR W'STRIPPING	FOAM	Q-LON
V2	V-059		OFFSET BULB VINYL WSTP.	PVC	
V4	V-009		BULB W'STRIPPING, DUROMETER 75±5 SHORE A	PVC	WIBORG, WV-3289
V5	V-065		PEROXIDE THREAD-IN FINGER	–	TREMCO
S2		AS REQD.	3/8-16 X 2" LG. FULL THREAD HX.HD..	–	1 PER CONER
S3		4/ HINGE	#12 – 24 X 3/4" LG. PHIL. F.H. MACHINE SCREW	ST/ST	HINGE INSTALLATION SCREWS
S6		AS REQD.	#12 X 1-1/4" LG. PHIL. SMS.	ST/ST	ASSEMBLY FASTENERS

SEE SHEET 4 FOR LOCKS OPTIONS AND DESCRIPTION

PRODUCT REVISED
as complying with the Florida Building Code
NOA-No. 15-1007.02
Expiration Date 08/19/2019
By
Miami-Dade Product Control

JAVAD AHMAD
LICENSE
No 70592
4-20-16
STATE OF FLORIDA
PROFESSIONAL ENGINEER

AL-FAROOQ CORPORATION
ENGINEERS & PROJECT DEVELOPMENT
9360 SUNSET DRIVE, SUITE 220
MIAMI, FLORIDA 33173 (C.A.N. 3538)
TEL. (305) 264-8100 FAX. (305) 262-8978
COMP-ANL\W04-37RC

SERIES RD45 ALUM ENTRANCE DOOR (L.M.I.)

RC Home Showcase, Inc.
16115 NW 52nd Ave.
Miami, FL. 33014
TEL. (305) 392-6214 FAX. (305) 260-6432

revisions:

no	date	by	description
G	12.17.13		REV. PER RER COMMENTS
H	09.22.15		UPDATED TO 2014 FBC
I	03.17.16		REV. PER RER COMMENTS
J	04.18.16		NO CHANGE THIS SHEET

date: 05-09-04
scale: 3/8" = 1"
dr. by: HAMID
chk. by:

drawing no.
W04-37

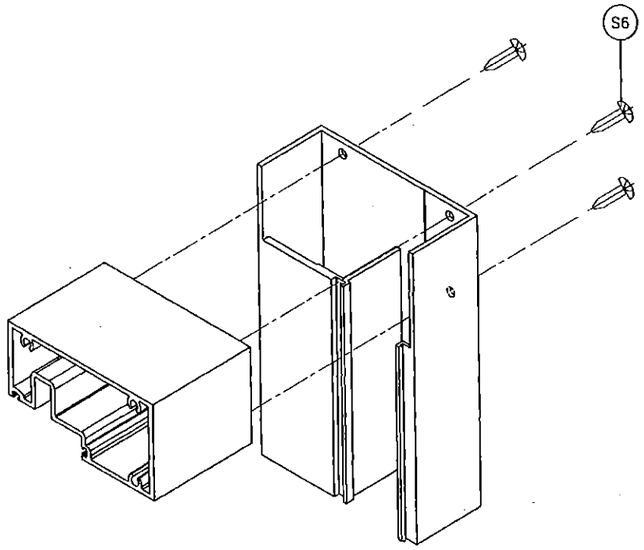

DOOR TOP CORNER

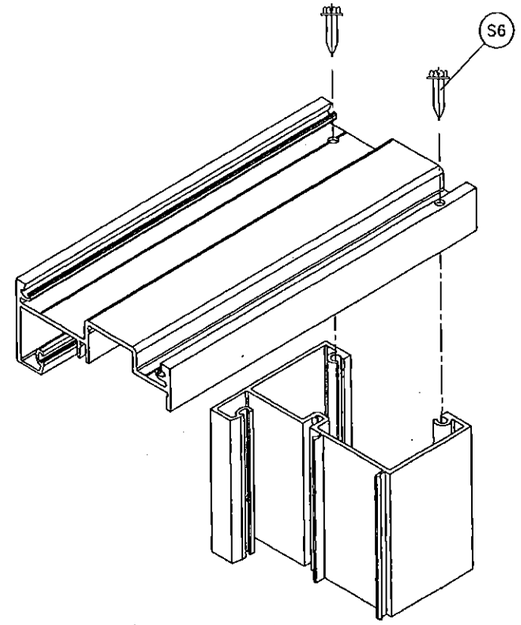

TRANSOM TOP/BOTTOM CORNER

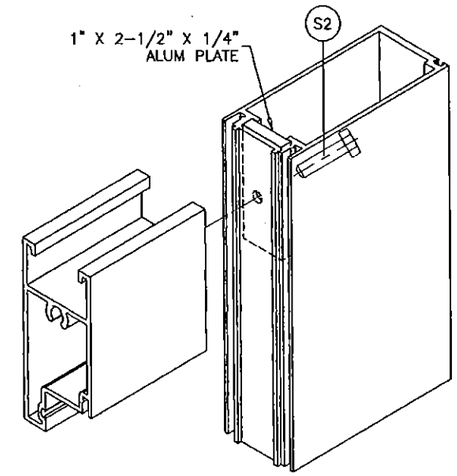

LEAF TOP CORNER

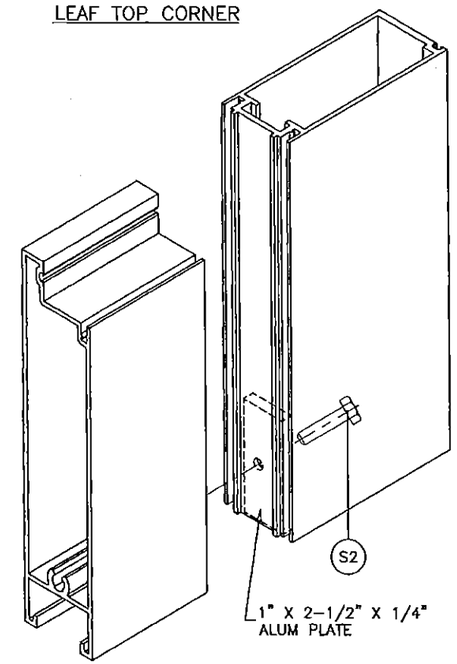

LEAF BOTTOM CORNER

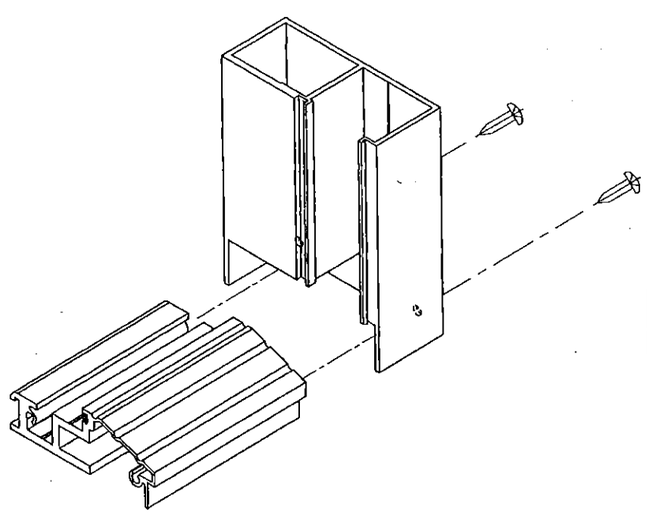

DOOR BOTTOM CORNER

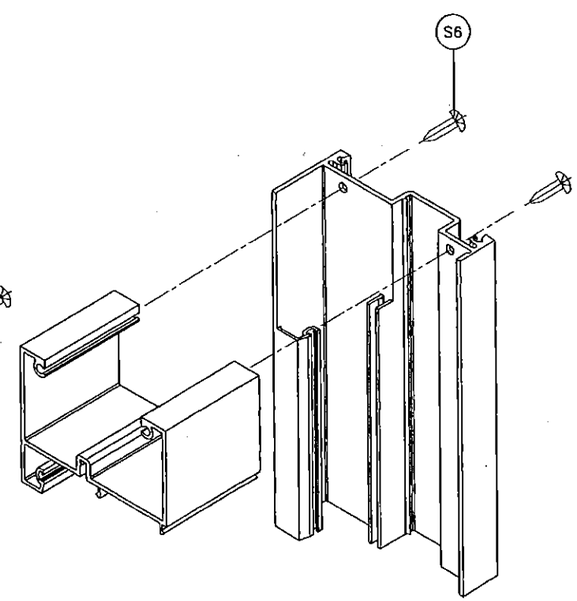

SIDELITE TOP/BOTTOM CORNER

PRODUCT REVISED
as complying with the Florida Building Code
NOA-No. 15-1007.02
Expiration Date 08/19/2019
By
Miami-Dade Product Control

JAVAD AHMAD
LICENSE
No. 70592
4-20-16
STATE OF FLORIDA
PROFESSIONAL ENGINEER

AL-FAROOQ CORPORATION
ENGINEERS & PRODUCT DEVELOPMENT
9360 SUNSET DRIVE, SUITE 220
MIAMI, FLORIDA 33173 (C.A.N. 3538)
TEL. (305) 264-8100 FAX. (305) 262-6978
COMP-ANL\W04-37RC

SERIES RD45 ALUM ENTRANCE DOOR (L.M.I.)

RC Home Showcase, Inc.
16115 NW 52nd Ave.
Miami, FL. 33014
TEL. (305) 392-6214 FAX. (305) 260-6432

revisions:

no	date	by	description
G	12.17.13		REV. PER RER COMMENTS
H	09.22.15		NO CHANGE THIS SHEET
I	03.17.16		REV. PER RER COMMENTS
J	04.18.16		NO CHANGE THIS SHEET

date: 05-09-04
scale: 3/8" = 1"
dr. by: HAMID
chk. by:

drawing no.
W04-37