MIAMI-DADE COUNTY
PRODUCT CONTROL SECTION
11805 SW 26 Street, Room 208
Miami, Florida 33175-2474
T (786) 315-2590 F (786) 315-2599
www.miamidade.gov/economy

DEPARTMENT OF REGULATORY AND ECONOMIC RESOURCES (RER)
BOARD AND CODE ADMINISTRATION DIVISION

NOTICE OF ACCEPTANCE (NOA)

Industrial Louvers, Inc.
511 South 7th Street
Delano, MN 55328

SCOPE:

This NOA is being issued under the applicable rules and regulations governing the use of construction materials. The documentation submitted has been reviewed and accepted by Miami-Dade County RER-Product Control Section to be used in Miami Dade County and other areas where allowed by the Authority Having Jurisdiction (AHJ).

This NOA shall not be valid after the expiration date stated below. The Miami-Dade County Product Control Section (In Miami Dade County) and/or the AHJ (in areas other than Miami Dade County) reserve the right to have this product or material tested for quality assurance purposes. If this product or material fails to perform in the accepted manner, the manufacturer will incur the expense of such testing and the AHJ may immediately revoke, modify, or suspend the use of such product or material within their jurisdiction. RER reserves the right to revoke this acceptance, if it is determined by Miami-Dade County Product Control Section that this product or material fails to meet the requirements of the applicable building code. This product is approved as described herein, and has been designed to comply with the Florida Building Code, including the High Velocity Hurricane Zone.

DESCRIPTION: Model 653XPDC 6" Deep Drainable Blade Aluminum Louver System

APPROVAL DOCUMENT: Drawing No. **DCT**, titled "653XPDC 6" Deep Drainable Blade Louver", sheets 1 through 8 of 8, dated 10/07/2009, with revision 7 dated 08/06/2013, prepared by Industrial Louvers, Inc, signed and sealed by L. David Rice, P.E., bearing the Miami-Dade County Product Control renewal stamp with the Notice of Acceptance number and expiration date by the Miami-Dade County Product Control Section.

MISSILE IMPACT RATING: Large and Small Missile Impact Resistant

LABELING: Each unit shall bear a permanent label with the manufacturer's name or logo, city, state, model/series, and following statement: "Miami-Dade County Product Control Approved", unless otherwise noted herein.

RENEWAL of this NOA shall be considered after a renewal application has been filed and there has been no change in the applicable building code negatively affecting the performance of this product.

TERMINATION of this NOA will occur after the expiration date or if there has been a revision or change in the materials, use, and/or manufacture of the product or process. Misuse of this NOA as an endorsement of any product, for sales, advertising or any other purposes shall automatically terminate this NOA. Failure to comply with any section of this NOA shall be cause for termination and removal of NOA.

ADVERTISEMENT: The NOA number preceded by the words Miami-Dade County, Florida, and followed by the expiration date may be displayed in advertising literature. If any portion of the NOA is displayed, then it shall be done in its entirety.

INSPECTION: A copy of this entire NOA shall be provided to the user by the manufacturer or its distributors and shall be available for inspection at the job site at the request of the Building Official.

This NOA **renews NOA # 14-1204.01** and consists of this page 1 and evidence page E-1, as well as approval document mentioned above.

The submitted documentation was reviewed by **Carlos M. Utrera, P.E.**

MIAMI-DADE COUNTY APPROVED

01/28/2016

NOA No. 15-1109.03
Expiration Date: February 2, 2021
Approval Date: February 4, 2016

NOTICE OF ACCEPTANCE: EVIDENCE SUBMITTED

A. DRAWINGS ***"Submitted under NOA # 13-0909.09"***

1. Drawing No. **DCT**, titled "653XPDC 6" Deep Drainable Blade Louver", sheets 1 through 8 of 8, dated 10/07/2009, with revision 7 dated 08/06/2013, prepared by Industrial Louvers, Inc, signed and sealed by L. David Rice, P.E.

B. TESTS ***"Submitted under NOA # 10-1006.15"***

1. Test reports on 1) Uniform Static Air Pressure Test, Loading per FBC TAS 202-94
   2) Large Missile Impact Test per FBC, TAS 201-94
   3) Cyclic Wind Pressure Loading per FBC, TAS 203-94
   along with marked-up drawings and installation diagram of three Series/Model 653XPDC, aluminum louvers, prepared by Architectural Testing, Inc., Test Report No. **99545.01-202-18**, dated 08/31/2010, signed and sealed by Joseph A. Reed, P.E.

C. CALCULATIONS ***"Submitted under NOA # 13-0909.09"***

1. Model 653 XPDC 6" Drainable blade louver calculations, prepared by Rice Engineering, dated 09/03/2013, signed and sealed by L. David Rice, P.E.

"Submitted under NOA # 10-1006.15"

2. Model 653 XPDC 6" drainable blade louver calculations, prepared by Rice Engineering, dated 09/28/2010, signed and sealed by L. David Rice, P.E.

D. QUALITY ASSURANCE

1. Miami-Dade Department of Regulatory and Economic Resources (RER)

E. MATERIAL CERTIFICATIONS

1. None.

F. STATEMENTS ***"Submitted under NOA # 14-1204.01"***

1. Statement letter of code conformance to the 5th edition (2014) FBC issued by Rice Engineering, dated 08/25/2014, signed and sealed by L. David Rice, P.E.

"Submitted under NOA # 13-0909.09"

2. Statement letter of no financial Interest issued by Rice Engineering, dated 09/03/2013, signed and sealed by L. David Rice, P.E.

01/28/2016

Carlos M. Utrera, P.E.
Product Control Examiner
NOA No. 15-1109.03
Expiration Date: February 2, 2021
Approval Date: February 4, 2016

GENERAL NOTES:

1. IT SHALL BE THE RESPONSIBILITY OF THE PERMIT HOLDER TO VERIFY THE STRUCTURAL INTEGRITY OF THE EXISTING STRUCTURE TO SUPPORT THE LOADS SUPERIMPOSED BY THE LOUVERS.
2. THESE LOUVER SYSTEMS HAVE BEEN DESIGNED AND TESTED IN ACCORDANCE WITH THE FLORIDA BUILDING CODE (FBC) AND FBC PROTOCOLS TAS-201, 202, & 203 FOR AREAS INCLUDING HIGH VELOCITY HURRICANE ZONES.
3. EACH LOUVER ASSEMBLY SHALL BE PERMANENTLY LABELED AS FOLLOWS:

   INDUSTRIAL LOUVERS, INC MODEL 653XPDC
   DELAND, FL
   MIAMI-DADE COUNTY PRODUCT CONTROL APPROVED
4. ALL CONCRETE SUBSTRATE SHALL BE MINIMUM 4000 p.s.i.
5. ALL GROUT FILLED CMU SHALL BE MINIMUM 1500 p.s.i.
6. ALL WOOD SUBSTRATE SHALL BE MINIMUM G = 0.42 DENSITY FOR JAMB ANCHORAGE AND G = 0.65 FOR MULLION AND STIFFENER ANCHORAGE.
7. ALL METAL STUD SUBSTRATE SHALL BE MINIMUM 16 GAUGE AND MINIMUM Fy = 33 k.s.i.
8. ALL STRUCTURAL STEEL SUBSTRATE SHALL BE MINIMUM Fy = 36 k.s.i.
9. PANEL WIDTHS & HEIGHTS ARE LIMITED AS SHOWN IN ELEVATIONS AND DETAILS.
10. PANELS MAY BE HORIZONTALLY STACKED TO AN UNLIMITED WIDTH. VERTICAL STACKING MAY OCCUR PROVIDING A STRUCTURAL SUPPORT IS DESIGNED AND INSTALLED BY OTHERS TO WITHSTAND ALL LOADS SUPERIMPOSED BY THE LOUVERS. SINGLE, NON-REINFORCED PANELS MAY BE STACKED VERTICALLY TO AN UNLIMITED HEIGHT.
11. SEPARATION OF DISSIMILAR METALS MUST BE MAINTAINED PER SECTION 2003.8.4 OF THE FBC.
12. THIS SYSTEM HAS NOT BEEN TESTED FOR WATER INFILTRATION RESISTANCE AND IS NOT A WATER RESISTANT SYSTEM.
13. THE LOUVER IS TO BE INSTALLED IN A LOCATION WHERE THE ROOM BEHIND THE LOUVER IS DESIGNED TO DRAIN WATER PENETRATING INTO THE ROOM, AND THE ROOM WILL HOUSE WATER RESISTANT WATER PROOF EQUIPMENT, COMPONENTS, AND/OR SUPPLIES.

KEY NOTES:

K-01. SHELF ANGLES ATTACHED TO SURROUNDINGS PER SHELF ANGLE ANCHOR SCHEDULE. SHELF ANGLES WILL ONLY BE SUPPLIED IF THE PROJECT CONDITIONS REQUIRE IT.

K-10. 4" LONG 3 1/2" X 6" X 3/8" CLIP ANGLES ATTACHED TO SURROUNDINGS PER MULLION AND STIFFENER ANCHOR SCHEDULES.

K-11. CLIP ANGLES AT MULLIONS ATTACHED TO VERTICAL CHANNELS W/ (4) 1/2" X 2 1/2" SS THRU BOLTS.

K-12. CLIP ANGLES AT STIFFENERS ATTACHED TO VERTICAL CHANNELS W/ (4) 1/2" X 2" SS THRU BOLTS

K-13. VERTICAL CHANNELS AT MULLIONS FASTENED TOGETHER W/ 1/4" X 1" SS THRU BOLTS AT 24" O.C.

K-14. 4" LONG 2" X 2" X 1/8" CLIP ANGLES ANCHORED TO SURROUNDINGS PER JAMB ANCHOR SCHEDULE AT 10" O.C. AND NO MORE THAN 5" FROM ANY CORNER OR FRAME SPLICE. 4" LONG 2" X 4" X 1/8" CLIP ANGLES MAY BE SUBSTITUTED TO PROVIDE ADEQUATE FASTENER EDGE DISTANCES.

K-15. JAMB CLIP ANGLES ATTACHED TO SIDE FRAMES W/ (2) #12 X 1" SS SCREWS PER CLIP ANGLE.

K-21. BOTTOM FRAME ATTACHED TO SIDE FRAMES W/ (2) #8 X 5/8" SS SCREWS PER SIDE FRAME

K-22. TOP FRAME ATTACHED TO SIDE FRAMES W/ (2) #8 X 5/8" SS SCREWS PER SIDE FRAME.

K-23. BLADES ATTACHED TO SIDE FRAMES W/ (3) #12 X 1 1/2" SS SCREWS PER BLADE END.

K-24. VERTICAL CHANNELS ATTACHED TO EACH BLADE AND EACH BLADE BRACE W/ (1) #12 X 3/4" SS SCREW.

PRODUCT RENEWED
as complying with the Florida
Building Code
Acceptance No 15-1109.03
Expiration Date 02/02/2021
By
Miami Dade Product Control

PRODUCT REVISED
as complying with the Florida
Building Code
Acceptance No 14-1704.01
Expiration Date 02/02/2016
By
Miami Dade Product Control

RICE ENGINEERING
105 School Creek Trail
Luxemburg, WI 54217
Phone: 920.845.1042
Fax: 920.845.1048
www.rice-inc.com

Florida Firm No: F-01000005061
Certificate of Authorization: #9000
L. David Rice
Registration No: 50023

SHELF ANGLE ANCHOR SCHEDULE (SEE DETAIL 3, SHEET 4)

ITEM	QUANTITY	DESCRIPTION	WHERE USED	SUBSTRATE	MIN. EMB.	MIN. EDGE DIST.	MIN. SPACING
24	1 PER MULLION OR STIFFENER END	8" LONG 4" X 6" X 1/2" SHELF ANGLE	0"-60" TALL LOUVERS	N.A.	N.A.	N.A.	N.A.
25	1 PER MULLION OR STIFFENER END	20" LONG 4" X 6" X 1/2" SHELF ANGLE	60"-150" TALL LOUVERS	N.A.	N.A.	N.A.	N.A.
SA11	2 PER SHELF ANGLE	1/2" DIA. S.S. HILTI KWIK BOLT 3 ANCHORS	ITEM 24	CONCRETE	3 1/4"	3 1/2"	6" O.C.
SA12	2 PER SHELF ANGLE	1/2" DIA. CARBON STEEL HILTI HUS EZ ANCHORS	ITEM 24	CONCRETE	3"	3 1/2"	6" O.C.
SA13	2 PER SHELF ANGLE	1/2" DIA. S.S. THRU BOLT	ITEM 24	3/16" STEEL	N.A.	1"	1" O.C.
SA14	2 PER SHELF ANGLE	1/2" DIA. S.S. LAG BOLTS	ITEM 24	WOOD	4 1/4"	2"	6" O.C.
SA21	4 PER SHELF ANGLE	1/2" DIA. CARBON STEEL HILTI HUS EZ ANCHORS	ITEM 25	CONCRETE	3"	3 1/2"	6" O.C.
SA22	4 PER SHELF ANGLE	1/2" DIA. S.S. THRU BOLT	ITEM 25	3/16" STEEL	N.A.	1"	1" O.C.
SA23	2 PER SHELF ANGLE	1/2" DIA. S.S. THRU BOLT	ITEM 25	5/16" STEEL	N.A.	1"	1" O.C.
SA24	4 PER SHELF ANGLE	1/2" DIA. S.S. LAG BOLTS	ITEM 25	WOOD	4 1/4"	2"	6"

MULLION AND STIFFENER ANCHOR SCHEDULE (0"-60" TALL LOUVERS)

ITEM	QUANTITY	DESCRIPTION	SUBSTRATE	MIN. EMBEDMENT	MIN. EDGE DISTANCE	MIN. SPACING
23	2 PER MULLION OR STIFFENER END	4" LONG 3 1/2" X 6" X 3/8" CLIP ANGLE	N.A.	N.A.	N.A.	N.A.
36	1 PER CLIP ANGLE	1/2" DIA. SS BOLT THRU SHELF ANGLE	N.A.	N.A.	N.A.	N.A.
MA11	1 PER CLIP ANGLE	1/2" DIA. SS HILTI KWIK BOLT 3	CONCRETE	3 1/4"	3 1/2"	N.A.
MA12	1 PER CLIP ANGLE	1/2" DIA. SS THRU BOLT	1/4" STEEL	N.A.	1"	N.A.
MA13	1 PER CLIP ANGLE	1/2" DIA. SS LAG BOLT	WOOD	2 3/4"	2"	N.A.

MULLION AND STIFFENER ANCHOR SCHEDULE (60"-150" TALL LOUVERS)

ITEM	QUANTITY	DESCRIPTION	SUBSTRATE	MIN. EMBEDMENT	MIN. EDGE DISTANCE	MIN. SPACING
23	2 PER MULLION END	4" LONG 3 1/2" X 6" X 3/8" CLIP ANGLE	N.A.	N.A.	N.A.	N.A.
36	1 PER CLIP ANGLE	1/2" DIA. SS BOLT THRU SHELF ANGLE	N.A.	N.A.	N.A.	N.A.
MA21	1 PER CLIP ANGLE	1/2" DIA. SS HILTI KWIK BOLT 3	CONCRETE	3 1/4"	3 1/2"	N.A.
MA22	1 PER CLIP ANGLE	1/2" DIA. SS THRU BOLT	1/4" STEEL	N.A.	1"	N.A.
MA23	2 PER CLIP ANGLE	1/2" DIA. SS LAG BOLT	WOOD	2 3/4"	2"	2" O.C.

JAMB ANCHOR SCHEDULE

ITEM	QUANTITY	DESCRIPTION	SUBSTRATE	MIN. EMBEDMENT	MIN. EDGE DISTANCE	MIN. SPACING
21	N.A.	4" LONG 2" X 2" X 1/8" CLIP ANGLE	N.A.	N.A.	N.A.	N.A.
22	N.A.	4" LONG 2" X 4" X 1/8" CLIP ANGLE	N.A.	N.A.	N.A.	N.A.
JA11	1 PER CLIP ANGLE	1/4" DIA. S.S. HILTI KWIK BOLT 3	CONCRETE	2"	1 3/8"	N.A.
JA12	1 PER CLIP ANGLE	1/4" DIA. S.S. HILTI KWIK BOLT 3	CMU	2"	4"	N.A.
JA13	2 PER CLIP ANGLE	1/4" DIA. S.S. SELF DRILLING SCREW	METAL STUD	N.A.	1/2"	2" O.C.
JA14	1 PER CLIP ANGLE	1/4" DIA. S.S. SELF DRILLING SCREW	3/16" STEEL	N.A.	1/2"	N.A.
JA15	2 PER CLIP ANGLE	1/4" DIA. S.S. LAG BOLT	WOOD	2 3/4"	1"	2" O.C.

PARTS LIST (SEE SHEETS 7 - 8)

ITEM	DESCRIPTION	PART NUMBER	MATERIAL SPECIFICATIONS
01	LOUVER BOTTOM FRAME	FRM1126-M	6063-T6 ALUM. 0.091" THICK
02	LOUVER SIDE FRAME	FRM1149-M	6063-T6 ALUM. 0.125" THICK
03	LOUVER TOP FRAME	FRM1423-M	6063-T6 ALUM. 0.091" THICK
04	LOUVER BLADE	BL01534-M	6063-T6 ALUM. 0.091" THICK
05	BLADE BRACE, 3" LONG	HARP093168	6063-T6 ALUM. 0.150" THICK
11	1" X 6" X 2" X 1/8" CHANNEL	CH11048	6061-T6 ALUM.
12	1" X 7" X 2" X 3/16" CHANNEL	CH11060	6061-T6 ALUM.
21	4" LONG 2" X 2" X 1/8" CLIP ANGLE	HAR9335	6061-T6 ALUM.
22	4" LONG 2" X 4" X 1/8" CLIP ANGLE	HAR9340	6061-T6 ALUM.
23	4" LONG 3 1/2" X 6" X 3/8" CLIP ANGLE	HAR9365	6061-T6 ALUM.
24	8" LONG 4" X 6" X 1/2" SHELF ANGLE	N.A.	6061-T6 ALUM.
25	20" LONG 4" X 6" X 1/2" SHELF ANGLE	N.A.	6061-T6 ALUM.
31	#8 X 5/8" SS SD PH SM SCREW	FAS5042	18-8 SS CW TYPE-A
32	#12 X 3/4" SS SD PH SM SCREW	FAS5143	18-8 SS CW TYPE-A
33	#12 X 1" SS HWH SM SCREW	FAS5135	18-8 SS CW TYPE-A
34	#12 X 1 1/2" SS SD PH SM SCREW	FAS5144	18-8 SS CW TYPE-A
35	1/4"-20 X 1" SS HH BOLT W/ WASHERS AND NUT	FAS5155	18-8 SS CW CAP SCREW
36	1/2"-13 X 2" SS HH BOLT W/ WASHERS AND NUT	FAS5185	18-8 SS CW CAP SCREW
37	1/2"-13 X 2 1/2" SS HH BOLT W/ WASHERS AND NUT	FAS5189	18-8 SS CW CAP SCREW

INDUSTRIAL LOUVERS INC.
Tel:800.451.2951
www.industriallouvers.com
Delano, Minnesota
763.972.2951

653XPDC
6" Deep Drainable Blade Louver

Revisions

No.	By	Description	Date
-	DG	POST ENGINEERING UPDATE	07/14/13
2	DG	ASSEMBLY CLARIFICATION	02/11/13
3	DG	COMPLIANCE OFFICE REQUESTS	09/25/13
4	DG	TRIANGLE LOUVER ADDED	09/09/13
5	DM	COMPLIANCE TO A.I.L. TEST	08/25/13
6	DG	UPDATED TO COMPLY WITH 2010 FBC	08/04/13
7	DG	UPDATE PER COMPLIANCE OFFICE MARKUPS	08/04/13

Date: 10/07/2009
Drawn By: DG
Checked By:
Sheet No. 1 Of 8
Drawing No. DCT

Compliance Office Stamp

PRODUCT REVISED
as complying with the Florida
Building Code
Acceptance No 13-0909.07
Expiration Date 02/02/2016
By
Miami Dade Product Control

Engineering Stamp

L. DAVID RICE
LICENSEE
No. 50923
STATE OF
FLORIDA
PROFESSIONAL ENGINEER

NOV 25 2013

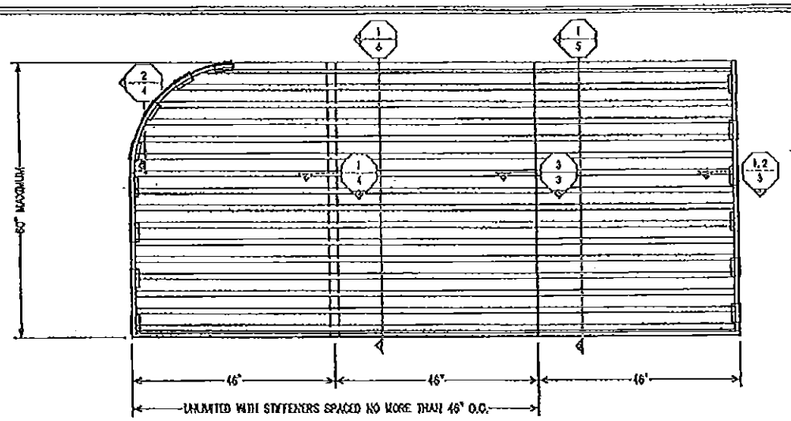

1/2 SPECIMEN #1
120 PSF DESIGN PRESSURE

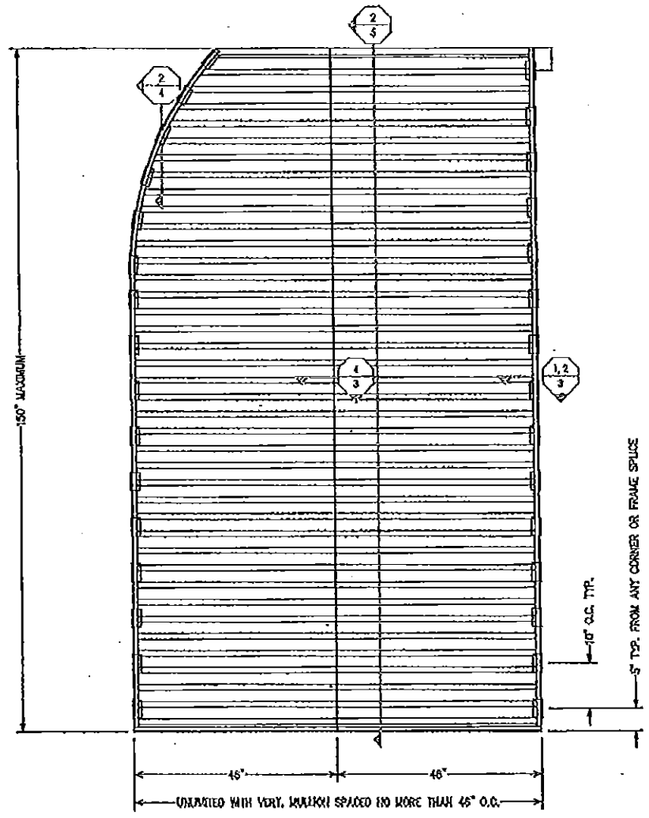

2/2 SPECIMEN #2
120 PSF DESIGN PRESSURE

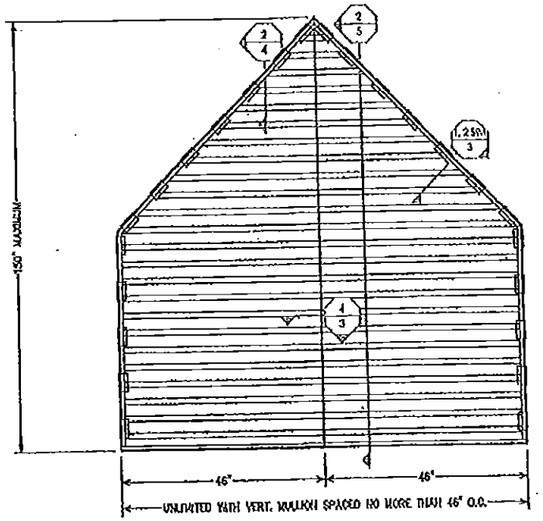

3/2 SPECIMEN #3
120 PSF DESIGN PRESSURE

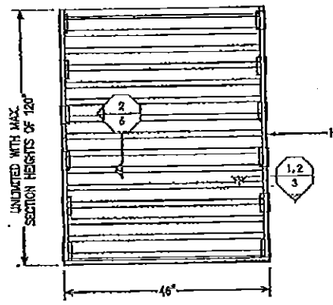

4/2 SPECIMEN #4
120 PSF DESIGN PRESSURE

PRODUCT RENEWED
as complying with the Florida Building Code
Acceptance No 15-1109.03
Expiration Date 02/02/2021
By _____
Miami-Dade Product Control

PRODUCT REVISED
as complying with the Florida Building Code
Acceptance No 14-1204.01
Expiration Date 02/02/2016
By _____
Miami-Dade Product Control

RICE ENGINEERING
105 School Creek Trail
Luxemburg, WI 54217
Phone: 920.845.1042
Fax: 920.845.1048
www.rice-inc.com

Florida Firm No: F-01000005061
Certificate of Authorization: #9090
L. David Rice
Registration No: 60023

APPROVED SPECIAL SHAPED LOUVERS

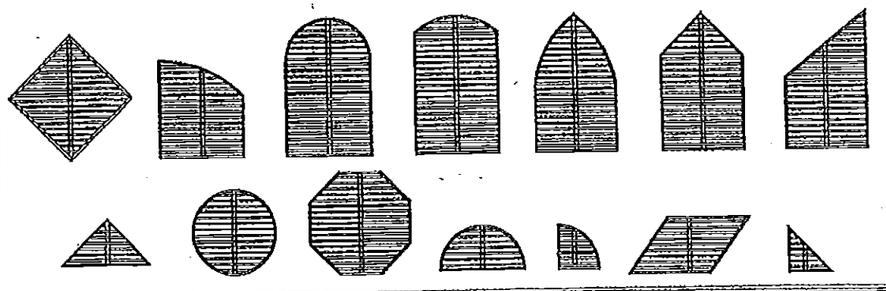

INDUSTRIAL LOUVERS INC.
Lou@IndustrialLouvers.com
www.IndustrialLouvers.com
Delano, Minnesota
763-972-2981

653XPDC
6" Deep Drainable Blade Louver

Revisions

No.	By	Description	Date
1	DG	POST ENGINEERING UPDATE	01/14/10
2	DG	ASSEMBLY CLARIFICATION	02/11/10
3	DG	COMPLIANCE OFFICE REQUESTS	02/25/10
4	DG	TRIANGLE LOUVER ADDED	03/05/10
5	DM	COMPLIANCE TO A-1L TEST	08/25/10
6	DG	UPDATED TO COMPLY WITH 2010 FBC	08/06/13
7	DG	UPDATE PER COMPLIANCE OFFICE MARKUPS	08/06/13

Dated 10/07/2009
Drawn By: DG
Checked By: _____
Sheet No. 2 Of 8
Drawing No. DCT

Compliance Office Stamp

PRODUCT REVISED
as complying with the Florida Building Code
Acceptance No 13-0909.09
Expiration Date 02/02/2016
By _____
Miami-Dade Product Control

Engineering Stamp

L. DAVID RICE
LICENSE
No. 60923
STATE OF
FLORIDA
PROFESSIONAL ENGINEER

NOV 25 2013

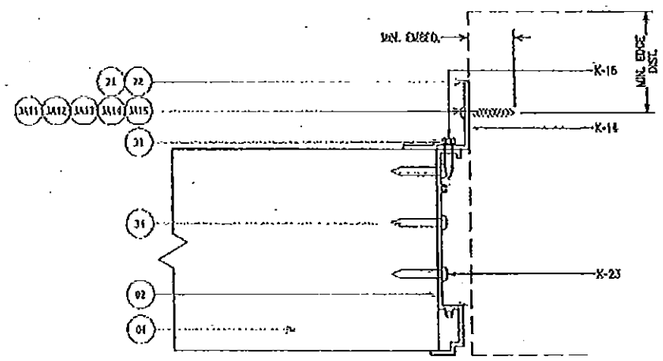

1/3 PLAN DETAIL @ SIDE FRAME
CLIP ANGLES TURNED OUT

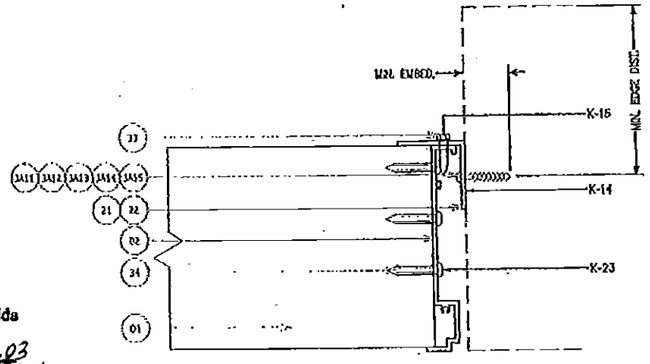

2/3 PLAN DETAIL @ SIDE FRAME
CLIP ANGLES TURNED IN

PRODUCT RENEWED
as complying with the Florida
Building Code
Acceptance No 15-1109.03
Expiration Date 02/02/2021
By
Miami Dade Product Control

PRODUCT REVISED
as complying with the Florida
Building Code
Acceptance No 14-1204.01
Expiration Date 02/02/2016
By
Miami Dade Product Control

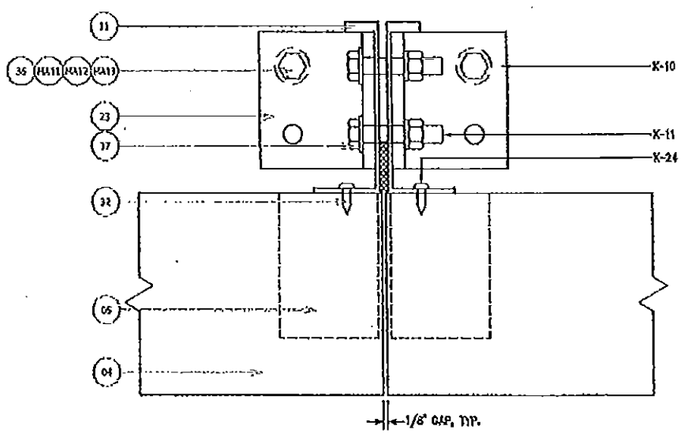

3/3 PLAN DETAIL @ VERTICAL MULLION
5" CHANNEL, 60" MAXIMUM HEIGHT

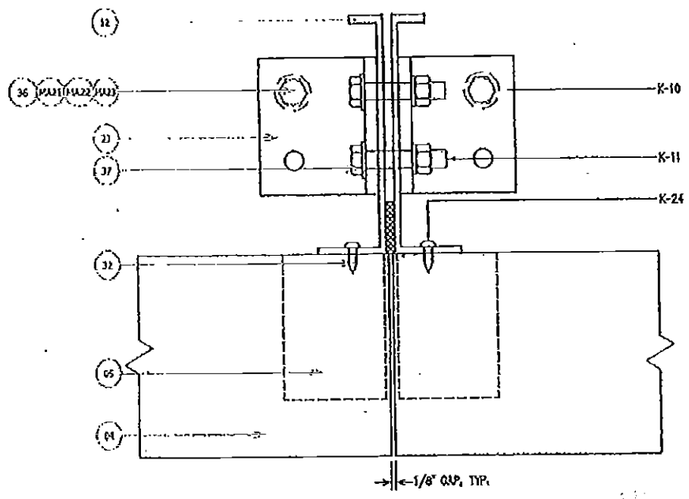

4/3 PLAN DETAIL @ VERTICAL MULLION
7" CHANNEL, 150" MAXIMUM HEIGHT

RICE ENGINEERING
105 School Creek Trail
Luxemburg, WI 54217
Phone: 920.845.1042
Fax: 920.845.1048
www.rice-inc.com

Florida Firm No: F-01000005061
Certificate of Authorization: #9090
L. David Rice
Registration No: 50923

Linie@industrialLouvers.com
www.industrialLouvers.com
Delano, Minnesota
763-972-2981

INDUSTRIAL LOUVERS INC.

653XPDC
6" Deep Drainable Blade Louver

Revisions

No.	By	Description	Date
1	DG	POST ENGINEERING UPDATE	01/14/10
2	DG	ASSEMBLY CLARIFICATION	02/11/10
3	DG	COMPLIANCE OFFICE REQUESTS	02/25/10
4	DG	TRIANGLE LOUVER ADDED	03/08/10
5	DM	COMPLIANCE TO A.T.I. TEST	08/25/10
6	DG	UPDATE TO COMPLY WITH 2010 FBC	09/06/13
7	DG	UPDATE PER COMPLIANCE OFFICE MARKUPS	08/06/13

Date: 10/07/2009
Drawn By: DG
Checked By:
Sheet No. 3 Of 8
Drawing No. DCT

Compliance Office Stamp

PRODUCT REVISED
as complying with the Florida
Building Code
Acceptance No 13-0909.09
Expiration Date 02/02/2016
By
Miami Dade Product Control

Engineering Stamp

L. DAVID RICE
LICENSE
No. 50923
STATE OF FLORIDA
PROFESSIONAL ENGINEER

NOV 25 2013

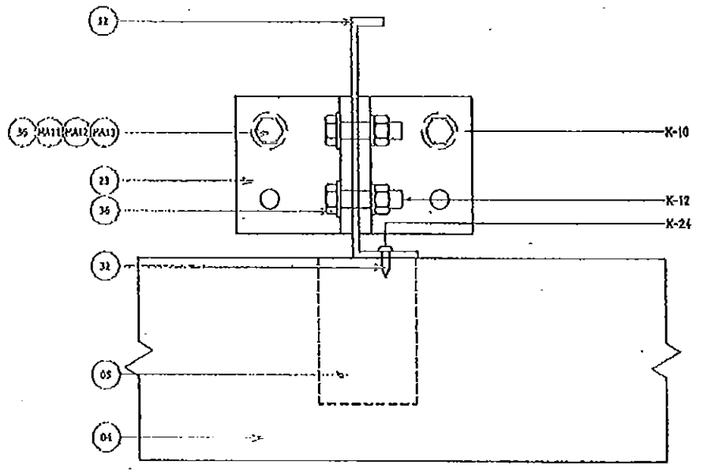

1/4 — PLAN DETAIL @ STIFFENER CHANNEL

7" CHANNEL, 60" MAXIMUM HEIGHT

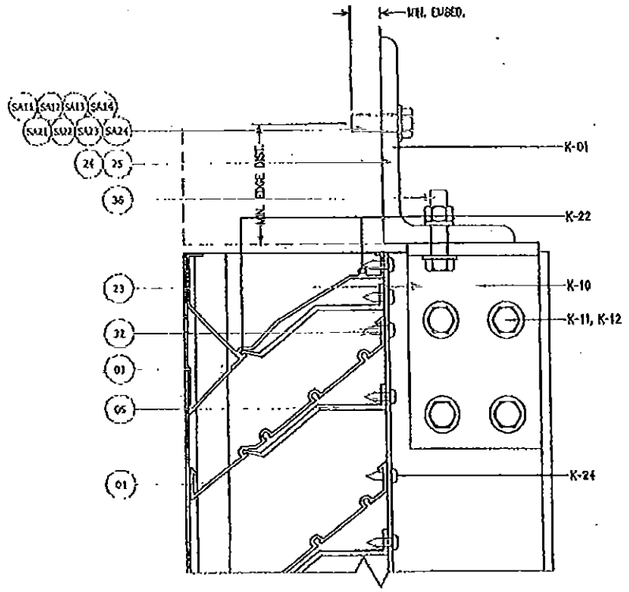

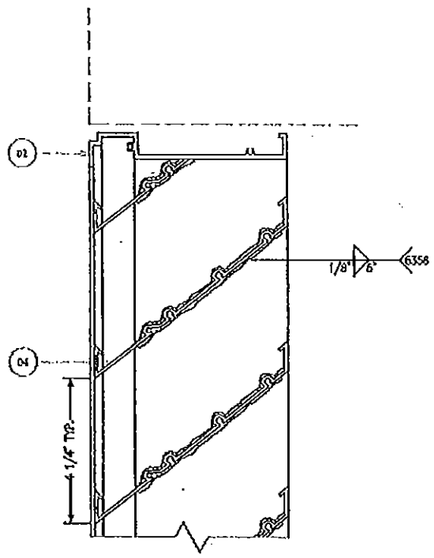

2/4 — VERTICAL SECTION @ SHAPED PORTION

PRODUCT RENEWED
as complying with the Florida
Building Code
Acceptance No 15-1109.03
Expiration Date 02/02/2016
By
Miami Dade Product Control

PRODUCT REVISED
as complying with the Florida
Building Code
Acceptance No 13-1209.01
Expiration Date 02/02/2016
By
Miami Dade Product Control

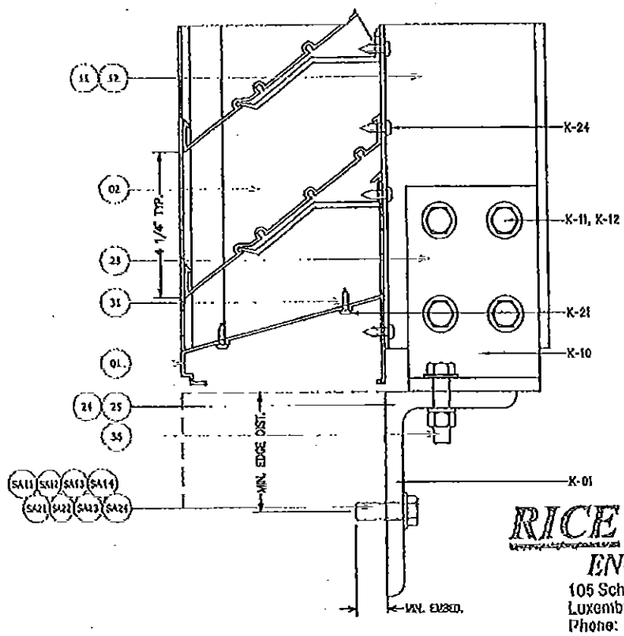

3/4 — VERTICAL SECTION @ SHELF ANGLE

ALL VERTICAL MULLIONS AND STIFFENER CHANNELS SIMILAR

RICE ENGINEERING
105 School Creek Trail
Luxemburg, WI 54217
Phone: 920.845 1042
Fax: 920.845.1048
www.rice-inc.com

Florida Firm No: F-01000005061
Certificate of Authorization: #9080
L. David Rice
Registration No: 50023

INDUSTRIAL LOUVERS INC.
LUKE@INDUSTRIALOUVERS.COM
www.industrialouvers.com
Delano, Minnesota
763-972-3981

653XPDC

6" Deep Drainable Blade Louver

Revisions

No.	By	Description	Date
1	DG	POST ENGINEERING UPDATE	01/24/10
2	DG	ASSEMBLY CLARIFICATION	02/11/10
3	DG	COMPLIANCE OFFICE REQUESTS	02/25/10
4	DG	TRIANGLE LOUVER ADDED	03/08/10
5	DM	COMPLIANCE TO A.I.L. TEST	08/25/10
6	DG	UPDATE TO COMPLY WITH 2010 FBC	08/04/13
7	DG	UPDATE PER COMPLIANCE OFFICE MARKUPS	08/04/13

Date: 10/07/2009
Drawn By: DG
Checked By: -
Sheet No. 4 Of 8
Drawing No. DCT

Compliance Office Stamp

PRODUCT REVISED
as complying with the Florida
Building Code
Acceptance No 13-0909.09
Expiration Date 02/02/2016
By
Miami Dade Product Control

Engineering Stamp

L. DAVID RICE LICENSE No. 50923 STATE OF FLORIDA PROFESSIONAL ENGINEER

NOV 25 2013

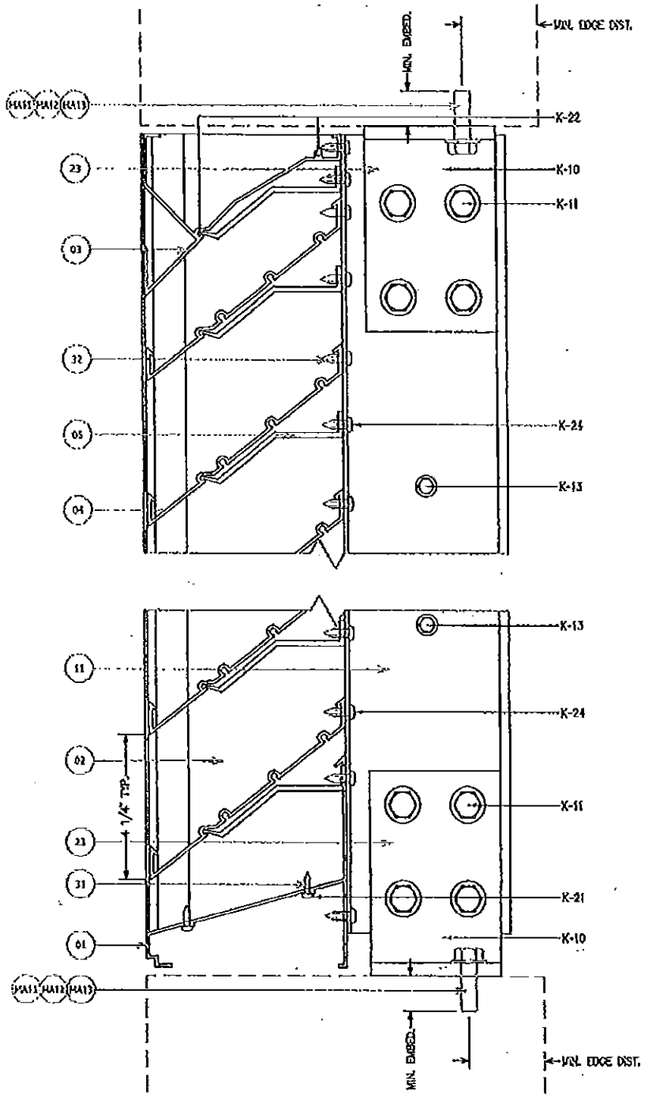

1/5 VERTICAL SECTION @ VERTICAL MULLION

5" CHANNEL, 60" MAXIMUM HEIGHT

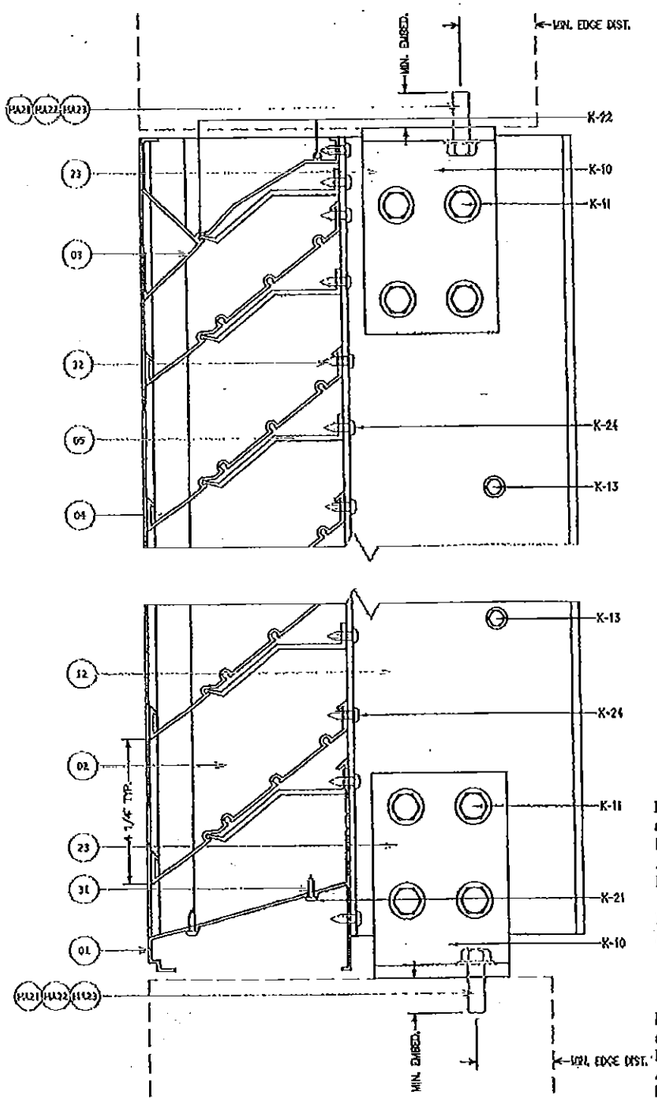

2/5 VERTICAL SECTION @ VERTICAL MULLION

7" CHANNEL, 150" MAXIMUM HEIGHT

RICE ENGINEERING
105 School Creek Trail
Luxemburg, WI 54217
Phone: 920.845.1042
Fax: 920.845.1048
www.rice-inc.com

Florida Firm No: F-01000005061
Certificate of Authorization: #9090
L. David Rice
Registration No: 50923

PRODUCT RENEWED
as complying with the Florida Building Code
Acceptance No 15-1109.03
Expiration Date 02/02/2021
By _____
Miami Dade Product Control

PRODUCT REVISED
as complying with the Florida Building Code
Acceptance No 14-1204.01
Expiration Date 02/02/2016
By _____
Miami Dade Product Control

lunteelindustrialouvers.com
www.industrialouvers.com
Delano, Minnesota
763-972-2981

INDUSTRIAL LOUVERS INC.

653XPDC

6" Deep Drainable Blade Louver

Revisions

No.	By	Description	Date
1	DG	POST ENGINEERING UPDATE	01/14/10
2	DG	ASSEMBLY CLARIFICATION	02/11/10
3	DG	COMPLIANCE OFFICE REQUESTS	02/25/10
4	DG	TRIANGLE LOUVER ADDED	03/08/10
5	DM	COMPLIANCE TO A.T.I. TEST	08/25/10
6	DG	UPDATE TO COMPLY WITH 2010 FBC	08/06/13
7	DG	UPDATE PER COMPLIANCE OFFICE MARKUPS	08/06/13

Date: 10/07/2009
Drawn By: DG
Checked By:
Sheet No. 5 Of 8
Drawing No. DCT

Compliance Office Stamp

PRODUCT REVISED
as complying with the Florida Building Code
Acceptance No 13-0909.09
Expiration Date 02/02/2016
By _____
Miami Dade Product Control

Engineering Stamp

L. DAVID RICE
LICENSE
No. 50923
STATE OF FLORIDA
PROFESSIONAL ENGINEER

NOV 25 2013

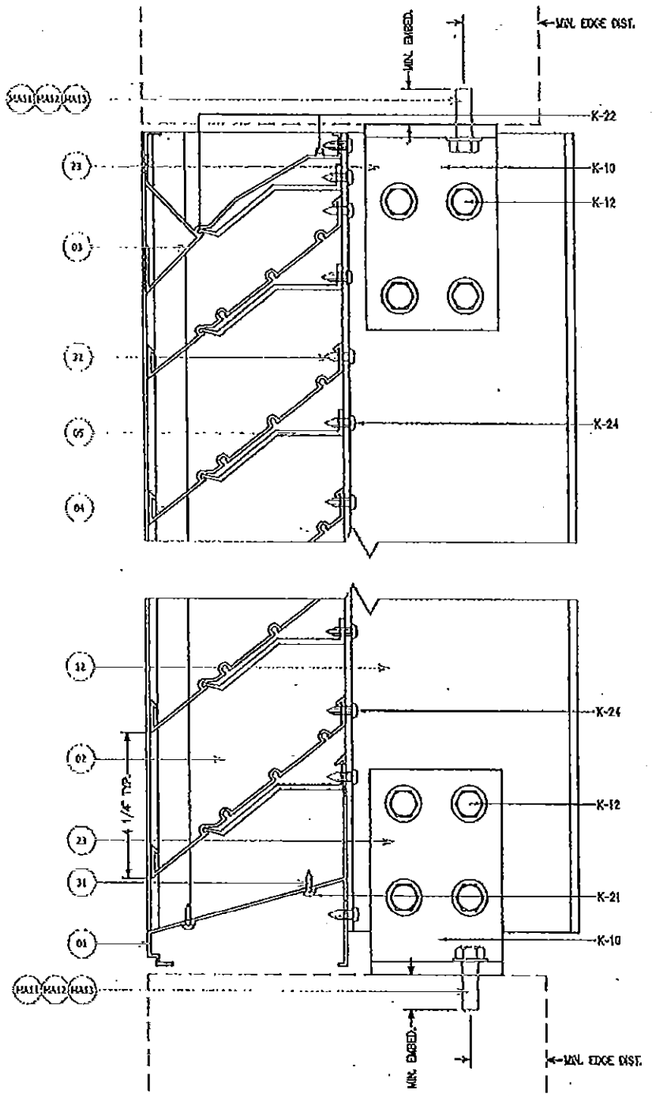

1/6 VERTICAL SECTION @ STIFFENER CHANNEL

7" CHANNEL, 60" MAXIMUM HEIGHT

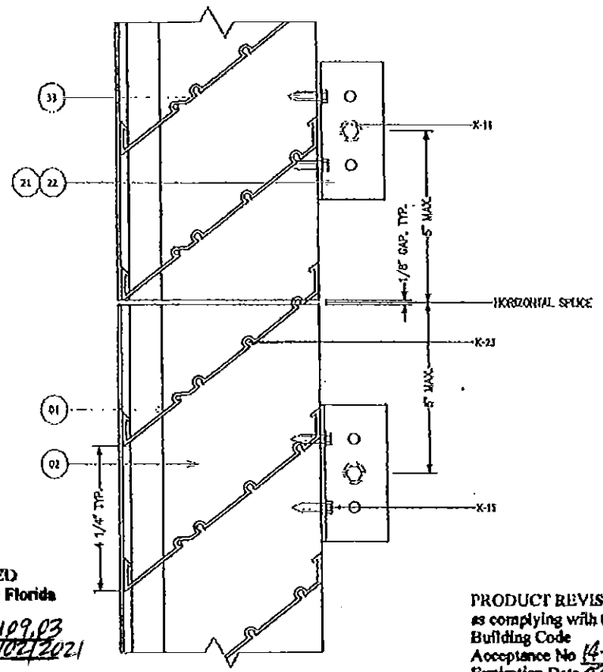

2/6 CROSS SECTION @ HORIZONTAL SPLICE

PRODUCT REVISED
as complying with the Florida Building Code
Acceptance No 15-1109.03
Expiration Date 02/02/2021
By
Miami Dade Product Control

PRODUCT REVISED
as complying with the Florida Building Code
Acceptance No 14-1204.01
Expiration Date 02/02/2016
By
Miami Dade Product Control

RICE ENGINEERING
105 School Creek Trail
Luxemburg, WI 54217
Phone: 920.845.1042
Fax: 920.845.1048
www.dce-inc.com

Florida Firm No: F-01000005051
Certificate of Authorization: #9090
L David Rice
Registration No: 50923

INDUSTRIAL LOUVERS INC.
www.industriallouvers.com
Delano, Minnesota
763-972-2981

653XPDC
6" Deep Drainable Blade Louver

Revisions

No.	By	Description	Date
1	DG	POST ENGINEERING UPDATE	01/14/10
2	DG	ASSEMBLY CLARIFICATION	02/11/10
3	DG	COMPLIANCE OFFICE REQUESTS	02/25/10
4	DG	TRIANGLE LOUVER ADDED	03/08/10
5	DM	COMPLIANCE TO A.L. TEST	06/25/10
6	DG	UPDATE TO COMPLY WITH 2010 FBC	09/04/13
7	DG	UPDATE PER COMPLIANCE OFFICE MARKUPS	09/04/15

Date: 10/07/2009
Drawn By: DG
Checked By: _
Sheet No. 6 Of 8
Drawing No. DCT

Compliance Office Stamp

PRODUCT REVISED
as complying with the Florida Building Code
Acceptance No 13-0109.07
Expiration Date 02/02/2016
By
Miami Dade Product Control

Engineering Stamp

L. DAVID RICE LICENSE No. 50923 STATE OF FLORIDA PROFESSIONAL ENGINEER
NOV 25 2015

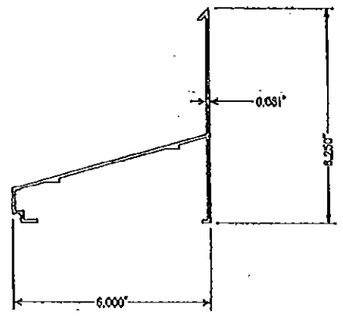

01 LOUVER BOTTOM FRAME

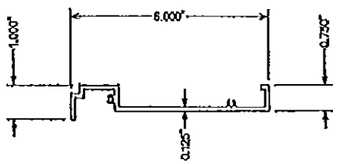

02 LOUVER SIDE FRAME

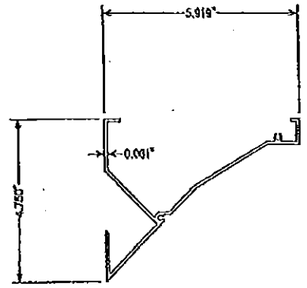

03 LOUVER TOP FRAME

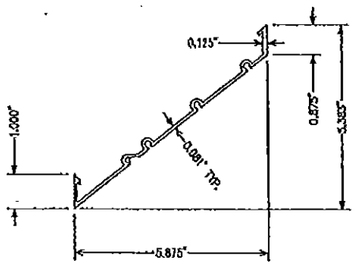

04 LOUVER BLADE

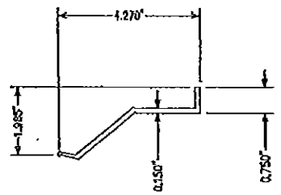

05 BLADE BRACE, 3" LONG

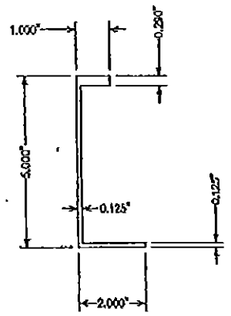

11 1" X 5" X 2" X 1/8" CHANNEL

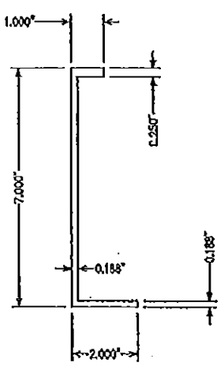

12 1" X 7" X 2" X 3/16" CHANNEL

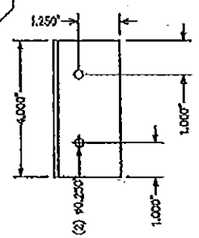

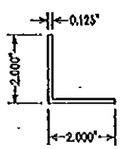

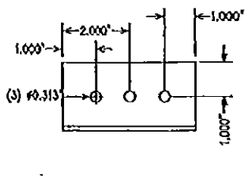

21 4" LONG 2" X 2" X 1/8" CLIP ANGLE

PRODUCT RENEWED
as complying with the Florida
Building Code
Acceptance No 15-1109.03
Expiration Date 02/02/2021
By
Miami Dade Product Control

PRODUCT REVISED
as complying with the Florida
Building Code
Acceptance No 14-1204.01
Expiration Date 02/02/2016
By
Miami Dade Product Control

RICE ENGINEERING
105 School Creek Trail
Luxemburg, WI 54217
Phone 920.845.1042
Fax: 920.845.1048
www.rice-inc.com

Florida Firm No: F-01000005061
Certificate of Authorization: #9090
L David Rice
Registration No: 50923

INDUSTRIAL LOUVERS INC.
Industrial Louvers, Inc.
www.industrialLouvers.com
Delano, Minnesota
763-972-2981

653XPDC
6" Deep Drainable Blade Louver

Revisions

No.	By	Description	Date
1	DG	POST ENGINEERING UPDATE	01/14/10
2	DG	ASSEMBLY CLARIFICATION	02/11/10
3	DG	COMPLIANCE OFFICE REQUESTS	02/25/10
4	DG	TRIANGLE LOUVER ADDED	03/08/10
5	DM	COMPLIANCE TO A.T.I. TEST	08/25/10
6	DG	UPDATE TO COMPLY WITH 2010 FBC	08/04/13
7	DG	UPDATE PER COMPLIANCE OFFICE MARKUPS	08/04/13

Date: 10/07/2009
Drawn By: DG
Checked By:
Sheet No. 7 Of 8
Drawing No. DCT

Compliance Office Stamp

PRODUCT REVISED
as complying with the Florida
Building Code
Acceptance No 13-0909.09
Expiration Date 02/02/2016
By
Miami Dade Product Control

Engineering Stamp

L. DAVID RICE
LICENSE
No. 50923
STATE OF FLORIDA
PROFESSIONAL ENGINEER

NOV 25 2013

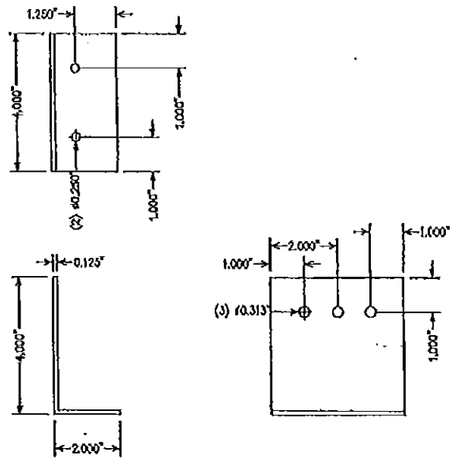

22 4" LONG 2" X 4" X 1/8" CLIP ANGLE

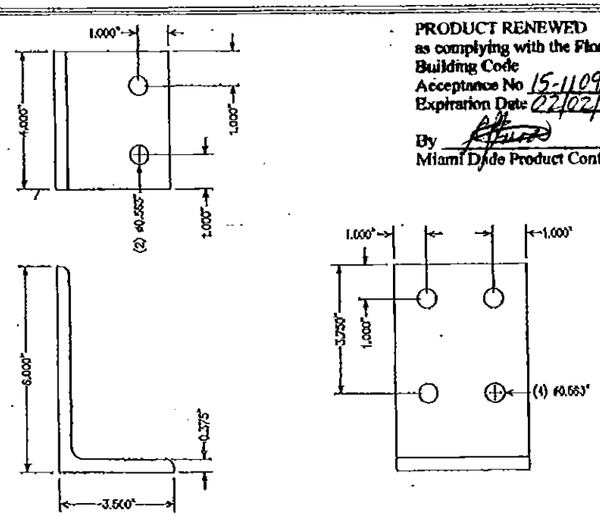

23 4" LONG 3 1/2" X 6" X 3/8" CLIP ANGLE

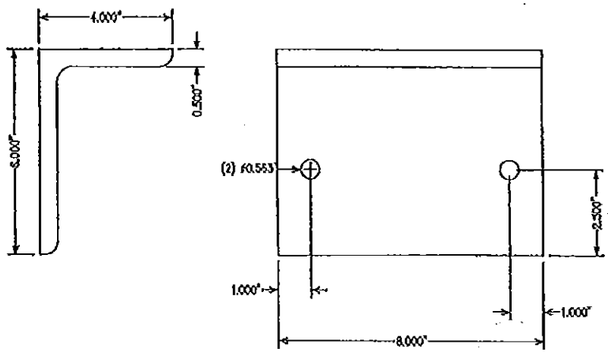

24 8" LONG 4" X 6" X 1/2" SHELF ANGLE

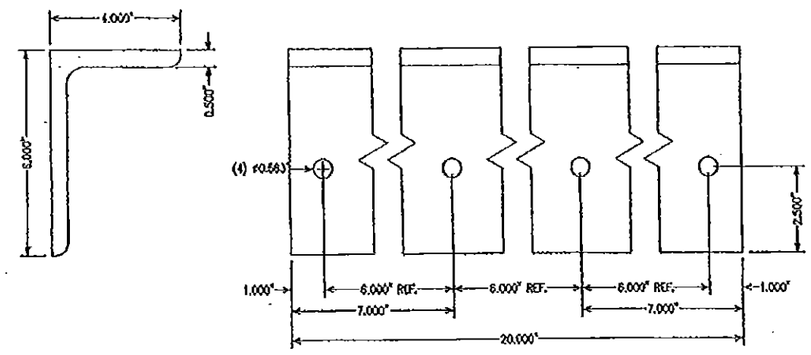

25 20" LONG 4" X 6" X 1/2" SHELF ANGLE

31 #8 X 5/8" SD PH SM SCREW

32 #12 X 3/4" SD PH SM SCREW

33 #12 X 1" HWH SM SCREW

34 #12 X 1 1/2" SD PH SM SCREW

35 1/4"-20 X 1" HH BOLT W/ WASHERS AND NUT

36 1/2"-13 X 2" HH BOLT W/ WASHERS AND NUT

37 1/2" X 2 1/2" HH BOLT W/ WASHERS AND NUT

PRODUCT RENEWED
as complying with the Florida Building Code
Acceptance No 15-1109.03
Expiration Date 02/02/2021
By
Miami Dade Product Control

PRODUCT REVISED
as complying with the Florida Building Code
Acceptance No 14-1204.01
Expiration Date 02/02/2016
By
Miami Dade Product Control

RICE ENGINEERING
105 School Creek Trail
Luxemburg, WI 54217
Phone: 920.845.1042
Fax: 920.845.1048
www.rice-inc.com

Florida Firm No: F-01000005061
Certificate of Authorization: #9090
L. David Rice
Registration No: 50923

INDUSTRIAL LOUVERS INC.
Lic#ilouvers@louvers.com
www.industriallouvers.com
Delano, Minnesota
763-972-2081

653XPDC
6" Deep Drainable Blade Louver

Revisions

No.	By	Description	Date
1	DG	POST ENGINEERING UPDATE	01/14/10
2	DG	ASSEMBLY CLARIFICATION	02/11/10
3	DG	COMPLIANCE OFFICE REQUESTS	02/25/10
4	DG	TRANSE/LOUVER ADDED	03/02/10
5	DM	COMPLIANCE TO ATI TEST	08/25/10
6	DG	UPDATE TO COMPLY WITH 2010 FBC	09/06/13
7	DG	UPDATE PER COMPLIANCE OFFICE MARKUPS	09/06/13

Date: 10/07/2009
Drawn By: DG
Checked By:
Sheet No. 8 Of 8
Drawing No. DCT

Compliance Office Stamp

PRODUCT REVISED
as complying with the Florida Building Code
Acceptance No 13-0709.09
Expiration Date 02/02/2016
By
Miami Dade Product Control

Engineering Stamp

L. DAVID RICE
LICENSED
No. 50923
STATE OF FLORIDA
PROFESSIONAL ENGINEER

NOV 25 2015