MIAMI-DADE COUNTY
DEPARTMENT OF REGULATORY AND ECONOMIC RESOURCES (RER)
BOARD AND CODE ADMINISTRATION DIVISION

MIAMI-DADE COUNTY
PRODUCT CONTROL SECTION
11805 SW 26 Street, Room 208
Miami, Florida 33175-2474
www.miamidade.gov/economy

NOTICE OF ACCEPTANCE (NOA)

Super Sky Products Enterprises, LLC
10301 North Enterprise Drive
Mequon, Wisconsin 53092

SCOPE:
This NOA is being issued under the applicable rules and regulations governing the use of construction materials. The documentation submitted has been reviewed and accepted by Miami-Dade County RER-Product Control Section to be used in Miami Dade County and other areas where allowed by the Authority Having Jurisdiction (AHJ).

This NOA shall not be valid after the expiration date stated below. The Miami-Dade County Product Control Section (In Miami Dade County) and/or the AHJ (in areas other than Miami Dade County) reserve the right to have this product or material tested for quality assurance purposes. If this product or material fails to perform in the accepted manner, the manufacturer will incur the expense of such testing and the AHJ may immediately revoke, modify, or suspend the use of such product or material within their jurisdiction. RER reserves the right to revoke this acceptance, if it is determined by Miami-Dade County Product Control Section that this product or material fails to meet the requirements of the applicable building code.

This product is approved as described herein, and has been designed to comply with the High Velocity Hurricane Zone of the Florida Building Code.

DESCRIPTION: Standard Tubular Aluminum Skylight System with Insulated Glass – L.M.I.

APPROVAL DOCUMENT: Drawing No. 2002-0246, titled "Super Sky's Standard Tubular Skylight Glazing System", sheets A1 through A4 of 4 and B1 through B6 of 6, prepared by David S. Barron, P.E., signed and sealed by David S. Barron, P.E on November 15, 2005, bearing the Miami-Dade County Product Control Revision stamp with the Notice of Acceptance number and the expiration date by the Miami-Dade County Product Control Section.

MISSILE IMPACT RATING: Large and Small Missile Impact Resistant

LABELING: Each unit shall bear a permanent label with the manufacturer's name or logo, city, state, model/series and the following statement: "Miami-Dade County Product Control Approved", unless otherwise noted herein.

RENEWAL of this NOA shall be considered after a renewal application has been filed and there has been no change in the applicable building code negatively affecting the performance of this product.

TERMINATION of this NOA will occur after the expiration date or if there has been a revision or change in the materials, use, and/or manufacture of the product or process. Misuse of this NOA as an endorsement of any product, for sales, advertising or any other purposes shall automatically terminate this NOA. Failure to comply with any section of this NOA shall be cause for termination and removal of NOA.

ADVERTISEMENT: The NOA number preceded by the words Miami-Dade County, Florida, and followed by the expiration date may be displayed in advertising literature. If any portion of the NOA is displayed, then it shall be done in its entirety.

INSPECTION: A copy of this entire NOA shall be provided to the user by the manufacturer or its distributors and shall be available for inspection at the job site at the request of the Building Official.

This NOA **revises NOA # 12-1023.06** and consists of this page 1, evidence submitted pages E-1 & E-2 as well as approval document mentioned above.
The submitted documentation was reviewed by **Helmy A. Makar, P.E., M.S.**

MIAMI-DADE COUNTY APPROVED

Helmy A. Makar
05/12/2016

NOA No. 15-1124.07
Expiration Date: 11/18/2017
Approval Date: 05/12/2016

Super Sky Products Enterprises, LLC

NOTICE OF ACCEPTANCE: EVIDENCE SUBMITTED

A. DRAWINGS

1. *Drawing No. 2002-0246, titled "Super Sky's Standard Tubular Skylight Glazing System", sheets A1 through A4 of 4 and B1 through B6 of 6, prepared by David S. Barron, P.E., signed and sealed by David S. Barron, P.E on November 15, 2005.*

B. TESTS

1. *Test report on Large Missile Impact Test, Cyclic Load Test and Uniform Static air Pressure Test on Super Sky's Skylight Systems, prepared by Hurricane Test Laboratory, Inc., Report No. 0161-0207-99, dated 02/16/99, signed and sealed by Timothy S. Marshall, P.E.* ***(Submitted under NOA 99-0610.02.)***
2. *Test report on Large Missile Impact Test, Cyclic Load Test and Uniform Static air Pressure Test on Super Sky's Skylight Systems, prepared by Hurricane Test Laboratory, Inc., Report Nos. 0161-0409-05 & 0161-1023-04, dated September 13, 2005, signed and sealed by Vinu J. Abraham, P.E.* ***(Submitted under NOA 05-1208.05.)***

C. CALCULATIONS

1. *Calculation titled "Super Sky Products, Inc. Mock-up-Dade County Product Approval TAS-201, TAS-202, TAS-203, Large Missile Test", dated November 11, 2005, sheets 1 through 21 of 21, prepared by David S. Barron, P.E., signed and sealed by David S. Barron, P.E.* ***(Submitted under NOA 05-1208.05.)***

D. QUALITY ASSURANCE

1. *By Miami-Dade County Department of Regulatory and Economic Resources.*

E. MATERIAL CERTIFICATIONS

1. *Mill Certified Test Report issued by Viracon, dated 03/10/99, with the glass strength analysis by Jeffrey D. Granato.* ***(Submitted under NOA 99-0610.02.)***
2. *The Die Drawing Numbers D1 through D9 of 9, by Super Sky Products, Inc.* ***(Submitted under NOA 99-0610.02.)***

F. OTHERS

1. *Letter of Compliance with the Florida Building Code, 2010 Edition, issued by Mr. David S. Barron, P.E., dated September 27, 2012, signed and sealed by Mr. David S. Barron, P.E.*
2. *Letter of Compliance with the Florida Building Code, 2010 Edition, issued by Mr. David S. Barron, P.E., dated February 10, 2012, signed and sealed by Mr. David S. Barron, P.E.* ***(Submitted under NOA 11-0811.04.)***

Helmy A. Makar, P.E., M.S.
Product Control Section Supervisor
NOA No. 15-1124.07
Expiration Date: 11/18/2017
Approval Date: 05/12/2016

NOTICE OF ACCEPTANCE: EVIDENCE SUBMITTED

2. NEW EVIDENCE SUBMITTED

A. DRAWINGS

1. None.

B. TESTS

1. None.

C. CALCULATIONS

1. None.

D. QUALITY ASSURANCE

1. By Miami-Dade County Department of Regulatory and Economic Resources.

E. MATERIAL CERTIFICATIONS

1. None.

F. OTHERS

3. Letter of Compliance with the Florida Building Code, 2014 Edition, issued by Mr. David S. Barron, P.E., dated November 05, 2015, signed and sealed by Mr. David S. Barron, P.E.

Helmy A. Makar, P.E., M.S.
Product Control Section Supervisor
NOA No. 15-1124.07
Expiration Date: 11/18/2017
Approval Date: 05/12/2016

SUPER SKY'S STANDARD TUBULAR SKYLIGHT SYSTEM

1) SYSTEM DESCRIPTION: SUPER SKY'S STANDARD TUBULAR SKYLIGHT GLAZING SYSTEM CONSISTS OF AN EXTRUDED ALUMINUM STRUCTURAL FRAME (6005-T5), CUSTOM ENGINEERED TO SUIT A PARTICULAR PROJECT. THE EXTRUDED FRAME IS CONNECTED TOGETHER USING ALUMINUM CHANNEL CLIPS, ANCHOR PLATES, AND GUSSET PLATES, AS SHOWN ON DRAWINGS A1-A4. THE GLASS IS ATTACHED TO THE FRAME USING ALUMINUM RETAINERS (6005-T5), AND ¼"-20 STAINLESS STEEL TORX HEAD SCREWS 6" O.C. THE SCREWS ENGAGE THE SERRATIONS IN THE ALUMINUM EXTRUSIONS BELOW. EPDM GASKETS ARE USED ON THE INTERIOR (⅛" X ½") AND EXTERIOR (¼" X ⅜") TO CUSHION THE GLASS, AND A FULL SILICONE WEATHER SEAL AND SNAP-ON CAPS ARE APPLIED TO PREVENT AIR AND WATER INFILTRATION.

2) SKYLIGHT TYPES: SINCE ALMOST ALL SKYLIGHTS BUILT USING SUPER SKY'S STANDARD TUBULAR GLAZING SYSTEM ARE CUSTOM DESIGNED FOR A PARTICULAR BUILDING, VIRTUALLY NONE OF THEM ARE EXACTLY THE SAME. IN RECOGNITION OF THIS FACT, THE TEST SPECIMENS AS SHOWN ON SHEETS A1-A4 WERE DEVELOPED SO AS TO TEST THE FOUR STANDARD DETAILS USED ON MOST SKYLIGHT PROJECTS (CURB, RAFTER, CROSSBAR, AND KNEE). THE DESIGN PRESSURE, GLASS TYPE, AND GLASS SIZES WERE ALSO SELECTED TO SUIT THE MOST POSSIBLE SKYLIGHT PROJECTS.

EXAMPLES OF THESE SKYLIGHTS ARE SHOWN BELOW.

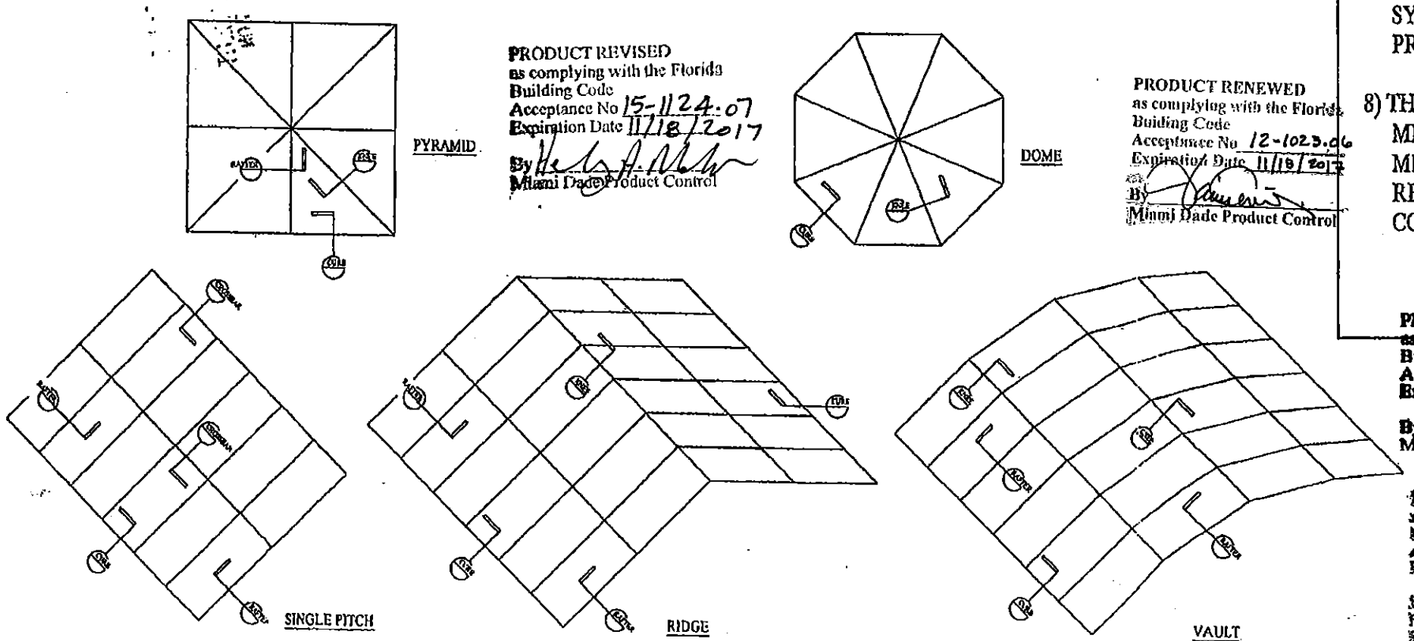

PRODUCT REVISED
as complying with the Florida Building Code
Acceptance No 15-1124.07
Expiration Date 11/18/2017
By
Miami Dade Product Control

PRODUCT RENEWED
as complying with the Florida Building Code
Acceptance No 12-1023.06
Expiration Date 11/18/2017
By
Miami Dade Product Control

SUPER SKY'S STANDARD TUBULAR SKYLIGHT GLAZING SYSTEM

PRODUCT APPROVAL TESTING PER TAS-201, TAS-202, TAS-203

STANDARD DETAILS TESTED:

1. CURB (SEE DETAIL 1/A3)
2. RAFTER (SEE DETAIL 3/A3)
3. CROSSBAR (SEE DETAIL 1/A3)
4. KNEE [HIP] (SEE DETAIL 2/A3)

PLEASE SEE DRAWINGS A1-A4 FOR COMPLETE SPECIFICATIONS OF THE MOCK-UPS TESTED.

GENERAL NOTES:

1) THIS SYSTEM IS APPROVED FOR: DESIGN PRESSURES UP TO +80/-90PSF.

2) GLASS TYPE TESTED: 1 5/16" IGU CONSISTING OF:
¼" CLEAR HEAT STRENGTHENED OUTER LITE,
½" AIR SPACE,
9/16" CLEAR LAMINATED INNER LITE, CONSISTING OF:
¼" CLEAR HEAT STRENGTHENED GLASS,
.077" VS-02 PVB INTERLAYER BY SOLUTIA
¼" CLEAR HEAT STRENGTHENED GLASS.

3) LARGE MISSILE IMPACT TESTED. THIS GLASS PRODUCT IS APPROVED FOR USE FROM GRADE UP TO 30', OR HIGHER IF DESIRED.

4) APPROVED UP TO A MAXIMUM LITE SIZE OF 30 SQ. FT.

5) THE ALUMINUM EXTRUSIONS TESTED WERE SIZED PER STRUCTURAL CALCULATIONS TO SUIT THE SPANS AND DESIGN PRESSURE TESTED.

6) ALUMINUM CONTACTING MATERIALS NOT CONSIDERED COMPATIBLE SHALL BE PROTECTED PER SECTION 2003.8.4.2 OF THE FLORIDA BUILDING CODE.

7) THIS APPROVAL IS LIMITED TO THE MAXIMUM AREA OF THE 1 5/16" INSULATED GLASS, THE FULLY ASSEMBLED GLAZING DETAILS SYSTEM TO THE SUPPORTING RAFTERS AND THE MAXIMUM DESIGN PRESSURE SHOWN ON THESE DRAWINGS.

8) THE STRUCTURAL ADEQUACY OF THE SUPPORTING STRUCTURAL MEMBERS, (CURBS, RAFTERS, PURLINS, AND ALL OTHER FRAMING MEMBERS) IS NOT PART OF THIS APPROVAL AND IT SHALL BE REVIEWED BY THE STRUCTURAL PLANS EXAMINER OF THE CORRESPONDING BUILDING DEPARTMENT.

PRODUCT REVISED
as complying with the Florida Building Code
Acceptance No 11-0811.04
Expiration Date 11/18/2012
By
Miami Dade Product Control

PRODUCT RENEWED
as complying with the Florida Building Code
Acceptance No 07-0810.02
Expiration Date 11/18/2012
By
Miami Dade Product Control Division

DADE COUNTY USE

PRODUCT REVISED
as complying with the Florida Building Code
Acceptance No 05-1208.05
Expiration Date 11/18/2007
By
Miami Dade Product Control Division

ENGINEER STAMP

David S. Barron
11-15-05

DAVID S. BARRON
21 DARTMOUTH DRIVE
GREENSBURG, PA 15601
LISCENCE #36374

27520

20020246A_1-7-05_-D1

SUPER SKY

SUPER SKY PRODUCTS ENTERPRISES, LLC
[illegible] ENTERPRISE DR.
MEQUON, WISCONSIN [illegible]
[illegible]

CURRENT NOA
02-1009.05
LARGE MISSILE

REVISION

2 NEW GLASS TYPE 01/07/05 JB
REVISION TO CURRENT NOA 02-1009.05
EXP. 12-24-07

PROJECT
MOCK-UP - DADE COUNTY PRODUCT APPROVAL
DADE COUNTY, FL

ENGINEER
DAVID S. BARRON
MEQUON, WI

TEST LABORATORY
HURRICANE TEST LAB
RIVIERA BEACH, FL

DRAWN BY JB	DATE 01/07/05
SCALE ---	APPROVAL 1 (DP)
DRAWING 2002-0246	

A1
OF 4

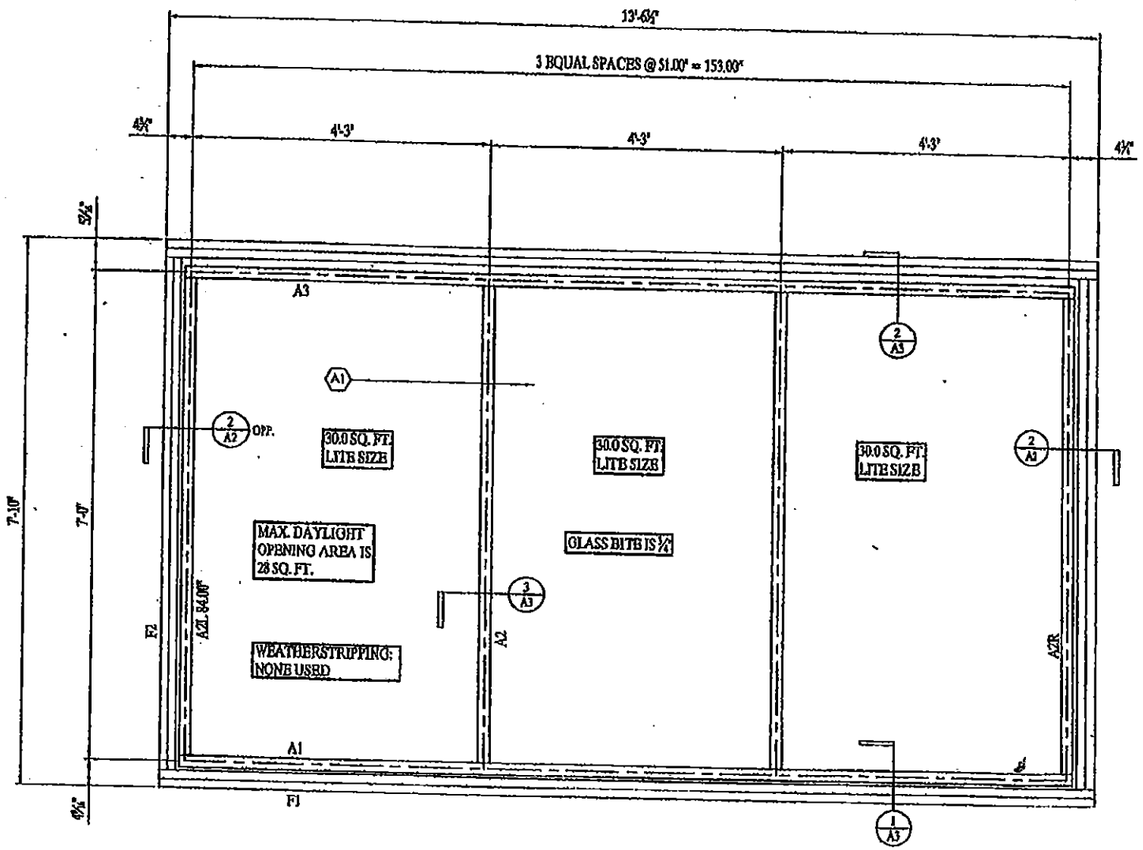

1/A2 ELEVATION (1 REQ'D)
SCALE: 1" = 1'-0"

PRODUCT REVISED
as complying with the Florida
Building Code
Acceptance No 15-1124.07
Expiration Date 11/18/2017
By
Miami Dade Product Control

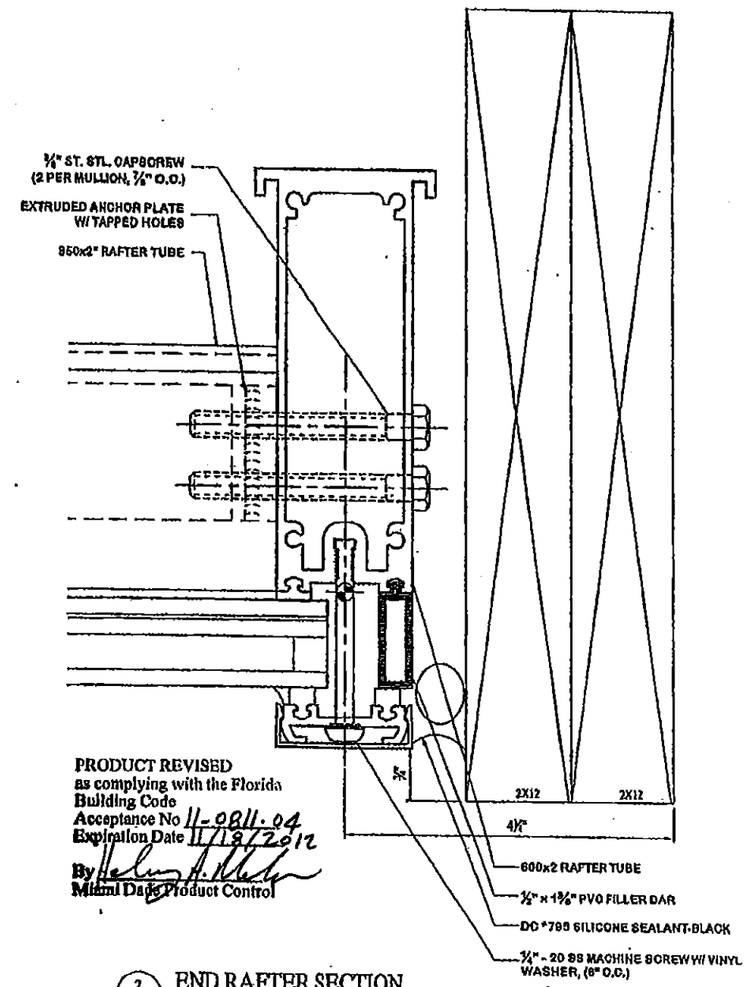

PRODUCT REVISED
as complying with the Florida
Building Code
Acceptance No 11-0811.04
Expiration Date 11/18/2012
By
Miami Dade Product Control

2/A2 END RAFTER SECTION
SCALE: FULL

PRODUCT RENEWED
as complying with the Florida
Building Code
Acceptance No 12-1023.06
Expiration Date 11/18/2017
By
Miami Dade Product Control

PRODUCT RENEWED
as complying with the Florida
Building Code
Acceptance No 07-0810.02
Expiration Date 11/18/2012
By
Miami Dade Product Control
Division

DADE COUNTY USE	ENGINEER STAMP
PRODUCT REVISED as complying with the Florida Building Code Acceptance No 05-1208.05 Expiration Date 11/18/2007 By Miami Dade Product Control Division	David S Barron 11-15-05

DAVID S. BARRON
21 DARTMOUTH DRIVE
GREENSBURG, PA 15601
LISCENCE #36374

20020246A_1-7-05_-D1.dwg

SUPER SKY PRODUCTS ENTERPRISES, LLC
9001 N. ENTERPRISE DR.
MEQUON, WISCONSIN 53092
262-242-2870

REVISION

PROJECT
MOCK-UP - DADE COUNTY PRODUCT APPROVAL
DADE COUNTY, FL

ENGINEER
DAVID S. BARRON
MEQUON, WI

TEST LABORATORY
RIVIERA BEACH, FL

TITLE
ELEVATION
END RAFTER SECTION

DRAWN BY JB
DATE 01/07/05
SCALE AS NOTED
REVISION 1 (DP)
JOB NO. 2002-0246

A2
OF 4

SHOP NOTE

COUNTERBORE WOOD SO BOLT HEADS DON'T STICK OUT

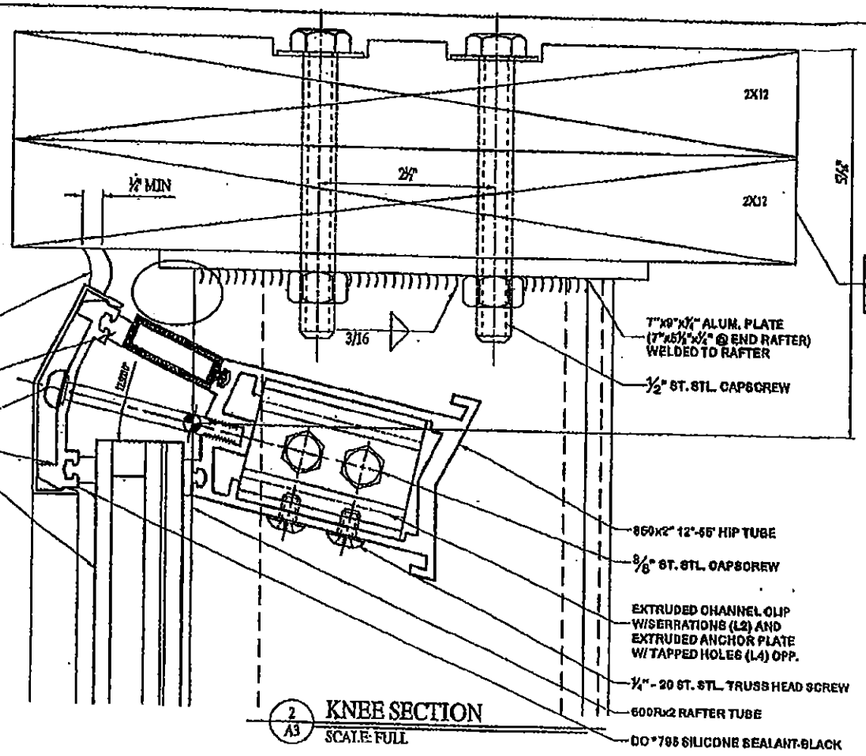

2 A3 KNEE SECTION
SCALE: FULL

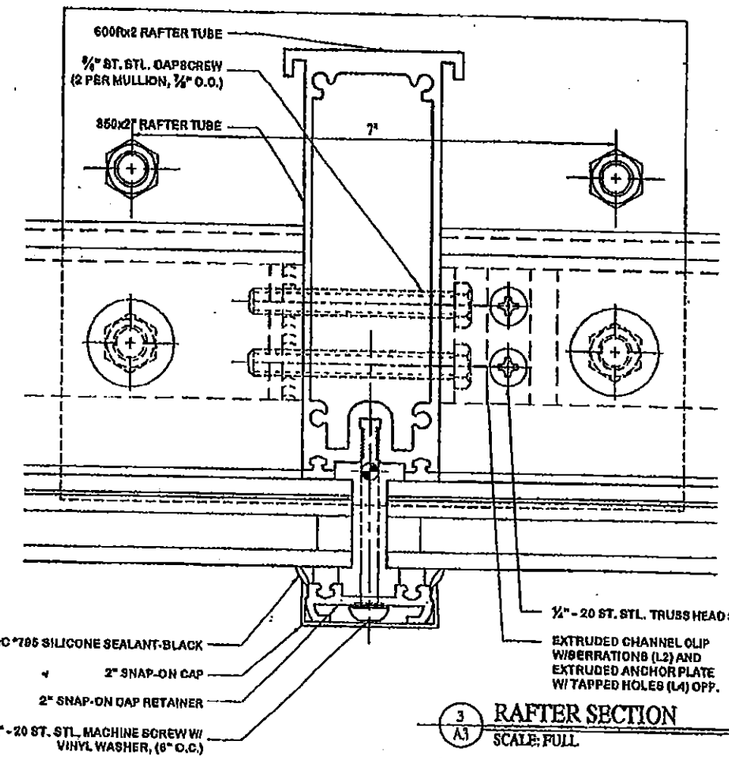

3 A3 RAFTER SECTION
SCALE: FULL

PRODUCT REVISED
as complying with the Florida Building Code
Acceptance No 15-1124.07
Expiration Date 11/18/2017
By Helen A. Melon
Miami Dade Product Control

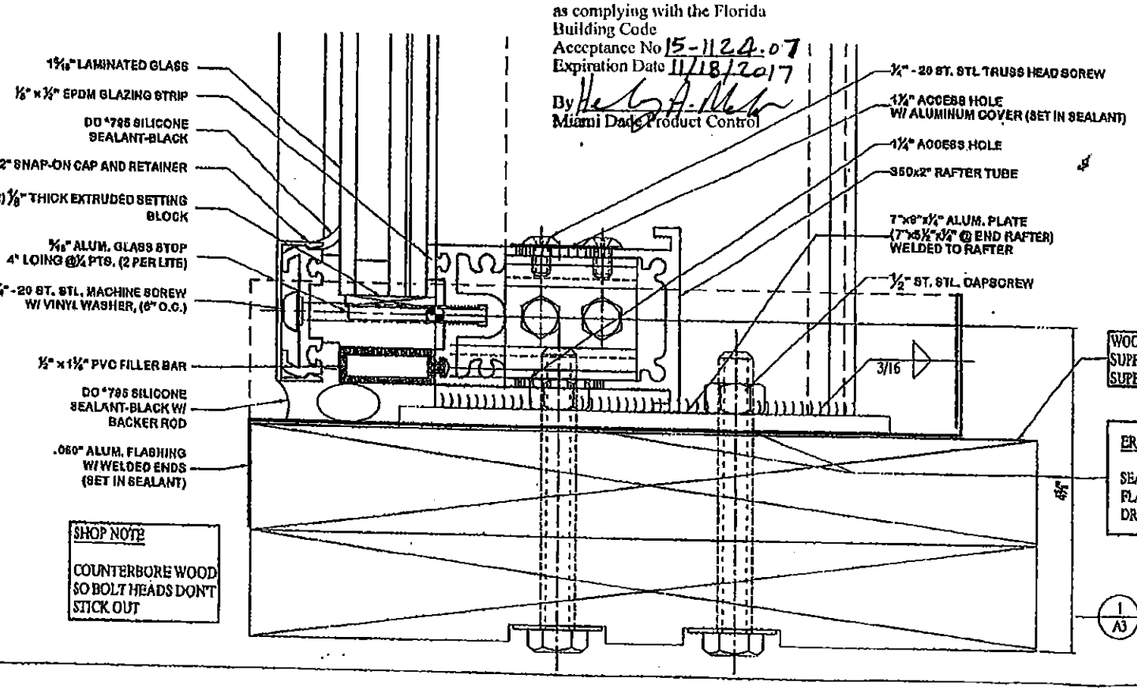

SHOP NOTE

COUNTERBORE WOOD SO BOLT HEADS DON'T STICK OUT

1 A3 CURB/SILL SECTION
SCALE: FULL

PRODUCT RENEWED
as complying with the Florida Building Code
Acceptance No 12-1023.06
Expiration Date 11/18/2017
By
Miami Dade Product Control

PRODUCT RENEWED
as complying with the Florida Building Code
Acceptance No 07-0810.02
Expiration Date 11/18/2012
By Helen A. Melon
Miami Dade Product Control Division

ERECTION NOTE: ⚠

SEAL BOLT PENETRATIONS THROUGH FLASHING TO PREVENT ANY WATER FROM DRIPPING OUT OF SILL FLASHING.

PRODUCT REVISED
as complying with the Florida Building Code
Acceptance No 11-0811.04
Expiration Date 11/18/2012
By Helen A. Melon
Miami Dade Product Control

DADE COUNTY USE

PRODUCT REVISED
as complying with the Florida Building Code
Acceptance No 05-1208.05
Expiration Date 11/18/2007
By Helen A. Melon
Miami Dade Product Control Division

ENGINEER STAMP

David S. Barron
11-15-05

DAVID S. BARRON
21 DARTMOUTH DRIVE
GREENSBURG, PA 15601
LISCENCE #36374

SUPER SKY PRODUCTS ENTERPRISES, LLC
1621 N. ENTERPRISE DR.
MEQUON, WISCONSIN 53092
262-242-2000

REVISION

PROJECT
MOCK-UP - DADE COUNTY PRODUCT APPROVAL

DADE COUNTY, FL

ENGINEER
DAVID S. BARRON

MEQUON, WI

TEST LABORATORY

RIVIERA BEACH, FL

TITLE
KNEE, SILL AND RAFTER SECTIONS

DRAWN BY JB	DATE 06/29/04
SCALE FULL	REVISION 1 (DP)
DRAWING 2002-0246	

20020246A_1-7-05_-D1.dwg

A3
OF 4

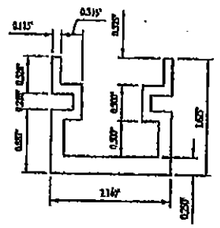

SUMMARY OF PROPERTIES

CENTRE OF MASS [.67,0.67416,0]
SURFACE AREA 1.0154 INCH**2
MOMENT ABOUT X AXIS 0.229661 INCH**4
MOMENT ABOUT Y AXIS 0.405863 INCH**4
POLAR MOMENT 0.635529 INCH**4
PRINCIPAL AXES ROTATION ANGLE = 0°-0'
RADII OF GYRATION:
POLAR 0.790686 INCH
X AXIS 0.47486 INCH
Y AXIS 0.632072 INCH

WEIGHT PER LINEAR FOOT 1.191528 LBS
ALUMINUM ALLOT 6005-T5

CHANNEL CLIP
SCALE: FULL

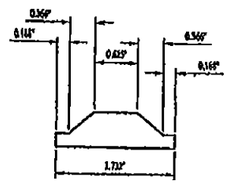

SUMMARY OF PROPERTIES

CENTRE OF MASS [0.866,0.206769,0]
SURFACE AREA 0.866642 INCH**2
MOMENT ABOUT X AXIS 0.0116681 INCH**4
MOMENT ABOUT Y AXIS 0.110199 INCH**4
POLAR MOMENT 0.122066 INCH**4
PRINCIPAL AXES ROTATION ANGLE = 0°-0'
RADII OF GYRATION:
POLAR 0.459216 INCH
X AXIS 0.186642 INCH
Y AXIS 0.41687 INCH

WEIGHT PER LINEAR FOOT 0.748701 LBS
ALUMINUM ALLOT 6005-T5

ANCHOR PLATE
SCALE: FULL

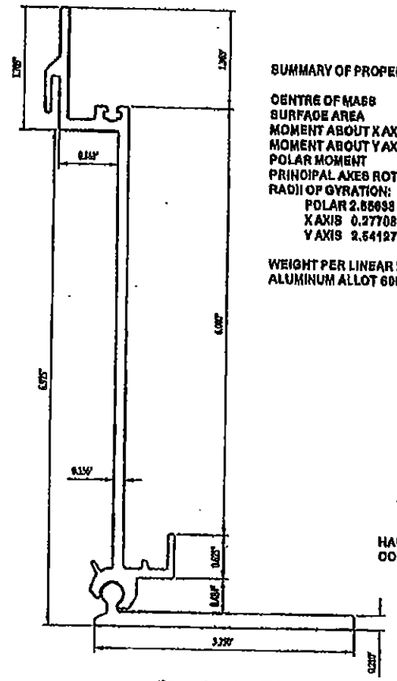

SUMMARY OF PROPERTIES

CENTRE OF MASS [-1.35998,0.607898,0]
SURFACE AREA 1.67698 INCH**2
MOMENT ABOUT X AXIS 0.129744 INCH**4
MOMENT ABOUT Y AXIS 10.8294 INCH**4
POLAR MOMENT 10.9581 INCH**4
PRINCIPAL AXES ROTATION ANGLE = 65°-23'
RADII OF GYRATION:
POLAR 2.85698 INCH
X AXIS 0.277084 INCH
Y AXIS 2.54127 INCH

WEIGHT PER LINEAR FOOT 1.961950 LBS
ALUMINUM ALLOT 6005-T5

600 VARIABLE CURB
SCALE: FULL

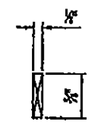

1/8" x 5/8" x 4" LONG SILICONE SETTING BLOCK
SCALE: FULL

HARDNESS.....(SHORE A) 50 + 5 DUROMETER
COLOR.....BLACK

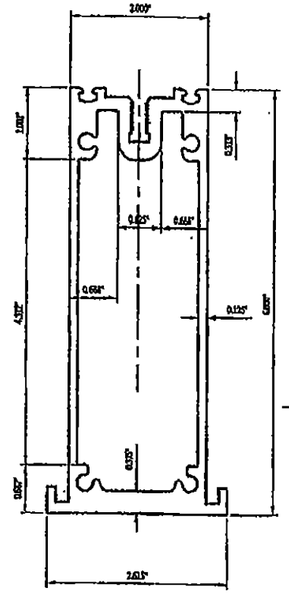

SUMMARY OF PROPERTIES

CENTRE OF MASS [1.81252,0.04699,0]
SURFACE AREA 3.25287 INCH**2
MOMENT ABOUT X AXIS 1.92402 INCH**4
MOMENT ABOUT Y AXIS 16.6659 INCH**4
POLAR MOMENT 18.5899 INCH**4
PRINCIPAL AXES ROTATION ANGLE = 90°-0'
RADII OF GYRATION:
POLAR 2.40871 INCH
X AXIS 0.781089 INCH
Y AXIS 2.27867 INCH

WEIGHT PER LINEAR FOOT 3.005278 LBS
ALUMINUM ALLOT 6005-T5

600 RAFTER TUBE
SCALE: FULL

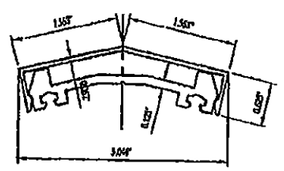

HIP CAP & RETAINER
SCALE: FULL

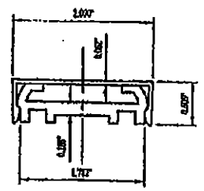

RAFTER CAP & RETAINER
SCALE: FULL

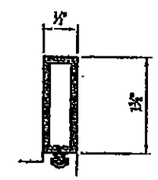

1/2" x 1 3/8" RIGID PVC FILLER BAR
SCALE: FULL

RIGID PVC 1820 W/ .095" MIN WALL

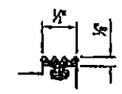

1/8" x 1/2" EPDM GLAZING STRIP
SCALE: FULL

HARDNESS.....(SHORE A) 50 + 5 DUROMETER
TENSILE STRENGTH.....800 PSI (MIN)
ELONGATION.....300 % (MIN)
TEAR; DIE B, PSI.....65 (MIN)
COLOR.....BLACK

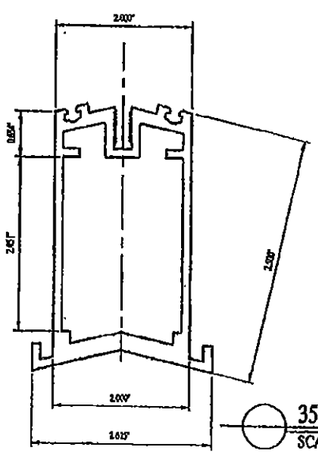

SUMMARY OF PROPERTIES

CENTRE OF MASS [1.31244,1.80268,0]
AREA 2.07765 INCH**2
MOMENT ABOUT X AXIS 1.28674 INCH**4
MOMENT ABOUT Y AXIS 3.64659 INCH**4
PRINCIPAL AXES ROTATION ANGLE = 90°-0'
RADII OF GYRATION:
X AXIS 3.85895 INCH
Y AXIS 2.78665 INCH

WEIGHT PER LINEAR FOOT 2.43103 LBS
ALUMINUM ALLOT 6005-T5

350 HIP TUBE
SCALE: FULL

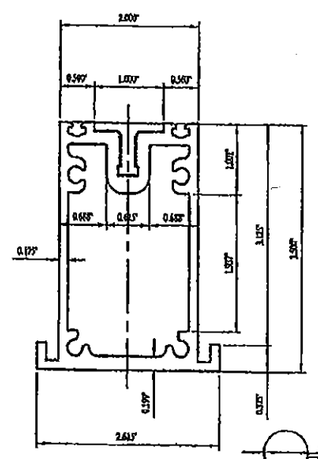

SUMMARY OF PROPERTIES

CENTRE OF MASS [1.81246,1.7169,0]
SURFACE AREA 2.12845 INCH**2
MOMENT ABOUT X AXIS 1.2925 INCH**4
MOMENT ABOUT Y AXIS 3.52933 INCH**4
POLAR MOMENT 4.82164 INCH**4
PRINCIPAL AXES ROTATION ANGLE = -90°-0'
RADII OF GYRATION:
POLAR 1.50591 INCH
X AXIS 0.780163 INCH
Y AXIS 1.28922 INCH

WEIGHT PER LINEAR FOOT 2.484418 LBS
ALUMINUM ALLOT 6005-T5

350 RAFTER TUBE
SCALE: FULL

PRODUCT REVISED
as complying with the Florida
Building Code
Acceptance No 15-1124.07
Expiration Date 11/18/2017
By
Miami Dade Product Control

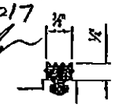

1/4" x 3/8" EPDM GLAZING STRIP
SCALE: FULL

HARDNESS.....(SHORE A) 50 + 5 DUROMETER
TENSILE STRENGTH.....800 PSI (MIN)
ELONGATION.....300 % (MIN)
TEAR; DIE B, PSI.....65 (MIN)
COLOR.....BLACK

SUPER SKY PRODUCTS ENTERPRISES, LLC
1000 N. ENTERPRISE DR.
MEQUON, WISCONSIN 53097
262-242-0200

REVISION

PRODUCT RENEWED
as complying with the Florida
Building Code
Acceptance No 12-1023.06
Expiration Date 11/18/2017
By
Miami Dade Product Control

PRODUCT REVISED
as complying with the Florida
Building Code
Acceptance No 11-0811.04
Expiration Date 11/18/2012
By
Miami Dade Product Control

PRODUCT RENEWED
as complying with the Florida
Building Code
Acceptance No 07-0810.02
Expiration Date 11/18/2012
By
Miami Dade Product Control
Division

PROJECT
MOCK-UP - DADE COUNTY PRODUCT APPROVAL
DADE COUNTY, FL

ENGINEER
DAVID S. BARRON
MEQUON, WI

TEST LABORATORY
RIVIERA BEACH, FL

TITLE
EXTRUSIONS

DADE COUNTY USE

PRODUCT REVISED
as complying with the Florida
Building Code
Acceptance No 05-1208.05
Expiration Date 11/18/2007
By
Miami Dade Product Control
Division

ENGINEER STAMP

David S Barron
11-15-05

DRAWN JB DATE 06/29/04
SCALE FULL SHEET 1 (DP)
JOB NO. 2002-0246

DAVID S. BARRON
21 DARTMOUTH DRIVE
GREENSBURG, PA 15601
LICENCE #36374

DOCUMENT 20020246A_1-7-05_-D1.dwg

A4 OF 4

SUPER SKY'S STANDARD TUBULAR SKYLIGHT SYSTEM

1) SYSTEM DESCRIPTION: SUPER SKY'S STANDARD TUBULAR SKYLIGHT GLAZING SYSTEM CONSISTS OF AN EXTRUDED ALUMINUM STRUCTURAL FRAME (6005-T5), CUSTOM ENGINEERED TO SUIT A PARTICULAR PROJECT. THE EXTRUDED FRAME IS CONNECTED TOGETHER USING ALUMINUM CHANNEL CLIPS, ANCHOR PLATES, AND GUSSET PLATES, AS SHOWN ON DRAWINGS B1-B5. THE GLASS IS ATTACHED TO THE FRAME USING ALUMINUM RETAINERS (6005-T5), AND ¼"-20 STAINLESS STEEL TORX HEAD SCREWS 6" O.C. THE SCREWS ENGAGE THE SERRATIONS IN THE ALUMINUM EXTRUSIONS BELOW. EPDM GASKETS ARE USED ON THE INTERIOR (⅛" X ½") AND EXTERIOR (¼" X ⅜") TO CUSHION THE GLASS, AND A FULL SILICONE WEATHER SEAL AND SNAP-ON CAPS ARE APPLIED TO PREVENT AIR AND WATER INFILTRATION.

2) SKYLIGHT TYPES: SINCE ALMOST ALL SKYLIGHTS BUILT USING SUPER SKY'S STANDARD TUBULAR GLAZING SYSTEM ARE CUSTOM DESIGNED FOR A PARTICULAR BUILDING, VIRTUALLY NONE OF THEM ARE EXACTLY THE SAME. IN RECOGNITION OF THIS FACT, THE TEST SPECIMENS AS SHOWN ON SHEETS B1-B5 WERE DEVELOPED SO AS TO TEST THE FOUR STANDARD DETAILS USED ON MOST SKYLIGHT PROJECTS (CURB, RAFTER, CROSSBAR, AND KNEE). THE DESIGN PRESSURE, GLASS TYPE, AND GLASS SIZES WERE ALSO SELECTED TO SUIT THE MOST POSSIBLE SKYLIGHT PROJECTS.

EXAMPLES OF THESE SKYLIGHTS ARE SHOWN BELOW.

SUPER SKY'S STANDARD TUBULAR SKYLIGHT GLAZING SYSTEM

PRODUCT APPROVAL TESTING PER TAS-201, TAS-202, TAS-203

STANDARD DETAILS TESTED:

1. CURB (SEE DETAIL 1/B3)
2. RAFTER (SEE DETAIL 3/B3)
3. CROSSBAR (SEE DETAIL 2/B3)
4. KNEE [HIP] (SEE DETAIL 1/B4)

PLEASE SEE DRAWINGS B1-B5 FOR COMPLETE SPECIFICATIONS OF THE MOCK-UPS TESTED.

GENERAL NOTES:

1) THIS SYSTEM IS APPROVED FOR: DESIGN PRESSURES UP TO +/- 80 PSF.

2) GLASS TYPE TESTED: 1 5/16" IGU WITH ¼" HEAT STRENGTHENED OUTER LITE, ½" AIR SPACE,
9/16" CLEAR SENTRY GLASS PLUS LAMINATED INNER LITE BY VIRACON, INC. CONSISTING OF:
¼" CLEAR HEAT STRENGTHENED GLASS,
.090" SENTRY GLASS PLUS INTERLAYER MIAMI DADE COUNTY PRODUCT CONTROL, APPROVAL NO. 98-0608.03
¼" CLEAR HEAT STRENGTHENED GLASS.

3) LARGE MISSILE IMPACT TESTED. THIS GLASS PRODUCT IS APPROVED FOR USE FROM GRADE UP TO 30', OR HIGHER IF DESIRED.

4) APPROVED UP TO A MAXIMUM LITE SIZE OF 30 SQ. FT.

5) THE ALUMINUM EXTRUSIONS TESTED WERE SIZED PER STRUCTURAL CALCULATIONS TO SUIT THE SPANS AND DESIGN PRESSURE TESTED.

6) ALUMINUM CONTACTING MATERIALS NOT CONSIDERED COMPATIBLE SHALL BE PROTECTED PER SECTION 2003.8.4.2 OF THE FLORIDA BUILDING CODE.

7) THIS APPROVAL IS LIMITED TO THE MAXIMUM AREA OF THE 1 5/16" INSULATED GLASS, THE FULLY ASSEMBLED GLAZING DETAILS SYSTEM TO THE SUPPORTING RAFTERS AND THE MAXIMUM DESIGN PRESSURE SHOWN ON THESE DRAWINGS.

8) THE STRUCTURAL ADEQUACY OF THE SUPPORTING STRUCTURAL MEMBERS, (CURBS, RAFTERS, PURLINS, AND ALL OTHER FRAMING MEMBERS) IS NOT PART OF THIS APPROVAL AND IT SHALL BE REVIEWED BY THE STRUCTURAL PLANS EXAMINER OF THE CORRESPONDING BUILDING DEPARTMENT.

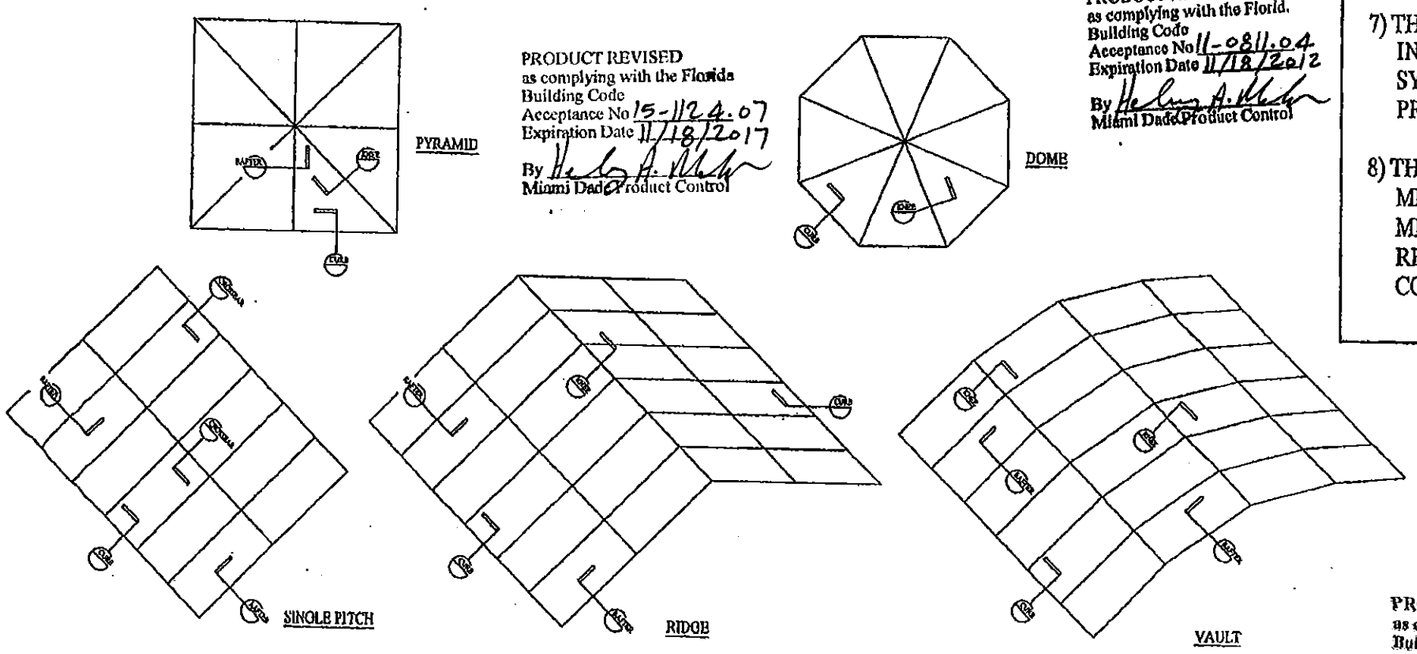

PRODUCT REVISED
as complying with the Florida Building Code
Acceptance No 15-1124.07
Expiration Date 11/18/2017
By
Miami Dade Product Control

PRODUCT REVISED
as complying with the Florida Building Code
Acceptance No 11-0811.04
Expiration Date 11/18/2012
By
Miami Dade Product Control

PRODUCT RENEWED
as complying with the Florida Building Code
Acceptance No 07-0810.02
Expiration Date 11/18/2012
By
Miami Dade Product Control Division

PRODUCT RENEWED
as complying with the Florida Building Code
Acceptance No 12-1023.06
Expiration Date 11/18/2017
By
Miami Dade Product Control

DADE COUNTY USE

PRODUCT REVISED
as complying with the Florida Building Code
Acceptance No 05-1208.05
Expiration Date 11/18/2007
By
Miami Dade Product Control Division

ENGINEER STAMP

David S. Barron
11-15-05

DAVID S. BARRON
21 DARTMOUTH DRIVE
GREENSBURG, PA 15601
LISCENCE #36374

SUPER SKY PRODUCTS ENTERPRISES, LLC
16911 N. ENTERPRISE DR.
MEQUON, WISCONSIN 53097
262-242-2000

CURRENT NOA
#02-1009.05
LARGE MISSILE

REVISION
1 NEW GLASS TYPE 08/03/04 TK
REVISION TO CURRENT NOA 02-1009.05
EXP. 11-18-07

PROJECT
MOCK-UP - DADE COUNTY PRODUCT APPROVAL
DADE COUNTY, FL

ENGINEER
DAVID S. BARRON
MEQUON, WI

TEST LABORATORY
HURRICANE TEST LAB
RIVIERA BEACH, FL

DRAWN TK	DATE 06/29/04
SCALE --	APPROVAL 1 (DP)
DRAWING 2002-0246	
JOB PLANNING 27232	
JOB FILE NAME 20020246B-D1	

B1
OF 6

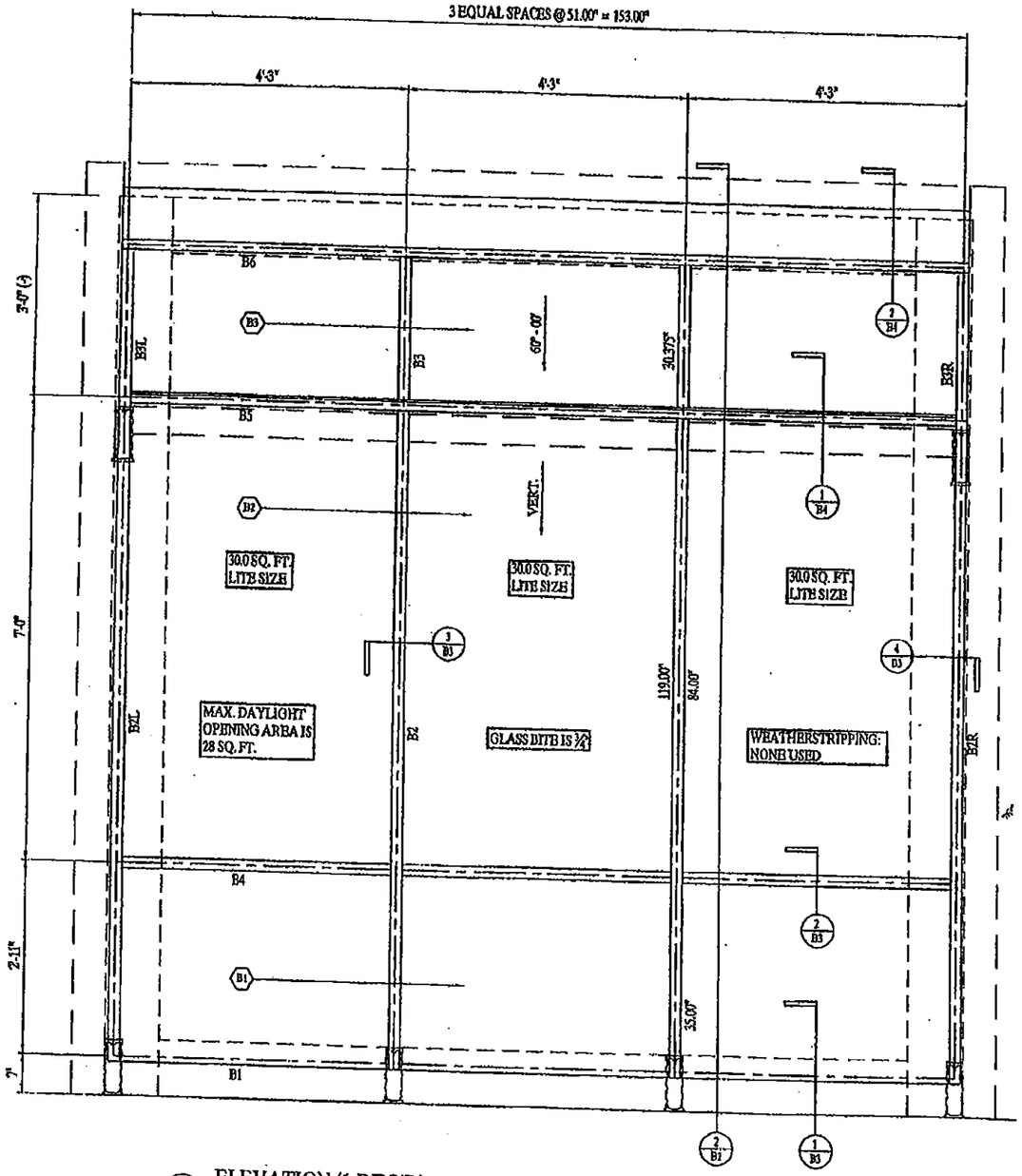

1/B2 ELEVATION (1 REQ'D)
SCALE: 1" = 1'-0"

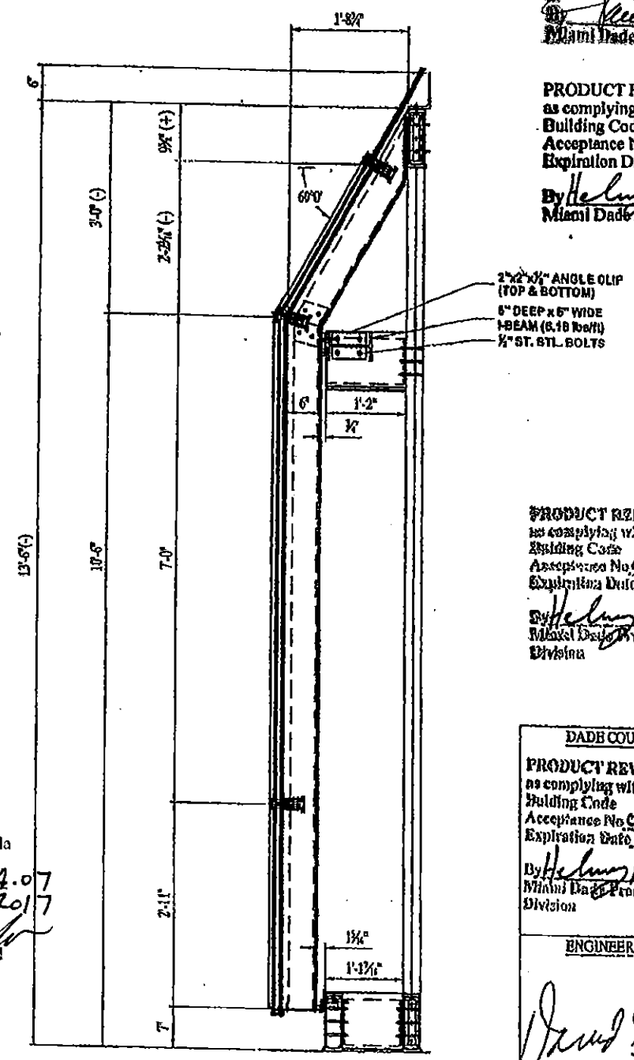

2/B2 THRU SECTION
SCALE: 1" = 1'-0"

PRODUCT RENEWED
as complying with the Florida Building Code
Acceptance No 12-1023.06
Expiration Date 11/18/2017
By
Miami Dade Product Control

PRODUCT REVISED
as complying with the Florida Building Code
Acceptance No 11-0811.04
Expiration Date 11/18/2012
By
Miami Dade Product Control

PRODUCT RENEWED
as complying with the Florida Building Code
Acceptance No 07-0810.02
Expiration Date 11/18/2012
By
Miami Dade Product Control Division

PRODUCT REVISED
as complying with the Florida Building Code
Acceptance No 15-1124.07
Expiration Date 11/18/2017
By
Miami Dade Product Control

DADE COUNTY USE

PRODUCT REVISED
as complying with the Florida Building Code
Acceptance No 05-1208.05
Expiration Date 11/18/2007
By
Miami Dade Product Control Division

ENGINEER STAMP

David S Barron
11-15-05

DAVID S. BARRON
21 DARTMOUTH DRIVE
GREENSBURG, PA 15601
LISCENCE #36374

SUPER SKY PRODUCTS ENTERPRISES, LLC
N59 W EnterprisE Dr.
Mequon, Wisconsin 53092
262-243-2000

REVISION

PROJECT
MOCK-UP - DADE COUNTY PRODUCT APPROVAL
DADE COUNTY, FL

ENGINEER
DAVID S. BARRON
MEQUON, WI

TEST LABORATORY
RIVIERA BEACH, FL

TITLE
ELEVATION & THRU SECTION

DRAWN TK	DATE 06/29/04
SCALE 1" = 1'-0"	APPROVAL 1 (DP)
JOB NO. 2002-0246	

20020246B-D1.dwg

B2
OF 6

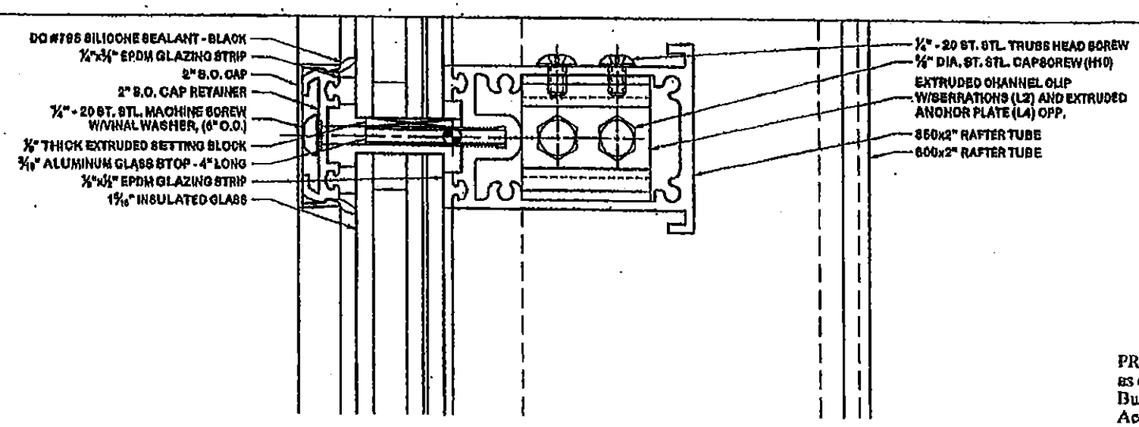

2 B3 CROSSBAR SECTION
SCALE: FULL

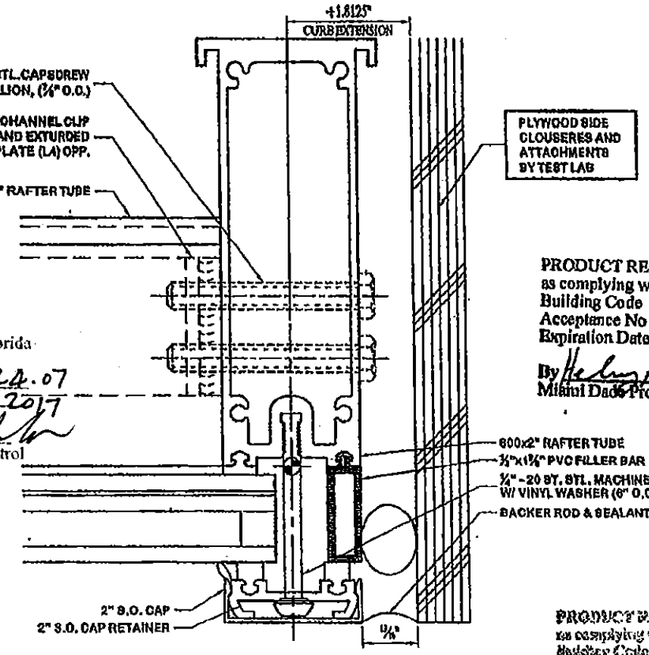

4 B3 VERTICAL END RAFTER
SCALE: FULL

PRODUCT REVISED
as complying with the Florida
Building Code
Acceptance No 15-1124.07
Expiration Date 11/18/2017
By
Miami Dade Product Control

PRODUCT REVISED
as complying with the Florid.
Building Code
Acceptance No 11-0811.04
Expiration Date 11/18/2012
By
Miami Dade Product Control

PRODUCT RENEWED
as complying with the Florida
Building Code
Acceptance No 12-1023.06
Expiration Date 11/18/2017
By
Miami Dade Product Control

PRODUCT RENEWED
as complying with the Florida
Building Code
Acceptance No 07-0810.02
Expiration Date 11/18/2012
By
Miami Dade Product Control
Division

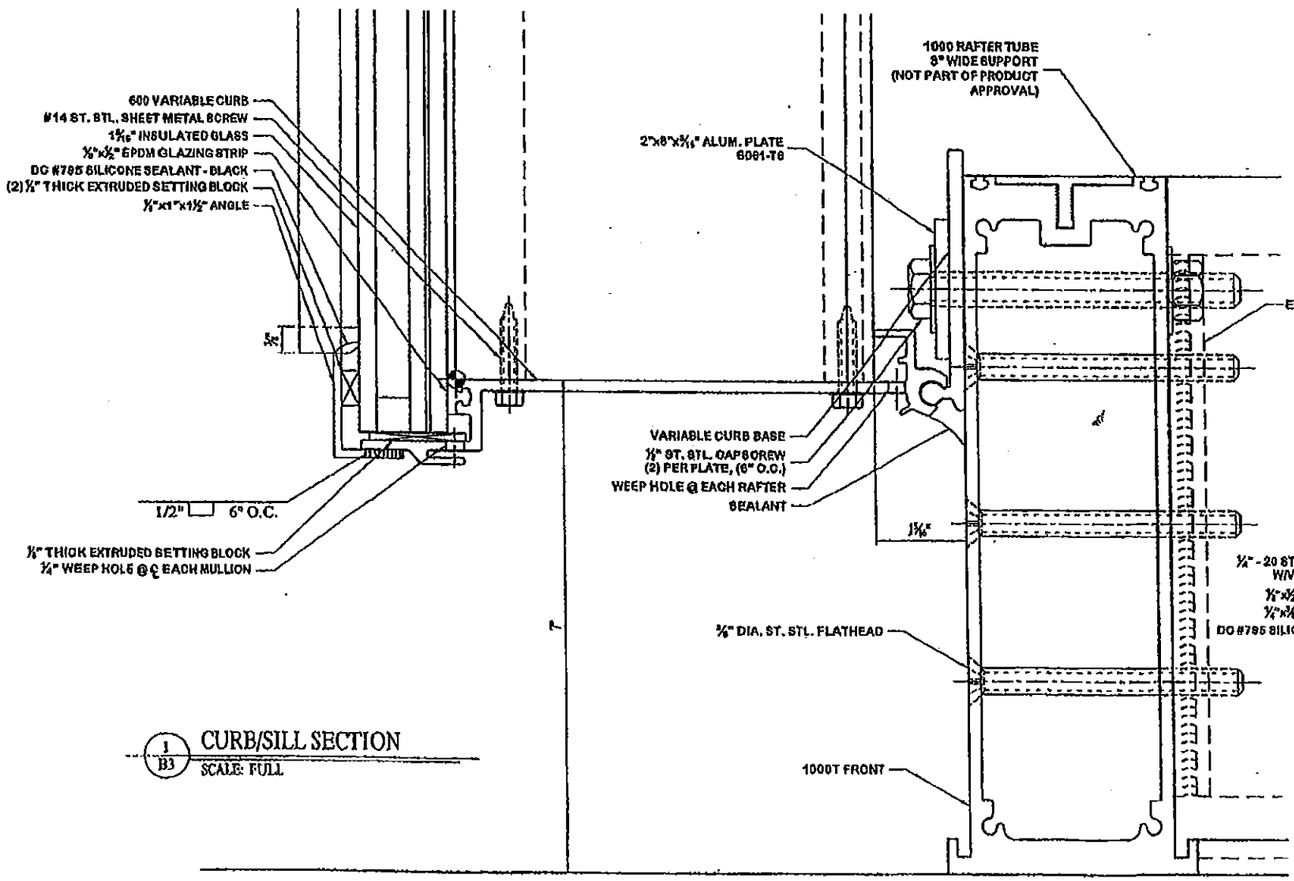

1 B3 CURB/SILL SECTION
SCALE: FULL

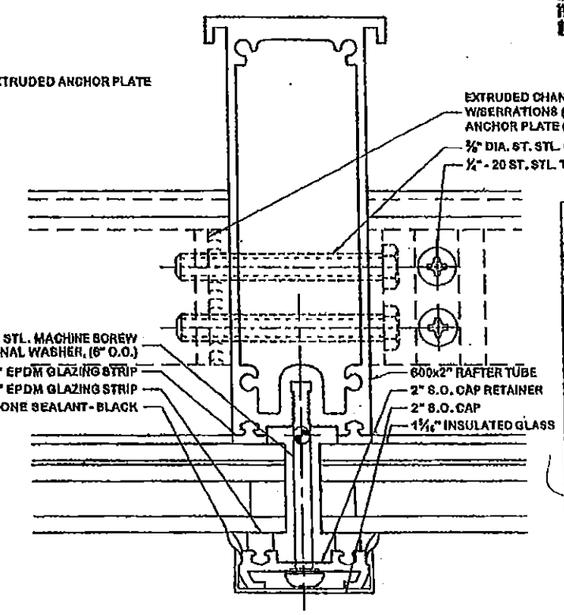

3 B3 VERTICAL RAFTER
SCALE: FULL

DADE COUNTY USE

PRODUCT REVISED
as complying with the Florida
Building Code
Acceptance No 05-1208.05
Expiration Date 11/18/2007
By
Miami Dade Product Control
Division

ENGINEER STAMP

David S Barron
11-15-05

DAVID S. BARRON
21 DARTMOUTH DRIVE
GREENSBURG, PA 15601
LISCENCE #36374

20020246B-D1.dwg

SUPER SKY PRODUCTS ENTERPRISES, LLC
10600 N. ENTERPRISE DR.
MEQUON, WISCONSIN 53097
262-242-3000

REVISION

PROJECT
MOCK-UP - DADE COUNTY PRODUCT APPROVAL
DADE COUNTY, FL

ENGINEER
DAVID S. BARRON
MEQUON, WI

TEST LABORATORY
RIVIERA BEACH, FL

TITLE
SECTION DETAILS

DRAWN TK DATE 06/29/04
SCALE FULL APPROVAL 1 (DP)
DRAWING 2002-0246

B3
OF 6

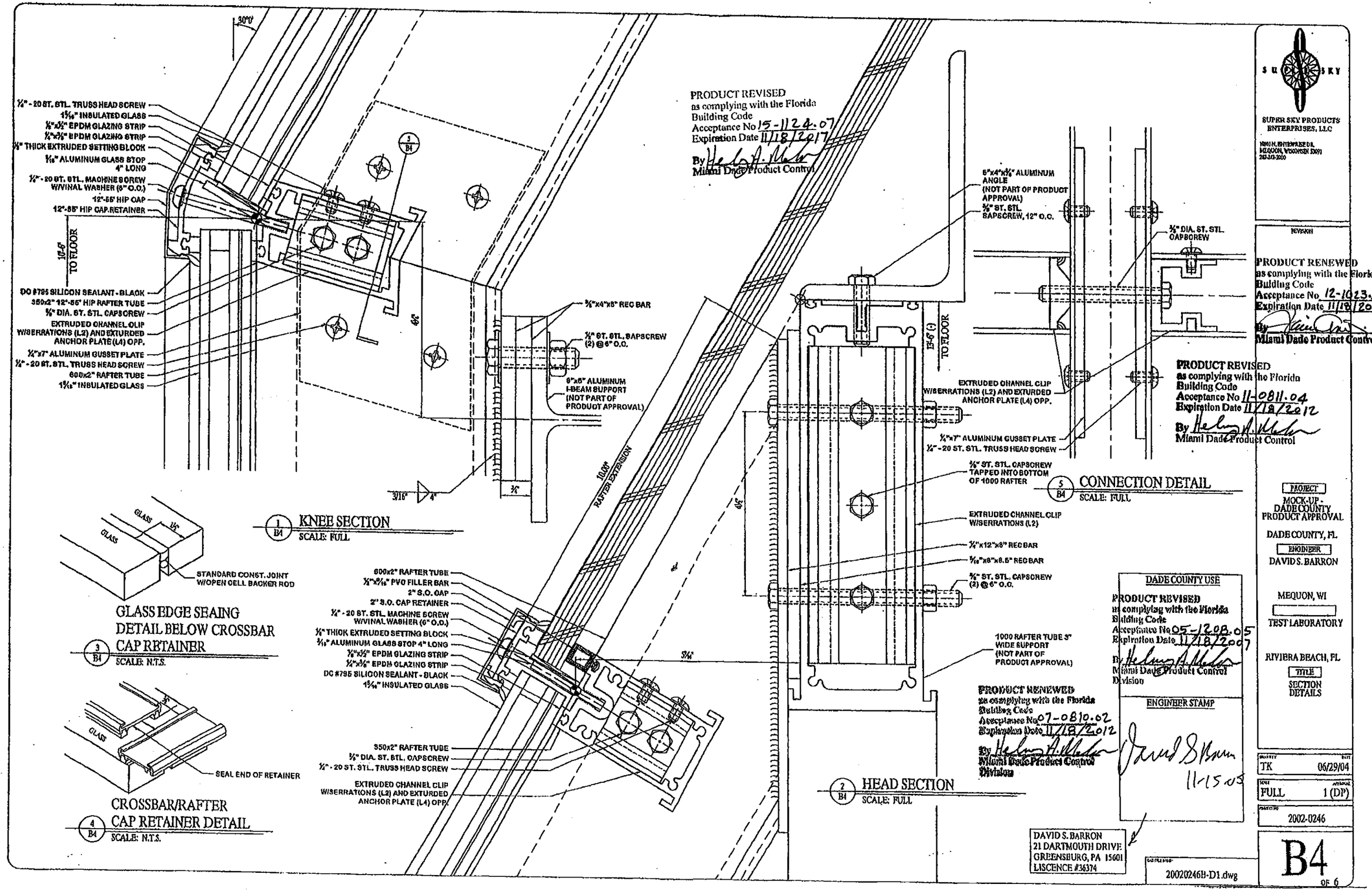

PRODUCT REVISED
as complying with the Florida Building Code
Acceptance No 15-1124.07
Expiration Date 11/18/2017
By [signature]
Miami Dade Product Control

PRODUCT RENEWED
as complying with the Florida Building Code
Acceptance No 12-1023.06
Expiration Date 11/18/2017
By [signature]
Miami Dade Product Control

PRODUCT REVISED
as complying with the Florida Building Code
Acceptance No 11-0811.04
Expiration Date 11/18/2012
By [signature]
Miami Dade Product Control

PRODUCT RENEWED
as complying with the Florida Building Code
Acceptance No 07-0810.02
Expiration Date 11/18/2012
By [signature]
Miami Dade Product Control Division

DADE COUNTY USE

PRODUCT REVISED
as complying with the Florida Building Code
Acceptance No 05-1208.05
Expiration Date 11/18/2007
By [signature]
Miami Dade Product Control Division

ENGINEER STAMP

[signature] 11-15-05

DAVID S. BARRON
21 DARTMOUTH DRIVE
GREENSBURG, PA 15601
LISCENCE #36374

SUPER SKY PRODUCTS ENTERPRISES, LLC
1000 N. ENTERPRISE DR.
MEQUON, WISCONSIN 53092
262-323-2000

REVISION

PROJECT
MOCK-UP - DADE COUNTY PRODUCT APPROVAL

DADE COUNTY, FL

ENGINEER
DAVID S. BARRON

MEQUON, WI

TEST LABORATORY

RIVIERA BEACH, FL

TITLE
SECTION DETAILS

DRAWN BY: TK	DATE: 06/29/04
SCALE: FULL	APPROVAL: 1 (DP)
PROJECT NO: 2002-0246	
DATE FILE NO: 20020246B-D1.dwg	

B4 OF 6

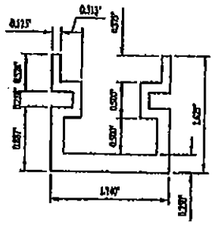

SUMMARY OF PROPERTIES

CENTRE OF MASS [.87,0.67416,0]
SURFACE AREA 1.0164 INCH**2
MOMENT ABOUT X AXIS 0.329661 INCH**4
MOMENT ABOUT Y AXIS 0.408568 INCH**4
POLAR MOMENT 0.686529 INCH**4
PRINCIPAL AXES ROTATION ANGLE = 0°-0'
RADII OF GYRATION:
POLAR 0.780568 INCH
X AXIS 0.47486 INCH
Y AXIS 0.652072 INCH

WEIGHT PER LINEAR FOOT 1.191526 LBS
ALUMINUM ALLOT 6005-T6

CHANNEL CLIP
SCALE: FULL

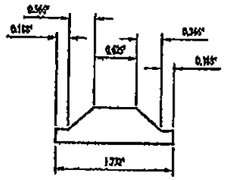

SUMMARY OF PROPERTIES

CENTRE OF MASS [0.666,0.206788,0]
SURFACE AREA 0.635642 INCH**2
MOMENT ABOUT X AXIS 0.0118681 INCH**4
MOMENT ABOUT Y AXIS 0.110198 INCH**4
POLAR MOMENT 0.122066 INCH**4
PRINCIPAL AXES ROTATION ANGLE = 0°-0'
RADII OF GYRATION:
POLAR 0.459218 INCH
X AXIS 0.186642 INCH
Y AXIS 0.41637 INCH

WEIGHT PER LINEAR FOOT 0.743701 LBS
ALUMINUM ALLOT 6005-T5

ANCHOR PLATE
SCALE: FULL

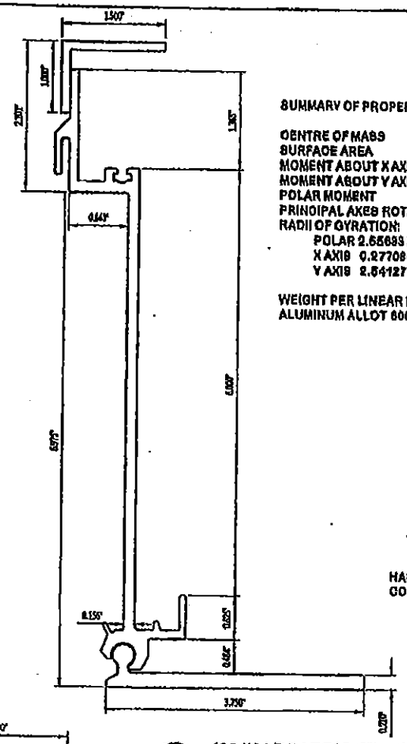

SUMMARY OF PROPERTIES

CENTRE OF MASS [-1.35908,0.607898,0]
SURFACE AREA 1.67668 INCH**2
MOMENT ABOUT X AXIS 0.128744 INCH**4
MOMENT ABOUT Y AXIS 10.8294 INCH**4
POLAR MOMENT 10.9581 INCH**4
PRINCIPAL AXES ROTATION ANGLE = 85°-23'
RADII OF GYRATION:
POLAR 2.55693 INCH
X AXIS 0.277084 INCH
Y AXIS 2.54127 INCH

WEIGHT PER LINEAR FOOT 1.951950 LBS
ALUMINUM ALLOT 6005-T6

600 VARIABLE CURB
SCALE: FULL

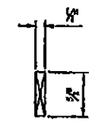

1/8" x 5/8" x 4" LONG SILICONE SETTING BLOCK
SCALE: FULL

HARDNESS.....(SHORE A) 50 + 5 DUROMETER
COLOR.....BLACK

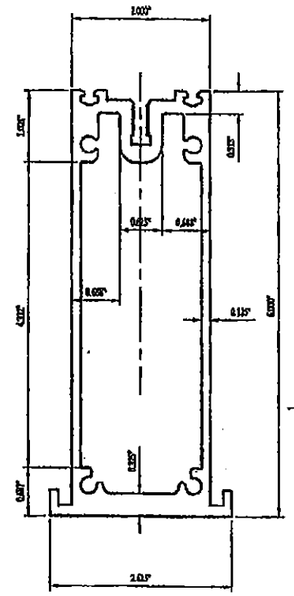

SUMMARY OF PROPERTIES

CENTRE OF MASS (1.81282,3.04689,0)
SURFACE AREA 3.82237 INCH**2
MOMENT ABOUT X AXIS 1.98402 INCH**4
MOMENT ABOUT Y AXIS 16.8559 INCH**4
POLAR MOMENT 18.8399 INCH**4
PRINCIPAL AXES ROTATION ANGLE = 90°-0'
RADII OF GYRATION:
POLAR 2.46871 INCH
X AXIS 0.781089 INCH
Y AXIS 2.27857 INCH

WEIGHT PER LINEAR FOOT 3.905278 LBS
ALUMINUM ALLOT 6005-T6

600 RAFTER TUBE
SCALE: FULL

SUPER SKY PRODUCTS ENTERPRISES, LLC
N0011 N ENTERPRISE DR
MEQUON, WISCONSIN 53092
262-242-2000

REVISION

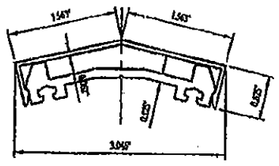

HIP CAP & RETAINER
SCALE: FULL

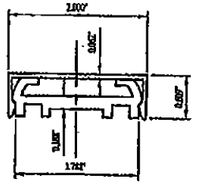

RAFTER CAP & RETAINER
SCALE: FULL

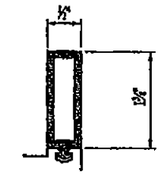

1/2" x 1 3/8" RIGID PVC FILLER BAR
SCALE: FULL

RIGID PVC #820 W/ .095" MIN WALL

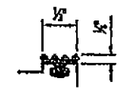

1/8" x 1/2" EPDM GLAZING STRIP
SCALE: FULL

HARDNESS.....(SHORE A) 60 + 5 DUROMETER
TENSILE STRENGTH.....800 PSI (MIN)
ELONGATION.....300% (MIN)
TEAR; DIE B, PSI.....65 (MIN)
COLOR.....BLACK

PRODUCT REVISED
as complying with the Florida
Building Code
Acceptance No 11-0811.04
Expiration Date 11/18/2012
By Helena A. Nelson
Miami Dade Product Control

PRODUCT RENEWED
as complying with the Florida
Building Code
Acceptance No 12-1023.06
Expiration Date 11/18/2017
By [illegible]
Miami Dade Product Control

PRODUCT RENEWED
as complying with the Florida
Building Code
Acceptance No 07-0810.02
Expiration Date 11/18/2012
By Helena A. Nelson
Miami Dade Product Control
Division

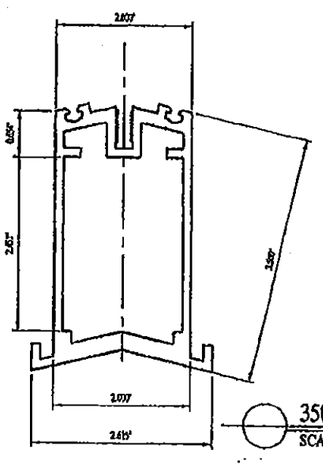

SUMMARY OF PROPERTIES

CENTRE OF MASS [1.81244,1.80283,0]
AREA 2.07785 INCH**2
MOMENT ABOUT X AXIS 1.26674 INCH**4
MOMENT ABOUT Y AXIS 3.64863 INCH**4
PRINCIPAL AXES ROTATION ANGLE = 90°-0'
RADII OF GYRATION:
X AXIS 3.85395 INCH
Y AXIS 2.73855 INCH

WEIGHT PER LINEAR FOOT 2.48108 LBS
ALUMINUM ALLOT 6005-T5

350 HIP TUBE
SCALE: FULL

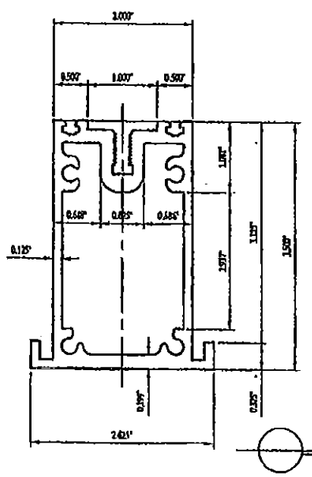

SUMMARY OF PROPERTIES

CENTRE OF MASS [1.81246,1.7169,0]
SURFACE AREA 2.12843 INCH**2
MOMENT ABOUT X AXIS 1.2925 INCH**4
MOMENT ABOUT Y AXIS 3.52933 INCH**4
POLAR MOMENT 4.82184 INCH**4
PRINCIPAL AXES ROTATION ANGLE = -90°-0'
RADII OF GYRATION:
POLAR 1.50891 INCH
X AXIS 0.780183 INCH
Y AXIS 1.28922 INCH

WEIGHT PER LINEAR FOOT 2.484413 LBS
ALUMINUM ALLOT 6005-T5

350 RAFTER TUBE
SCALE: FULL

PRODUCT REVISED
as complying with the Florida
Building Code
Acceptance No 15-1124.07
Expiration Date 11/18/2017
By Helena A. Nelson
Miami Dade Product Control

1/4" x 3/8" EPDM GLAZING STRIP
SCALE: FULL

HARDNESS.....(SHORE A) 60 + 5 DUROMETER
TENSILE STRENGTH.....800 PSI (MIN)
ELONGATION.....300% (MIN)
TEAR; DIE B, PSI.....65 (MIN)
COLOR.....BLACK

DADE COUNTY USE

PRODUCT REVISED
as complying with the Florida
Building Code
Acceptance No 05-1208.05
Expiration Date 11/18/2007
By Helena A. Nelson
Miami Dade Product Control
Division

ENGINEER STAMP

David S. Barron
11-15-05

DAVID S. BARRON
21 DARTMOUTH DRIVE
GREENSBURG, PA 15601
LISCENCE #36314

PROJECT	MOCK-UP - DADE COUNTY PRODUCT APPROVAL
	DADE COUNTY, FL
ENGINEER	DAVID S. BARRON
	MEQUON, WI
	TEST LABORATORY
	RIVIERA BEACH, FL
TITLE	EXTRUSIONS
DRAWN BY: TK	DATE: 06/29/04
SCALE: FULL	APPROVE: 1 (DP)
PROJECT NO: 2002-0246	

CAD FILENAME: 20020246B-D1.dwg

B5
OF 6

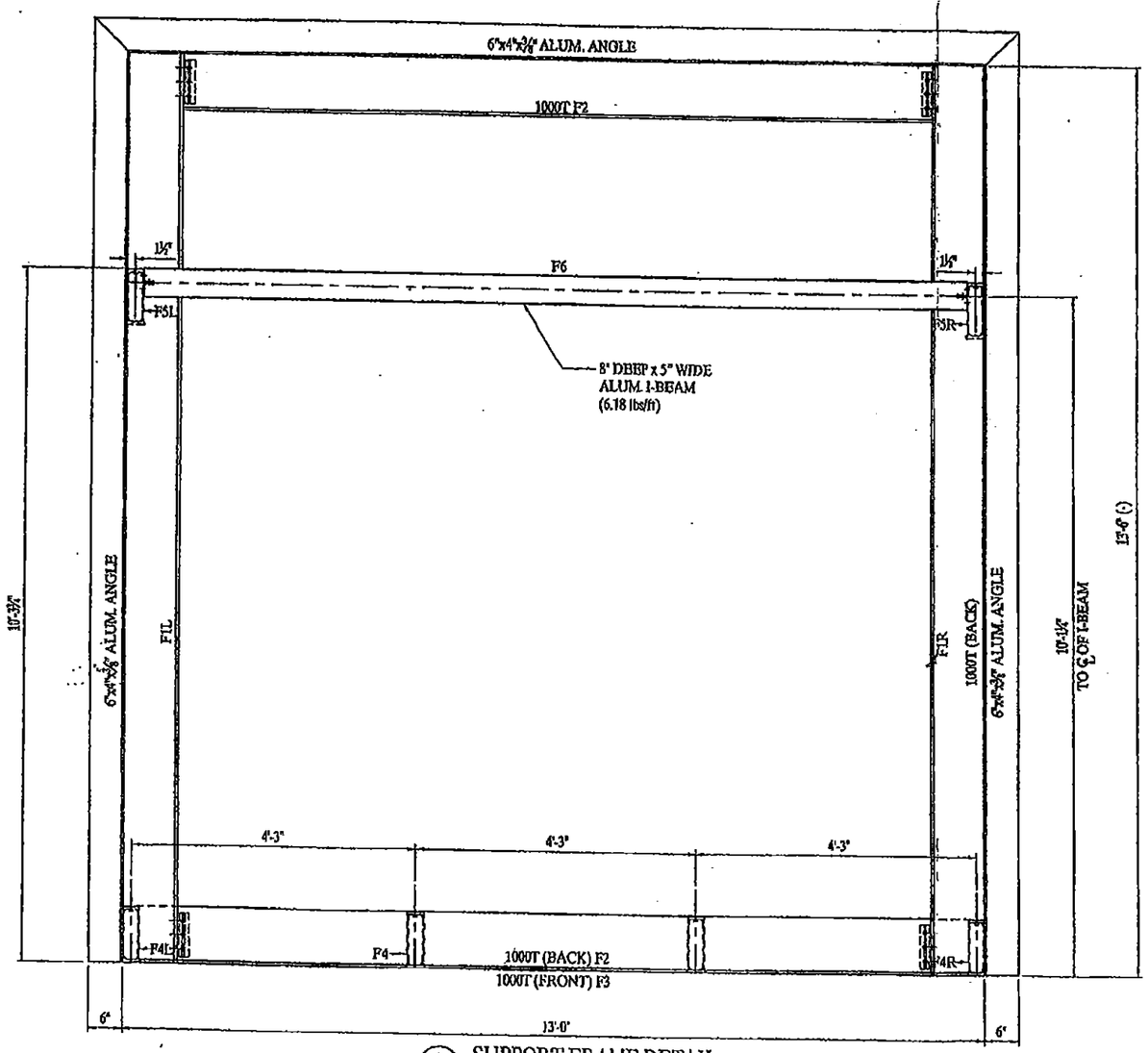

1 / B6 SUPPORT FRAME DETAIL
SCALE: 1" = 1'-0"

Note: Framing on this page not part of Product Approval.

PRODUCT REVISED
as complying with the Florida
Building Code
Acceptance No 15-1124.07
Expiration Date 11/18/2017
By
Miami Dade Product Control

PRODUCT RENEWED
as complying with the Florida
Building Code
Acceptance No 11-0811.04
Expiration Date 11/18/2012
By
Miami Dade Product Control

PRODUCT RENEWED
as complying with the Florida
Building Code
Acceptance No 12-1023.06
Expiration Date 11/18/2017
By
Miami Dade Product Control

PRODUCT RENEWED
as complying with the Florida
Building Code
Acceptance No 07-0810.02
Expiration Date 11/18/2012
By
Miami Dade Product Control
Division

DADE COUNTY USE

PRODUCT REVISED
as complying with the Florida
Building Code
Acceptance No 05-1208.05
Expiration Date 11/18/2007
By
Miami Dade Product Control
Division

ENGINEER STAMP

11-15-05

DAVID S. BARRON
21 DARTMOUTH DRIVE
GREENSBURG, PA 15601
LISCENCE #36374

SUPER SKY PRODUCTS ENTERPRISES, LLC

REVISION

PROJECT
MOCK-UP - DADE COUNTY PRODUCT APPROVAL

DADE COUNTY, FL

ENGINEER
DAVID S. BARRON

MEQUON, WI

TEST LABORATORY

RIVIERA BEACH, FL

TITLE
SUPPORT FRAME DETAIL

DRAWN TK
DATE 06/29/04
SCALE 1"=1'-0"
APPROVAL 1 (DP)
PROJECT NO. 2002-0246

20020246B-D1.dwg

B6 OF 6