MIAMI-DADE COUNTY
DEPARTMENT OF REGULATORY AND ECONOMIC RESOURCES (RER)
BOARD AND CODE ADMINISTRATION DIVISION

MIAMI-DADE COUNTY
PRODUCT CONTROL SECTION
11805 SW 26 Street, Room 208
Miami, Florida 33175-2474
T (786) 315-2590 F (786) 315-2599
www.miamidade.gov/economy

NOTICE OF ACCEPTANCE (NOA)

York / Johnson Controls, Inc.
15901 SW 29th Street, Suite 801
Miramar, FL 33027

SCOPE:
This NOA is being issued under the applicable rules and regulations governing the use of construction materials. The documentation submitted has been reviewed and accepted by Miami-Dade County RER- Product Control Section to be used in Miami Dade County and other areas where allowed by the Authority Having Jurisdiction (AHJ).

This NOA shall not be valid after the expiration date stated below. The Miami-Dade County Product Control Section (In Miami Dade County) and/or the AHJ (in areas other than Miami Dade County) reserve the right to have this product or material tested for quality assurance purposes. If this product or material fails to perform in the accepted manner, the manufacturer will incur the expense of such testing and the AHJ may immediately revoke, modify, or suspend the use of such product or material within their jurisdiction. RER reserves the right to revoke this acceptance, if it is determined by Miami-Dade County Product Control Section that this product or material fails to meet the requirements of the applicable building code.

This product is approved as described herein, and has been designed to comply with the High Velocity Hurricane Zone of the Florida Building Code.

DESCRIPTION: Solution XT Rooftop Air Handling Unit

APPROVAL DOCUMENT: Drawing No. 06-07, titled "Solution XT Rooftop Air Handling Unit", sheets 1 through 17 of 17, prepared by Al-Farooq Corporation, dated 08/03/2006, last revision #E dated 08/22/2015, signed and sealed by Javad Ahmad, P.E., on 08/04/2016, bearing the Miami-Dade County Product Control Revision stamp with the Notice of Acceptance number & the expiration date by the Miami-Dade County Product Control Section.

MISSILE IMPACT RATING: Large and Small Missile Impact Resistant

LABELING: Each unit shall bear a permanent label with the manufacturer's name or logo, York, PA or Albany, MO and the following statement: "Miami-Dade County Product Control Approved", unless otherwise noted herein.

RENEWAL of this NOA shall be considered after a renewal application has been filed and there has been no change in the applicable building code negatively affecting the performance of this product.

TERMINATION of this NOA will occur after the expiration date or if there has been a revision or change in the materials, use, and/or manufacture of the product or process. Misuse of this NOA as an endorsement of any product, for sales, advertising or any other purposes shall automatically terminate this NOA. Failure to comply with any section of this NOA shall be cause for termination and removal of NOA.

ADVERTISEMENT: The NOA number preceded by the words Miami-Dade County, Florida, and followed by the expiration date may be displayed in advertising literature. If any portion of the NOA is displayed, then it shall be done in its entirety.

INSPECTION: A copy of this entire NOA shall be provided to the user by the manufacturer or its distributors and shall be available for inspection at the job site at the request of the Building Official.

This NOA **revises NOA # 14-0220.01** and consists of this page 1, evidence submitted pages E-1, E-2, E-3, & E-4 as well as approval document mentioned above.
The submitted documentation was reviewed by **Helmy A. Makar, P.E., M.S.**

MIAMI-DADE COUNTY APPROVED

Helmy A. Makar
08/18/2016

NOA No. 15-1124.10
Expiration Date: 12/09/2019
Approval Date: 08/18/2016

York / Johnson Controls, Inc.

NOTICE OF ACCEPTANCE: EVIDENCE SUBMITTED

1. EVIDENCE SUBMITTED UNDER PREVIOUS APPROVAL #04-0816.03

A. DRAWINGS

1. *Drawing No. MT , titled " Solution XT Rooftop AHU Assembly ", sheets 1 through 19 of 19, prepared by Mechanical Engineering Solutions, Inc., signed and sealed by Mark E. Awmiller, P.E. on November 18, 2004*

B. TESTS

1. *Test reports on 1) Uniform Static Air Pressure Test, Loading per FBC TAS 202-94*
   2) Large Missile Impact Test per FBC, TAS 201-94
   3) Cyclic Wind Pressure Loading per FBC, TAS 203-94
   along with marked-up drawings and installation diagram of Solution XT Air Handling Unit, prepared by Architectural Testing, Test Report No. 47804.01-122-18, dated July 12, 2004, signed and sealed by Steven M. Urich, P.E.

C. CALCULATIONS

1. *None.*

D. QUALITY ASSURANCE

1. *By Miami-Dade County Building Code Compliance Office.*

E. MATERIAL CERTIFICATIONS

1. *Die Drawings.*

F. STATEMENTS

1. *Statement letter of conformance, dated August 6, 2004, signed and sealed by Mark E. Awmiller, P.E.*
2. *Statement letter of no financial interest, dated August 6, 2004, signed and sealed by Mark E. Awmiller, P.E.*

2. EVIDENCE SUBMITTED UNDER PREVIOUS APPROVAL #07-0130.03

A. DRAWINGS

1. *Drawing No. 06-07 , titled " Solution XT Rooftop Air Handling Unit ", sheets 1 through 17 of 17, prepared by Al-Farooq Corporation, dated 08/03/2006, last revision #A dated 07/06/2007, signed and sealed by Humayoun Farooq, P.E. on 11/05/2007.*

Helmy A. Makar, P.E., M.S.
Product Control Section Supervisor
NOA No. 15-1124.10
Expiration Date: 12/09/2019
Approval Date: 08/18/2016

NOTICE OF ACCEPTANCE: EVIDENCE SUBMITTED

B. TESTS

1. *Test reports on 1) Uniform Static Air Pressure Test, Loading per FBC TAS 202-94*
   2) Large Missile Impact Test per FBC, TAS 201-94
   3) Cyclic Wind Pressure Loading per FBC, TAS 203-94
   along with marked-up drawings and installation diagram of Solution XT Air Handling Unit, prepared by Architectural Testing, Test Report No. 54612.01-122-18, dated September 20, 2005, signed and sealed by Steven M. Urich, P.E.

C. CALCULATIONS

1. *None.*

D. QUALITY ASSURANCE

1. *By Miami-Dade County Building Code Compliance Office.*

E. MATERIAL CERTIFICATIONS

1. *Die Drawings.*

3. EVIDENCE SUBMITTED UNDER PREVIOUS APPROVAL #09-0610.16

A. DRAWINGS

1. *Drawing No. 06-07, titled "Solution XT Rooftop Air Handling Unit", sheets 1 through 17 of 17, prepared by Al-Farooq Corporation, dated 08/03/2006, last revision #B dated 03/03/2009, signed and sealed by Arshad Viqar, P.E., on 08/26/2009.*

B. TESTS

1. *None.*

C. CALCULATIONS

1. *None.*

D. QUALITY ASSURANCE

1. *By Miami-Dade County Building Code Compliance Office.*

E. MATERIAL CERTIFICATIONS

1. *Die Drawings.*

Helmy A. Makar, P.E., M.S.
Product Control Section Supervisor
NOA No. 15-1124.10
Expiration Date: 12/09/2019
Approval Date: 08/18/2016

NOTICE OF ACCEPTANCE: EVIDENCE SUBMITTED

4. EVIDENCE SUBMITTED UNDER PREVIOUS APPROVAL # 10-0218.04

A. DRAWINGS

1. None.

B. TESTS

1. None.

C. CALCULATIONS

1. None.

D. QUALITY ASSURANCE

1. By Miami-Dade County Building Code Compliance Office.

E. MATERIAL CERTIFICATIONS

1. None.

5. EVIDENCE SUBMITTED UNDER PREVIOUS APPROVAL # 12-0215.07

A. DRAWINGS

1. Drawing No. 06-07, titled "Solution XT Rooftop Air Handling Unit", sheets 1 through 17 of 17, prepared by Al-Farooq Corporation, dated 08/03/2006, last revision #D dated 08/14/2012, signed and sealed by Javad Ahmad, P.E., on 08/28/2012.

B. TESTS

1. None.

C. CALCULATIONS

1. None.

D. QUALITY ASSURANCE

1. By Miami-Dade County Department of Regulatory and Economic Resources.

E. MATERIAL CERTIFICATIONS

1. None.

F. STATEMENTS

1. Statement letter of conformance to FBC 2010 Edition, dated January 20, 2012, signed and sealed by Javad Ahmad, P.E.

Helmy A. Makar, P.E., M.S.
Product Control Section Supervisor
NOA No. 15-1124.10
Expiration Date: 12/09/2019
Approval Date: 08/18/2016

NOTICE OF ACCEPTANCE: EVIDENCE SUBMITTED

6. EVIDENCE SUBMITTED UNDER PREVIOUS APPROVAL # 14-0220.01

A. DRAWINGS

1. None.

B. TESTS

1. None.

C. CALCULATIONS

1. None.

D. QUALITY ASSURANCE

1. By Miami-Dade County Department of Regulatory and Economic Resources.

E. MATERIAL CERTIFICATIONS

1. None.

7. NEW EVIDENCE SUBMITTED

A. DRAWINGS

1. Drawing No. 06-07, titled "Solution XT Rooftop Air Handling Unit", sheets 1 through 17 of 17, prepared by Al-Farooq Corporation, dated 08/03/2006, last revision #E dated 08/22/2015, signed and sealed by Javad Ahmad, P.E., on 08/04/2016.

B. TESTS

1. Clarification letter from Intertek, dated 06/29/16, signed by Timothy J. McGill.

C. CALCULATIONS

1. Calculation titled AFC 15-1023, dated August 05, 2015, 11 pages, prepared by Al-Farooq Corporation, signed and sealed by Javad Ahmad, P.E., on 11/09/2015.

D. QUALITY ASSURANCE

1. By Miami-Dade County Department of Regulatory and Economic Resources.

E. MATERIAL CERTIFICATIONS

1. None.

F. STATEMENTS

1. Statement letter of conformance to FBC 2014 Edition, dated August 05, 2015, signed and sealed by Javad Ahmad, P.E.

Helmy A. Makar, P.E., M.S.
Product Control Section Supervisor
NOA No. 15-1124.10
Expiration Date: 12/09/2019
Approval Date: 08/18/2016

Panels:
Sides & Ends: 16 Ga Outer & Liner
Floor & Roof: 18 Ga Outer & Liner

Fasteners:
Sides Walls: 4.00" Max Centers
Floor & Roof: 8.00" Max Centers

Inside Supports:
Sides: 4 vertical 16 GA Hat Channel per side 086-02108-358
Ends: 3 vertical 12 GA Hat Channel per end 086-02108-869

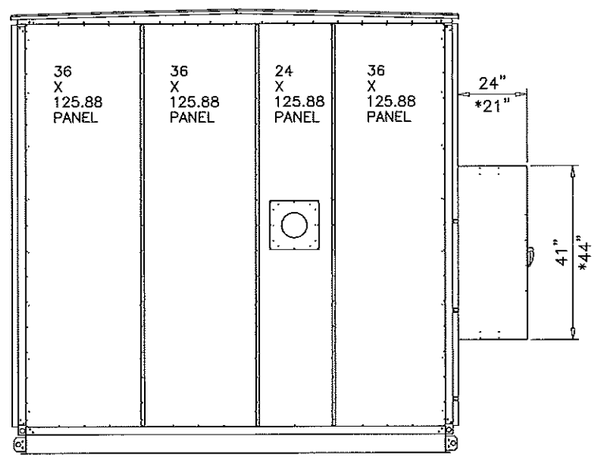

SIDE ELEV.

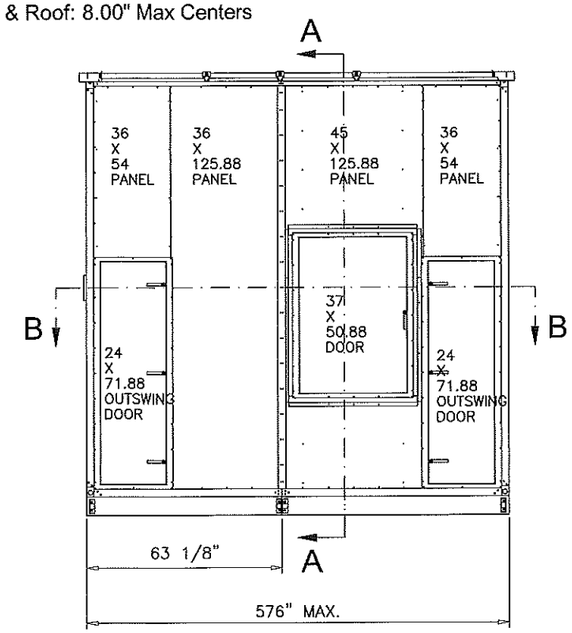

FRONT ELEV.

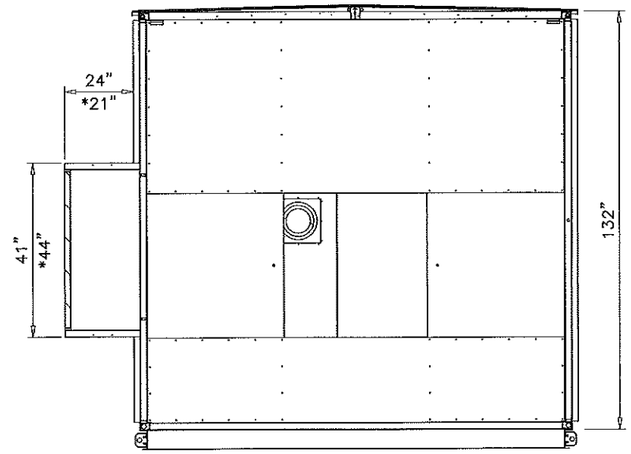

SECTION A–A

GENERAL NOTES

1. THIS PRODUCT HAS BEEN DESIGNED AND TESTED TO COMPLY WITH THE REQUIREMENTS OF THE FLORIDA BUILDING CODE 2014 EDITION INCLUDING HIGH VELOCITY HURRICANE ZONE (HVHZ).
2. STRUCTURAL STEEL SHALL CONFORM TO ASTM DESIGNATION A–36 AND STEEL SHEET SHALL CONFORM TO ASTM DESIGNATION A–653, GALVANIZED WITH A COATING DESIGNATION OF G90. MIN. Fy = 48,380 PSI.
3. ALL CONCRETE SHALL HAVE A 28 DAY COMPRESSIVE STRENGTH OF 3000 PSI.
4. ELECTRICAL AND MECHANICAL DETAILS ARE NOT PART OF THIS APPROVAL.
5. POLYURETHANE SHALL BE RIGID FOAM MIN. DENSITY #2 C.F.
6. MAX. FLAME SPREAD RATING = 5 AS PER ASTM E–84. SMOKE DEVELOPED INDEX = 205. SPONTANEOUS–IGNITION TEMPERATURE = 869°F.
7. ALL STEEL TO BE SHOP PRIMED BEFORE ASSEMBLY.
8. DISSIMILAR MATERIALS IN CONTACT WITH EACH OTHER SHALL BE PROTECTED IN ACCORDANCE WITH S.F.B.C. CHAPTER 30, SECTION 3004.4.
9. MIN. SOIL BEARING CAPACITY = 2500 PSF.
10. A LOAD DURATION INCREASE IS USED IN DESIGN OF ANCHORS INTO WOOD ONLY.
11. MATERIALS INCLUDING BUT NOT LIMITED TO STEEL/METAL SCREWS, THAT COME INTO CONTACT WITH OTHER DISSIMILAR MATERIALS SHALL MEET THE REQUIREMENTS OF THE FLORIDA BLDG. CODE SECTION 2003.8.4.

*12. ALTERNATIVE CONSTRUCTED MOTOR CONTROL ENCLOSURE SEE SHEET 17 FOR DETAILS.

ALLOWABLE DESIGN LOAD		
COMPONENT	POSITIVE	NEGATIVE
WALL	65 PSF	65 PSF
ROOF	65 PSF	65 PSF

1. THE AIR HANDLING UNIT ASSEMBLY HAS BEEN TESTED AND ANALYZED FOR DESIGN PRESSURES NOT TO EXCEED THOSE SHOWN IN THE "ALLOWABLE DESIGN LOADS" TABLE FOR THE MAXIMUM SIZED PANEL DIMENSIONS AND FRAMING DISTANCE SPACING INDICATED ON THE DRAWINGS.
2. THE DETAILS AND SPECIFICATIONS SHOWN ON ALL SHEETS INDICATED REPRESENT THE PRODUCTS AND MATERIALS TESTED AND PROPOSED FOR WATER, AIR, IMPACT, CYCLIC, AND UNIFORM STATIC AIR PRESSURE TESTING IN ACCORDANCE WITH FLORIDA BUILDING CODE PROTOCOLS TAS 201, TAS 202, AND TAS 203 FOR LARGE MISSILE IMPACT. ADDITIONALLY THE PRODUCT WAS TESTED IN ACCORDANCE WITH ASTM E72 FOR COMPONENT SYSTEM RACKING AND ASTM E8 FOR TENSION TESTING OF THE MATERIAL COMPONENTS.
3. ATTACHMENT TO THE ROOF AND THE ROOF CURB TO PREVENT SLIDING AND OVERTURNING OF THE AIR HANDLING UNIT IS NOT PART OF THE SCOPE OF THIS PRODUCT APPROVAL. THESE ELEMENTS SHALL BE REVIEWED BY THE CORRESPONDING BUILDING DEPARTMENT.
4. IT SHALL BE THE RESPONSIBILITY OF THE PERMIT HOLDER TO VERIFY STRUCTURAL INTEGRITY OF THE ROOF/BUILDING STRUCTURE TO SUPPORT ALL LOADS (WIND AND STATIC) SUPERIMPOSED ON THE STRUCTURE BY THE AIR HANDLING UNIT.
5. INTERIOR MOUNTED MECHANICAL EQUIPMENT IS NOT PART OF THIS PRODUCT APPROVAL AND SHALL BE DESIGNED AND INSTALLED BY YORK/JOHNSON CONTROLS IN ACCORDANCE WITH ALL APPLICABLE CODES AND STANDARDS. INTERNAL SUPPORT OF THESE INTERIOR COMPONENTS IS ALSO OUTSIDE THE SCOPE OF THIS PRODUCT APPROVAL.
6. ALL HARDWARE & FASTENERS SHALL BE IN ACCORDANCE WITH THESE DRAWINGS AND SHALL NOT VARY UNLESS SPECIFICALLY STATED ON THE DRAWINGS.
7. ALL METAL THICKNESSES FOR PANELS, STRUCTURAL SUPPORT ELEMENTS AND OTHER COMPONENTS SHALL BE THE MINIMUM SPECIFIED GAGES (SEE SHEET 3 OF 19 FOR METAL GAGE DIMENSIONAL INFORMATION) OR DIMENSIONS INDICATED ON THE DRAWINGS.
8. ALL SHEET STEEL COMPONENTS SHALL BE MINIMUM 44 KSI SHEET STEEL AT THE SPECIFIED THICKNESS THAT CONFORMS TO ASTM A653, WITH G90U GALVANIZED FINISH.

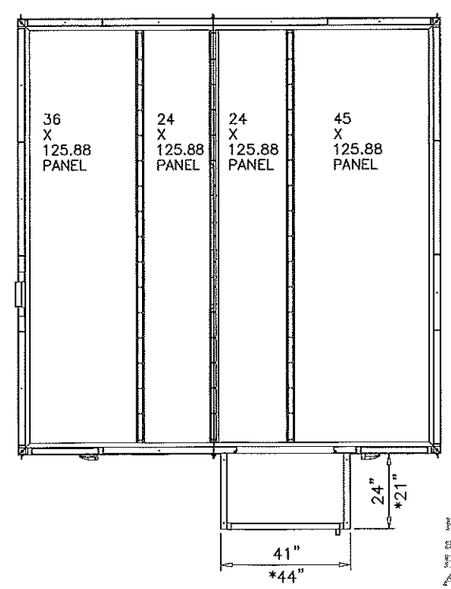

SECTION B–B

PLAN VIEW

ROOF PANELS AND FLOOR PANELS ARE SAME LENGTH IN NOA.

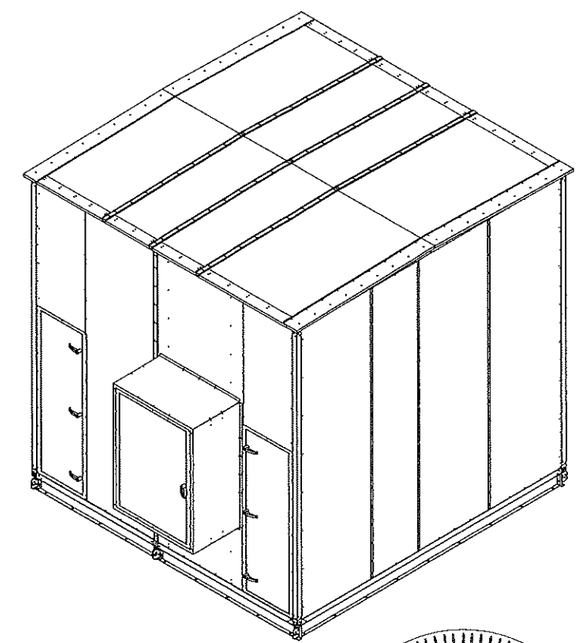

PRODUCT REVISED
as complying with the Florida Building Code
Acceptance No 15-1124.10
Expiration Date 12/09/2019
By
Miami Dade Product Control

AUG 04 2016

JAWAD AHMAD
LICENSE
No. 70592
STATE OF FLORIDA
PROFESSIONAL ENGINEER

AL-FAROOQ CORPORATION
ENGINEERS & PRODUCT DEVELOPMENT
9360 SUNSET DRIVE, SUITE 220
MIAMI, FLORIDA 33173 (C.A.N. 3538)
TEL. (305) 264-8100 FAX. (305) 262-6978

COOLER\06-07\IC

SOLUTION XT ROOFTOP AIR HANDLING UNIT

YORK/JOHNSON CONTROLS INC.
15901 S.W. 29TH STREET, SUITE 801
MIRAMAR, FL. 33027
TEL (954) 389-9675 FAX. (954) 389-9687

revisions:

no	date	by	description
A	07.06.07		REV. PER BCCO COMMENTS
B	03.03.09		UPDATED FOR 2007 FBC
C	01.20.12		UPDATED TO 2010 FBC
D	08.14.12		2010 EDITION TO NOTE 1
E	08.22.15		UPDATED TO 2014 FBC

date: 08–03–06
scale: 1/4"=1–0"
dr. by: HAMID
chk. by:

drawing no.
06–07

Corner Assembly Instructions:

1) Attach DOA Raceway (2) with corner connector (6) using hardware (8) – 2 Screws
2) Attach End Raceway (5) with corner connector (6) using hardware (8) – 2 Screws
3) Attach Vertical Raceway (1) to corner connector (6) using hardware (8) – 4 Screws
4) Attach Corner connector (7) to vertical raceway (1) using hardware (8) – 4 Screws
5) Attach DOA Raceway (3) to corner connector (7) using hardware (8) – 2 Screws
6) Attach End Raceway (4) to corner connector (7) using hardware (8)
– 2 Screws
7) Attach Side Hat Channel (9) to Upper and Lower Raceway (4) & (5) Using Hardware (11) – 4 Screws
8) Attach Front Hat Channel (10) to Upper and Lower Raceway (2) & (3) Using Hardware (11) – 4 Screws

Three other corners are attached in the same manner.

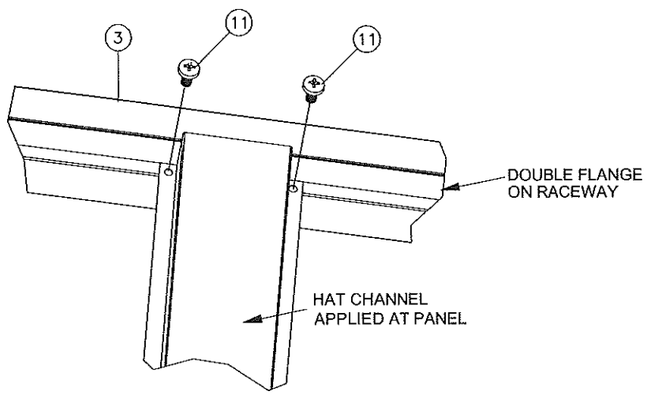

DETAIL A

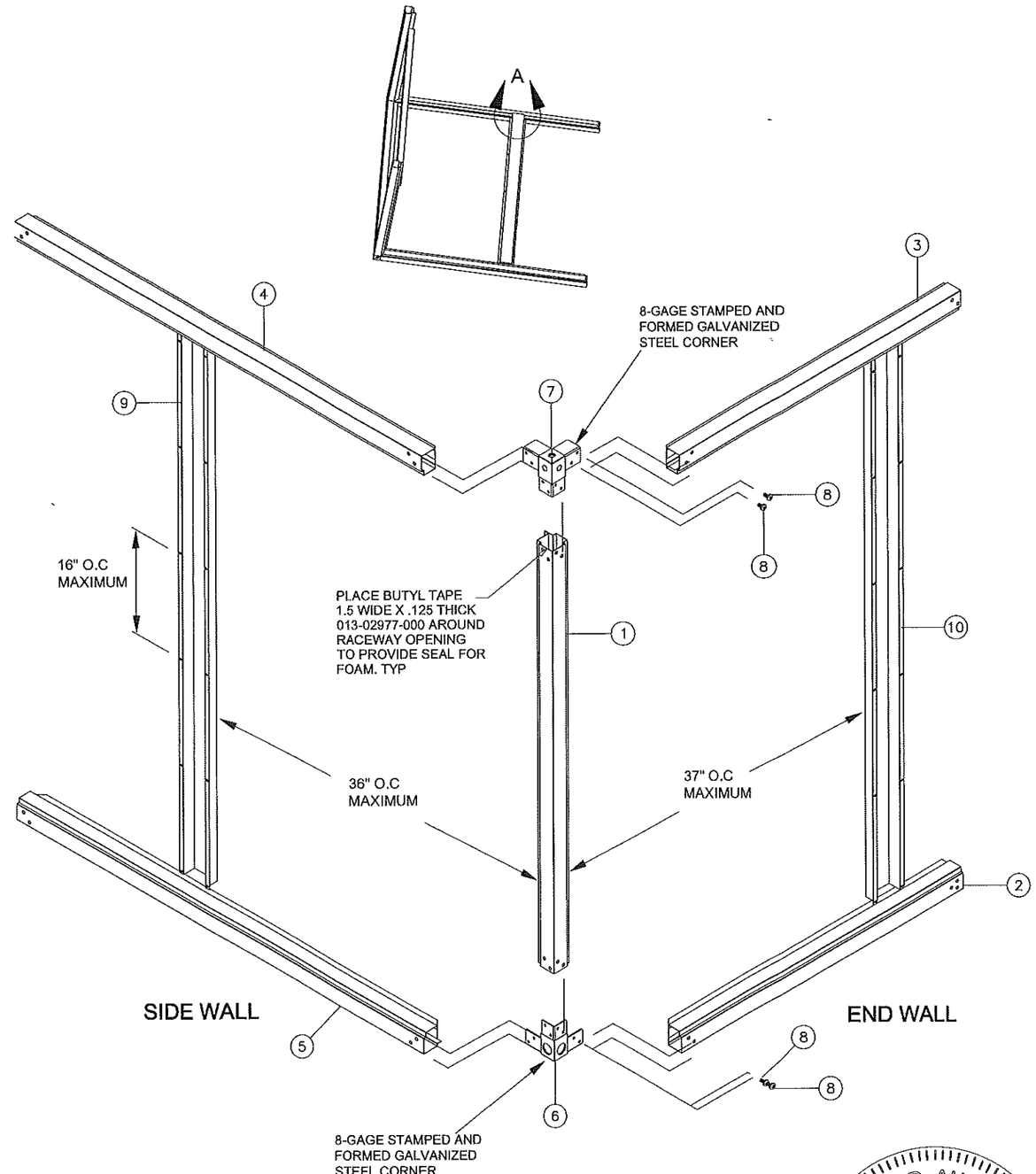

Parts List		
ITEM	QTY	DESCRIPTION
1	1	Vertical Raceway
2	1	FIA Bottom Raceway
3	1	FIA Top Raceway
4	1	End Top Raceway
5	1	End Bottom Raceway
6	1	Bottom Corner Assembly
7	1	Top Corner Assembly
8	6	Screw, hex socket button head 3/8-16 x 3/4" zinc plated
9	2	Side Wall Hat Channel
10	2	End Wall Hat Channel
11	2	Screw, panhead, 1/4-14x1" zinc plated

PRODUCT REVISED
as complying with the Florida
Building Code
Acceptance No 15-1124.10
Expiration Date 12/09/2019
By
Miami Dade Product Control

AUG 04 2016

JAMAD AHMAD
LICENSE
No. 70592
STATE OF
FLORIDA
PROFESSIONAL ENGINEER

CORNER ASSEMBLY
& INTERNAL FRAMING

AL-FAROOQ CORPORATION
ENGINEERS & PRODUCT DEVELOPMENT
9360 SUNSET DRIVE, SUITE 220
MIAMI, FLORIDA 33173 (C.A.N. 3538)
TEL. (305) 264-8100 FAX. (305) 262-6978

COOLER\06-071C

SOLUTION XT ROOFTOP AIR HANDLING UNIT

YORK/JOHNSON CONTROLS INC.
15901 S.W. 29TH STREET, SUITE 801
MIRAMAR, FL. 33027
TEL. (954) 389-9675 FAX. (954) 389-9687

revisions:

no	date	by	description
A	07.06.07		MANUF. NAME REV.
B	03.03.09		NO CHANGE THIS SHEET
C	01.20.12		NO CHANGE THIS SHEET
E	08.22.15		NO CHANGE THIS SHEET

date: 08-03-06
scale: 1/4"=1-0"
dr. by: HAMID
chk. by:

drawing no.
06-07

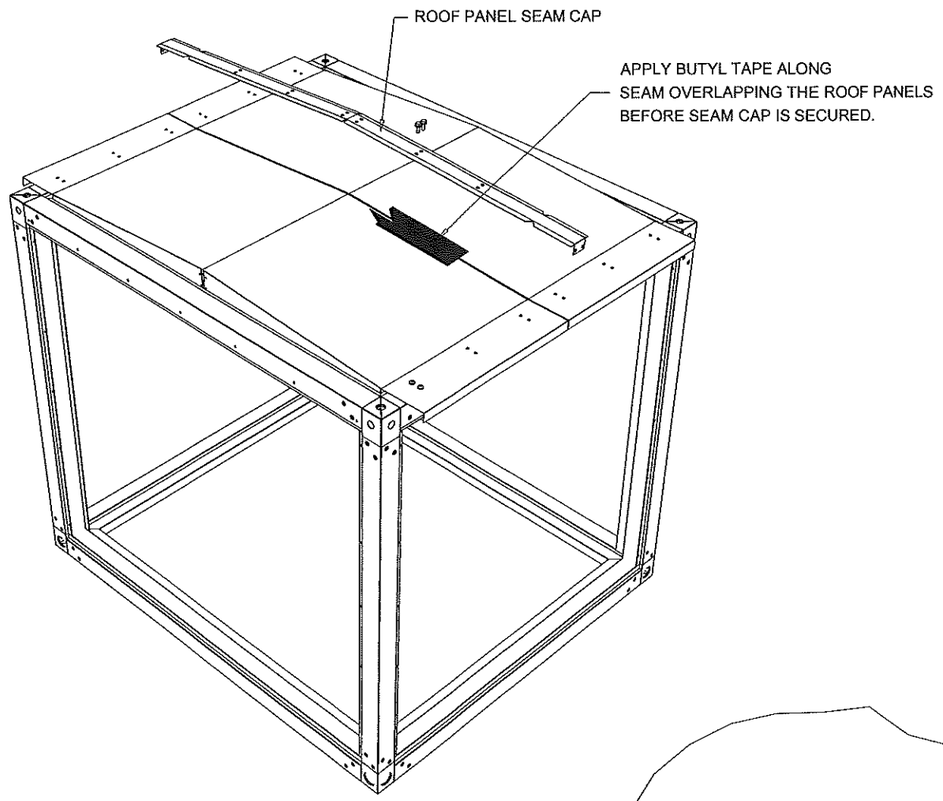

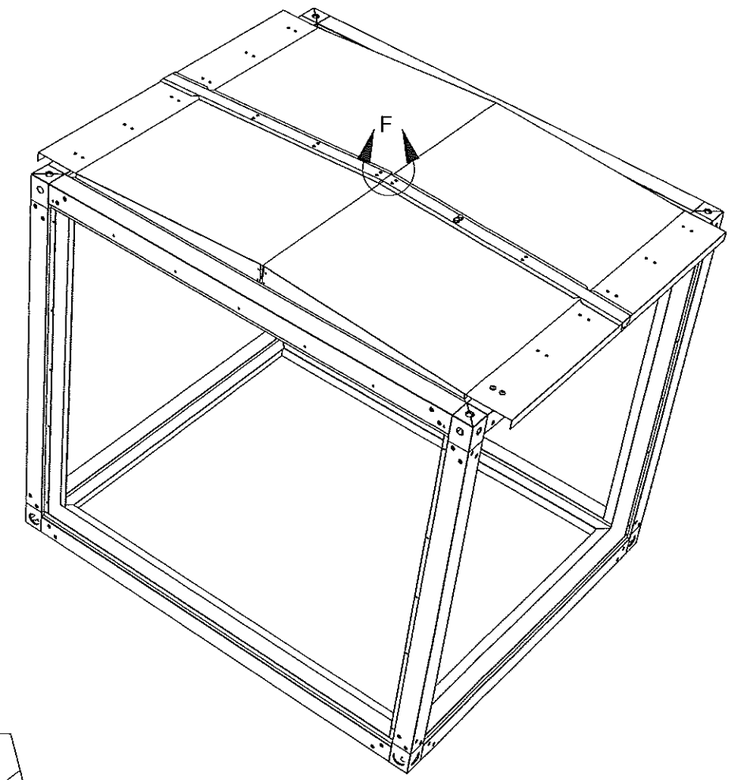

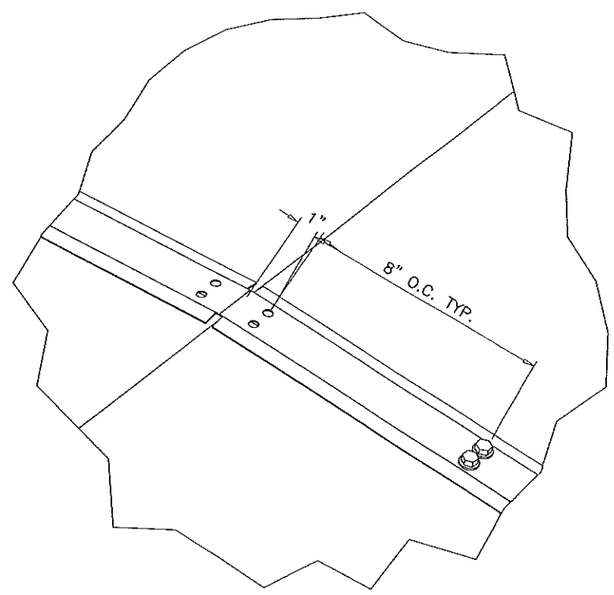

DETAIL F

AFTER BUTYL TAPE IS APPLIED AS SHOWN
ABOVE SECURE SEAM CAP AS SHOWN IN
DETAIL F WITH SCREW, TEK, EPDM, PLTD,0.25-14 X 1". ALONG TOP
AND INTO SIDE AS WELL.

STANDARD METAL THICKNESS		
METAL GAGE	MIN. THICKNESS	YIELD STRENGTH
	(IN.)	MINIMUM (KSI)
8	0.157	33.0
10	0.126	33.0
12	0.097	33.0
14	0.070	45.0
16	0.056	45.0
18	0.045	45.0
20	0.034	45.0

PRODUCT REVISED
as complying with the Florida
Building Code
Acceptance No 15-1124.10
Expiration Date 12/09/2019
By
Miami Dade Product Control

AUG 04 2016

JAVAD AHMAD
LICENSE
No. 70592
STATE OF
FLORIDA
PROFESSIONAL ENGINEER

ROOF SEAM
CAP ASSEMBLY
OPTION #1

AL-FAROOQ CORPORATION
ENGINEERS & PRODUCT DEVELOPMENT
9360 SUNSET DRIVE, SUITE 220
MIAMI, FLORIDA 33173 (C.A.N. 3538)
TEL. (305) 264-8100 FAX. (305) 262-6978

COOLER\06-071C

SOLUTION XT ROOFTOP AIR HANDLING UNIT

YORK/JOHNSON CONTROLS INC.
15901 S.W. 29TH STREET, SUITE 801
MIRAMAR, FL. 33027
TEL. (954) 389-9675 FAX. (954) 389-9687

revisions:

no	date	by	description
A	07.06.07		MANUF. NAME REV.
B	03.03.09		NO CHANGE THIS SHEET
C	01.20.12		NO CHANGE THIS SHEET
E	08.22.15		NO CHANGE THIS SHEET

date: 08-03-06
scale: 1/4"=1-0"
dr. by: HAMID
chk. by:

drawing no.
06-07

sheet 3 of 17

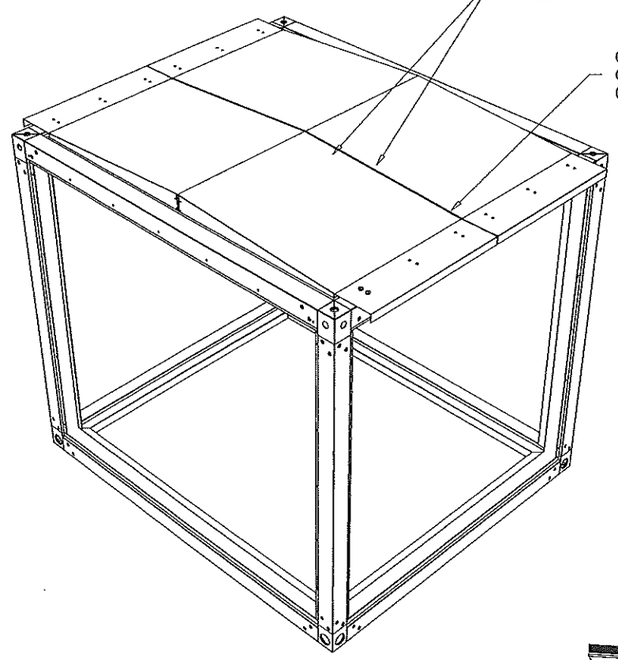

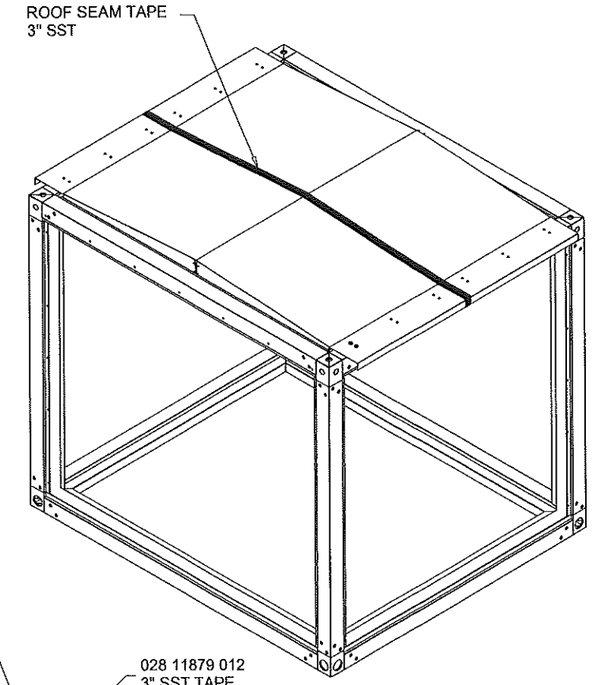

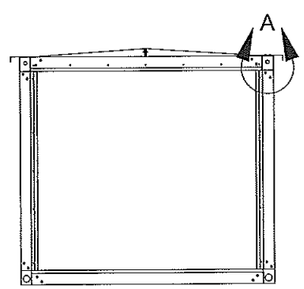

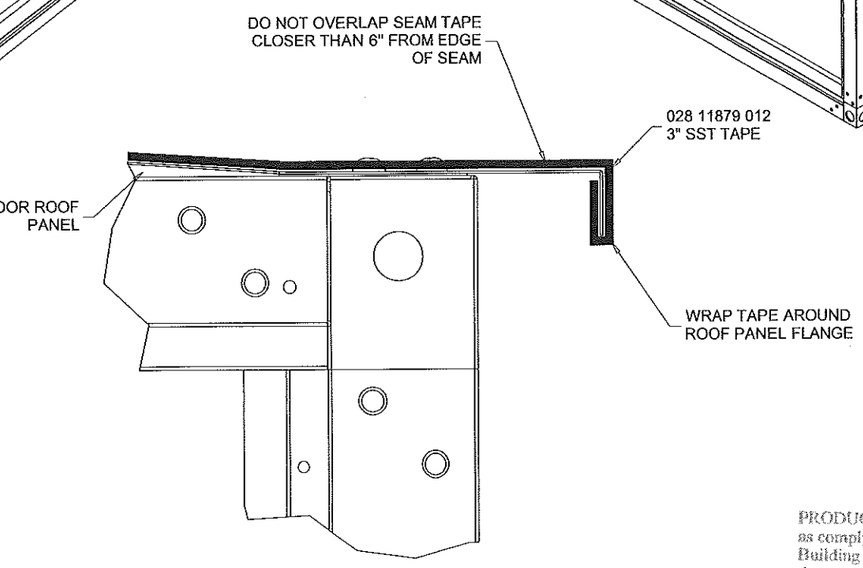

DETAIL A

STANDARD METAL THICKNESS		
METAL GAGE	MIN. THICKNESS	YIELD STRENGTH
	(IN.)	MINIMUM (KSI)
8	0.157	33.0
10	0.126	33.0
12	0.097	33.0
14	0.070	45.0
16	0.056	45.0
18	0.045	45.0
20	0.034	45.0

PRODUCT REVISED
as complying with the Florida
Building Code
Acceptance No 15-1124.10
Expiration Date 12/09/2019
By
Miami Dade Product Control

AUG 04 2016

JAVAD AHMAD
LICENSE
No. 70592
STATE OF FLORIDA
PROFESSIONAL ENGINEER

ROOF SEAM
TAPE ASSEMBLY
OPTION #2

AL-FAROOQ CORPORATION
ENGINEERS & PRODUCT DEVELOPMENT
9360 SUNSET DRIVE, SUITE 220
MIAMI, FLORIDA 33173 (C.A.N. 3538)
TEL. (305) 264-8100 FAX. (305) 262-6978

COOLER\06-07YIC

SOLUTION XT ROOFTOP AIR HANDLING UNIT

YORK/JOHNSON CONTROLS INC.
15901 S.W. 29TH STREET, SUITE 801
MIRAMAR, FL. 33027
TEL. (954) 389-9675 FAX. (954) 389-9687

revisions:

no	date	by	description
A	07.06.07		MANUF. NAME REV.
B	03.03.09		NO CHANGE THIS SHEET
C	01.20.12		NO CHANGE THIS SHEET
E	08.22.15		NO CHANGE THIS SHEET

date: 08-03-06
scale: -
dr. by: HAMID
chk. by:

drawing no.
06-07

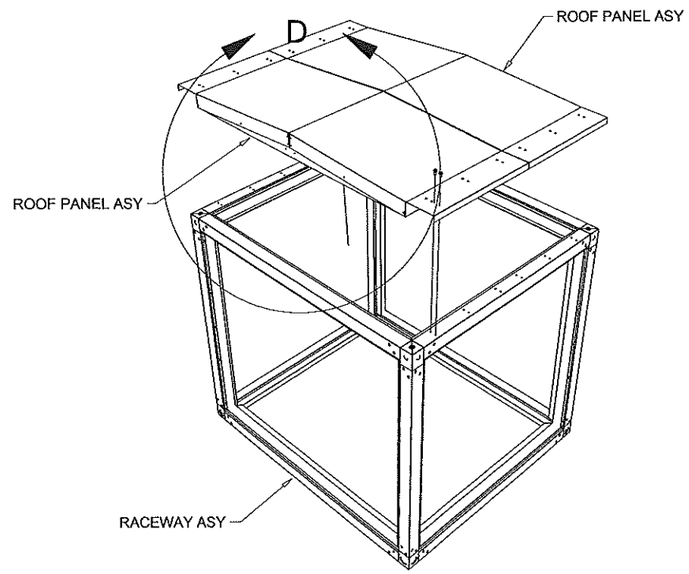

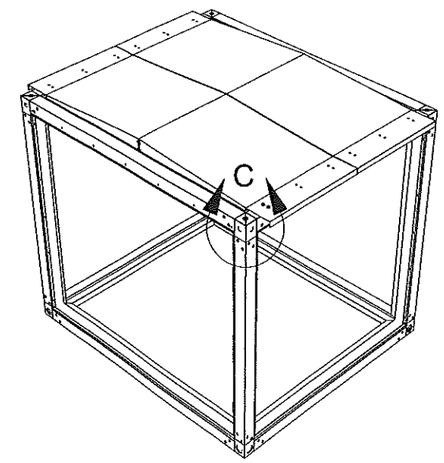

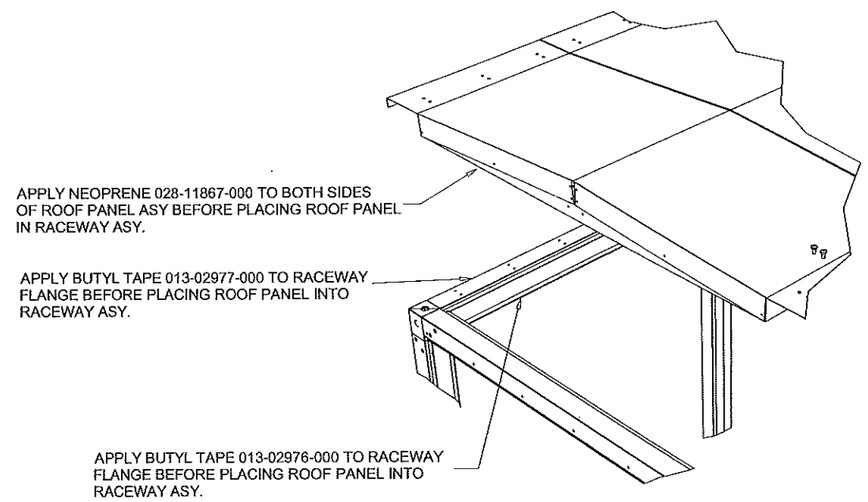

DETAIL D

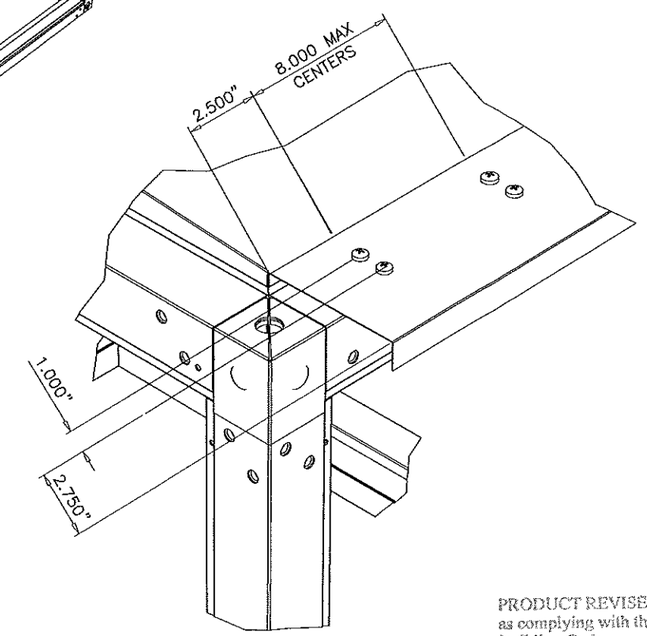

DETAIL C

PRODUCT REVISED
as complying with the Florida
Building Code
Acceptance No. 15-1124.10
Expiration Date 12/09/2019
By
Miami Dade Product Control

AFTER APPLYING NEOPRENE AND BUTYL TAPE AS SHOWN IN DETAIL D, PLACE ROOF PANEL INTO RACEWAY ASY AND SECURE AS SHOWN IN DETAIL C USING SCREW TAP TY A PH 14-10 1/4 X 3/4 PAN HEAD PHILLIPS (#1), TYPE A, ZINC PLATED

AUG 04 2016

JAMAD AHMAD
LICENSE
No. 70592
STATE OF FLORIDA
PROFESSIONAL ENGINEER

ROOF PANEL ASSEMBLY

AL-FAROOQ CORPORATION
ENGINEERS & PRODUCT DEVELOPMENT
9360 SUNSET DRIVE, SUITE 220
MIAMI, FLORIDA 33173 (C.A.N. 3538)
TEL. (305) 264-8100 FAX. (305) 262-6978

COOLER\06-07YIC

SOLUTION XT ROOFTOP AIR HANDLING UNIT

YORK/JOHNSON CONTROLS INC.
15901 S.W. 29TH STREET, SUITE 801
MIRAMAR, FL. 33027
TEL. (954) 389-9675 FAX. (954) 389-9687

revisions:

no	date	by	description
A	07.06.07		MANUF. NAME REV.
B	03.03.09		NO CHANGE THIS SHEET
C	01.20.12		NO CHANGE THIS SHEET
E	08.22.15		NO CHANGE THIS SHEET

date: 08-03-06
scale: 1/4"=1-0"
dr. by: HAMID
chk. by:

drawing no. 06-07

sheet 5 of 17

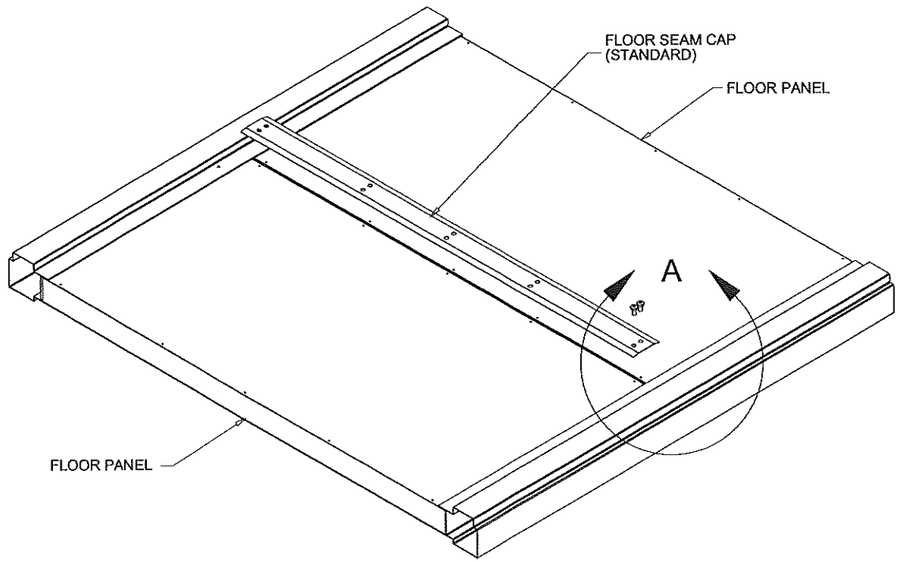

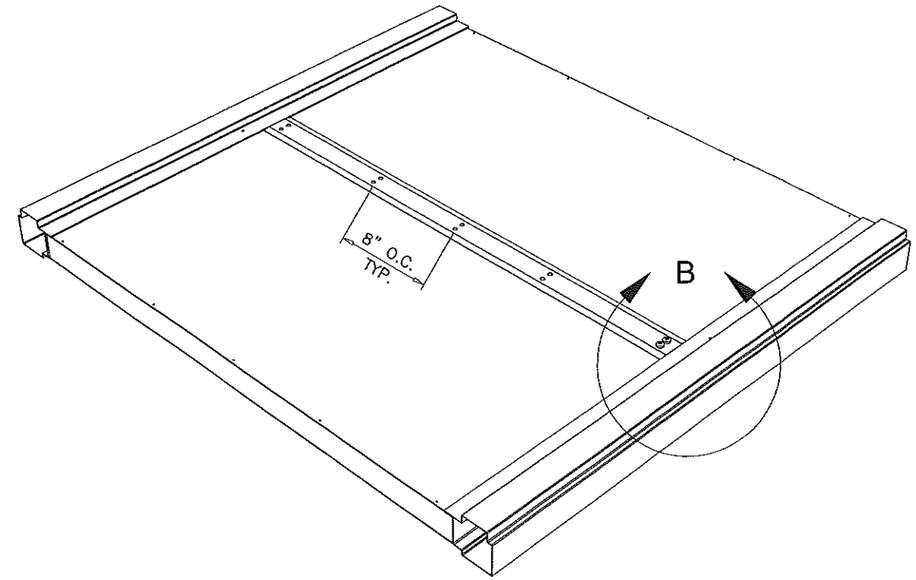

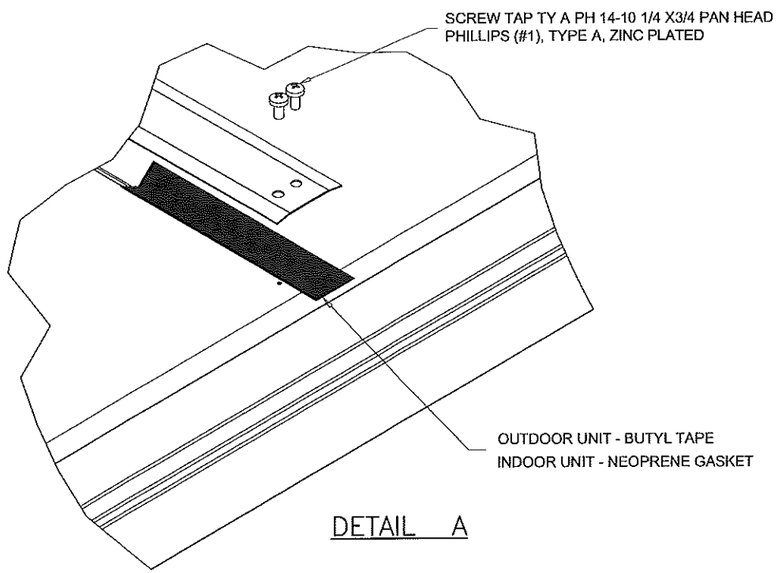

DETAIL A

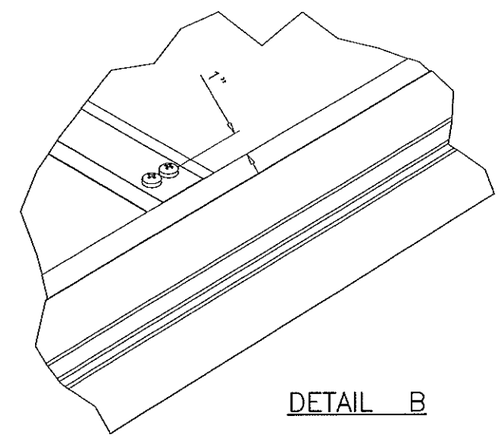

DETAIL B

STANDARD FLOOR PANEL SEAM CAP ASY
APPLY GASKET / BUTYL TAPE ALONG FLOOR PANEL SEAM BEFORE SECURING FLOOR PANEL SEAM CAP WITH SCREWS LISTED IN DETAIL A.

PRODUCT REVISED
as complying with the Florida Building Code
Acceptance No 15-1124.10
Expiration Date 12/09/2019
By
Miami Dade Product Control

AUG 04 2016

JAWAD AHMAD
LICENSE
No. 70592
STATE OF FLORIDA
PROFESSIONAL ENGINEER

FLOOR SEAM CAP
MOUNTING DETAIL
OPTION #1

AL-FAROOQ CORPORATION
ENGINEERS & PRODUCT DEVELOPMENT
9360 SUNSET DRIVE, SUITE 220
MIAMI, FLORIDA 33173 (C.A.N. 3538)
TEL. (305) 264-8100 FAX. (305) 262-6978

COOLER\06-07YIC

SOLUTION XT ROOFTOP AIR HANDLING UNIT

YORK/JOHNSON CONTROLS INC.
15901 S.W. 29TH STREET, SUITE 801
MIRAMAR, FL. 33027
TEL. (954) 389-9675 FAX. (954) 389-9687

revisions:

no	date	by	description
A	07.06.07		MANUF. NAME REV.
B	03.03.09		NO CHANGE THIS SHEET
C	01.20.12		NO CHANGE THIS SHEET
E	08.22.15		NO CHANGE THIS SHEET

date: 08-03-06
scale: 1/4"=1-0"
dr. by: HAMID
chk. by:

drawing no.
06-07

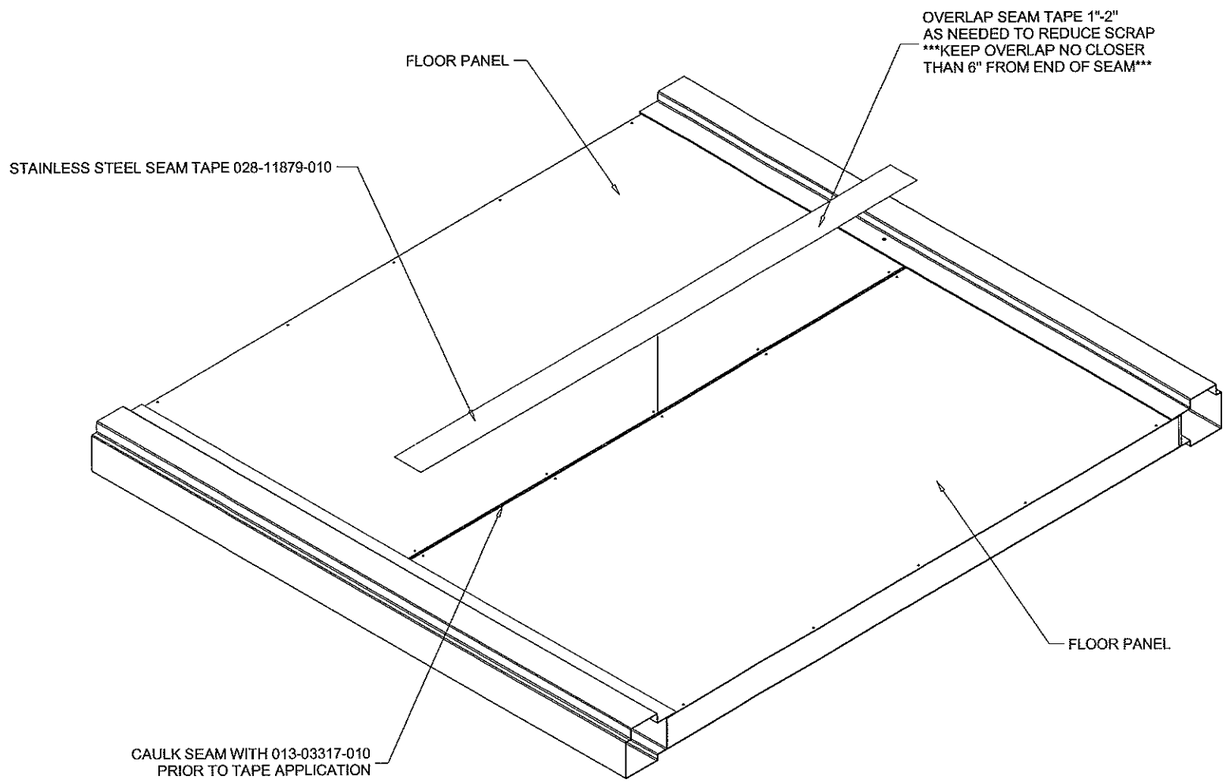

PRODUCT REVISED
as complying with the Florida
Building Code
Acceptance No 15-1124.10
Expiration Date 12/09/2019
By
Miami Dade Product Control

STANDARD FLOOR PANEL SEAM TAPE APPLICATION
THIS APPLIES FOR BOTH XTI & XTO UNITS.
CLEAN BOTH SIDES OF SEAM WITH 50% RUBBING
ALCHOHOL WATER MIX OR EQUAL. ALLOW TO DRY.
CAULK ALONG FLOOR PANEL SEAM.
APPLY SEAM TAPE EVENLY ALONG ENTIRE FLOOR
PANEL SEAM.

AUG 0 4 2016

JAVAD AHMAD
LICENSE
No. 70592
STATE OF
FLORIDA
PROFESSIONAL ENGINEER

FLOOR SEAM TAPE
ASSEMBLY
OPTION #2

AL-FAROOQ CORPORATION
ENGINEERS & PRODUCT DEVELOPMENT
9360 SUNSET DRIVE, SUITE 220
MIAMI, FLORIDA 33173 (C.A.N. 3538)
TEL. (305) 264-8100 FAX. (305) 262-6978

COOLER\06-07YIC

SOLUTION XT ROOFTOP AIR HANDLING UNIT

YORK/JOHNSON CONTROLS INC.
15901 S.W. 29TH STREET, SUITE 801
MIRAMAR, FL. 33027
TEL. (954) 389-9675 FAX. (954) 389-9687

revisions:

no	date	by	description
A	07.06.07		MANUF. NAME REV.
B	03.03.09		NO CHANGE THIS SHEET
C	01.20.12		NO CHANGE THIS SHEET
E	08.22.15		NO CHANGE THIS SHEET

date: 08-03-06
scale: –
dr. by: HAMID
chk. by:

drawing no.
06-07

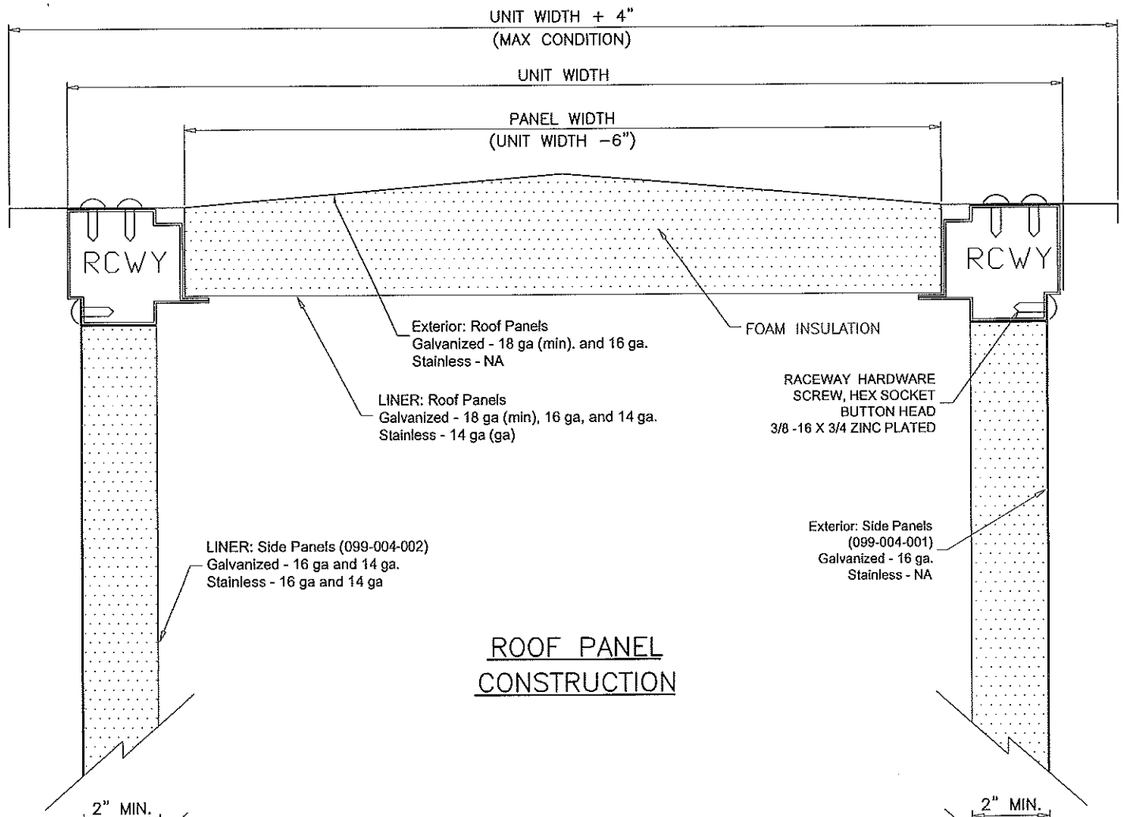

ROOF PANEL
CONSTRUCTION

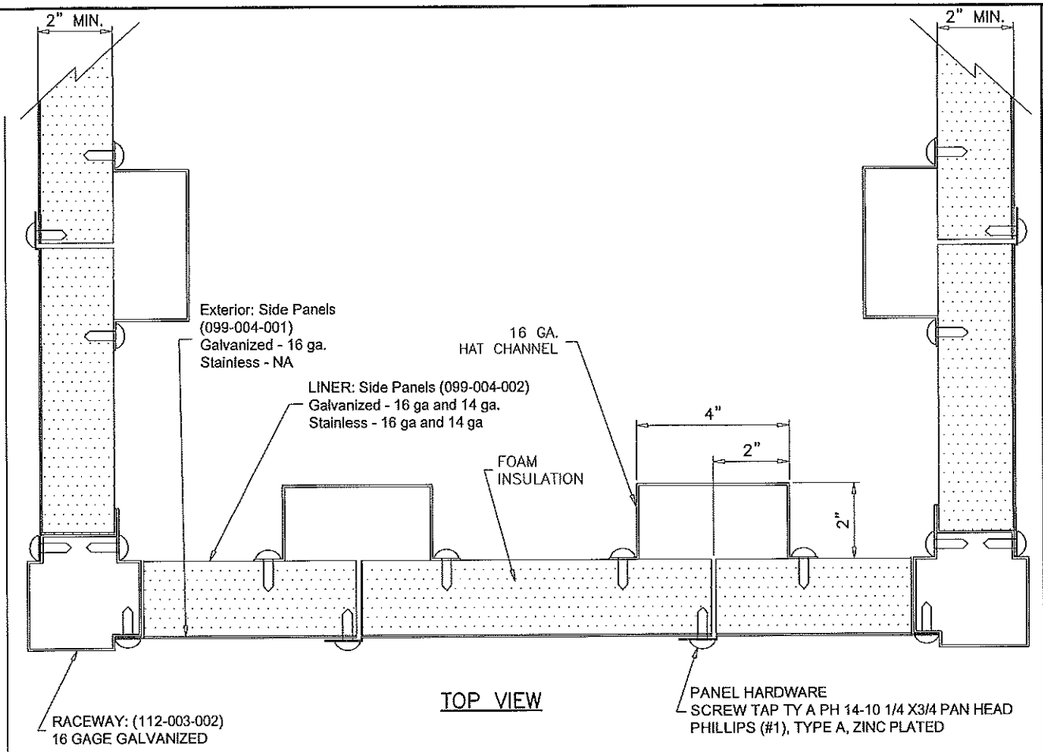

TOP VIEW

WALL PANEL
CROSS SECTION

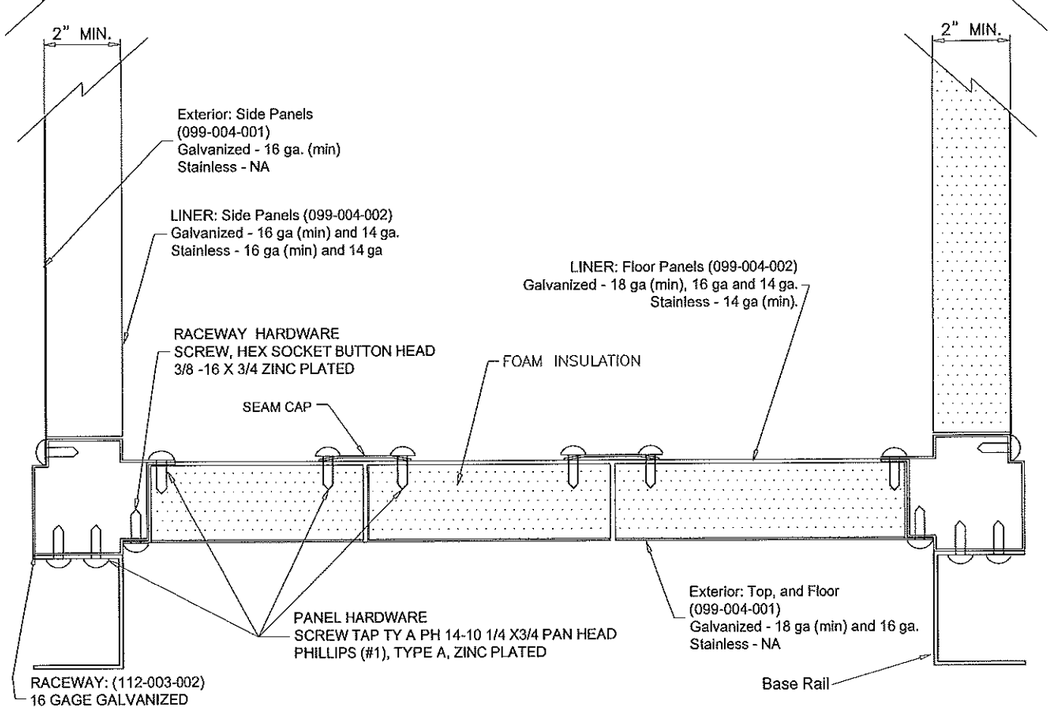

FLOOR PANEL
CONSTRUCTION

Notes:
1. Roof panels, floor panels, and wall panels are 2.00" thick double wall construction. Exterior roof and floor panel construction of 18 gage (min) galvanized steel and 16 gage (min) for wall panels. The interior liner shall be constructed of 18 gage (min) for roof and floor panels and 16 gage (min) for walls.

2. Access doors are 2.00" thick, double-wall construction, of galvanized sheet steel. The interior and exterior liner construction shall consist of 20 gage sheet steel. Additionally, an 18 gage exterior panel shall be secured to the access door with #14 x 3/4" self-tapping sheet metal screws.

3. Insulation is spray injected closed-cell foam.

PRODUCT REVISED
as complying with the Florida
Building Code
Acceptance No 15-1124.10
Expiration Date 12/09/2019
By
Miami Dade Product Control

AUG 04 2016

JAVAD AHMAD
LICENSE
No. 70592
STATE OF FLORIDA
PROFESSIONAL ENGINEER

AL-FAROOQ CORPORATION
ENGINEERS & PRODUCT DEVELOPMENT
9360 SUNSET DRIVE, SUITE 220
MIAMI, FLORIDA 33173 (C.A.N. 3538)
TEL. (305) 264-8100 FAX. (305) 262-6978

COOLER\06-071C

SOLUTION XT ROOFTOP AIR HANDLING UNIT

YORK/JOHNSON CONTROLS INC.
15901 S.W. 29TH STREET, SUITE 801
MIRAMAR, FL. 33027
TEL. (954) 389-9675 FAX. (954) 389-9687

revisions:

no	date	by	description
A	07.06.07		MANUF. NAME REV.
B	03.03.09		NO CHANGE THIS SHEET
C	01.20.12		NO CHANGE THIS SHEET
E	08.22.15		NO CHANGE THIS SHEET

date: 08-03-06
scale: 1/4" = 1"
dr. by: HAMID
chk. by:

drawing no.
06-07

A–A

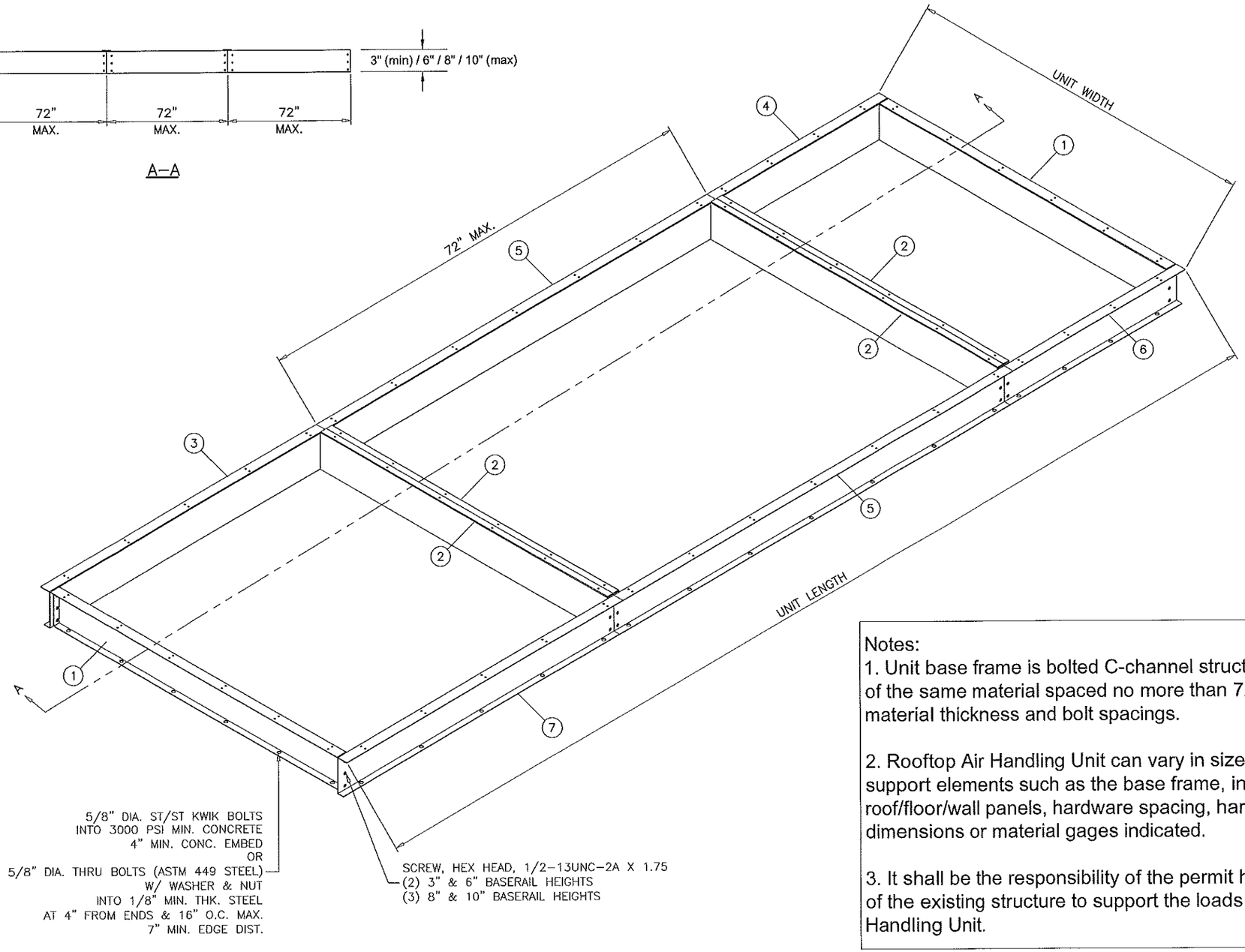

Notes:

1. Unit base frame is bolted C-channel structural steel with c-channel cross supports of the same material spaced no more than 72" apart. Refer to sheet 10 for material thickness and bolt spacings.

2. Rooftop Air Handling Unit can vary in size however, spacing of the structural support elements such as the base frame, internal hat channels, raceways, roof/floor/wall panels, hardware spacing, hardware sizes, shall not exceed the dimensions or material gages indicated.

3. It shall be the responsibility of the permit holder to verify the strucutal integrity of the existing structure to support the loads superimposed by the Rooftop Air Handling Unit.

NOTE:
VERIFY CABLE LOCATION BEFORE DRILLING
IF ROOF IS POST TENSION CONCRETE SLAB.

Parts List

ITEM	QTY	DESCRIPTION
1	2	BASERAIL END XTI GALV
2	4	BASERAIL INT XTI GALV
3	1	BASERAIL DOA FIA GALV
4	1	BASERAIL DOA LIA GALV
5	2	BASERAIL DOA MIA GALV
6	1	BASERAIL DOA FIA GALV
7	1	BASERAIL DOA LIA GALV

PRODUCT REVISED
as complying with the Florida
Building Code
Acceptance No 15-1124.10
Expiration Date 12/09/2019
By
Miami Dade Product Control

AUG 04 2016

JAVAD AHMAD
LICENSE
No. 70592
STATE OF FLORIDA
PROFESSIONAL ENGINEER

SOLUTION XT
BASERAIL ASSEMBLY

AL-FAROOQ CORPORATION
ENGINEERS & PRODUCT DEVELOPMENT
9360 SUNSET DRIVE, SUITE 220
MIAMI, FLORIDA 33173 (C.A.N. 3538)
TEL. (305) 264-8100 FAX. (305) 262-6978

COOLER\06–07YIC

SOLUTION XT ROOFTOP AIR HANDLING UNIT

YORK/JOHNSON CONTROLS INC.
15901 S.W. 29TH STREET, SUITE 801
MIRAMAR, FL. 33027
TEL. (954) 389-9675 FAX. (954) 389-9687

revisions:

no	date	by	description
A	07.06.07		MANUF. NAME REV.
B	03.03.09		NO CHANGE THIS SHEET
C	01.20.12		NO CHANGE THIS SHEET
E	08.22.15		UPDATED TO 2014 FBC

date: 08–03–06
scale: 1/4"=1–0"
dr. by: HAMID
chk. by:

drawing no.
06–07

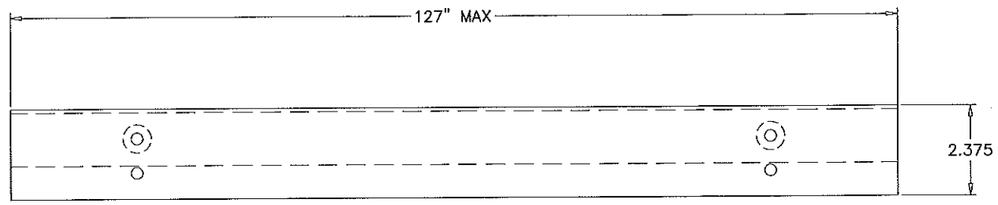

FORMED TOP VIEW

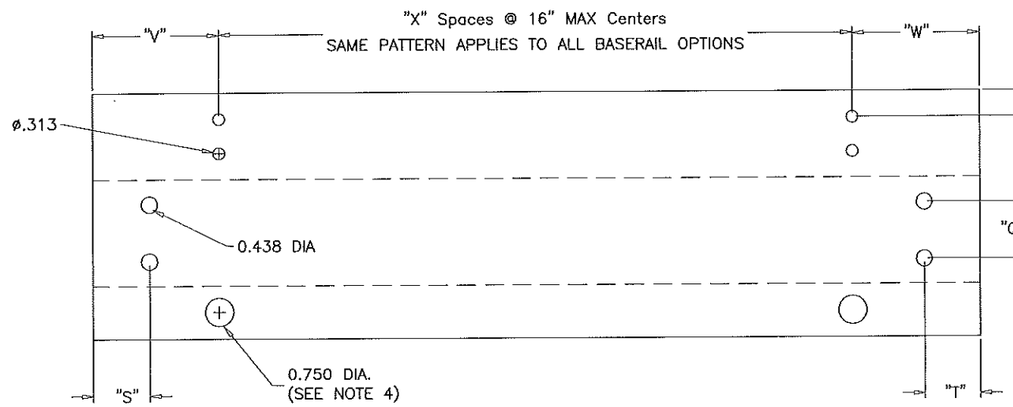

FLAT VIEW

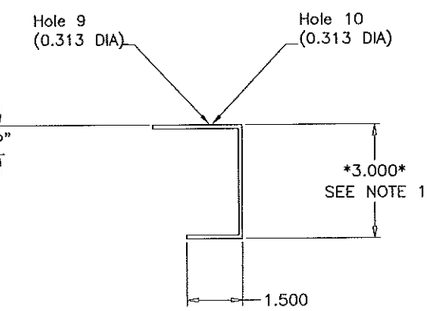

FORMED SIDE VIEW

5/8" DIA. HOLES USED WITH 1/4" SCREWS TO ATTACH
BASERAIL TO UNIT RACEWAY.
3/4" DIA. HOLES USED WITH 5/8" BOLTS TO ATTACH
BASERAIL TO DUNAGE STEEL OR CONC. SLAB.
SEE SHEET 11 FOR BASERAIL USED FOR ROOF CURB.

NOTES:

1) BASERAIL OPTION HEIGHTS 3",6",8",10"

2) HOLE SPACING BETWEEN FIRST AND LAST WILL VARY UPON BASERAIL LENGTH BUT CENTERS WILL NOT EXCEED 16" AS INDICATED BY "X" SPACES.

3) BASERAIL GAGES AS FOLLOWS – 3" = 12 GAGE GALV
6" = 10 GAGE GALV
8" = 10 GAGE GALV
10" = 8 GAGE GALV

4) 0.75" DIA. BASERAIL BOLT HOLE SHALL BE USE FOR ATTACHMENT TO THE ROOF TO PREVENT SLIDING AND OVERTURNING OF THE AIR HANDLING UNIT.

Baserail Height	"P"	"Q" SPACES	"R"	BASERAIL LOCATION	"S"	"T"	"V"	"W"
3	.875	1	1.250	LIA	.941	1.781	3.153	5.403
6	1.657	1	2.687	MIA	.941	.941	3.153	3.153
8	1.657	2	2.687	FIA	1.781	.941	5.403	3.153
10	1.657	2	2.687	FULL	1.781	1.781	5.403	5.403

PRODUCT REVISED
as complying with the Florida
Building Code
Acceptance No 15-1124.10
Expiration Date 12/09/2019
By
Miami Dade Product Control

AUG 04 2016

JAVAD AHMAD
LICENSE
No. 70592
STATE OF FLORIDA
PROFESSIONAL ENGINEER

BASERAIL
DIMENSIONS

AL-FAROOQ CORPORATION
ENGINEERS & PRODUCT DEVELOPMENT
9360 SUNSET DRIVE, SUITE 220
MIAMI, FLORIDA 33173 (C.A.N. 3538)
TEL. (305) 264-8100 FAX. (305) 262-6978

COOLER\06-07YIC

SOLUTION XT ROOFTOP AIR HANDLING UNIT

YORK/JOHNSON CONTROLS INC.
15901 S.W. 29TH STREET, SUITE 801
MIRAMAR, FL. 33027
TEL. (954) 389-9675 FAX. (954) 389-9687

revisions:

no	date	by	description
A	07.06.07		MANUF. NAME REV.
B	03.03.09		NO CHANGE THIS SHEET
C	01.20.12		NO CHANGE THIS SHEET
E	08.22.15		NO CHANGE THIS SHEET

date: 08-03-06
scale: 1/4" = 1"
dr. by: HAMID
chk. by:

drawing no.
06-07

CALCULATION CHART AND DATA			
VERTICAL HOLE DATA			
BASERAIL HEIGHT	"A"	"B" SPACES	"C"
6"	1.657	1	2.687
8"	1.657	2	2.687
10"	1.657	2	2.687

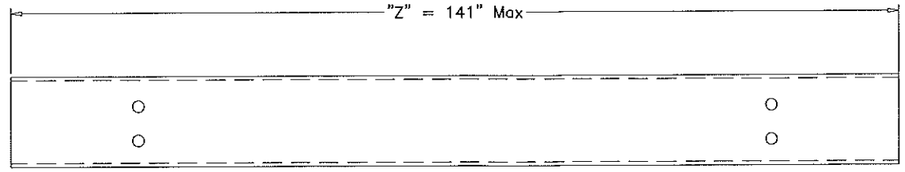

FORMED TOP VIEW

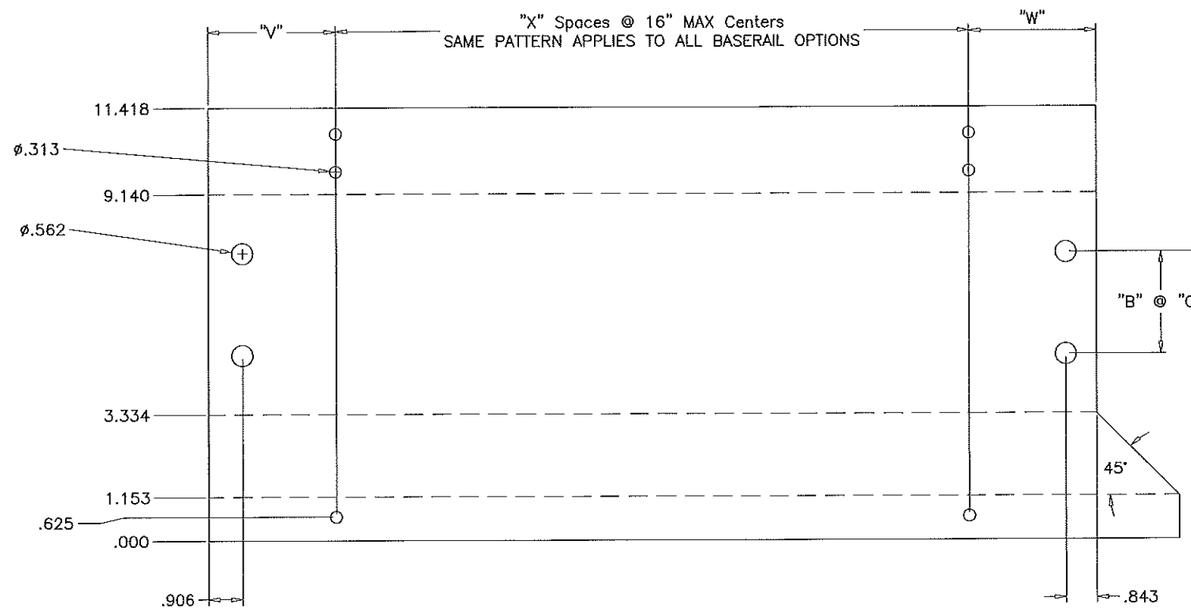

FLAT VIEW

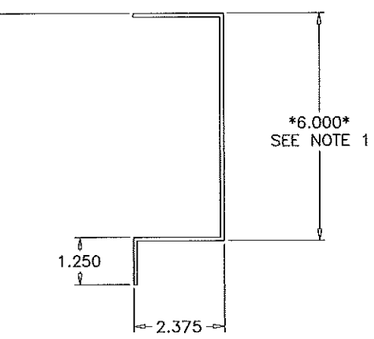

FORMED SIDE VIEW

NOTES:

1) BASERAIL OPTION HEIGHTS 6",8",10"

2) HOLE SPACING BETWEEN FIRST AND LAST WILL VARY UPON BASERAIL LENGTH BUT CENTERS WILL NOT EXCEED 16" AS INDICATED BY "X" SPACES.

3) BASERAIL GAGES AS FOLLOWS – 6" = 10 GAGE GALV
8" = 10 GAGE GALV
10" = 8 GAGE GALV

4) 0.75" DIA. BASERAIL BOLT HOLE SHALL BE USE FOR ATTACHMENT TO THE ROOF TO PREVENT SLIDING AND OVERTURNING OF THE AIR HANDLING UNIT.

Baserail Location		"V"	"W"	"Z"	"X"
FIA	"C"	3.153	3.028	=SUM OF SECTION LENGTHS + 3.063 (<=141")	=ROUNDUP((Z–V–W)/16")

BASERAIL
DIMENSIONS
FOR USE W/ ROOF CURB

AUG 04 2016

PRODUCT REVISED
as complying with the Florida
Building Code
Acceptance No 15-1124.10
Expiration Date 12/09/2019
By
Miami Dade Product Control

JAVAD AHMAD
LICENSE
No. 70592
STATE OF FLORIDA
PROFESSIONAL ENGINEER

AL-FAROOQ CORPORATION
ENGINEERS & PRODUCT DEVELOPMENT
9360 SUNSET DRIVE, SUITE 220
MIAMI, FLORIDA 33173 (C.A.N. 3538)
TEL. (305) 264-8100 FAX. (305) 262-6978

COOLER\06–07YIC

SOLUTION XT ROOFTOP AIR HANDLING UNIT

YORK/JOHNSON CONTROLS INC.
15901 S.W. 29TH STREET, SUITE 801
MIRAMAR, FL. 33027
TEL. (954) 389-9675 FAX. (954) 389-9687

revisions:

no	date	by	description
A	07.06.07		MANUF. NAME REV.
B	03.03.09		NO CHANGE THIS SHEET
C	01.20.12		NO CHANGE THIS SHEET
E	08.22.15		NO CHANGE THIS SHEET

date: 08–03–06
scale: 1/4" = 1"
dr. by: HAMID
chk. by:

drawing no.
06–07

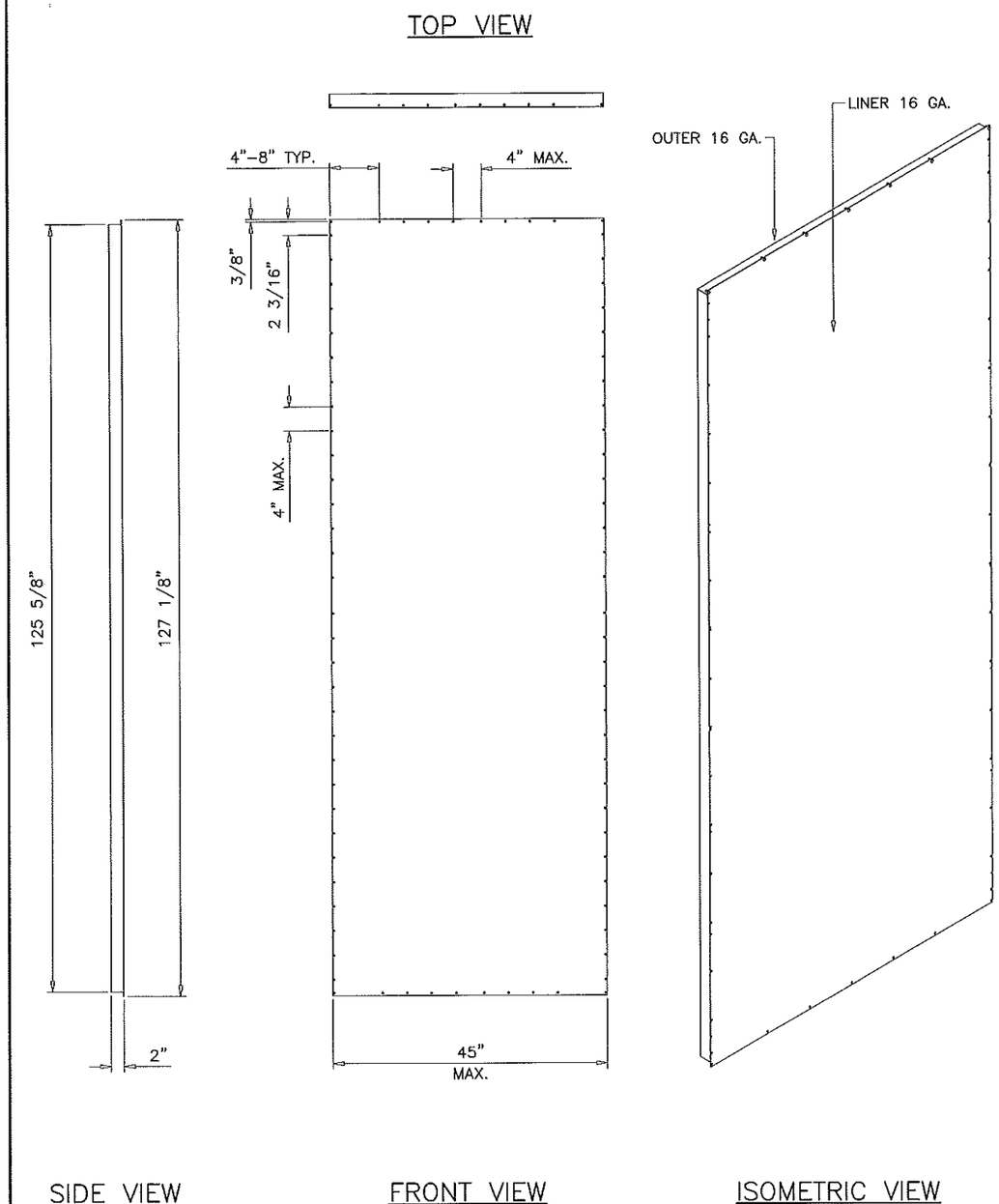

SOLUTION XT–45W
WALL PANEL ASSY.

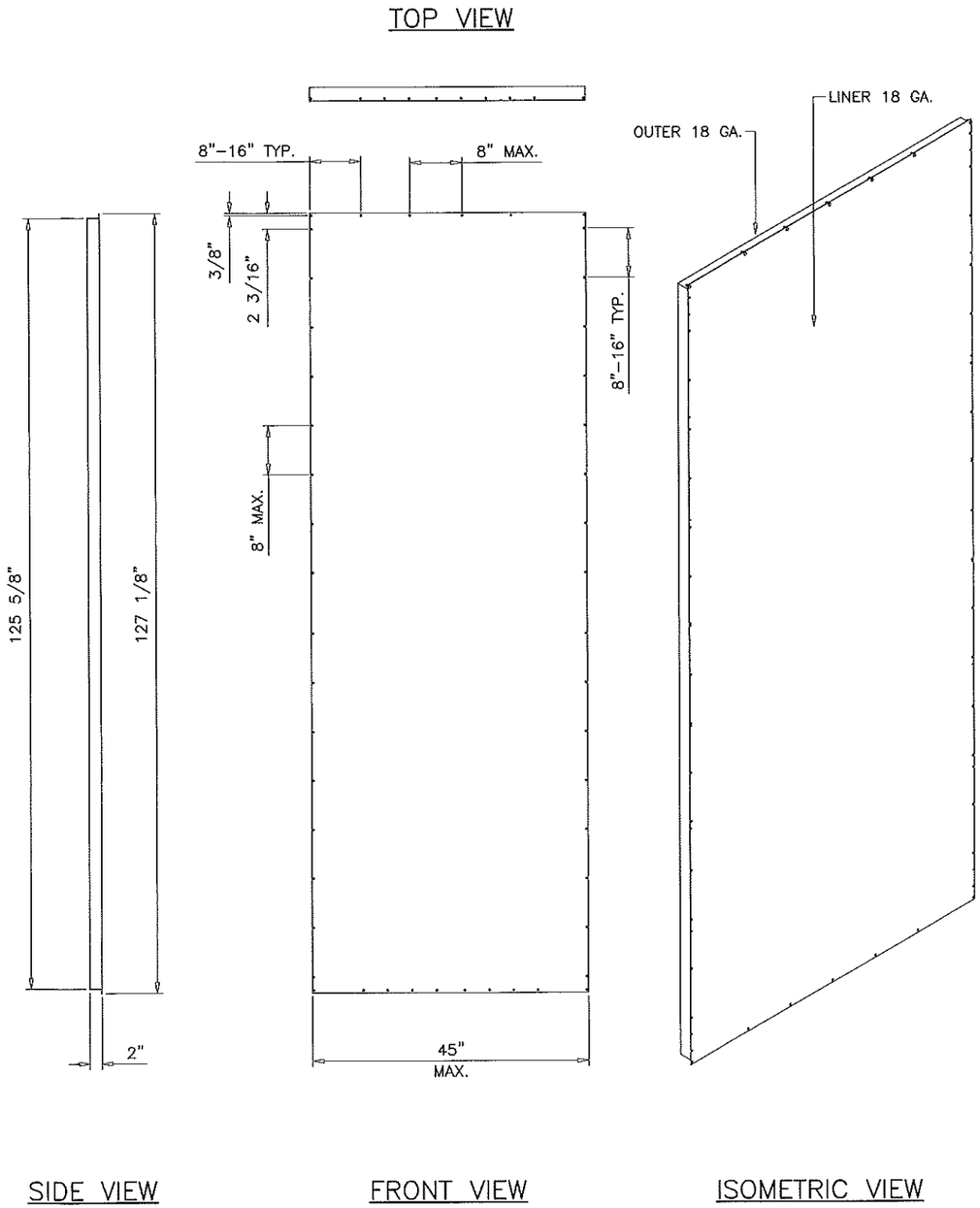

SOLUTION XT–45W
FLR/ROOF PANEL ASSY.

NOTE: SCREW SPACING AND LOCATIONS ARE INDICATED. REFER TO OTHER DRAWINGS FOR SCREW SIZES

AUG 04 2016

PRODUCT REVISED
as complying with the Florida
Building Code
Acceptance No 15-1124.10
Expiration Date 12/09/2019
By
Miami Dade Product Control

JAVAD AHMAD
LICENSE
No. 70592
STATE OF FLORIDA
PROFESSIONAL ENGINEER

AL-FAROOQ CORPORATION
ENGINEERS & PRODUCT DEVELOPMENT
9360 SUNSET DRIVE, SUITE 220
MIAMI, FLORIDA 33173 (C.A.N. 3538)
TEL. (305) 264-8100 FAX. (305) 262-6978

COOLER\06-07IC

SOLUTION XT ROOFTOP AIR HANDLING UNIT

YORK/JOHNSON CONTROLS INC.
15901 S.W. 29TH STREET, SUITE 801
MIRAMAR, FL. 33027
TEL. (954) 389-9675 FAX. (954) 389-9687

revisions:

no	date	by	description
A	07.06.07		MANUF. NAME REV.
B	03.03.09		NO CHANGE THIS SHEET
C	01.20.12		NO CHANGE THIS SHEET
E	08.22.15		NO CHANGE THIS SHEET

date: 08-03-06
scale: 1/2"=1-0"
dr. by: HAMID
chk. by:

drawing no.
06-07

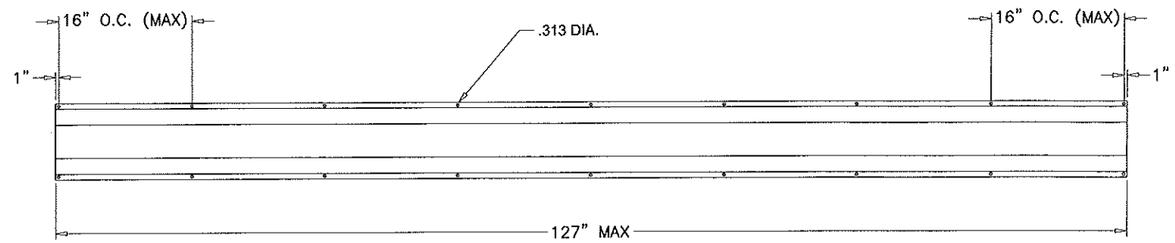

FLAT VIEW

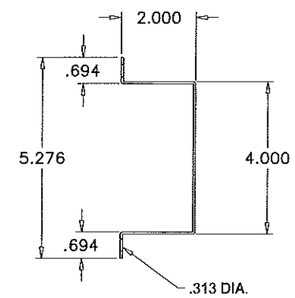

FORMED SIDE VIEW

NOTES:

1. Internal steel hat channel supports shall be 16 gage minimum thickness galvanized steel.

2. The maximum spacing for the internal supports shall be 36" O.C. and maximum length shall not exceed 127".

3. Hat channels shall be installed to unit #14 x 1" self-tapping panhead screws.

SIDE WALL SUPPORTS
SOLUTION XT–HAT CHANNEL

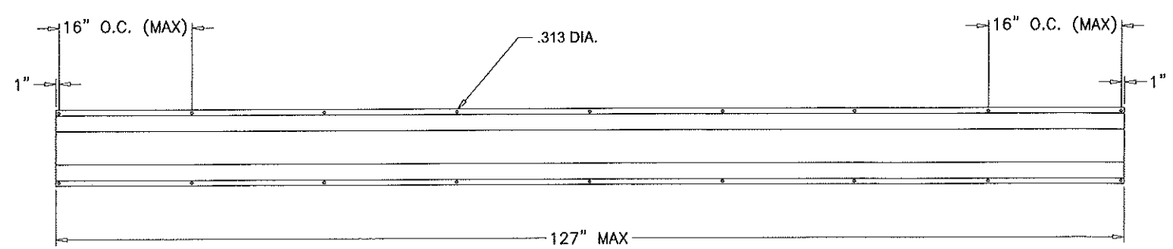

FLAT VIEW

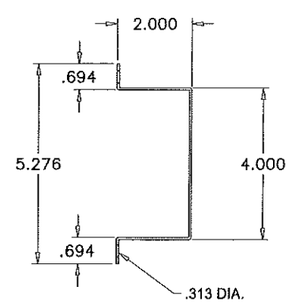

FORMED SIDE VIEW

NOTES:

1. Internal steel hat channel supports shall be 12 gage minimum thickness galvanized steel.

2. The maximum spacing for the internal supports shall be 37" O.C. and maximum length shall not exceed 127".

3. Hat channels shall be installed to unit #14 x 1" self-tapping panhead screws.

END WALL SUPPORTS
SOLUTION XT–HAT CHANNEL

PRODUCT REVISED
as complying with the Florida
Building Code
Acceptance No 15-1124.10
Expiration Date 12/09/2019
By
Miami Dade Product Control

JAWAD AHMAD
LICENSE
No. 70592
2016
STATE OF FLORIDA
PROFESSIONAL ENGINEER

AL-FAROOQ CORPORATION
ENGINEERS & PRODUCT DEVELOPMENT
9360 SUNSET DRIVE, SUITE 220
MIAMI, FLORIDA 33173 (C.A.N. 3538)
TEL. (305) 264-8100 FAX. (305) 262-6978

COOLER\06-07YIC

SOLUTION XT ROOFTOP AIR HANDLING UNIT

YORK/JOHNSON CONTROLS INC.
15901 S.W. 29TH STREET, SUITE 801
MIRAMAR, FL. 33027
TEL. (954) 389-9675 FAX. (954) 389-9687

revisions:

no	date	by	description
A	07.06.07		MANUF. NAME REV.
B	03.03.09		NO CHANGE THIS SHEET
C	01.20.12		NO CHANGE THIS SHEET
E	08.22.15		NO CHANGE THIS SHEET

date: 08-03-06
scale: 1/4" = 1"
dr. by: HAMID
chk. by:

drawing no.
06-07

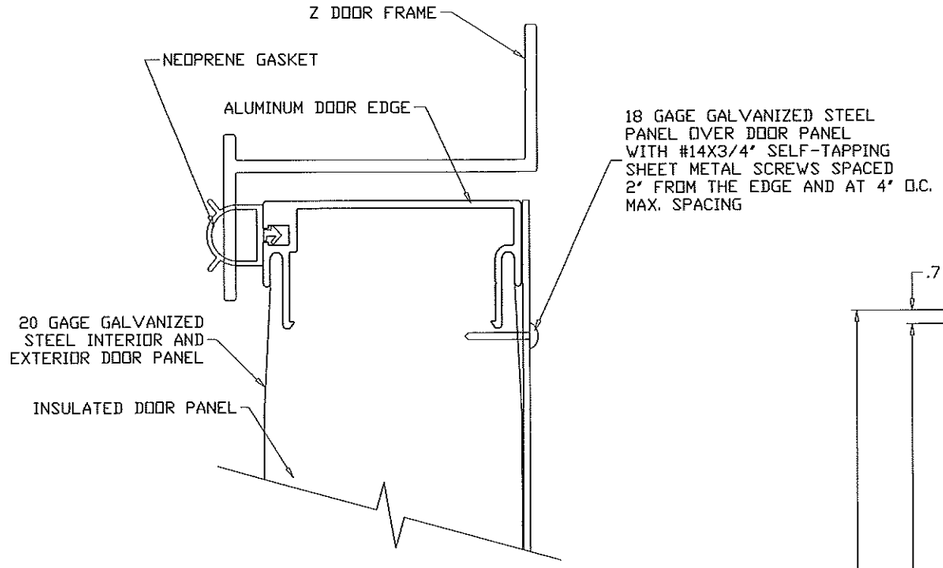

ENLARGED DOOR EDGE DETAIL

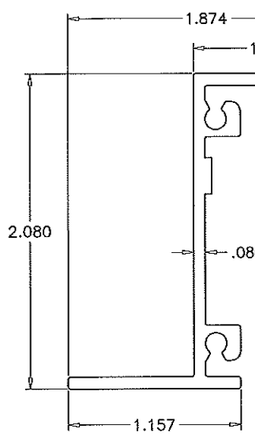

NON THERMAL VERTICAL Z FRAME

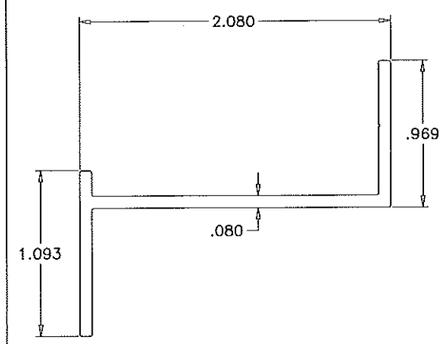

NON THERMAL HORIZONTAL Z FRAME

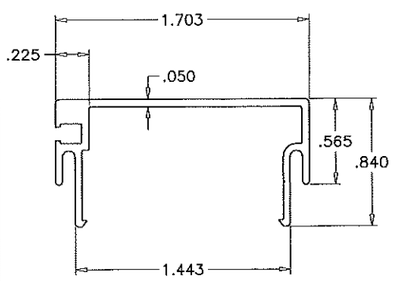

NON THERMAL DOOR PANEL EDGE EXTRUSION

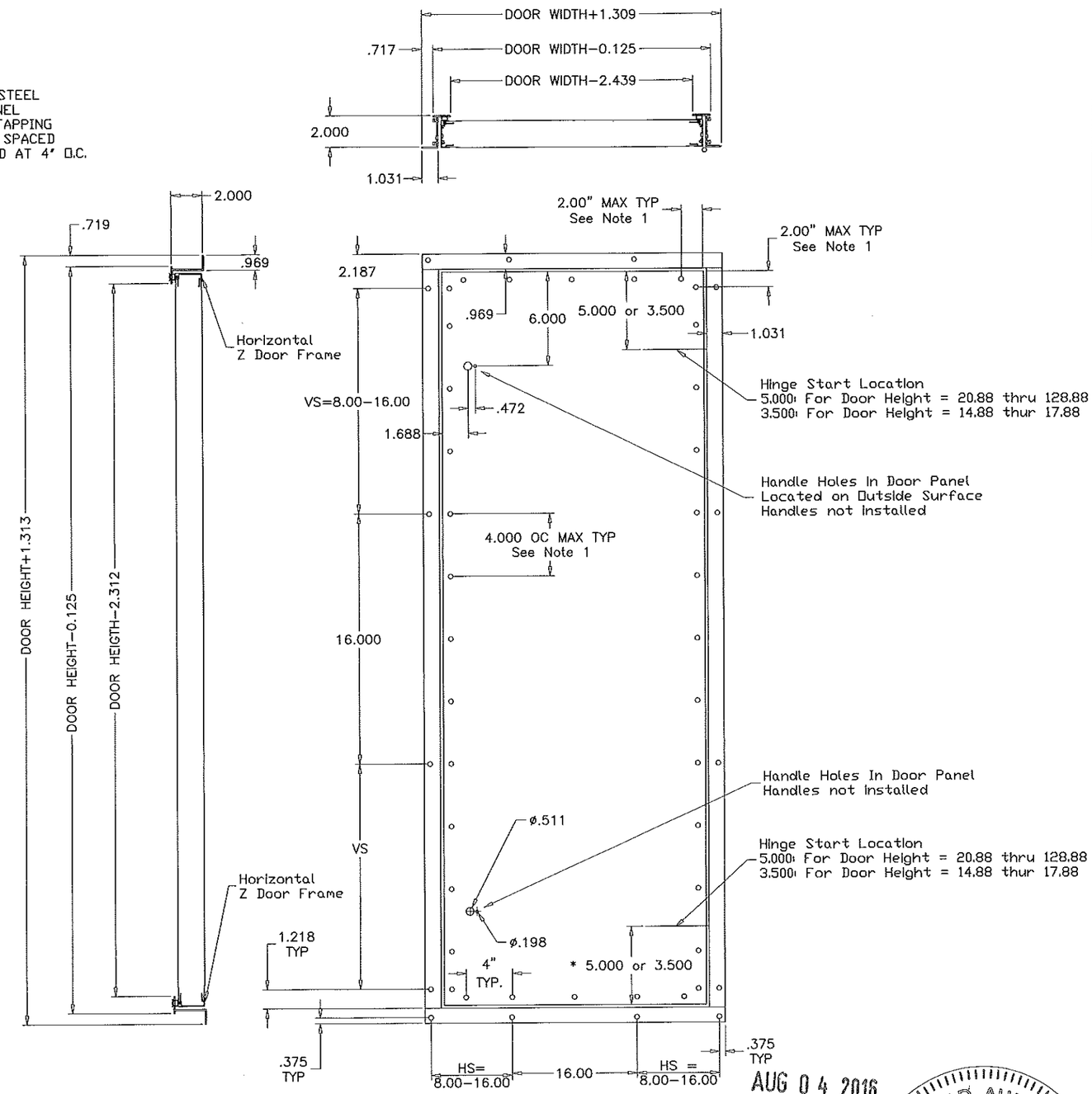

NOTES:
UNIT DOOR HEIGHT = UNIT HEIGHT - 6.125
PIPE CHASE DOOR HEIGTH = UNIT HEIGHT - 3.125

NOTE:
1. Access doors are 2.00" thick, double-wall construction of galvanized sheet steel. The interior and exterior liner construction shall conssit of 20 gage sheet steel. Additionally, an 18 gage steel exterior panel shall be secred to the access door with #14 x 3/4" self-tapping sheet metal screws spaced 2" from the edge and at 4" O.C.

SOLUTION XT ACCESS DOOR OPTION #1

AUG 0 4 2016

PRODUCT REVISED
as complying with the Florida Building Code
Acceptance No 15-1124.10
Expiration Date 12/09/2019
By
Miami Dade Product Control

JAVAD AHMAD
LICENSE
No. 70592
STATE OF FLORIDA
PROFESSIONAL ENGINEER

AL-FAROOQ CORPORATION
ENGINEERS & PRODUCT DEVELOPMENT
9360 SUNSET DRIVE, SUITE 220
MIAMI, FLORIDA 33173 (C.A.N. 3538)
TEL. (305) 264-8100 FAX. (305) 262-6978

COOLER\06-071C

SOLUTION XT ROOFTOP AIR HANDLING UNIT

YORK/JOHNSON CONTROLS INC.
15901 S.W. 29TH STREET, SUITE 801
MIRAMAR, FL. 33027
TEL. (954) 389-9675 FAX. (954) 389-9687

revisions:

no	date	by	description
A	07.06.07		MANUF. NAME REV.
B	03.03.09		NO CHANGE THIS SHEET
C	01.20.12		NO CHANGE THIS SHEET
E	08.22.15		NO CHANGE THIS SHEET

date: 08-03-06
scale: 1/8" = 1"
dr. by: HAMID
chk. by:

drawing no. 06-07

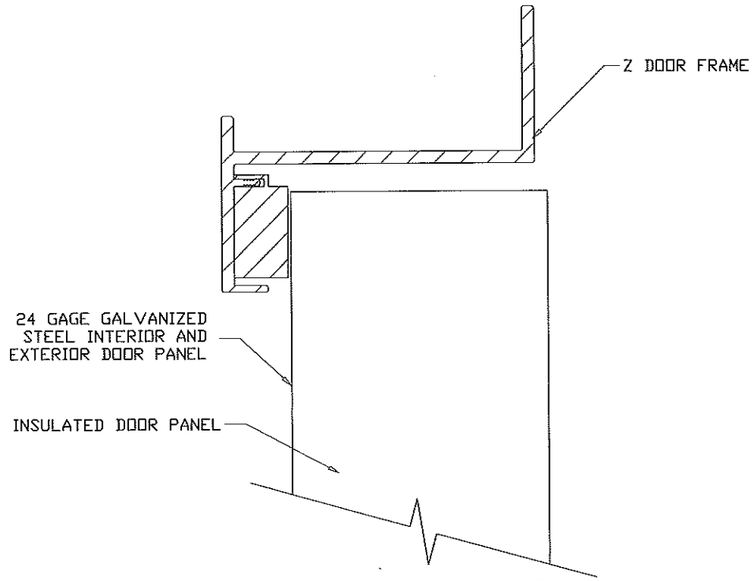

ENLARGED DOOR EDGE DETAIL

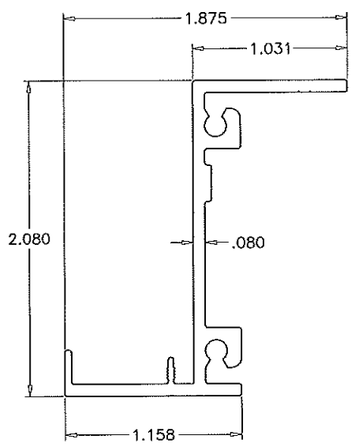

NON THERMAL VERTICAL Z FRAME

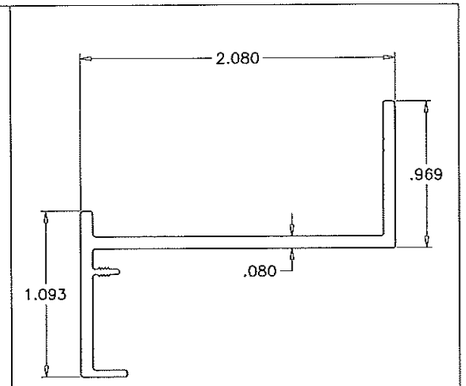

NON THERMAL HORIZONTAL Z FRAME

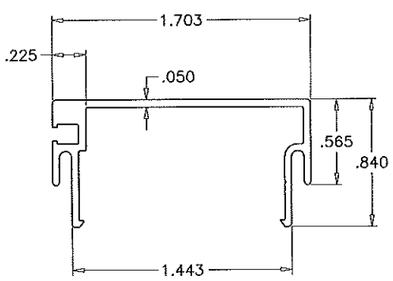

NON THERMAL DOOR PANEL EDGE EXTRUSION

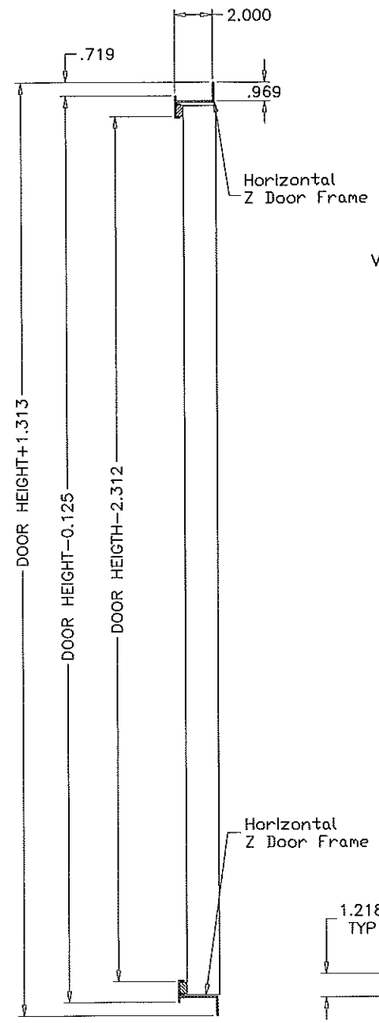

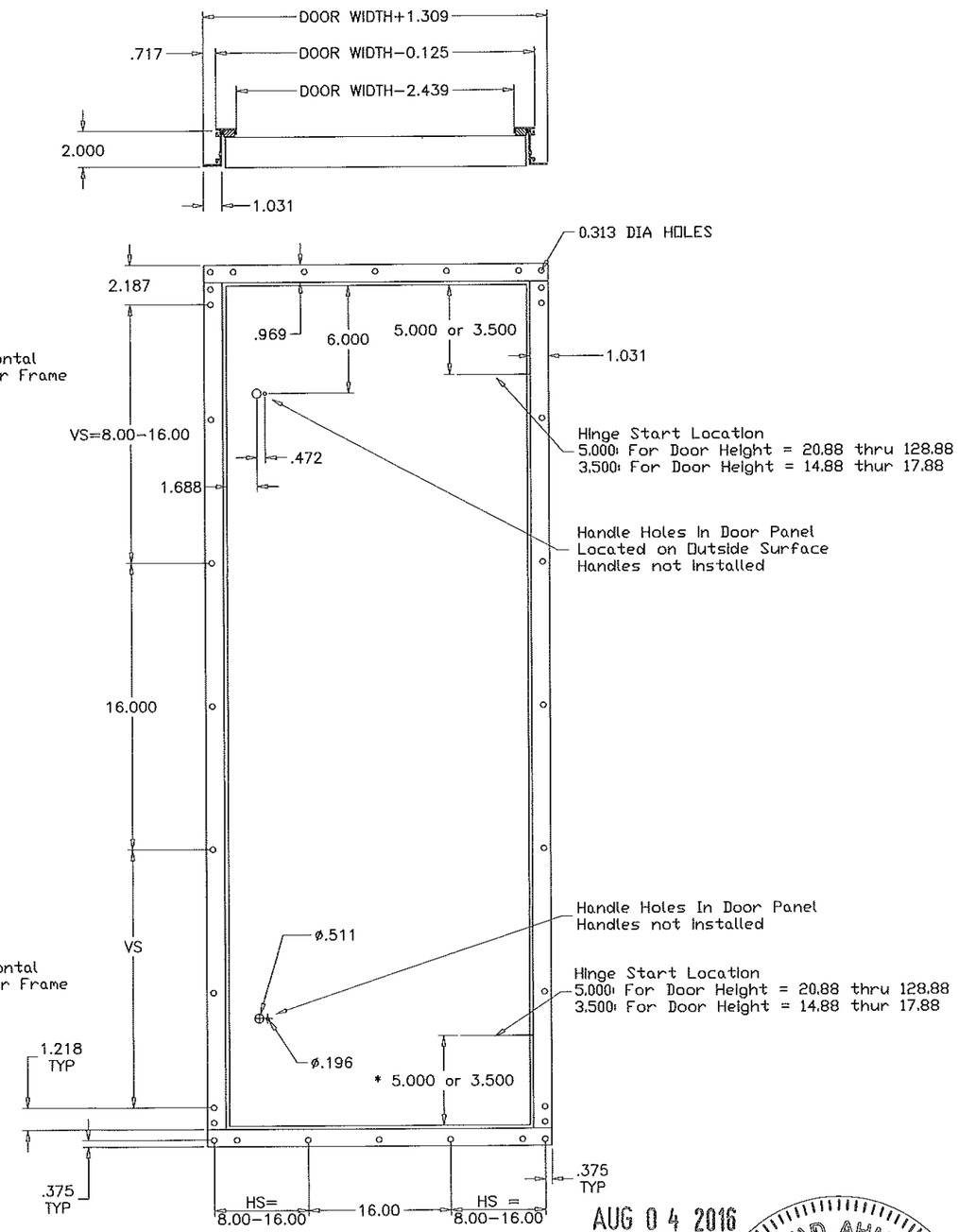

NOTES:
UNIT DOOR HEIGHT = UNIT HEIGHT − 6.125
PIPE CHASE DOOR HEIGTH = UNIT HEIGHT − 3.125

NOTE:
1. Access doors are 2.00" thick, double-wall construction of galvanized sheet steel. The interior and exterior liner construction shall conssit of 24 gage sheet steel.
2. View area not available on Doors used for NOA consursted units.
3. Door must show no water leakage at 6.0" W.C and no air leakage at negative 8.0" W.C

SOLUTION XT ACCESS DOOR OPTION #2

AUG 0 4 2016

PRODUCT REVISED
as complying with the Florida Building Code
Acceptance No 15-1124.10
Expiration Date 12/09/2019
By
Miami Dade Product Control

JAVAD AHMAD
LICENSE
No. 70592
STATE OF FLORIDA
PROFESSIONAL ENGINEER

AL-FAROOQ CORPORATION
ENGINEERS & PRODUCT DEVELOPMENT
9360 SUNSET DRIVE, SUITE 220
MIAMI, FLORIDA 33173 (C.A.N. 3538)
TEL. (305) 264-8100 FAX. (305) 262-6978

COOLER\06-071C

SOLUTION XT ROOFTOP AIR HANDLING UNIT

YORK/JOHNSON CONTROLS INC.
15901 S.W. 29TH STREET, SUITE 801
MIRAMAR, FL. 33027
TEL. (954) 389-9675 FAX. (954) 389-9687

revisions:

no	date	by	description
A	07.06.07		MANUF. NAME REV.
B	03.03.09		NO CHANGE THIS SHEET
C	01.20.12		NO CHANGE THIS SHEET
E	08.22.15		NO CHANGE THIS SHEET

date: 08-03-06
scale: 1/8" = 1"
dr. by: HAMID
chk. by:

drawing no. 06-07

sheet 15 of 17

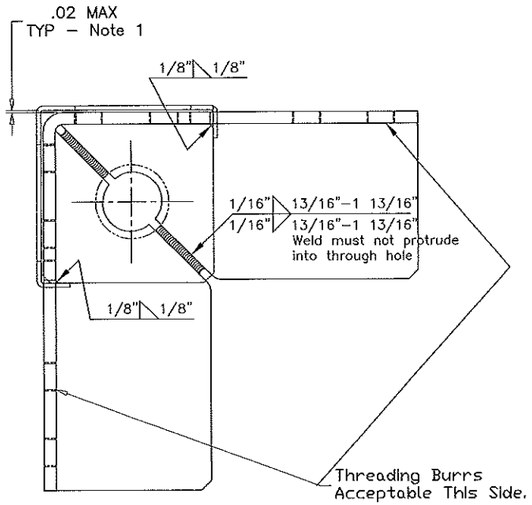

TOP VIEW

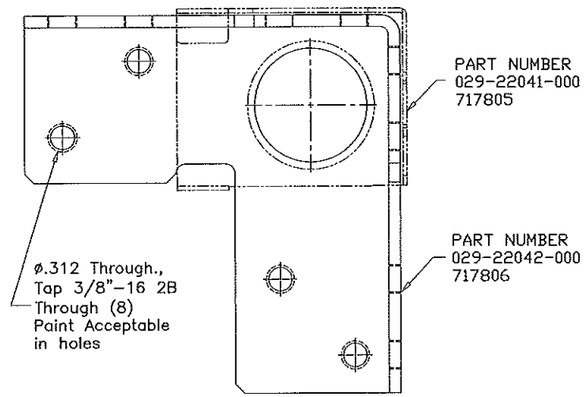

EXTERIOR SIDE VIEW

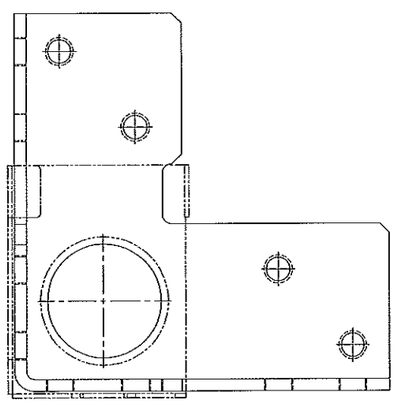

INTERIOR SIDE VIEW

Notes:

1) Gap can not accept 1/2" wide feeler stock.

2) Finish - Annodized Silver Powder Coat Paint.

3) Sub-component dimensions are prior to paint.

4) 8 gage stamped and formed galvanized steel corner

CORNER CONNECTOR DETAIL

1/2" = 1"

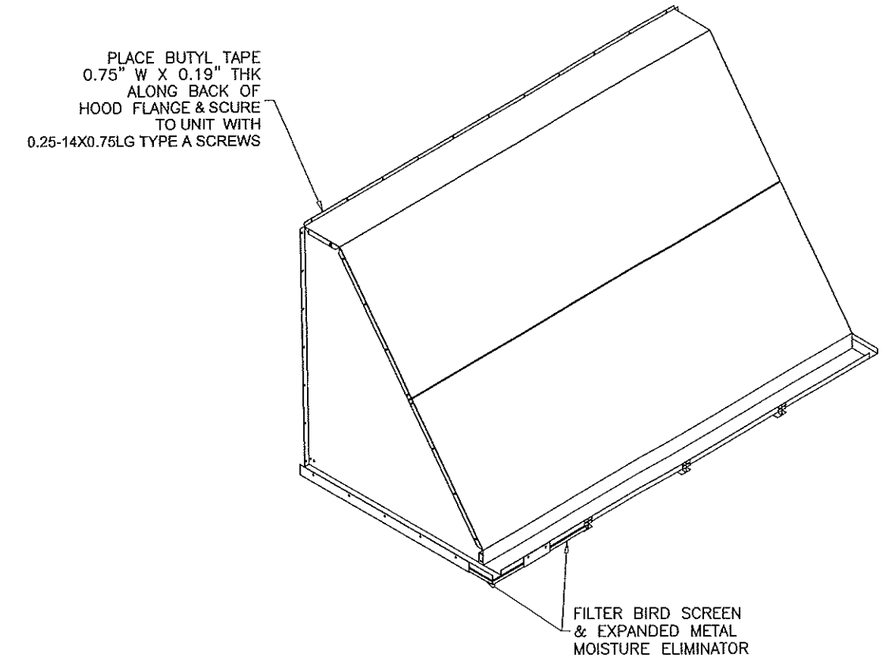

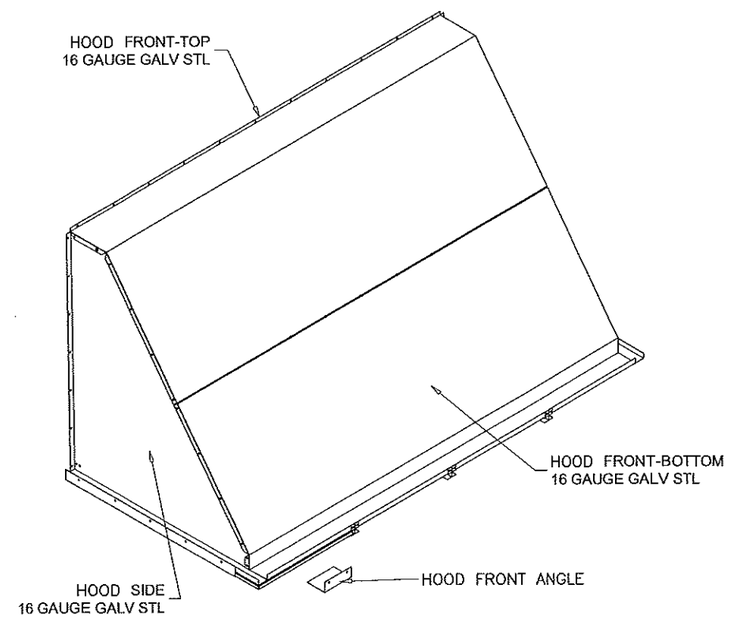

OUTDOOR AIR HOOD ASSEMBLY

1/2" = 1'-0"

AUG 0 4 2016

PRODUCT REVISED
as complying with the Florida
Building Code
Acceptance No 15-1124.10
Expiration Date 12/09/2019
By
Miami Dade Product Control

JAVAD AHMAD
LICENSE
No. 70592
STATE OF FLORIDA
PROFESSIONAL ENGINEER

AL-FAROOQ CORPORATION
ENGINEERS & PRODUCT DEVELOPMENT
9360 SUNSET DRIVE, SUITE 220
MIAMI, FLORIDA 33173 (C.A.N. 3598)
TEL. (305) 264-8100 FAX. (305) 262-6978

COOLER\06-07YIC

SOLUTION XT ROOFTOP AIR HANDLING UNIT

YORK/JOHNSON CONTROLS INC.
15901 S.W. 29TH STREET, SUITE 801
MIRAMAR, FL. 33027
TEL. (954) 389-9675 FAX. (954) 389-9687

revisions:

no	date	by	description
A	07.06.07		MANUF. NAME REV.
B	03.03.09		NO CHANGE THIS SHEET
C	01.20.12		NO CHANGE THIS SHEET
E	08.22.15		NO CHANGE THIS SHEET

date: 08-03-06
scale: –
dr. by: HAMID
chk. by:

drawing no.
06-07

sheet 16 of 17

PARTS LIST			
ITEM	DRAWING NO.	ITEM DESCRIPTION	QTY.
1	207931	ENCLOSURE ASSEMBLY	1
2	207935	ENCLOSURE TOP CAP	1
3	207936	UNIT VENT PLATE	1
4	207937	BASE PANEL	1
5	207938	ENCLOSURE DOOR	1
6	207942	MOUNTING RAIL	2
7	207943	SUN SHIELD (DOOR)	1
8	207827	GRILLE	1

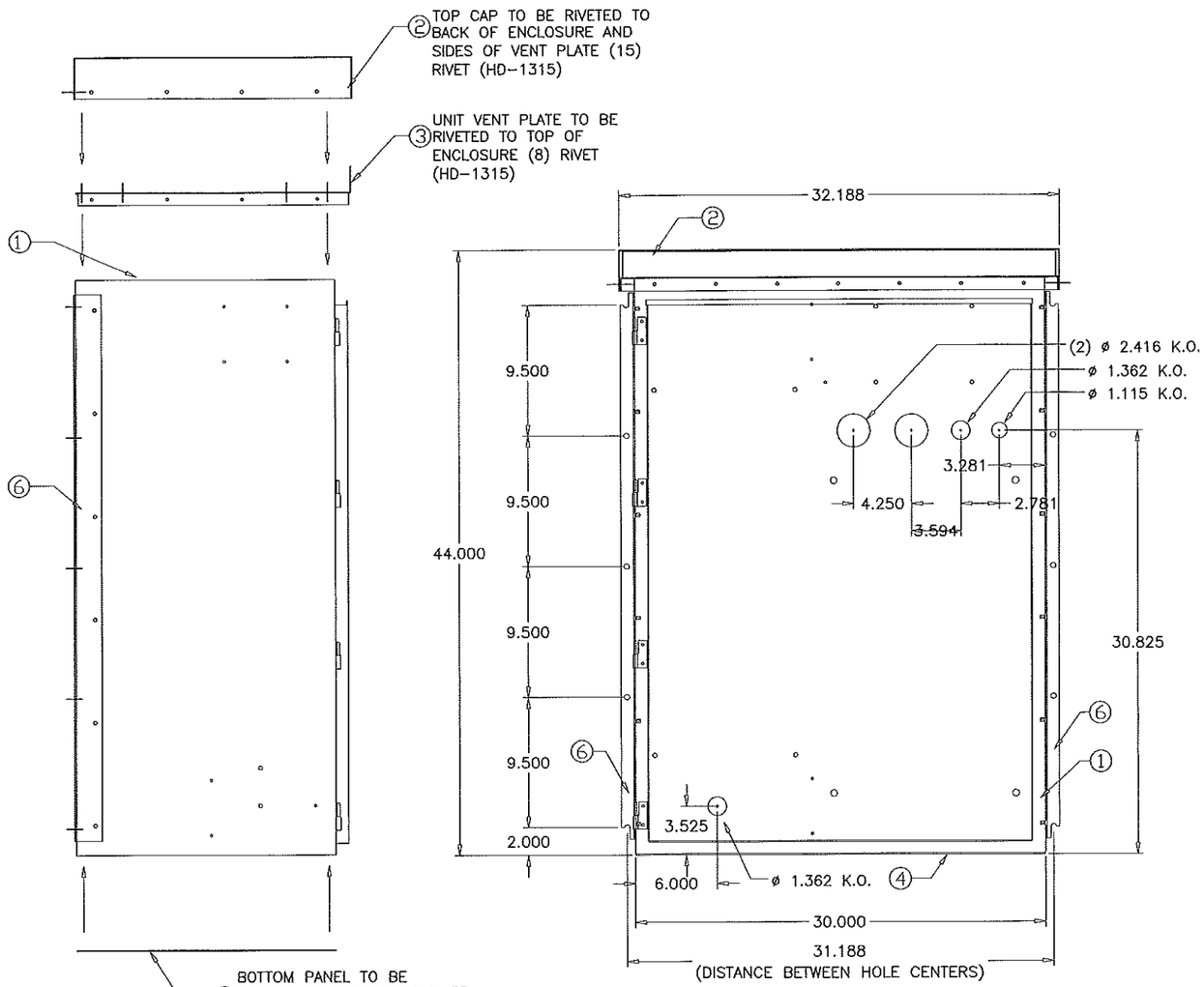

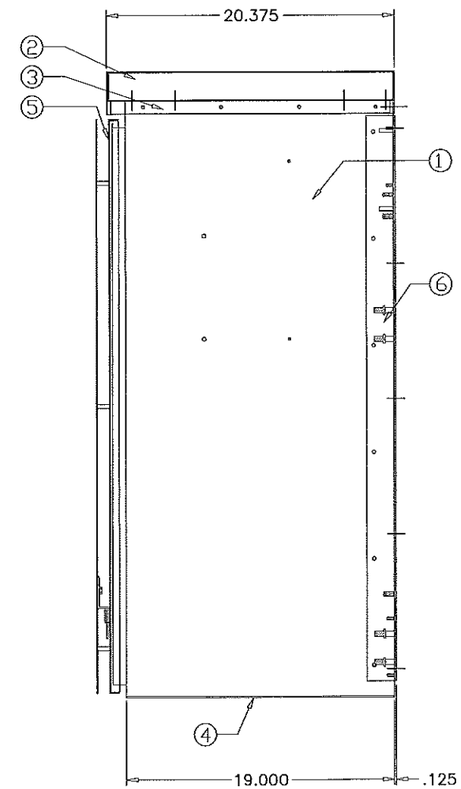

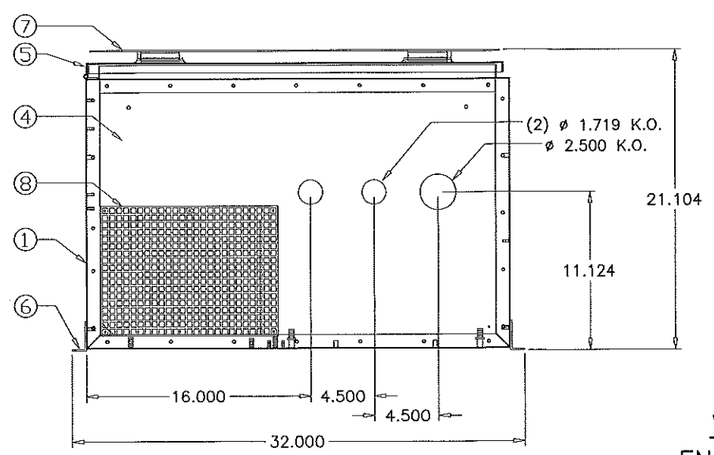

VENTED NEMA 3R
ENCLOSURE ASSEMBLY

PRODUCT REVISED
as complying with the Florida
Building Code
Acceptance No 15-1124.10
Expiration Date 12/09/2019
By
Miami Dade Product Control

AUG 0 4 2016

JAVAD AHMAD
LICENSE
No. 70592
STATE OF FLORIDA
PROFESSIONAL ENGINEER

AL-FAROOQ CORPORATION
ENGINEERS & PRODUCT DEVELOPMENT
9360 SUNSET DRIVE, SUITE 220
MIAMI, FLORIDA 33173 (C.A.N. 3538)
TEL. (305) 264-8100 FAX. (305) 262-6978

COOLER\06-07YIC

SOLUTION XT ROOFTOP AIR HANDLING UNIT

YORK/JOHNSON CONTROLS INC.
15901 S.W. 29TH STREET, SUITE 801
MIRAMAR, FL. 33027
TEL. (954) 389-9675 FAX. (954) 389-9687

revisions:

no	date	by	description
A	07.06.07		MANUF. NAME REV.
B	03.03.09		NO CHANGE THIS SHEET
C	01.20.12		NO CHANGE THIS SHEET
E	08.22.15		NO CHANGE THIS SHEET

date: 08-03-06
scale: 3/32" = 1"
dr. by: HAMID
chk. by:

drawing no.
06-07