MIAMI-DADE COUNTY
DEPARTMENT OF REGULATORY AND ECONOMIC RESOURCES (RER)
BOARD AND CODE ADMINISTRATION DIVISION

MIAMI-DADE COUNTY
PRODUCT CONTROL SECTION
11805 SW 26 Street, Room 208
Miami, Florida 33175-2474
T (786) 315-2590 F (786) 315-2599
www.miamidade.gov/economy

NOTICE OF ACCEPTANCE (NOA)

York / Johnson Controls, Inc.
1499 East Philadelphia Street
York, PA. 17403

SCOPE:
This NOA is being issued under the applicable rules and regulations governing the use of construction materials. The documentation submitted has been reviewed and accepted by Miami-Dade County RER- Product Control Section to be used in Miami Dade County and other areas where allowed by the Authority Having Jurisdiction (AHJ).

This NOA shall not be valid after the expiration date stated below. The Miami-Dade County Product Control Section (In Miami Dade County) and/or the AHJ (in areas other than Miami Dade County) reserve the right to have this product or material tested for quality assurance purposes. If this product or material fails to perform in the accepted manner, the manufacturer will incur the expense of such testing and the AHJ may immediately revoke, modify, or suspend the use of such product or material within their jurisdiction. RER reserves the right to revoke this acceptance, if it is determined by Miami-Dade County Product Control Section that this product or material fails to meet the requirements of the applicable building code.

This product is approved as described herein, and has been designed to comply with the High Velocity Hurricane Zone of the Florida Building Code.

DESCRIPTION: Solution XT Rooftop Air Handling Unit

APPROVAL DOCUMENT: Drawing #06-11, titled "Solution XT Rooftop Air Handling Unit", sheets 1 through 16 of 16, and 14.1 & 14.2 of 16, prepared by Al-Farooq Corp., dated 10/13/06, last revision #E dated 08/22/15, signed and sealed by Javad Ahmad, P.E., on 11/09/15, bearing the Miami-Dade County Product Control Revision stamp with the Notice of Acceptance number and expiration date by Miami-Dade County Product Control Section.

MISSILE IMPACT RATING: Large and Small Missile Impact Resistant

LABELING: Each unit shall bear a permanent label with the manufacturer's name or logo, city, state and the following statement: "Miami-Dade County Product Control Approved", unless otherwise noted herein.

RENEWAL of this NOA shall be considered after a renewal application has been filed and there has been no change in the applicable building code negatively affecting the performance of this product.

TERMINATION of this NOA will occur after the expiration date or if there has been a revision or change in the materials, use, and/or manufacture of the product or process. Misuse of this NOA as an endorsement of any product, for sales, advertising or any other purposes shall automatically terminate this NOA. Failure to comply with any section of this NOA shall be cause for termination and removal of NOA.

ADVERTISEMENT: The NOA number preceded by the words Miami-Dade County, Florida, and followed by the expiration date may be displayed in advertising literature. If any portion of the NOA is displayed, then it shall be done in its entirety.

INSPECTION: A copy of this entire NOA shall be provided to the user by the manufacturer or its distributors and shall be available for inspection at the job site at the request of the Building Official.

This NOA **revises NOA #12-0215.06** and consists of this page 1, evidence submitted pages E-1, E-2, & E-3 as well as approval document mentioned above.
The submitted documentation was reviewed by **Helmy A. Makar, P.E., M.S.**

MIAMI-DADE COUNTY APPROVED

Helmy A. Makar
08/04/2016

NOA No. 15-1221.01
Expiration Date: 12/21/2017
Approval Date: 08/04/2016

York / Johnson Controls, Inc.

NOTICE OF ACCEPTANCE: EVIDENCE SUBMITTED

1. EVIDENCE SUBMITTED UNDER PREVIOUS APPROVAL #07-0130.02

A. DRAWINGS

1. *Drawing No. 06-11, titled " Solution XT Rooftop Air Handling Unit ", sheets 1 through 16 of 16, 14.1 & 14.2 of 16, prepared by Al-Farooq Corporation, dated 10/13/2006, last revision #A dated 11/05/2007, signed and sealed by Humayoun Farooq, P.E., on November 21, 2007.*

B. TESTS

1. *Test reports on 1) Uniform Static Air Pressure Test, Loading per FBC TAS 202-94*
   2) Large Missile Impact Test per FBC, TAS 201-94
   3) Cyclic Wind Pressure Loading per FBC, TAS 203-94
   4) Racking Test per ASTM E-72
   5) Tensile Test per ASTM E-8-02
   along with marked-up drawings and installation diagram of Solution XT Air Handling Unit, prepared by Architectural Testing, Test Report No. 54612.01-122-18, revision 1, dated April 18, 2006, signed and sealed by Steven M. Urich, P.E.

C. CALCULATIONS

1. *Calculation prepared by Al-Farooq Corporation, 8 pages, signed and sealed by Humayoun Farooq, P.E., on January 24, 2007.*

D. QUALITY ASSURANCE

1. *By Miami-Dade County Building Code Compliance Office.*

E. MATERIAL CERTIFICATIONS

1. *Die Drawings.*

F. STATEMENTS

1. *Statement letter of compliance with the Florida Building Code 2004 Edition, dated January 18, 2007, signed and sealed by Humayoun Farooq, P.E.*
2. *Statement letter of no financial interest, dated October 12, 2006, signed and sealed by Humayoun Farooq, P.E.*

2. EVIDENCE SUBMITTED UNDER PREVIOUS APPROVAL #09-0610.15

A. DRAWINGS

1. *Drawing No. 06-11, titled "Solution XT Rooftop Air Handling Unit", sheets 1 through 16 of 16, 14.1 & 14.2 of 16, prepared by Al-Farooq Corp., dated 10/13/06, last revision #B dated 03/03/09, signed and sealed by Arshad Viqar, P.E., on 08/26/09.*

Helmy A. Makar, P.E., M.S.
Product Control Section Supervisor
NOA No. 15-1221.01
Expiration Date: 12/21/2017
Approval Date: 08/04/2016

B. TESTS

1. None.

C. CALCULATIONS

1. None.

D. QUALITY ASSURANCE

1. By Miami-Dade County Building Code Compliance Office.

E. MATERIAL CERTIFICATIONS

1. Die Drawings.

F. STATEMENTS

1. Statement letter of compliance with the Florida Building Code 2007 Edition, dated February 27, 2009, signed and sealed by Humayoun Farooq, P.E.

2. Statement letter of no financial interest, dated February 27, 2009, signed and sealed by Humayoun Farooq, P.E.

3. EVIDENCE SUBMITTED UNDER PREVIOUS APPROVAL #12-0215.06

A. DRAWINGS

1. Drawing #06-11, titled "Solution XT Rooftop Air Handling Unit", sheets 1 through 16 of 16, and 14.1 & 14.2 of 16, prepared by Al-Farooq Corp., dated 10/13/06, last revision #D dated 01/20/12, signed and sealed by Javad Ahmad, P.E., on 11/19/12.

B. TESTS

1. None.

C. CALCULATIONS

1. None.

D. QUALITY ASSURANCE

1. By Miami-Dade County department of Regulatory and Economic Resources.

E. MATERIAL CERTIFICATIONS

1. None.

F. STATEMENTS

1. Statement letter of compliance with the Florida Building Code 2010 Edition, dated August 24, 2012, signed and sealed by Javad Ahmad, P.E.

Helmy A. Makar, P.E., M.S.
Product Control Section Supervisor
NOA No. 15-1221.01
Expiration Date: 12/21/2017
Approval Date: 08/04/2016

NOTICE OF ACCEPTANCE: EVIDENCE SUBMITTED

4. NEW EVIDENCE SUBMITTED

A. DRAWINGS

1. *Drawing #06-11, titled "Solution XT Rooftop Air Handling Unit", sheets 1 through 16 of 16, and 14.1 & 14.2 of 16, prepared by Al-Farooq Corp., dated 10/13/06, last revision #E dated 08/22/15, signed and sealed by Javad Ahmad, P.E., on 11/09/15.*

B. TESTS

1. *Verification letter prepared by Architectural Testing, Test Report No. 54612.01-122-18, revision 1, dated June 29, 2016, signed by Timothy J. McGill.*

C. CALCULATIONS

1. *Calculation prepared by Al-Farooq Corporation, 10 pages, signed and sealed by Javad Ahmad, P.E., on November 12, 2015.*

D. QUALITY ASSURANCE

1. *By Miami-Dade County department of Regulatory and Economic Resources.*

E. MATERIAL CERTIFICATIONS

1. *None.*

F. STATEMENTS

1. *Statement letter of compliance with the Florida Building Code 2014 Edition, dated August 05, 2015, signed and sealed by Javad Ahmad, P.E.*

Helmy A. Makar, P.E., M.S.
Product Control Section Supervisor
NOA No. 15-1221.01
Expiration Date: 12/21/2017
Approval Date: 08/04/2016

UNIT DIMENSIONS:

SEGMENT HEIGHT = 27" TO 78" MAX.
SEGMENT WIDTH = 27" TO 90" MAX.
SEGMENT LENGTH (TOTAL) = 576" MAX.
MAXIMUM PANEL SIZES ARE SHOWN ON SHEET 12.

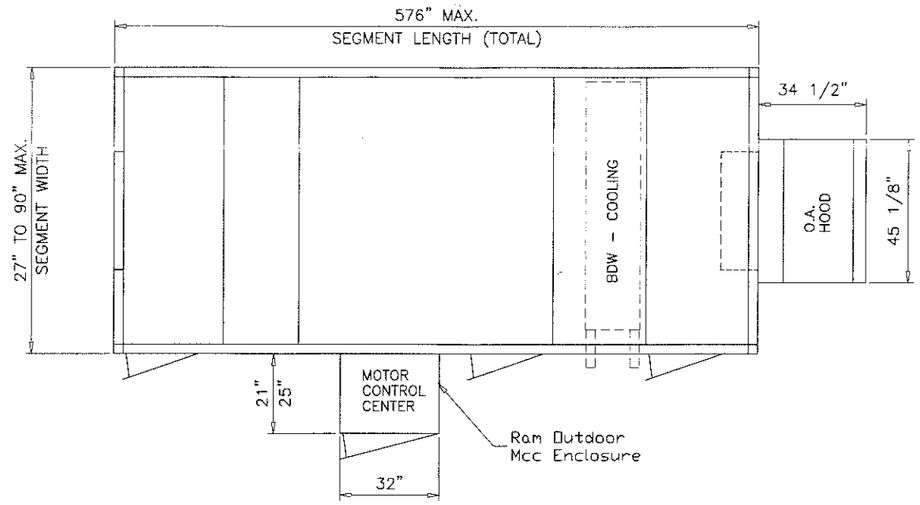

PLAN VIEW

NOTE:
1-1/4" MPT CONDENSATE CONNECTION LOCATED ON LEFT SIDE OF UNIT, 7 5/16" ABOVE ROOF LINE
HORIZONTAL CONDENSATE CONNECTION
DIMENSION TOLERANCE: +/- 1 1/2"

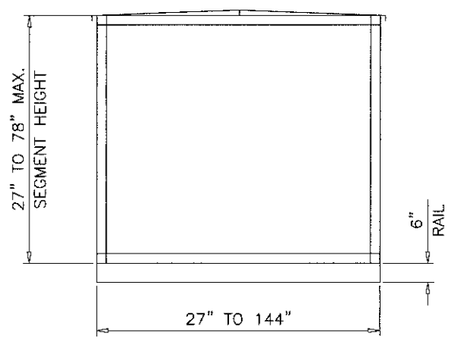

A–A

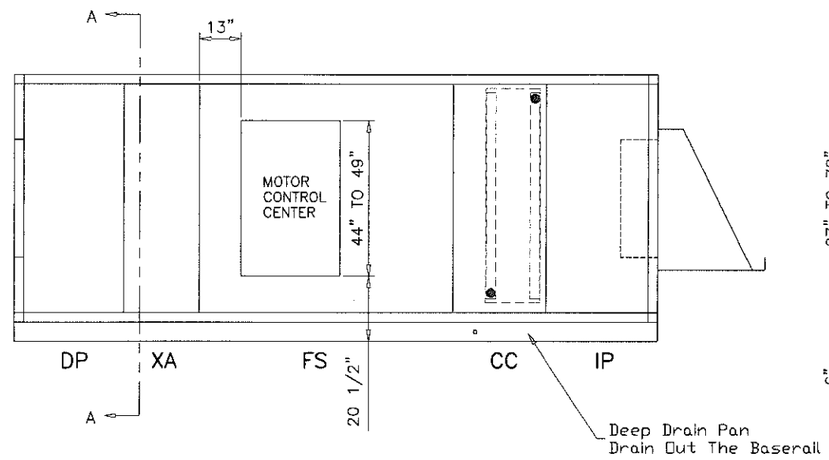

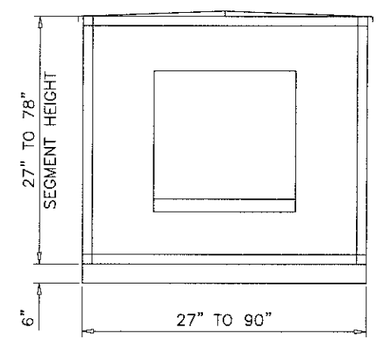

SIDE VIEW

AIR FLOW

FRONT ELEV.

GENERAL NOTES

1. THIS PRODUCT HAS BEEN DESIGNED AND TESTED TO COMPLY WITH THE REQUIREMENTS OF THE FLORIDA BUILDING CODE 2014 EDITION INCLUDING HIGH VELOCITY HURRICANE ZONE (HVHZ).
2. STRUCTURAL STEEL SHALL CONFORM TO ASTM DESIGNATION A–36 AND STEEL SHEET SHALL CONFORM TO ASTM DESIGNATION A–653, GALVANIZED WITH A COATING DESIGNATION OF G90. MIN. Fy = 48,380 PSI.
3. ELECTRICAL AND MECHANICAL DETAILS ARE NOT PART OF THIS APPROVAL.
4. POLYURETHANE SHALL BE RIGID FOAM MIN. DENSITY #2 C.F.
5. MAX. FLAME SPREAD RATING = 5 AS PER ASTM E–84. SMOKE DEVELOPED INDEX = 250 SPONTANEOUS–IGNITION TEMPERATURE = 869°F.
6. ALL STEEL TO BE SHOP PRIMED BEFORE ASSEMBLY.
7. MATERIALS INCLUDING BUT NOT LIMITED TO STEEL/METAL SCREWS, THAT COME INTO CONTACT WITH OTHER DISSIMILAR MATERIALS SHALL MEET THE REQUIREMENTS OF THE FLORIDA BLDG. CODE SECTION 2003.8.4.
8. ALTERNATIVE CONSTRUCTED MOTOR CONTROL ENCLOSURE SEE SHEET 16 FOR DETAIL.

ALLOWABLE DESIGN LOAD		
COMPONENT	POSITIVE	NEGATIVE
WALL	65 PSF	65 PSF
ROOF	65 PSF	65 PSF

Note:
All standard Panel liners and outers are 20 gage galv steel

Engr: JAVAD AHMAD
CIVIL
FLA. PE # 70592
C.A.N. 3538
NOV 19 2008

PRODUCT REVISED
as complying with the Florida Building Code
Acceptance No 15-1221.01
Expiration Date 12/21/2017
By
Miami Dade Product Control

AL-FAROOQ CORPORATION
ENGINEERS & PRODUCT DEVELOPMENT
1235 S.W. 87 AVE
MIAMI, FLORIDA 33174
TEL. (305) 264-8100 FAX. (305) 264-6978

COOLER\06-11YIC

SOLUTION XT ROOFTOP AIR HANDLING UNIT

YORK/JOHNSON CONTROLS INC.
1499 EAST PHILADELPHIA STREET
YORK, PA. 17403
TEL. (717) 815-4218 FAX. (717) 815-4198

revisions:

no	date	by	description
A	11.05.07		REV. PER BCCO COMMENTS
B	03.03.09		UPDATED FOR 2007 FBC
C	01.20.12		UPDATED TO 2010 FBC
D	01.20.12		2010 EDITION TO NOTE 1
E	08.22.15		UPDATED TO 2014 FBC

date: 10-13-06
scale: 1/4"=1-0"
dr. by: HAMID
chk. by:

drawing no.
06-11

Corner Assembly Instructions:

1) Attach DOA Raceway (2) with corner connector (6) using hardware (8) – 2 Screws
2) Attach End Raceway (5) with corner connector (6) using hardware (8) – 2 Screws
3) Attach Vertical Raceway (1) to corner connector (6) using hardware (8) – 4 Screws
4) Attach Corner connector (7) to vertical raceway (1) using hardware (8) – 4 Screws
5) Attach DOA Raceway (3) to corner connector (7) using hardware (8) – 2 Screws
6) Attach End Raceway (4) to corner connector (7) using hardware (8) – 2 Screws

Three other corners are attached in the same manner.

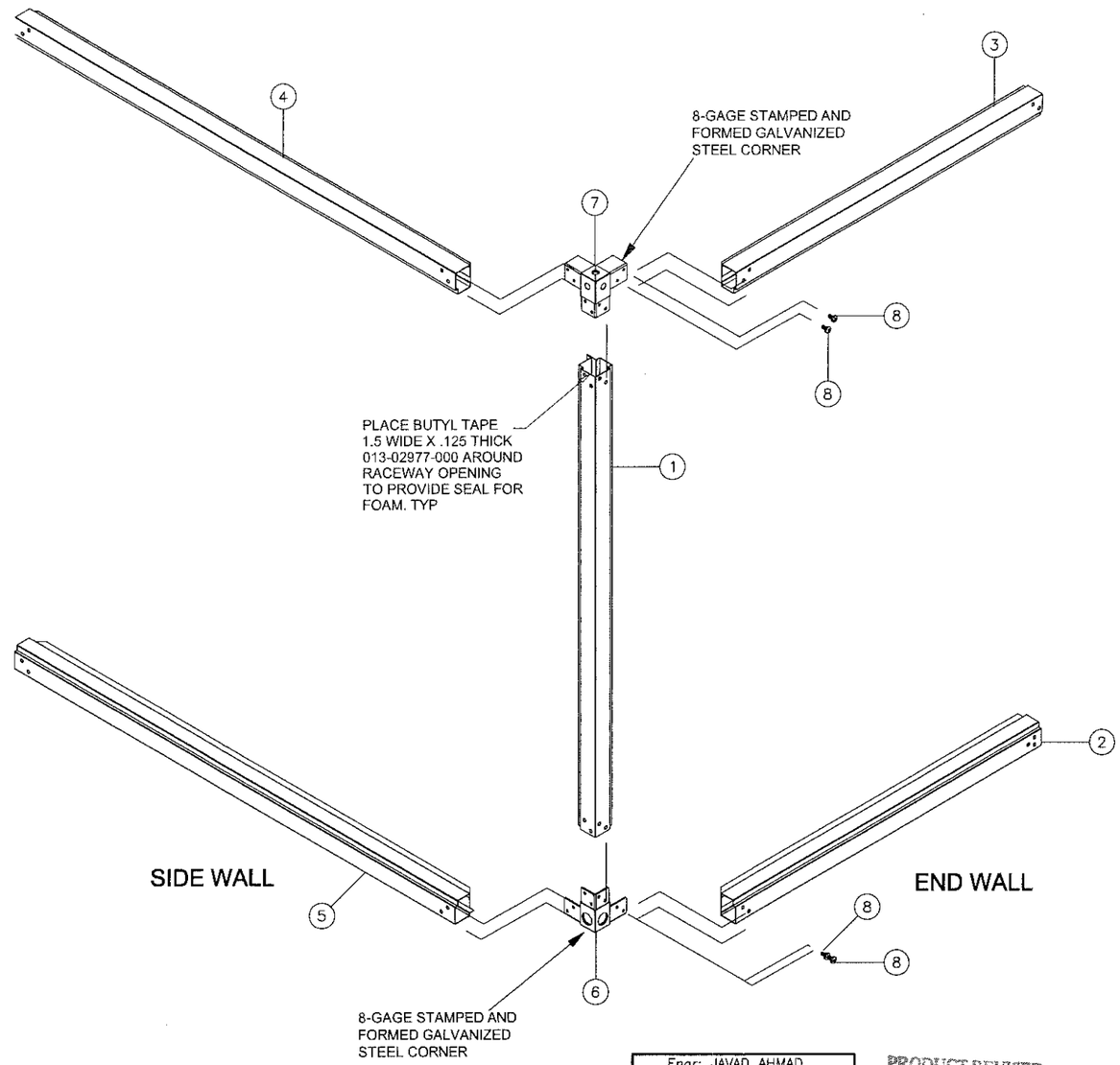

Parts List		
ITEM	QTY	DESCRIPTION
1	1	Vertical Raceway
2	1	FIA Bottom Raceway
3	1	FIA Top Raceway
4	1	End Top Raceway
5	1	End Bottom Raceway
6	1	Bottom Corner Assembly
7	1	Top Corner Assembly
8	6	Screw, hex socket button head 3/8-16 x 3/4" zinc plated

CORNER ASSEMBLY
& INTERNAL FRAMING

Engr: JAVAD AHMAD
CIVIL
FLA. PE # 70592
C.A.N. 3538

NOV 10 2015

PRODUCT REVISED
as complying with the Florida
Building Code
Acceptance No 15-1221.01
Expiration Date 12/21/2017
By
Miami Dade Product Control

AL-FAROOQ CORPORATION
ENGINEERS & PRODUCT DEVELOPMENT
1235 S.W. 87 AVE
MIAMI, FLORIDA 33174
TEL. (305) 264-8100 FAX. (305) 262-6978

COOLER\06-11YIC

SOLUTION XT ROOFTOP AIR HANDLING UNIT

YORK/JOHNSON CONTROLS INC.
1499 EAST PHILADELPHIA STREET
YORK, PA. 17403
TEL. (717) 815-4218 FAX. (717) 815-4198

revisions:

no	date	by	description
A	11.05.07		NO CHANGE THIS SHEET
B	03.03.09		NO CHANGE THIS SHEET
C	01.20.12		NO CHANGE THIS SHEET
E	08.22.15		NO CHANGE THIS SHEET

date: 10-13-06
scale: 1/4"=1-0"
dr. by: HAMID
chk. by:

drawing no.
06-11

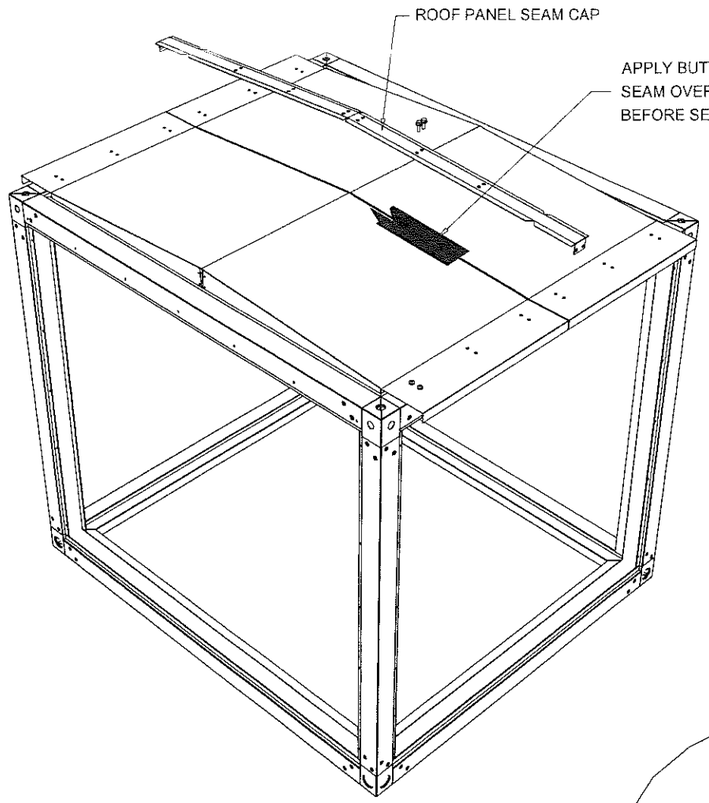

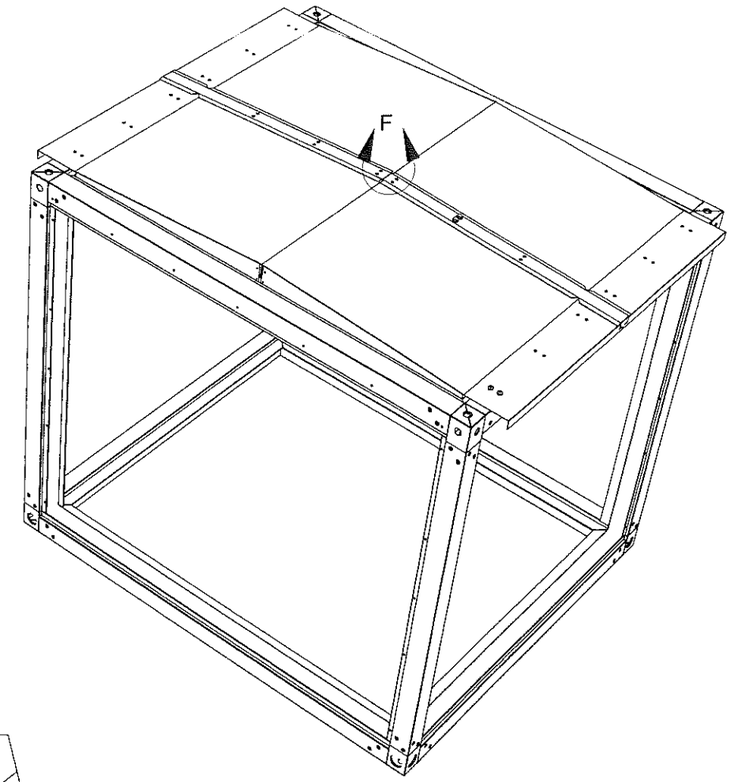

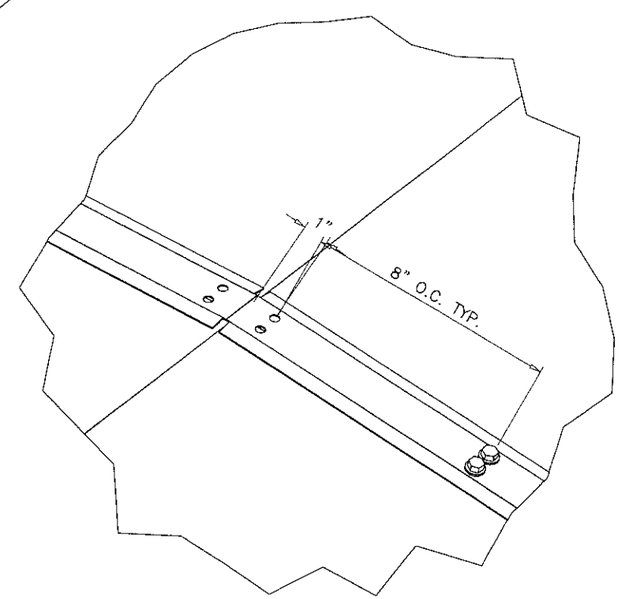

DETAIL F

AFTER BUTYL TAPE IS APPLIED AS SHOWN
ABOVE SECURE SEAM CAP AS SHOWN IN
DETAIL F WITH SCREW, TEK, EPDM, PLTD,0.25-14 X 1". ALONG TOP
AND INTO SIDE AS WELL.

ROOF SEAM
CAP ASSEMBLY
OPTION #1

Engr: JAVAD AHMAD
CIVIL
FLA. PE # 70592
C.A.N. 3538
NOV 09 2015

PRODUCT REVISED
as complying with the Florida
Building Code
Acceptance No 15-1221.01
Expiration Date 12/21/2017
By
Miami Dade Product Control

AL-FAROOQ CORPORATION
ENGINEERS & PRODUCT DEVELOPMENT
1235 S.W. 87 AVE
MIAMI, FLORIDA 33174
TEL. (305) 264-8100 FAX. (305) 264-6978

COOLER\06-11YIC

SOLUTION XT ROOFTOP AIR HANDLING UNIT

YORK/JOHNSON CONTROLS INC.
1499 EAST PHILADELPHIA STREET
YORK, PA. 17403
TEL. (717) 815-4218 FAX. (717) 815-4198

revisions:

no	date	by	description
A	11.05.07		REV. PER BCCO COMMENTS
B	03.03.09		NO CHANGE THIS SHEET
C	01.20.12		NO CHANGE THIS SHEET
E	08.22.15		NO CHANGE THIS SHEET

date: 10-13-06
scale: 1/4"=1-0"
dr. by: HAMID
chk. by:

drawing no.
06-11

sheet 3 of 16

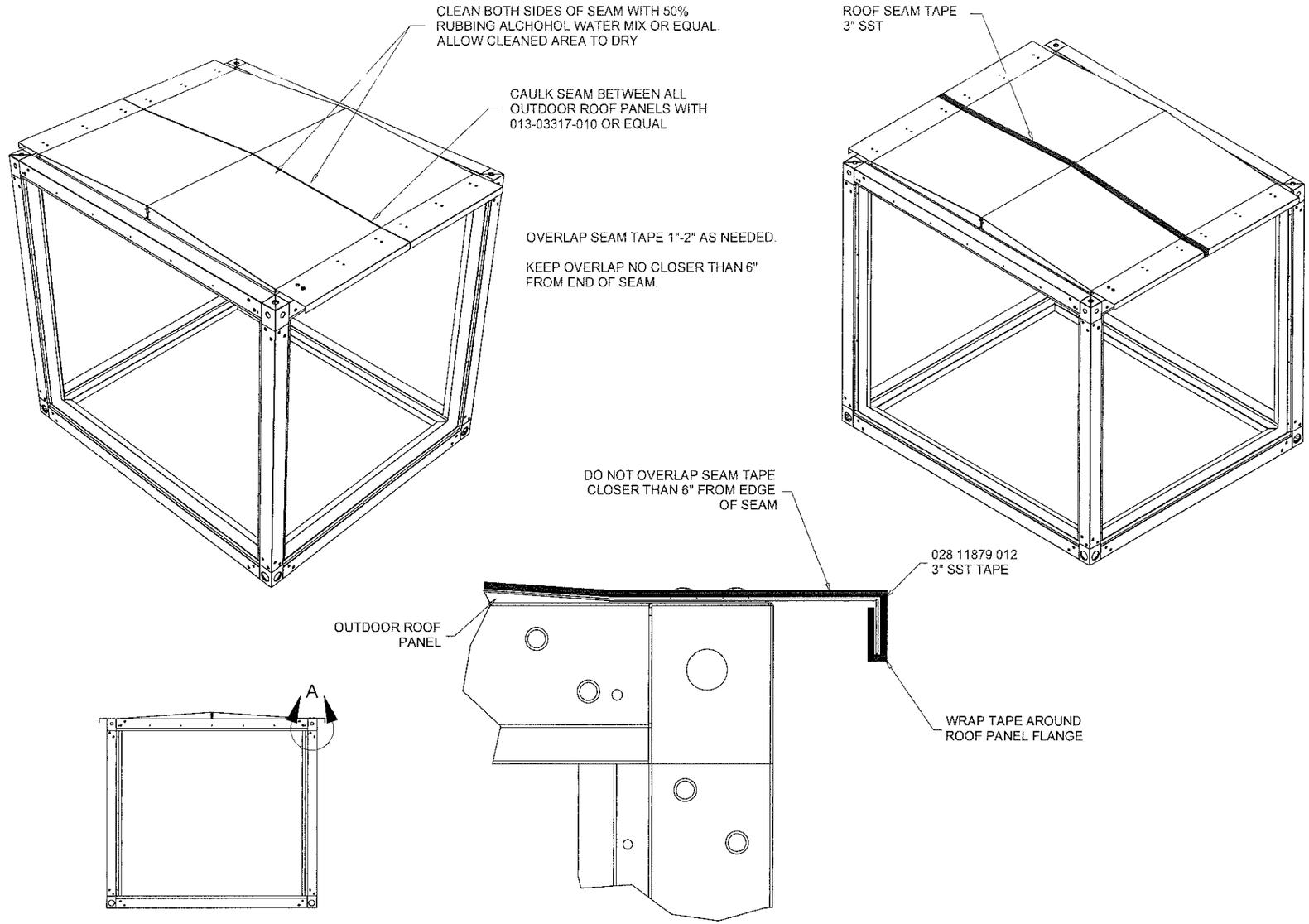

ROOF SEAM TAPE ASSEMBLY OPTION #2

Engr: JAVAD AHMAD
CIVIL
FLA. PE # 70592
C.A.# 3538
NOV 19 2015

PRODUCT REVISED
as complying with the Florida Building Code
Acceptance No 15-1221.01
Expiration Date 12/21/2017
By Hedy A. Villar
Miami Dade Product Control

AL-FAROOQ CORPORATION
ENGINEERS & PRODUCT DEVELOPMENT
1235 S.W. 87 AVE
MIAMI, FLORIDA 33174
TEL. (305) 264-8100 FAX. (305) 26[illegible]-6978

COOLER\06-11YIC

SOLUTION XT ROOFTOP AIR HANDLING UNIT

YORK/JOHNSON CONTROLS INC.
1499 EAST PHILADELPHIA STREET
YORK, PA. 17403
TEL. (717) 815-4218 FAX. (717) 815-4198

revisions:

no	date	by	description
A	11.05.07		REV. PER BCCO COMMENTS
B	03.03.09		NO CHANGE THIS SHEET
C	01.20.12		NO CHANGE THIS SHEET
E	08.22.15		NO CHANGE THIS SHEET

date: 10-13-06
scale: --
dr. by: HAMID
chk. by:

drawing no.
06-11

sheet 4 of 16

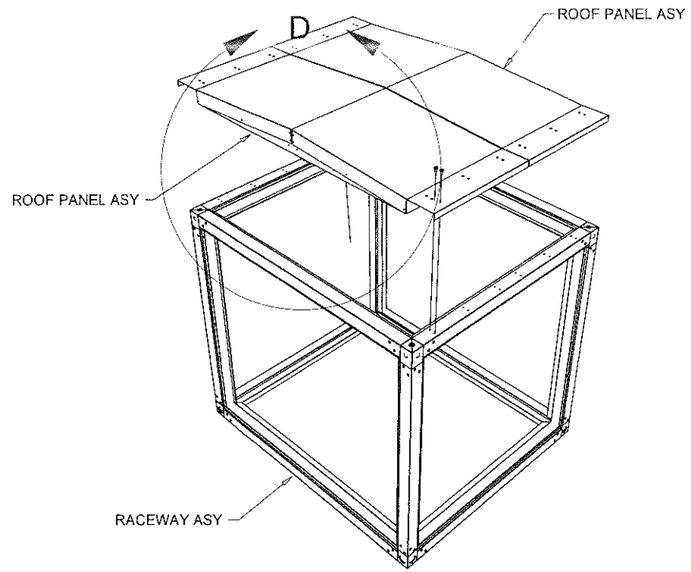

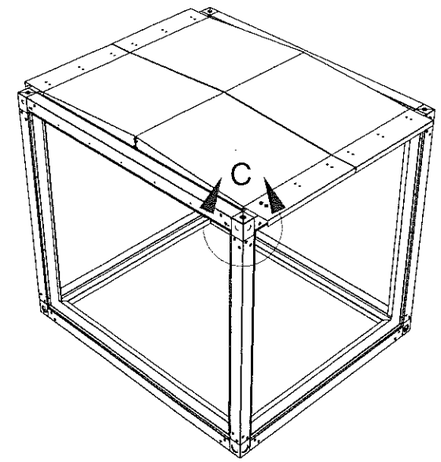

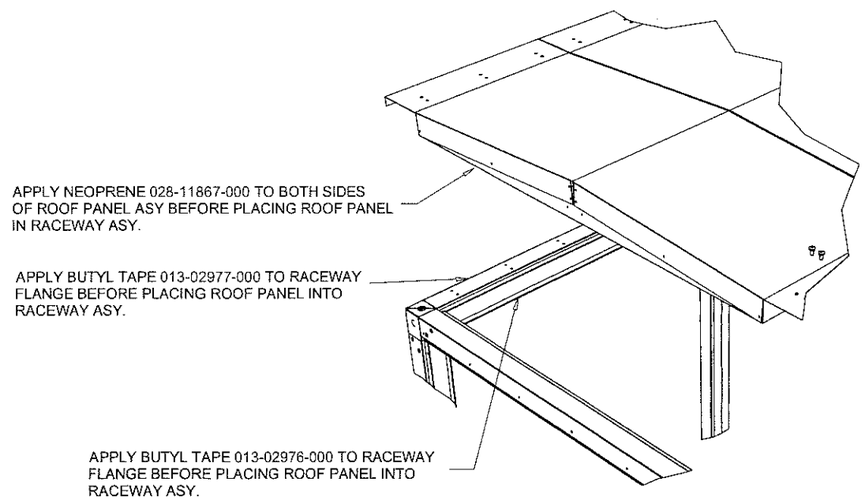

DETAIL D

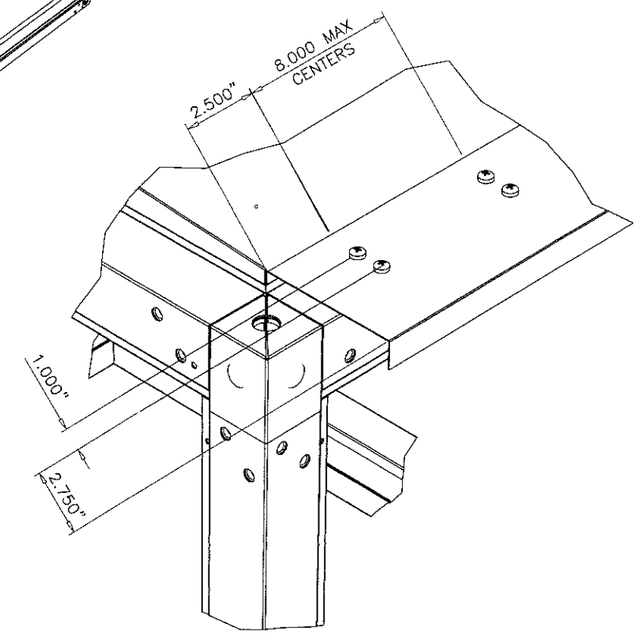

DETAIL C

AFTER APPLYING NEOPRENE AND BUTYL TAPE AS SHOWN IN DETAIL D, PLACE ROOF PANEL INTO RACEWAY ASY AND SECURE AS SHOWN IN DETAIL C USING SCREW TAP TY A PH 14-10 1/4 X 3/4 PAN HEAD PHILLIPS (#1), TYPE A, ZINC PLATED

ROOF PANEL ASSEMBLY

Engr: JAVAD AHMAD
CIVIL
FLA. PE # 70592
C.A.N. 3538
NOV 09 2015

PRODUCT REVISED
as complying with the Florida Building Code
Acceptance No 15-1221.01
Expiration Date 12/21/2017
By Miami Dade Product Control

AL-FAROOQ CORPORATION
ENGINEERS & PRODUCT DEVELOPMENT
1235 S.W. 87 AVE
MIAMI, FLORIDA 33174
TEL. (305) 264-8100 FAX. (305) 264-6978

COOLER\06-11YIC

SOLUTION XT ROOFTOP AIR HANDLING UNIT

YORK/JOHNSON CONTROLS INC.
1499 EAST PHILADELPHIA STREET
YORK, PA. 17403
TEL. (717) 815-4218 FAX. (717) 815-4198

revisions:

no	date	by	description
A	11.05.07		NO CHANGE THIS SHEET
B	03.03.09		NO CHANGE THIS SHEET
C	01.20.12		NO CHANGE THIS SHEET
E	08.22.15		NO CHANGE THIS SHEET

date: 10-13-06
scale: 1/4"=1-0"
dr. by: HAMID
chk. by:

drawing no.
06-11

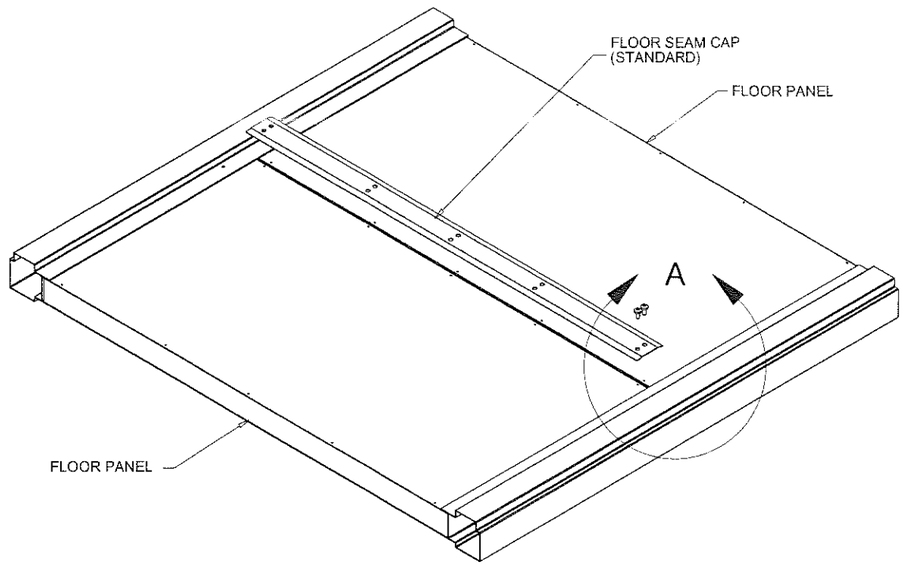

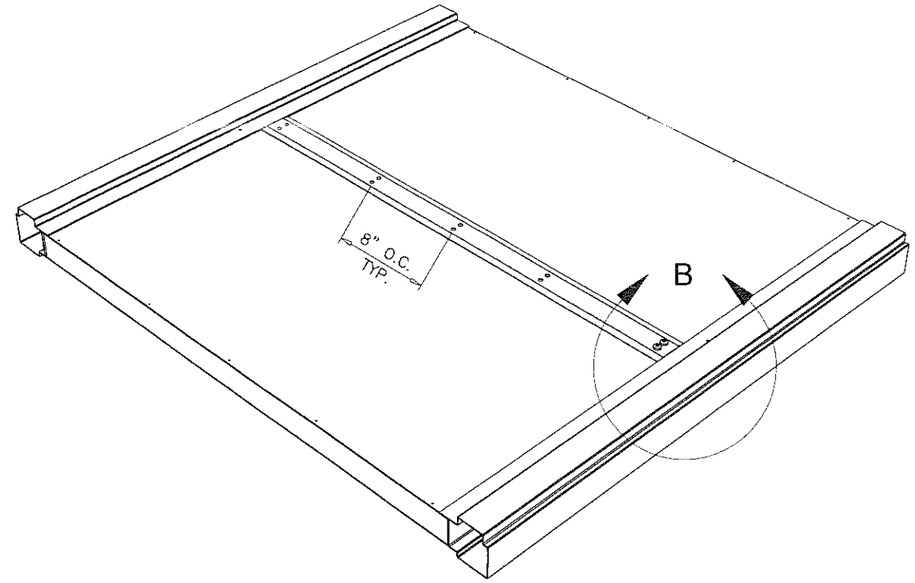

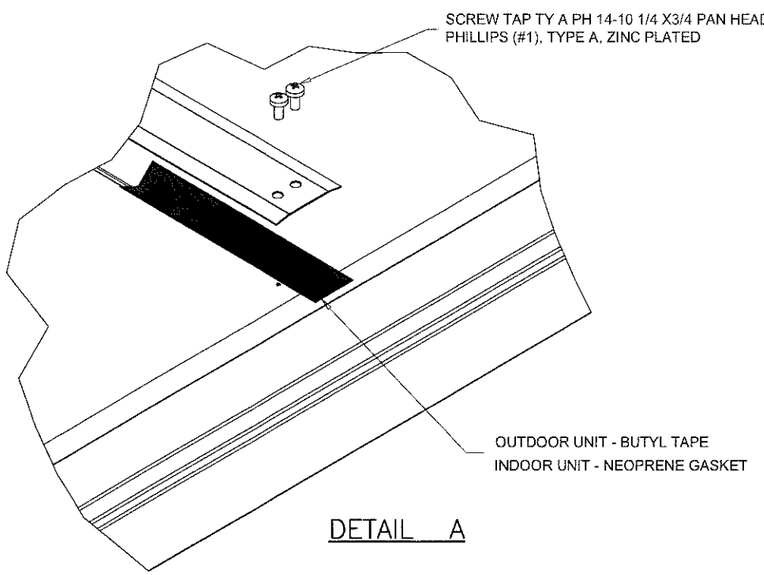

DETAIL A

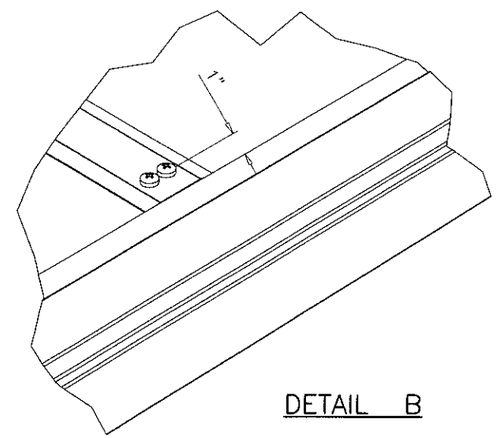

DETAIL B

STANDARD FLOOR PANEL SEAM CAP ASY
APPLY GASKET / BUTYL TAPE ALONG FLOOR PANEL SEAM BEFORE SECURING FLOOR PANEL SEAM CAP WITH SCREWS LISTED IN DETAIL A.

FLOOR SEAM CAP
MOUNTING DETAIL
OPTION #1

Engr: JAVAD AHMAD
CIVIL
FLA. PE # 70592
C.A.N. 3538

NOV 0 [illegible]

PRODUCT REVISED
as complying with the Florida
Building Code
Acceptance No 15-1221.01
Expiration Date 12/21/2017
By [illegible]
Miami Dade Product Control

AL-FAROOQ CORPORATION
ENGINEERS & PRODUCT DEVELOPMENT
1235 S.W. 87 AVE
MIAMI, FLORIDA 33174
TEL. (305) 264-8100 FAX. (305) 26[illegible]-6978

COOLER\06-11YIC

SOLUTION XT ROOFTOP AIR HANDLING UNIT

YORK/JOHNSON CONTROLS INC.
1499 EAST PHILADELPHIA STREET
YORK, PA. 17403
TEL. (717) 815-4218 FAX. (717) 815-4198

revisions:

no	date	by	description
A	11.05.07		NO CHANGE THIS SHEET
B	03.03.09		NO CHANGE THIS SHEET
C	01.20.12		NO CHANGE THIS SHEET
E	08.22.15		NO CHANGE THIS SHEET

date: 10-13-06
scale: 1/4"=1-0"
dr. by: HAMID
chk. by:

drawing no.
06-11

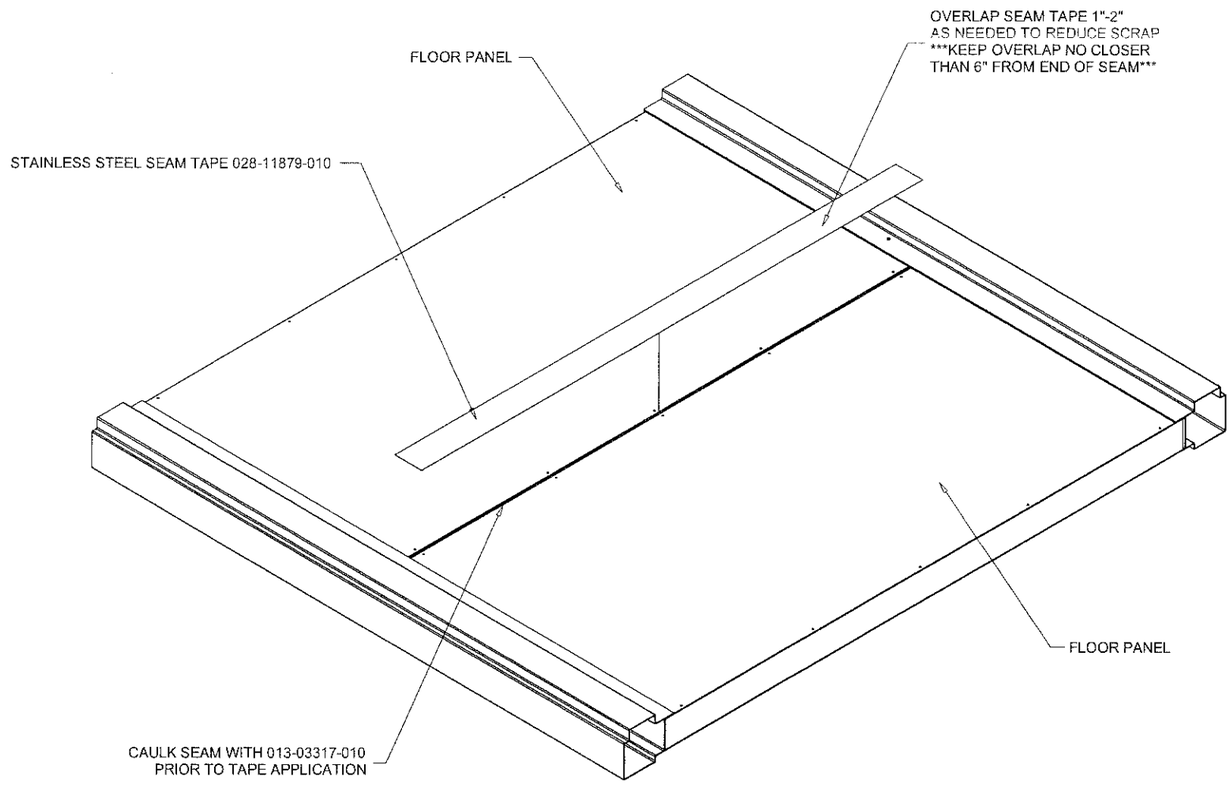

STANDARD FLOOR PANEL SEAM TAPE APPLICATION
THIS APPLIES FOR BOTH XTI & XTO UNITS.
CLEAN BOTH SIDES OF SEAM WITH 50% RUBBING ALCHOHOL WATER MIX OR EQUAL. ALLOW TO DRY.
CAULK ALONG FLOOR PANEL SEAM.
APPLY SEAM TAPE EVENLY ALONG ENTIRE FLOOR PANEL SEAM.

FLOOR SEAM TAPE
ASSEMBLY
OPTION #2

Engr: JAVAD AHMAD
CIVIL
FLA. PE # 70592
C.A.N. 3538
NOV 09 2006

PRODUCT REVISED
as complying with the Florida
Building Code
Acceptance No 15-1221.01
Expiration Date 12/21/2017
By
Miami Dade Product Control

AL-FAROOQ CORPORATION
ENGINEERS & PRODUCT DEVELOPMENT
1235 S.W. 87 AVE
MIAMI, FLORIDA 33174
TEL. (305) 264-8100 FAX. (305) 262-6978

COOLER\06-11YIC

SOLUTION XT ROOFTOP AIR HANDLING UNIT

YORK/JOHNSON CONTROLS INC.
1499 EAST PHILADELPHIA STREET
YORK, PA. 17403
TEL. (717) 815-4198 FAX. (717) 815-4198

revisions:

no	date	by	description
A	11.05.07		NO CHANGE THIS SHEET
B	03.03.09		NO CHANGE THIS SHEET
C	01.20.12		NO CHANGE THIS SHEET
E	08.22.15		NO CHANGE THIS SHEET

date: 10-13-06
scale: -
dr. by: HAMID
chk. by:

drawing no.
06-11

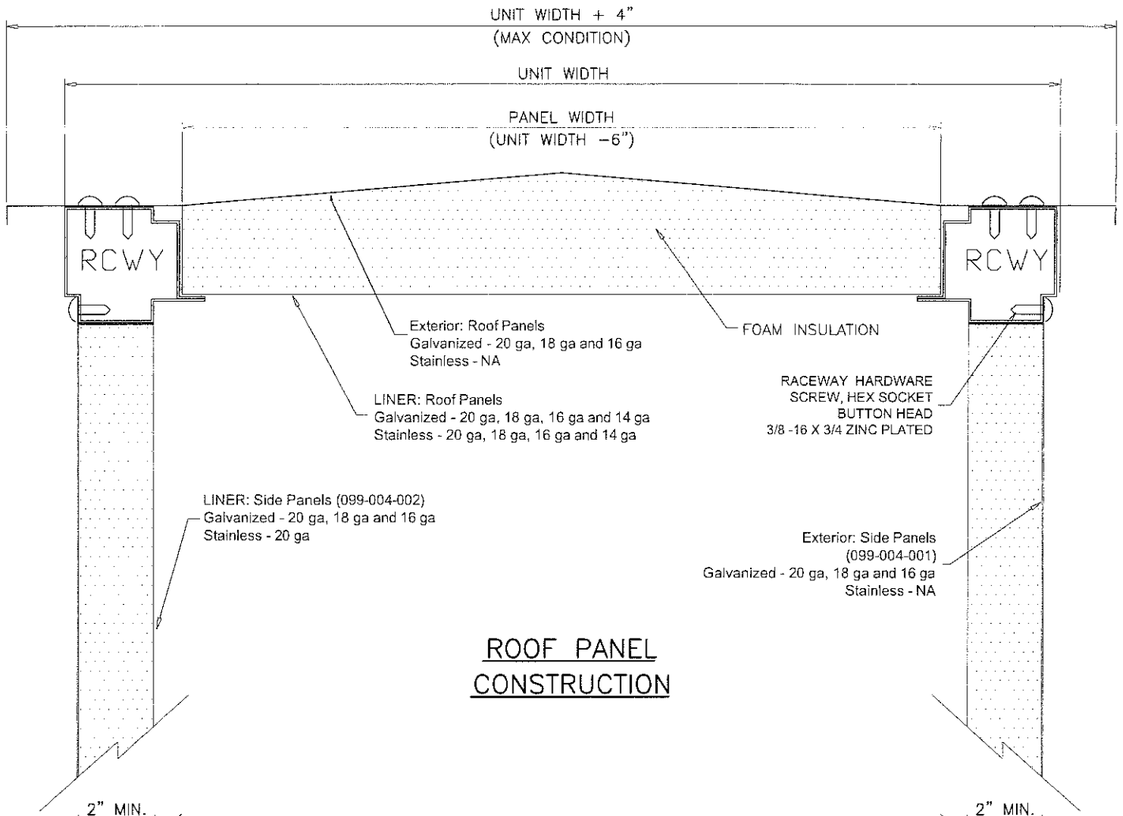

ROOF PANEL CONSTRUCTION

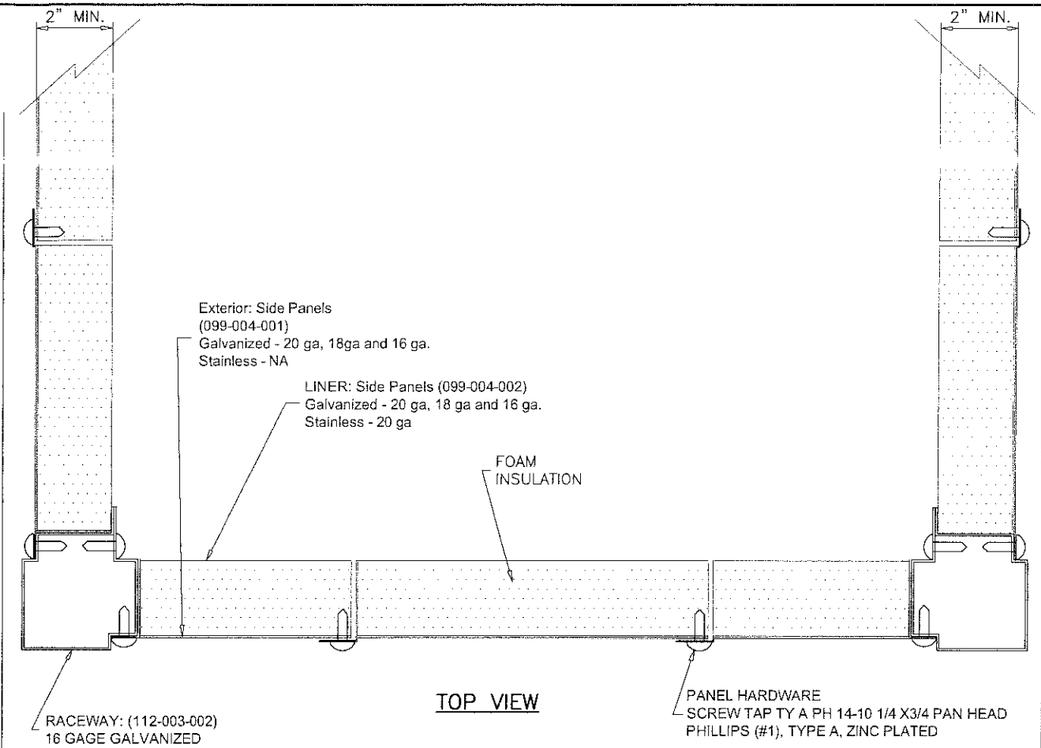

TOP VIEW

WALL PANEL CROSS SECTION

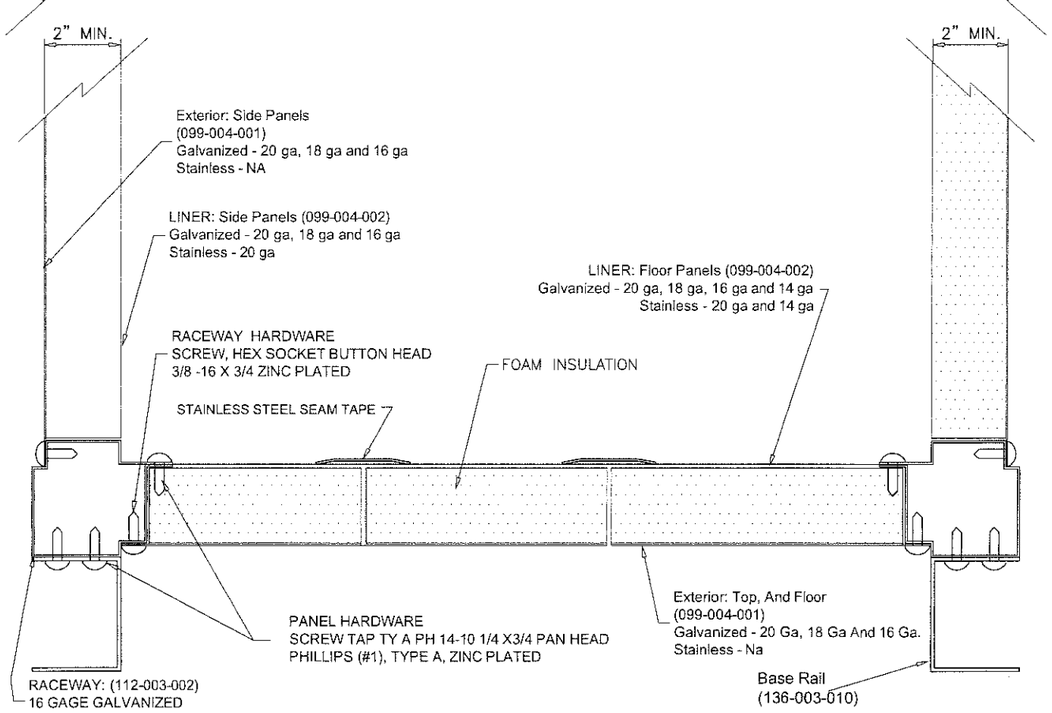

FLOOR PANEL CONSTRUCTION

Notes:

1. Roof panels, floor panels, and wall panels are 2.00" thick double wall construction. Exterior roof and floor panel construction of 20 gage (min) galvanized steel and 20 gage (min) for wall panels. The interior liner shall be constructed of 20 gage (min) for roof and floor panels and 20 gage (min) for walls.

2. Access doors are 2.00" thick, double−wall construction, of galvanized sheet steel. The interior and exterior liner construction shall consist of 24 gage sheet steel.

3. Insulation is spray injected closed−cell foam.

Engr: JAVAD AHMAD
CIVIL
FLA. PE # 70592
C.A.N. 3538
NOV 19 2015

PRODUCT REVISED
as complying with the Florida
Building Code
Acceptance No 15-1221.01
Expiration Date 12/21/2017
By
Miami Dade Product Control

AL-FAROOQ CORPORATION
ENGINEERS & PRODUCT DEVELOPMENT
1235 S.W. 87 AVE
MIAMI, FLORIDA 33174
TEL. (305) 264-8100 FAX. (305) 26 -6978
COOLER\06-11YIC

SOLUTION XT ROOFTOP AIR HANDLING UNIT

YORK/JOHNSON CONTROLS INC.
1499 EAST PHILADELPHIA STREET
YORK, PA. 17403
TEL. (717) 815-4218 FAX. (717) 815-4198

revisions:

no	date	by	description
A	11.05.07		NO CHANGE THIS SHEET
B	03.03.09		NO CHANGE THIS SHEET
C	01.20.12		NO CHANGE THIS SHEET
D	08.14.12		CORRECTED GAGES IN NOTES
E	08.22.15		NO CHANGE THIS SHEET

date: 10-13-06
scale: 1/4" = 1"
dr. by: HAMID
chk. by:

drawing no.
06-11

A–A

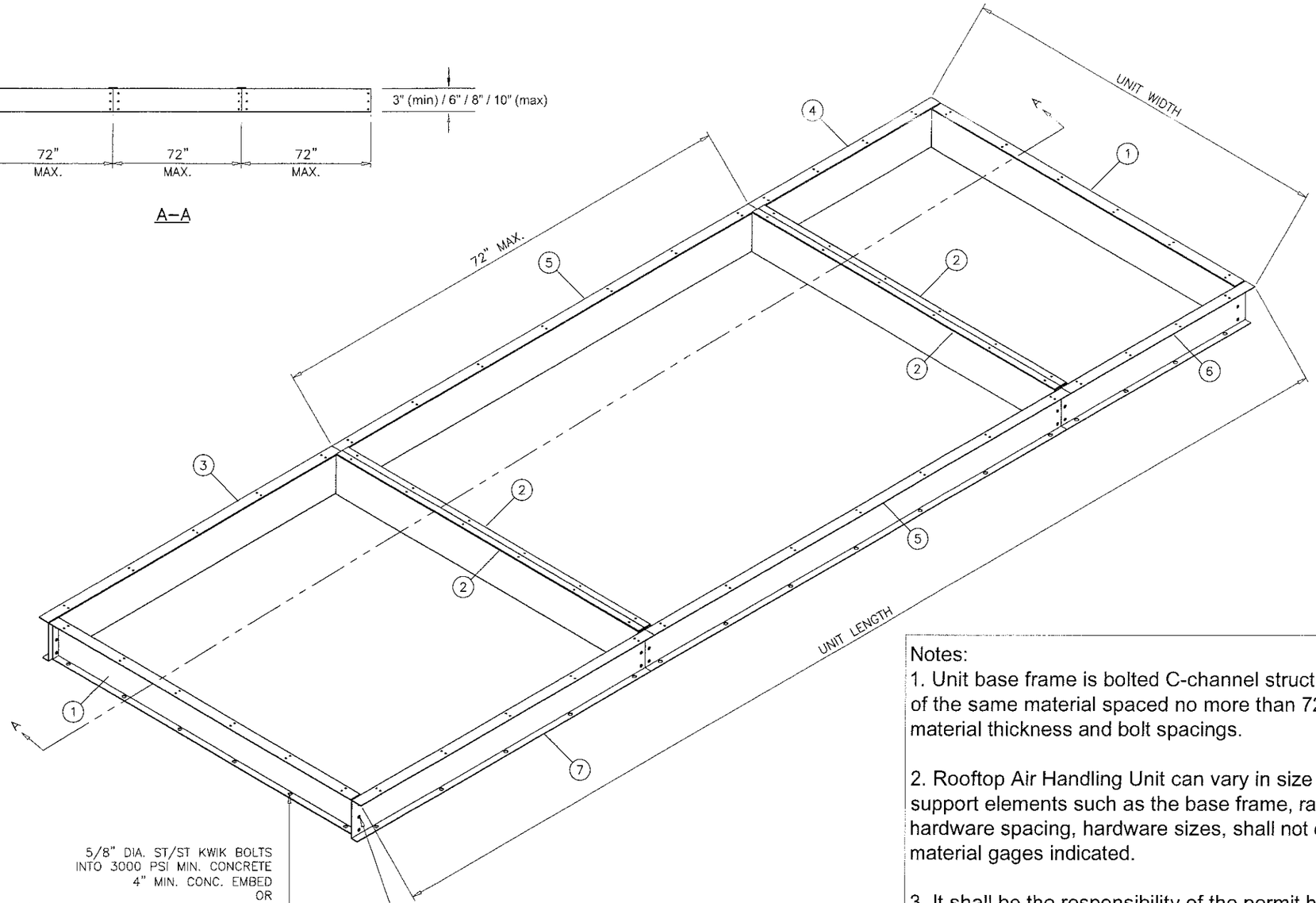

NOTE:
VERIFY CABLE LOCATION BEFORE DRILLING
IF ROOF IS POST TENSION CONCRETE SLAB.

Parts List

ITEM	QTY	DESCRIPTION
1	2	BASERAIL END XTI GALV
2	4	BASERAIL INT XTI GALV
3	1	BASERAIL DOA FIA GALV
4	1	BASERAIL DOA LIA GALV
5	2	BASERAIL DOA MIA GALV
6	1	BASERAIL DOA FIA GALV
7	1	BASERAIL DOA LIA GALV

Notes:

1. Unit base frame is bolted C-channel structural steel with c-channel cross supports of the same material spaced no more than 72" apart. Refer to sheet 10 for material thickness and bolt spacings.

2. Rooftop Air Handling Unit can vary in size however, spacing of the structural support elements such as the base frame, raceways,roof/floor/wall panels, hardware spacing, hardware sizes, shall not exceed the dimensions or material gages indicated.

3. It shall be the responsibility of the permit holder to verify the strucutal integrity of the existing structure to support the loads superimposed by the Rooftop Air Handling Unit.

4. Attachment to the roof to prevent sliding and overturning of the air handling unit is not part of the scope of this product approval. These elements shall be reviewed by the corresponding building department.

SOLUTION XT
BASERAIL ASSEMBLY

Engr: JAVAD AHMAD
CIVIL
FLA. PE # 70592
C.A.N. 3538
NOV 09 2015

PRODUCT REVISED
as complying with the Florida
Building Code
Acceptance No 15-1221.01
Expiration Date 12/21/2017
By
Miami Dade Product Control

AL-FAROOQ CORPORATION
ENGINEERS & PRODUCT DEVELOPMENT
1235 S.W. 87 AVE
MIAMI, FLORIDA 33174
TEL. (305) 264-8100 FAX. (305) 264-6978

COOLER\06-11YIC

SOLUTION XT ROOFTOP AIR HANDLING UNIT

YORK/JOHNSON CONTROLS INC.
1499 EAST PHILADELPHIA STREET
YORK, PA. 17403
TEL. (717) 815-4218 FAX. (717) 815-4198

revisions:

no	date	by	description
A	11.05.07		REV. PER BCCO COMMENTS
B	03.03.09		NO CHANGE THIS SHEET
C	01.20.12		NO CHANGE THIS SHEET
E	08.22.15		UPDATED TO 2014 FBC

date: 10-13-06
scale: 1/4"=1-0"
dr. by: HAMID
chk. by:

drawing no.
06-11

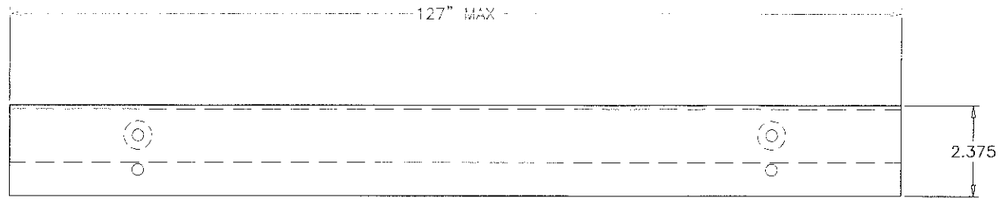

FORMED TOP VIEW

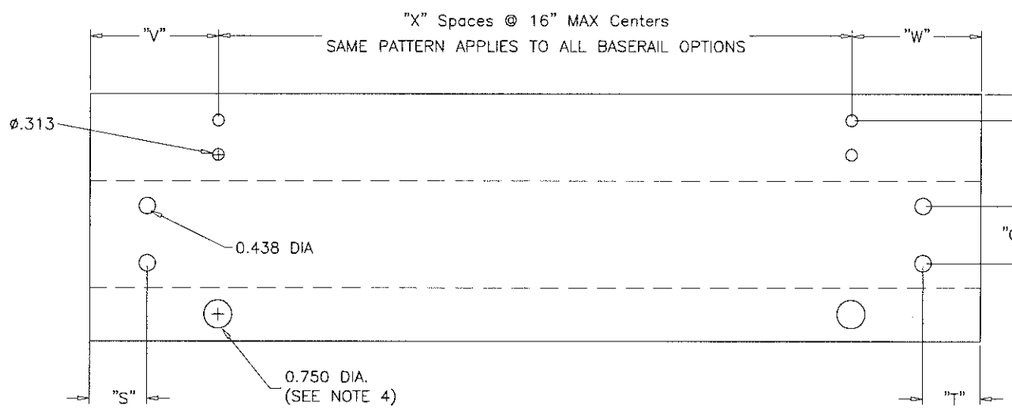

FLAT VIEW

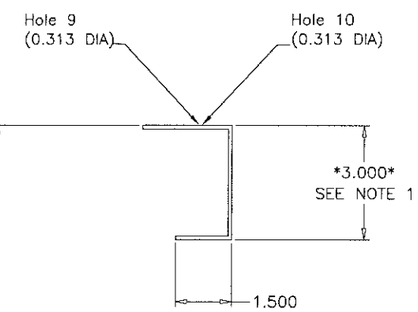

FORMED SIDE VIEW

5/8" DIA. HOLES USED WITH 1/4" SCREWS TO ATTACH
BASERAIL TO UNIT RACEWAY.
3/4" DIA. HOLES USED WITH 5/8" BOLTS TO ATTACH
BASERAIL TO DUNAGE STEEL OR CONC. SLAB.
SEE SHEET 11 FOR BASERAIL USED FOR ROOF CURB.
SEE NOTE # 4 BELOW.

NOTES:

1) BASERAIL OPTION HEIGHTS 3",6",8",10"

2) HOLE SPACING BETWEEN FIRST AND LAST WILL VARY UPON BASERAIL LENGTH BUT CENTERS WILL NOT EXCEED 16" AS INDICATED BY "X" SPACES.

3) BASERAIL GAGES AS FOLLOWS – 3" = 12 GAGE GALV
6" = 10 GAGE GALV
8" = 10 GAGE GALV
10" = 8 GAGE GALV

4) 0.75" DIA. BASERAIL BOLT HOLE SHALL BE USE FOR ATTACHMENT TO THE ROOF TO PREVENT SLIDING AND OVERTURNING OF THE AIR HANDLING UNIT IS NOT PART OF THE SCOPE OF THIS PRODUCT APPROVAL. THESE ATTACHMENT DETAILS SHALL BE REVIEWED BY THE CORRESPONDING BUILDING DEPARTMENT.

Baserail Height	"P"	"Q" SPACES	"R"	BASERAIL LOCATION	"S"	"T"	"V"	"W"
3	.875	1	1.250	LIA	.941	1.781	3.153	5.403
6	1.657	1	2.687	MIA	.941	.941	3.153	3.153
8	1.657	2	2.687	FIA	1.781	.941	5.403	3.153
10	1.657	2	2.687	FULL	1.781	1.781	5.403	5.403

BASERAIL DIMENSIONS

Engr: JAVAD AHMAD
CIVIL
FLA. PE # 70592
C.A.N. 3538
NOV 03 2015

PRODUCT REVISED
as complying with the Florida
Building Code
Acceptance No 15-1221.01
Expiration Date 12/21/2017
By
Miami Dade Product Control

AL-FAROOQ CORPORATION
ENGINEERS & PRODUCT DEVELOPMENT
1235 S.W. 87 AVE
MIAMI, FLORIDA 33174
TEL. (305) 264-8100 FAX. (305) 26 -6978

COOLER\06-11YIC

SOLUTION XT ROOFTOP AIR HANDLING UNIT

YORK/JOHNSON CONTROLS INC.
1499 EAST PHILADELPHIA STREET
YORK, PA. 17403
TEL. (717) 815-4198 FAX. (717) 815-4218

revisions:

no	date	by	description
A	11.05.07		REV. PER BCCO COMMENTS
B	03.03.09		NO CHANGE THIS SHEET
C	01.20.12		NO CHANGE THIS SHEET
E	08.22.15		NO CHANGE THIS SHEET

date: 10-13-06
scale: 1/4" = 1"
dr. by: HAMID
chk. by:

drawing no.
06-11

CALCULATION CHART AND DATA			
VERTICAL HOLE DATA			
BASERAIL HEIGHT	"A"	"B" SPACES	"C"
6"	1.657	1	2.687
8"	1.657	2	2.687
10"	1.657	2	2.687

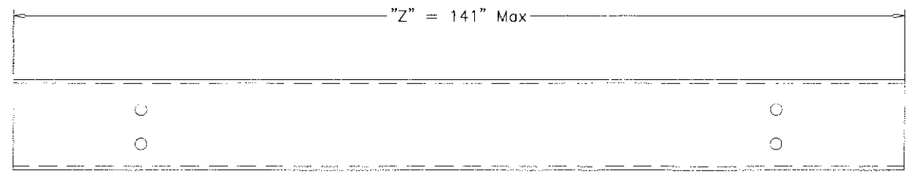

FORMED TOP VIEW

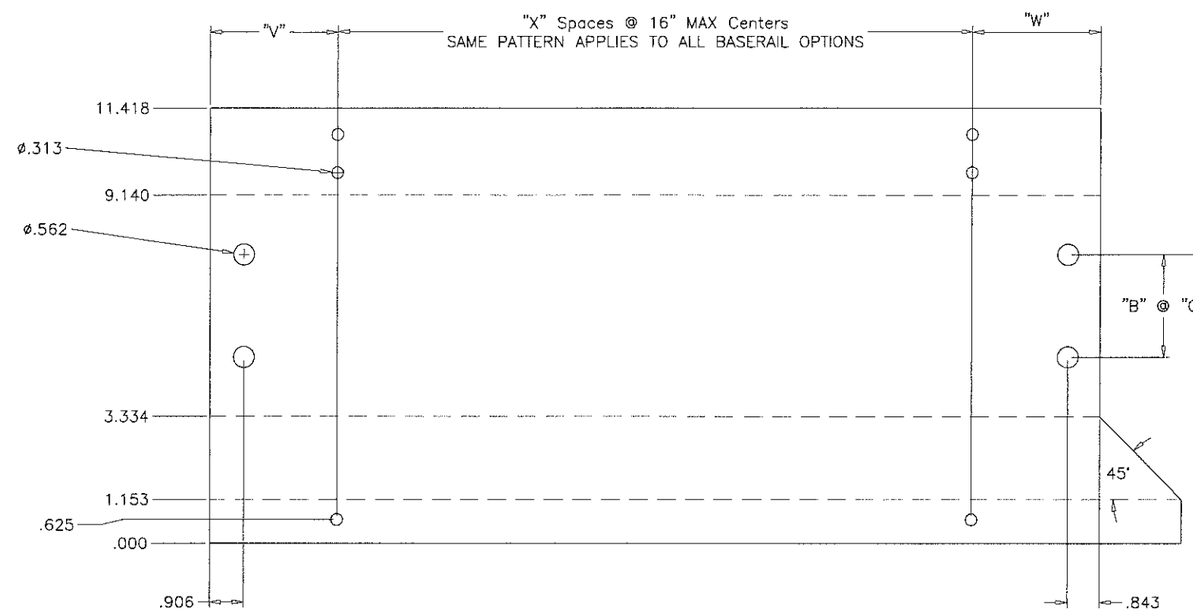

FLAT VIEW

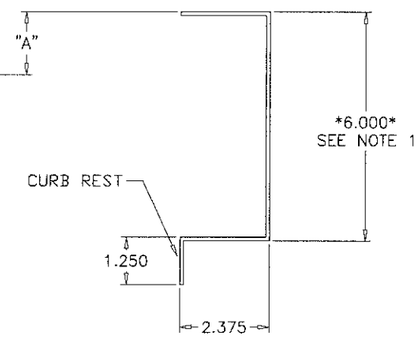

FORMED SIDE VIEW

NOTES:

1) BASERAIL OPTION HEIGHTS 6",8",10"

2) HOLE SPACING BETWEEN FIRST AND LAST WILL VARY UPON BASERAIL LENGTH BUT CENTERS WILL NOT EXCEED 16" AS INDICATED BY "X" SPACES.

3) BASERAIL GAGES AS FOLLOWS – 6" = 10 GAGE GALV
8" = 10 GAGE GALV
10" = 8 GAGE GALV

4) 0.75" DIA. BASERAIL BOLT HOLE SHALL BE USE FOR ATTACHMENT TO THE ROOF TO PREVENT SLIDING AND OVERTURNING OF THE AIR HANDLING UNIT IS NOT PART OF SCOPE OF THIS PRODUCT APPROVAL. THESE ATTACHMENT DETAILS SHALL BE REVIEWED BY THE CORRESPONDING BUILDING DEPARTMENT.

Baserail Location		"V"	"W"	"Z"	"X"
FIA	"C"	3.153	3.028	=SUM OF SECTION LENGTHS + 3.063 (<=141")	=ROUNDUP((Z–V–W)/16")

ALTERNATE BASERAIL WITH CURB REST
DIMENSIONS
FOR USE WITH ROOF CURB

Engr: JAVAD AHMAD
CIVIL
FLA. PE # 70592
C.A.N. 3538
NOV 2015

PRODUCT REVISED
as complying with the Florida Building Code
Acceptance No 15-1221.01
Expiration Date 12/21/2017
By
Miami Dade Product Control

AL-FAROOQ CORPORATION
ENGINEERS & PRODUCT DEVELOPMENT
1235 S.W. 87 AVE
MIAMI, FLORIDA 33174
TEL. (305) 264-8100 FAX. (305) 26 -6978

COOLER\06-11YIC

SOLUTION XT ROOFTOP AIR HANDLING UNIT

YORK/JOHNSON CONTROLS INC.
1499 EAST PHILADELPHIA STREET
YORK, PA. 17403
TEL. (717) 815-4198 FAX. (717) 815-4218

revisions:

no	date	by	description
A	11.05.07		REV. PER BCCO COMMENTS
B	03.03.09		NO CHANGE THIS SHEET
C	01.20.12		NO CHANGE THIS SHEET
E	08.22.15		NO CHANGE THIS SHEET

date: 10-13-06
scale: 1/4" = 1"
dr. by: HAMID
chk. by:

drawing no.
06-11

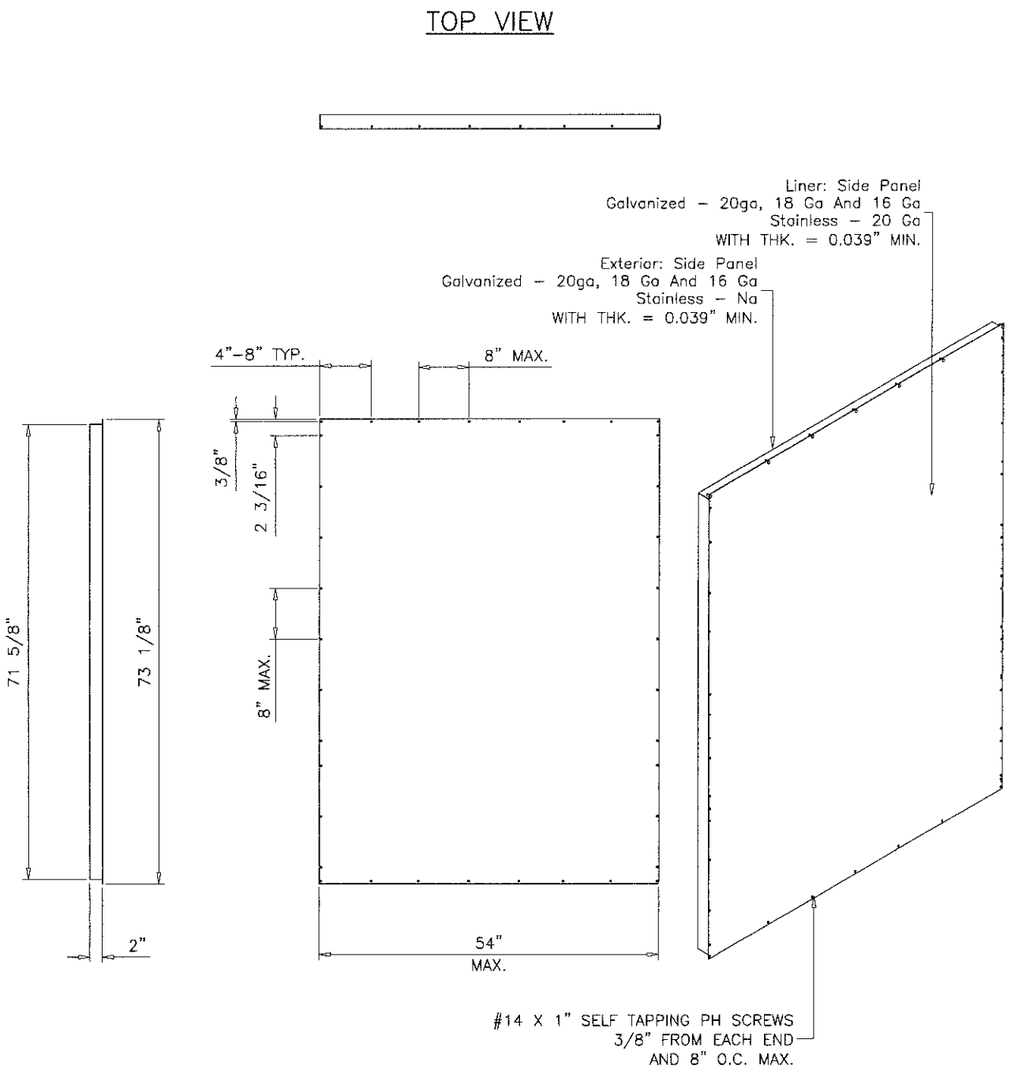

SOLUTION XT–54W
WALL PANEL ASSY.

A BUTYL TAPE SHALL BE USED WHERE EACH PANEL OVERLAPPED AND FASTENED TOGETHER

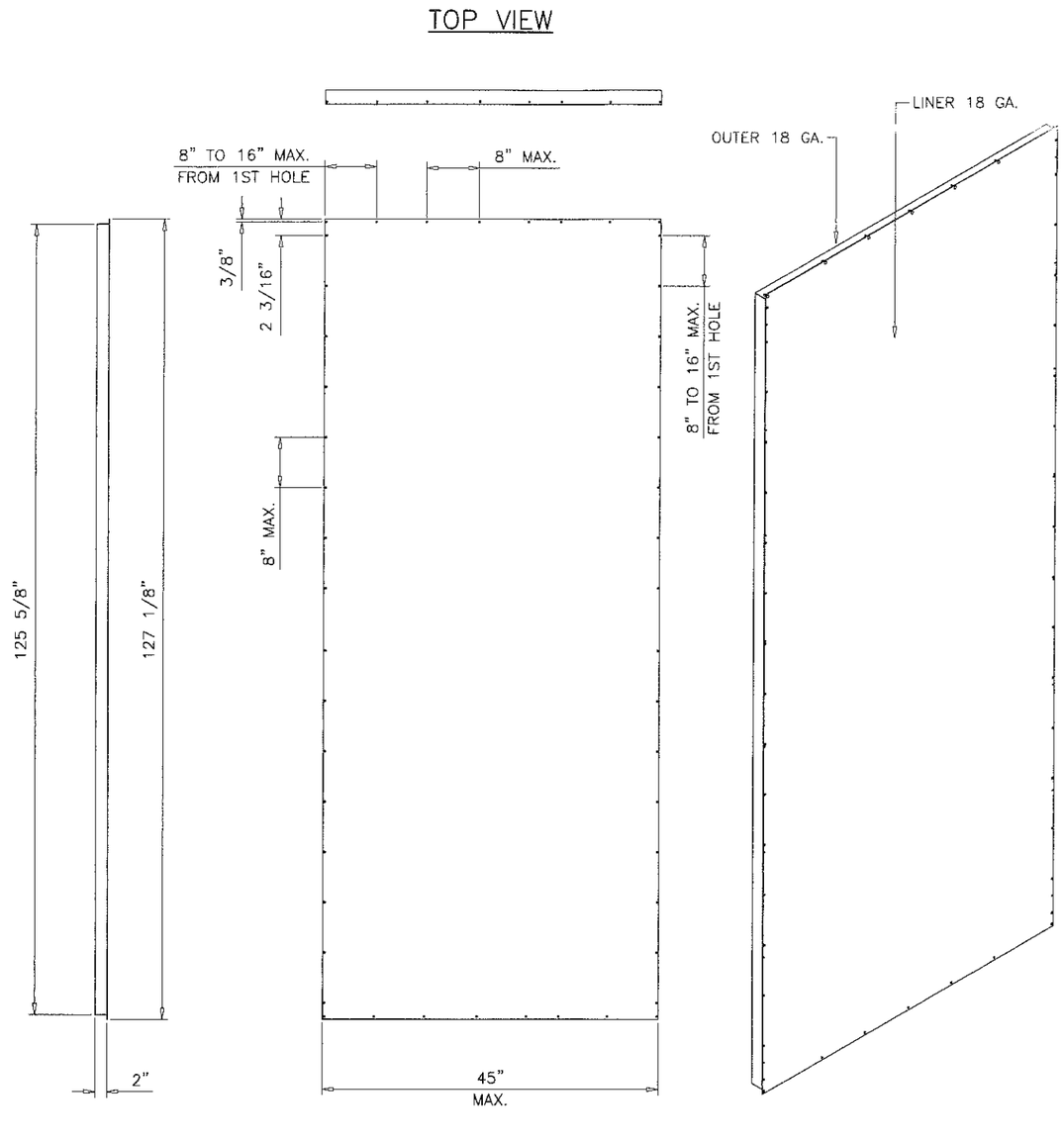

SOLUTION XT–54W
FLR/ROOF PANEL ASSY.

NOTE: SCREW SPACING AND LOCATIONS ARE INDICATED.

Engr: JAVAD AHMAD
CIVIL
FLA. PE # 70592
C.A.N. 3538
NOV 19 2015

PRODUCT REVISED
as complying with the Florida
Building Code
Acceptance No 15-1221.01
Expiration Date 12/21/2017
By
Miami Dade Product Control

AL-FAROOQ CORPORATION
ENGINEERS & PRODUCT DEVELOPMENT
1235 S.W. 87 AVE
MIAMI, FLORIDA 33174
TEL. (305) 264-8100 FAX. (305) 26 -6978

COOLER\06-11YIC

SOLUTION XT ROOFTOP AIR HANDLING UNIT

YORK/JOHNSON CONTROLS INC.
1499 EAST PHILADELPHIA STREET
YORK, PA. 17403
TEL. (717) 815-4198 FAX. (717) 815-4218

revisions:

no	date	by	description
A	11.05.07		REV. PER BCCO COMMENTS
B	03.03.09		NO CHANGE THIS SHEET
C	01.20.12		NO CHANGE THIS SHEET
E	08.22.15		NO CHANGE THIS SHEET

date: 10-13-06
scale: 1/2"=1-0"
dr. by: HAMID
chk. by:

drawing no.
06-11

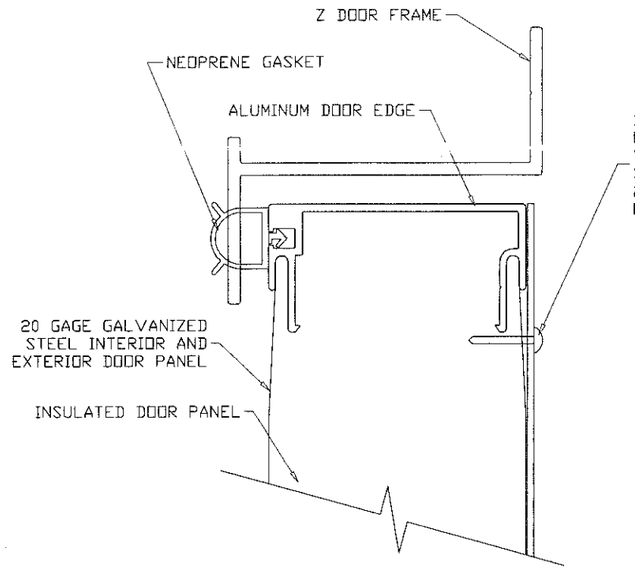

ENLARGED DOOR EDGE DETAIL

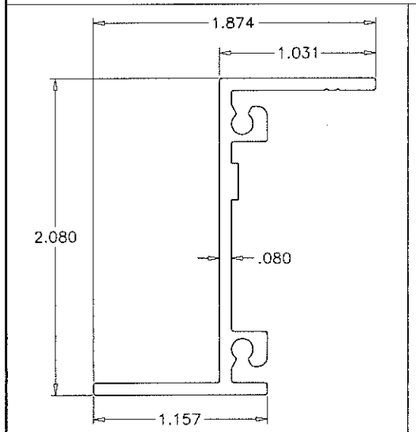

NON THERMAL VERTICAL Z FRAME
(6063-T5)

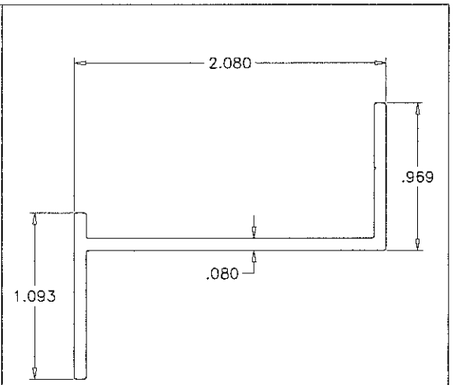

NON THERMAL HORIZONTAL Z FRAME
(6063-T5)

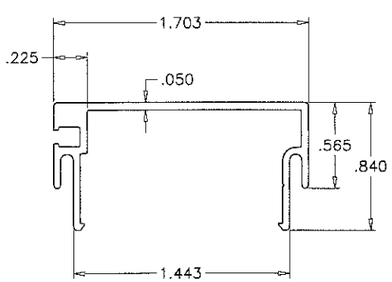

NON THERMAL DOOR PANEL EDGE EXTRUSION
(6063-T5)

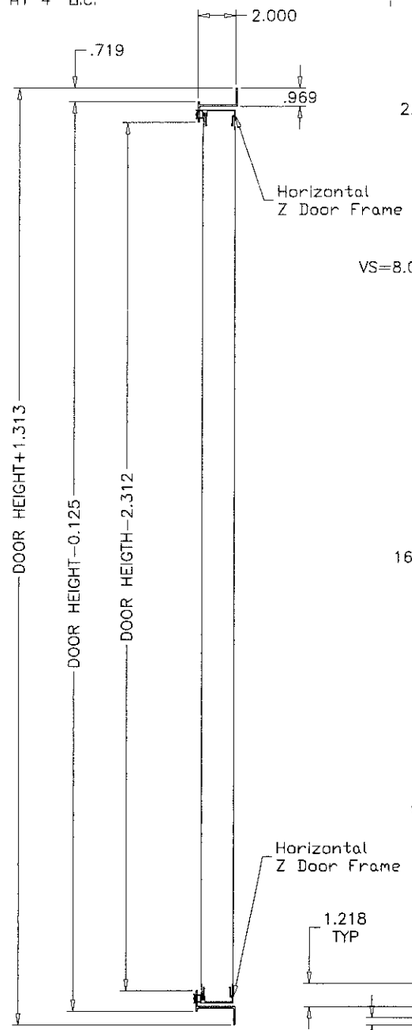

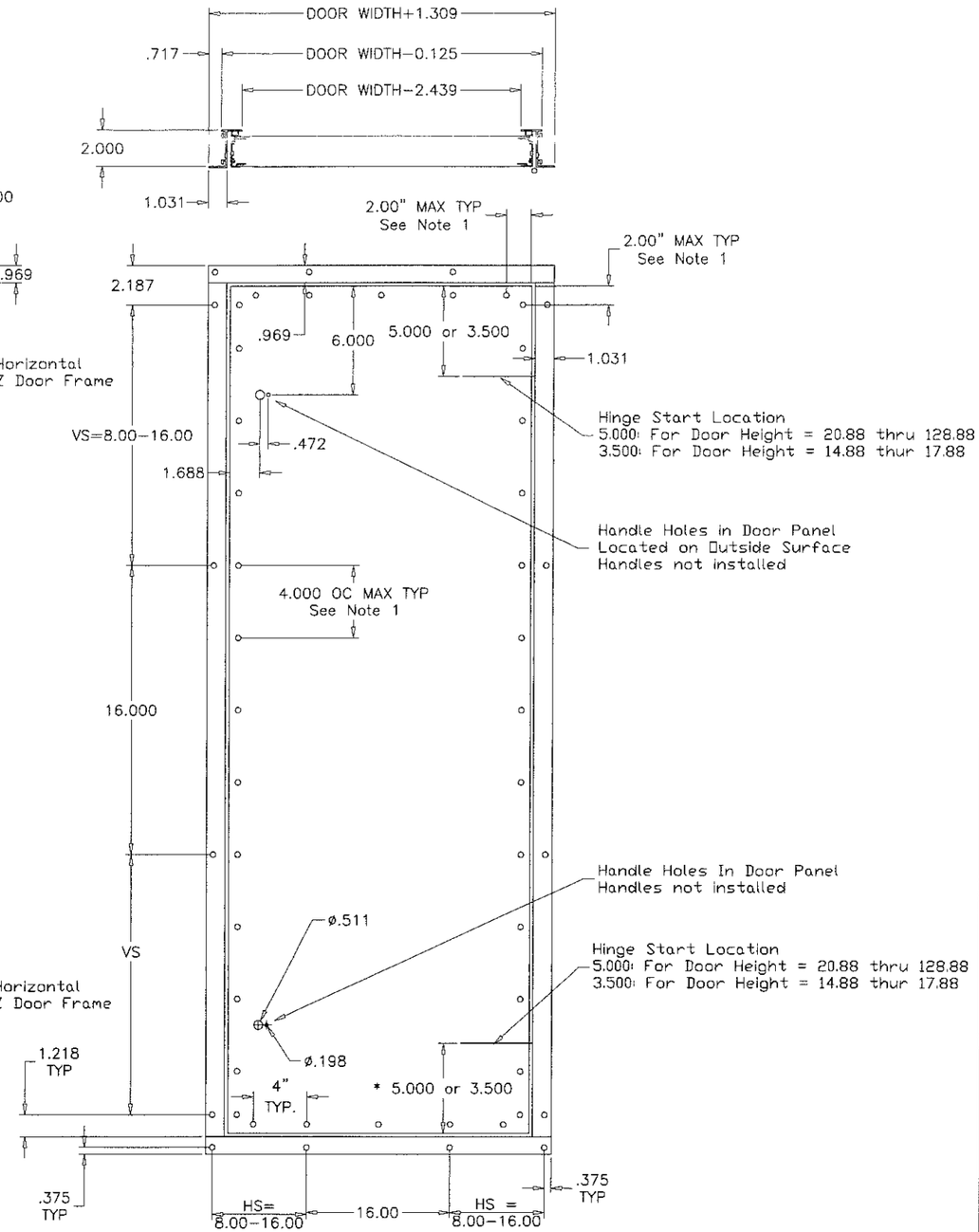

HINGES:
(2) HINGES FOR 14.88" TO 68.88" DOOR HEIGHTS POSITIONED 5" TO 3.5" FROM HINGE END TO DOOR TOP & BOTTOM.
(3) HINGES FOR 71.88" TO 128.88" DOOR HEIGHTS ONE HINGE AT CENTER OF DOOR, THE OTHER TWO 5" FROM HINGE END TO DOOR TOP & BOTTOM.

NOTES:
UNIT DOOR HEIGHT = UNIT HEIGHT - 6.125
PIPE CHASE DOOR HEIGTH = UNIT HEIGHT - 3.125

NOTE:
1. Access doors are 2.00" thick, double-wall construction of galvanized sheet steel. The interior and exterior liner construction shall conssit of 20 gage sheet steel. Additionally, an 18 gage steel exterior panel shall be secred to the access door with #14 x 3/4" self-tapping sheet metal screws spaced 2" from the edge and at 4" O.C.

SOLUTION XT ACCESS DOOR OPTION #1

Engr: JAVAD AHMAD
CIVIL
FLA. PE # 70592
C.A.N. 3538
NOV 0 9 2006

PRODUCT REVISED
as complying with the Florida Building Code
Acceptance No 15-1221.01
Expiration Date 12/21/2017
By
Miami Dade Product Control

AL-FAROOQ CORPORATION
ENGINEERS & PRODUCT DEVELOPMENT
1235 S.W. 87 AVE
MIAMI, FLORIDA 33174
TEL. (305) 264-8100 FAX. (305) 264-6978

COOLER\06-11YIC

SOLUTION XT ROOFTOP AIR HANDLING UNIT

YORK/JOHNSON CONTROLS INC.
1499 EAST PHILADELPHIA STREET
YORK, PA. 17403
TEL. (717) 815-4198 FAX. (717) 815-4218

revisions:

no	date	by	description
A	11.05.07		REV. PER BCCO COMMENTS
B	03.03.09		NO CHANGE THIS SHEET
C	01.20.12		NO CHANGE THIS SHEET
E	08.22.15		NO CHANGE THIS SHEET

date: 10-13-06
scale: 1/8" = 1"
dr. by: HAMID
chk. by:

drawing no.
06-11

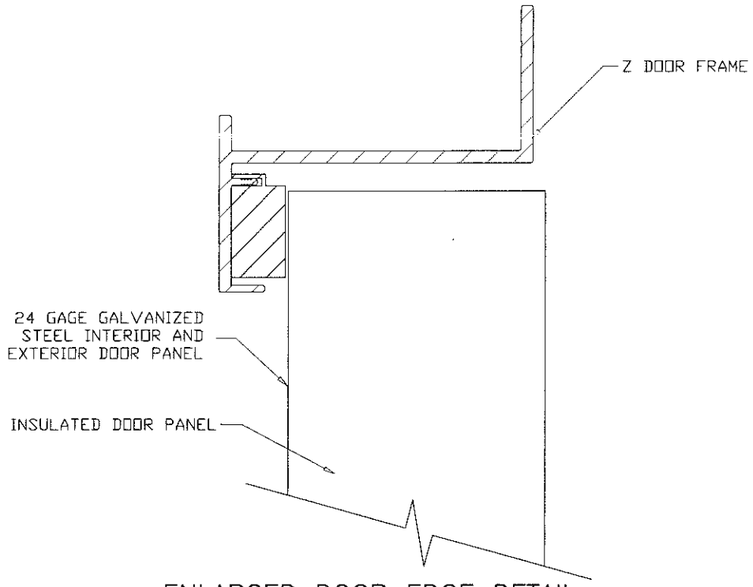

ENLARGED DOOR EDGE DETAIL

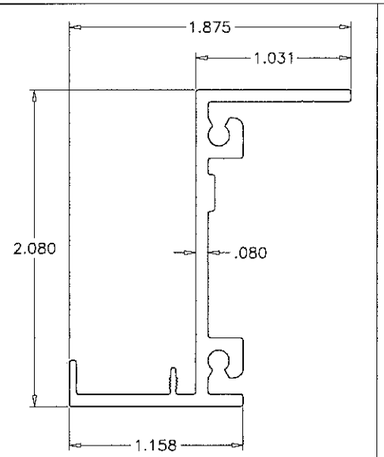

NON THERMAL VERTICAL Z FRAME
(6063-T5)

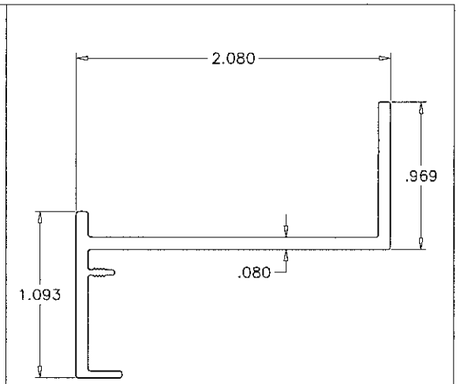

NON THERMAL HORIZONTAL Z FRAME
(6063-T5)

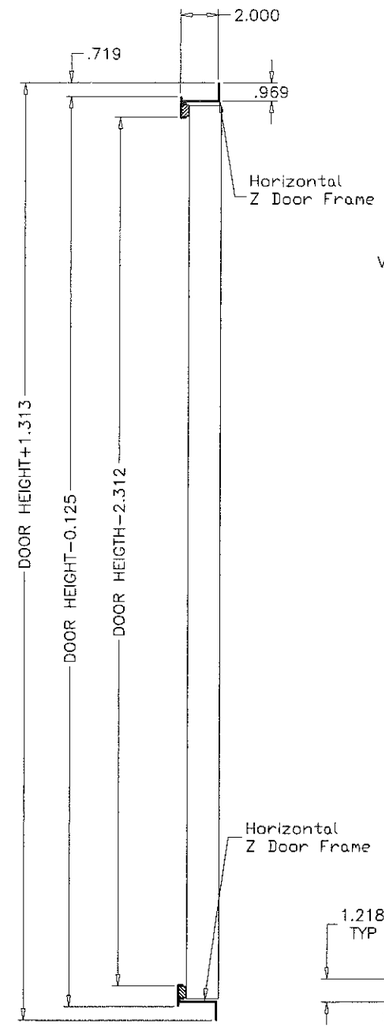

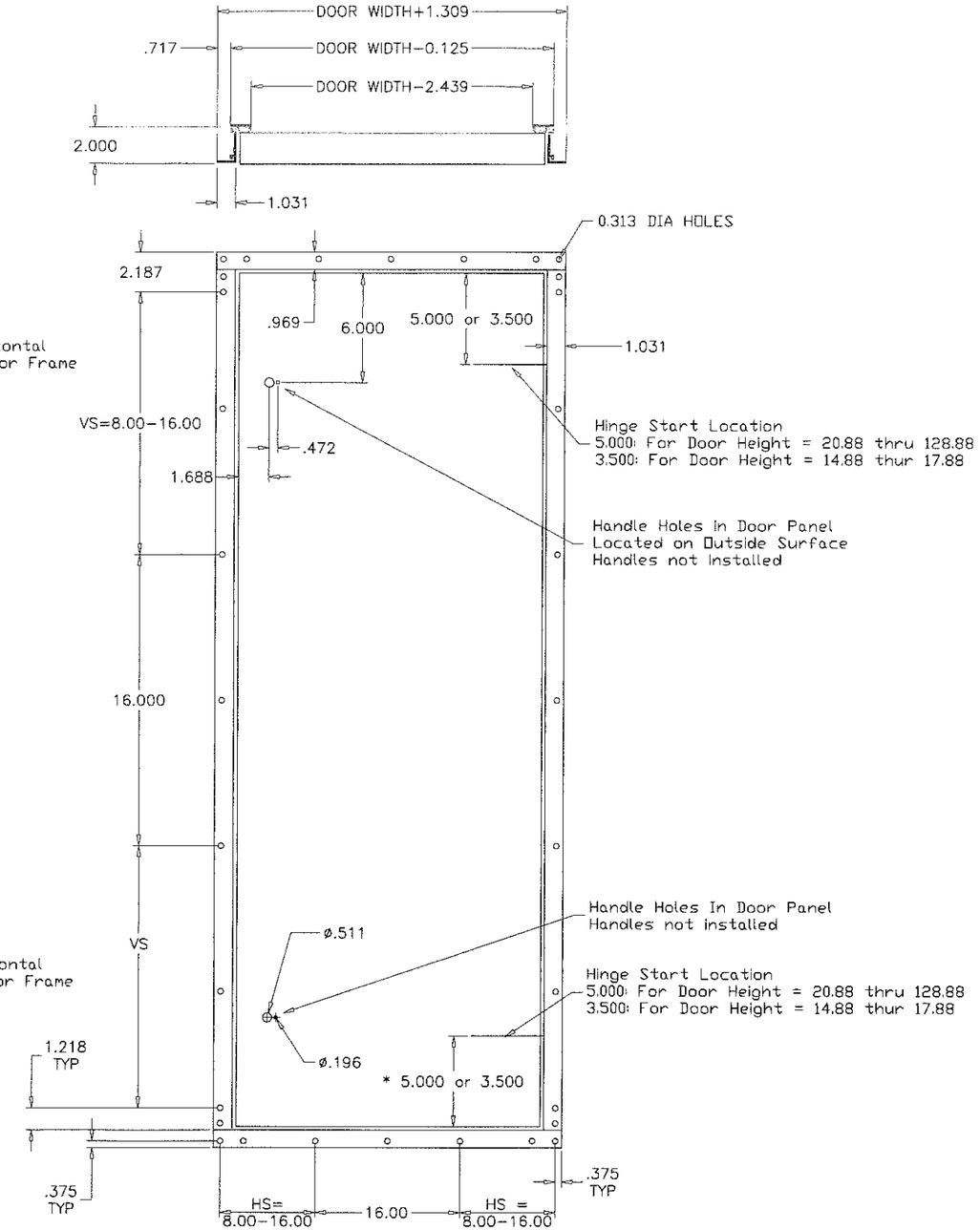

HINGES:
(2) HINGES FOR 14.88" TO 68.88" DOOR HEIGHTS POSITIONED 5" TO 3.5" FROM HINGE END TO DOOR TOP & BOTTOM.
(3) HINGES FOR 71.88" TO 128.88" DOOR HEIGHTS
ONE HINGE AT CENTER OF DOOR, THE OTHER TWO 5" FROM HINGE END TO DOOR TOP & BOTTOM.

NOTES:
UNIT DOOR HEIGHT = UNIT HEIGHT – 6.125
PIPE CHASE DOOR HEIGTH = UNIT HEIGHT – 3.125

NOTE:
1. Access doors are 2.00" thick, double-wall construction of galvanized sheet steel. The interior and exterior liner construction shall conssit of 24 gage sheet steel.
2. View area not available on Doors used for NOA consturstd units.
3. Door must show no water leakage at 6.0" W.C and no air leakage at negative 8.0" W.C

SOLUTION XT
ACCESS DOOR
OPTION #2

Engr: JAVAD AHMAD
CIVIL
FLA. PE # 70592
C.A.N. 3538
NOV 19 2008

PRODUCT REVISED
as complying with the Florida Building Code
Acceptance No 15-1221.01
Expiration Date 12/21/2017
By
Miami Dade Product Control

AL-FAROOQ CORPORATION
ENGINEERS & PRODUCT DEVELOPMENT
1235 S.W. 87 AVE
MIAMI, FLORIDA 33174
TEL. (305) 264-8100 FAX. (305) 26.-6978

COOLER\06-11YIC

SOLUTION XT ROOFTOP AIR HANDLING UNIT

YORK/JOHNSON CONTROLS INC.
1499 EAST PHILADELPHIA STREET
YORK, PA. 17403
TEL. (717) 815-4218 FAX. (717) 815-4198

revisions:

no	date	by	description
A	11.05.07		REV. PER BCCO COMMENTS
B	03.03.09		NO CHANGE THIS SHEET
C	01.20.12		NO CHANGE THIS SHEET
E	08.22.15		NO CHANGE THIS SHEET

date: 10-13-06
scale: 1/8" = 1"
dr. by: HAMID
chk. by:

drawing no.
06-11

NOTES:
1. INSIDE DOOR HANDLES ARE OPTIONAL ON INDIVIDUAL DOOR LATCHES

2. INSIDE DOOR HANDLES ARE OPTIONAL ON SINGLE POINT, MULT-LATCH DOORS

3. NSIDE DOOR HANDLES ARE NOT AVAILABLE ON FF, AF, RF, HF & DI SEGMENTS.

** QTY OF DOOR LATCHES

QTY	DOOR HEIGHT
2	20.88" – 68.88"
3	71.88" – 128.88"

	ITEM	QTY	PART NO.	DESCRIPTION
STANDARD	1	**	034-12001-001	NL L-HANDLE W/SCREW&PLASTIC CAP
OPTIONAL	1	**	034-12001-007	KL L-HANDLE W/SCREW&PLASTIC CAP
OPTIONAL	1	**	034-12001-011	PL L-HANDLE W/SCREW&PLASTIC CAP
	2	**	034-12002-001	MECHANISM, LATCHING
	3	**	034-12002-011	CAM, ROLLER SNUB NOSE
OPTIONAL	4	**	034-12001-035	INSIDE HANDLE W/PLASTIC GRIP
	5	**	034-12002-007	COVER PLUG FOR LOCK
	6	**	034-12002-010	ADAPTER, LINKAGE
	7	**	088-02023-XXX	ROD, 0.315" DIA XX LONG ZINC PLATED
	8	**	029-22088-001	CAM, ROLLER 0.708 DIA

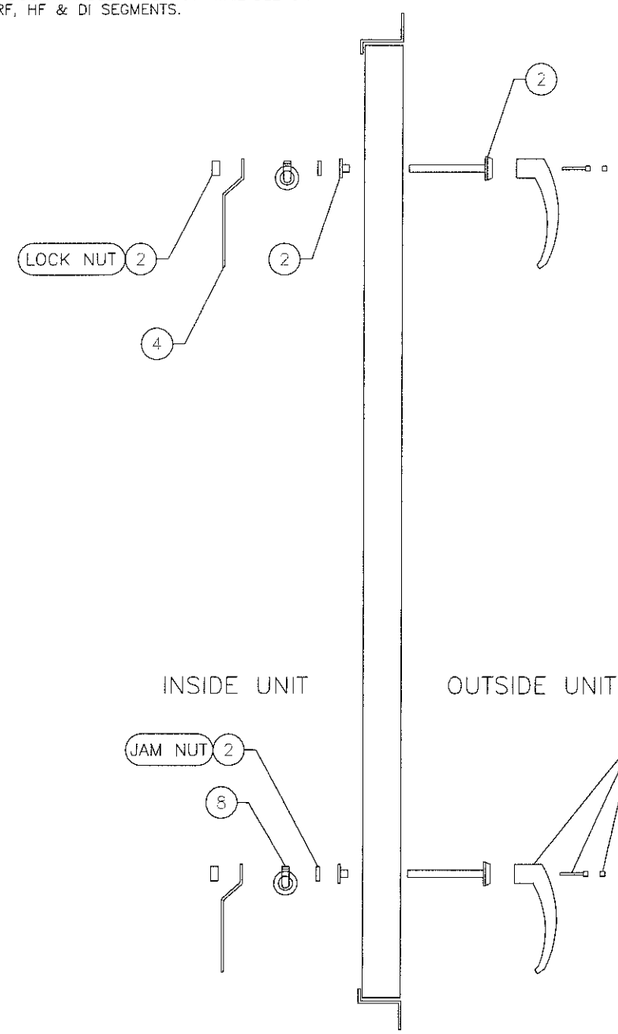

STANDARD DOOR
OUT SWING

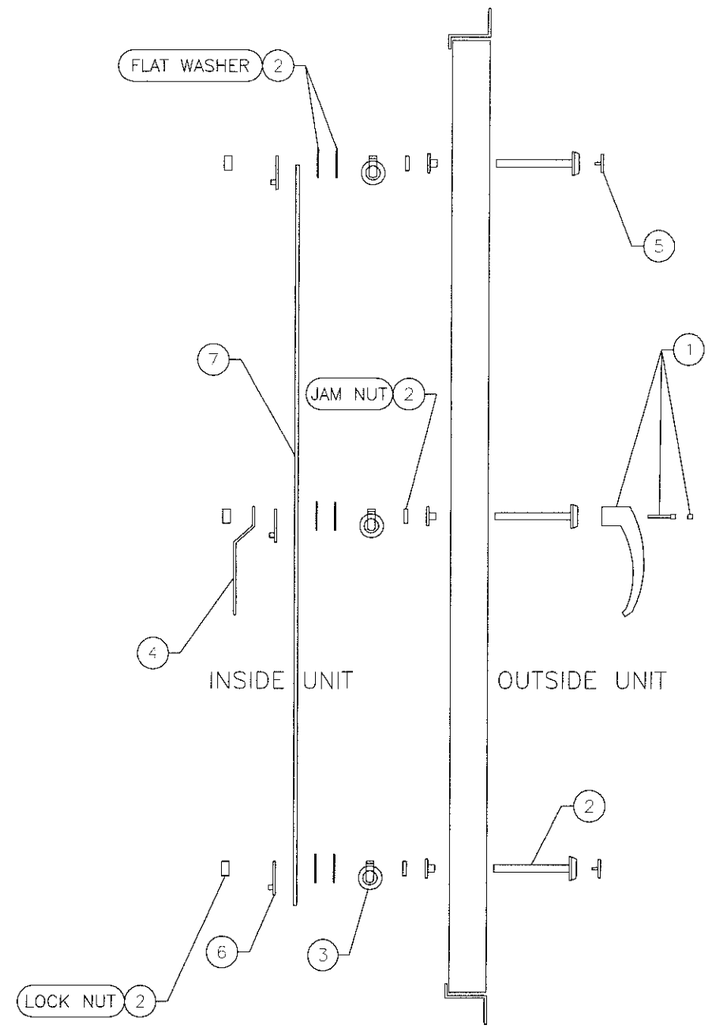

STANDARD DOOR
MULTI-POINT OUT SWING

*NOTE:
MULTIPLY QUANTITIES OF EACH ITEM ABOVE BY QUANTITY OF DOOR LATCHES BELOW TO GET PROPER QUANTITIES FOR THE VARIOUS DOOR HEIGHTS.

ROD LENGTH
FOR DOOR HEIGHTS

DASH #	LENGTH	DOOR HEIGHT
001	10"	20.88"
002	13"	23.88"
003	16"	26.88"
004	19"	29.88"
005	22"	32.88"
006	25"	35.88"
007	28"	38.88"
008	31"	41.88"
009	34"	44.88"
010	37"	47.88"
011	40"	50.88"
012	43"	53.88"
013	46"	56.88"
014	49"	59.88"
015	52"	62.88"
016	55"	65.88"
017	58"	68.88"
018	61"	71.88"
019	64"	74.88"
020	67"	77.88"
021	70"	80.88"
022	73"	83.88"
023	76"	86.88"
024	79"	89.88"
025	82"	92.88"
026	85"	95.88"
027	88"	97.88"
028	91"	101.88"
029	94"	104.88"
030	97"	107.88"
031	100"	110.88"
032	103"	113.88"
033	106"	116.88"
034	109"	119.88"
035	112"	122.88"
036	115"	125.88"
037	118"	128.88"

LATCHING PARTS
OUT SWING DOOR

Engr: JAVAD AHMAD
CIVIL
FLA. PE # 70592
C.A.N. 3538
NOV 29 2005

PRODUCT REVISED
as complying with the Florida Building Code
Acceptance No 15-1221.01
Expiration Date 12/21/2017
By
Miami Dade Product Control

AL-FAROOQ CORPORATION
ENGINEERS & PRODUCT DEVELOPMENT
1235 S.W. 87 AVE
MIAMI, FLORIDA 33174
TEL. (305) 264-8100 FAX. (305) 264-6978

COOLER\06-11YIC

SOLUTION XT ROOFTOP AIR HANDLING UNIT

YORK/JOHNSON CONTROLS INC.
1499 EAST PHILADELPHIA STREET
YORK, PA. 17403
TEL. (717) 815-4218 FAX. (717) 815-4198

revisions:

no	date	by	description
A	11.05.07		REV. PER BCCO COMMENTS
B	03.03.09		NO CHANGE THIS SHEET
C	01.20.12		NO CHANGE THIS SHEET
E	08.22.15		NO CHANGE THIS SHEET

date: 10-13-06
scale: –
dr. by: HAMID
chk. by:

drawing no.
06-11

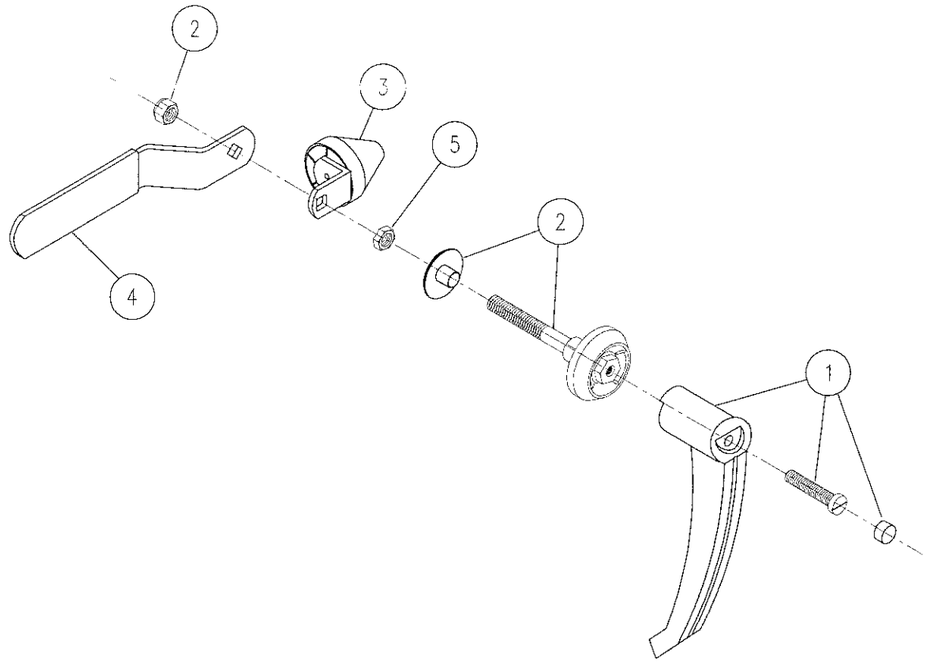

NOTES:
1. CLOCKWISE ROTATION IS SHOWN. MIRROR ASSY FOR COUNTER-CLOCKWISE ROTATION.

ITEM	PART NO.	DESCRIPTION	QTY/ ASSY	REF. DWG.
	391 20016 001	2" OS LATCH ASSY PLT		
1	029 23801 010	DOOR HANDLE 265076-00	1	
2	029 23801 012	DOOR LATCH HOUSING 265078-S50	1	
3	029 23801 013	DOOR ROLLER CAM 2321S07-R01	1	
4	029 23801 015	DOOR INSIDE HANDLE 265076-50	1	
5	021 30415 001	NUT,JAM,PLTD,.22THK,.38-16	1	

LATCH ASSEMBLY WITH PLATED FASTENERS OUT SWING DOOR

Material: 16 GA, #304 Stainless Steel

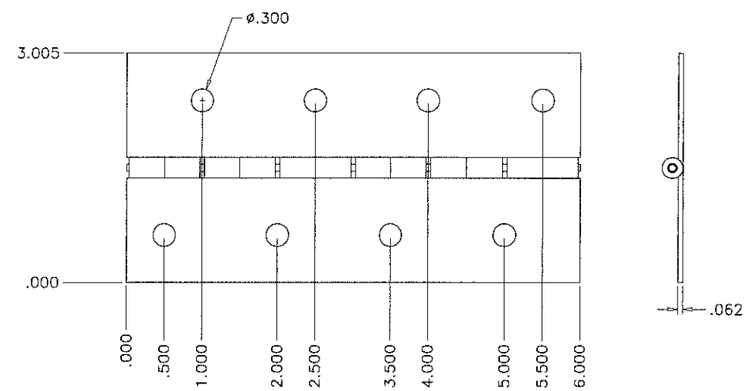

HINGE

Engr: JAVAD AHMAD
CIVIL
FLA. PE # 70592
C.A.N. 3538
NOV 0 2005

PRODUCT REVISED
as complying with the Florida Building Code
Acceptance No 15-1221.01
Expiration Date 12/21/2017
By
Miami Dade Product Control

AL-FAROOQ CORPORATION
ENGINEERS & PRODUCT DEVELOPMENT
1235 S.W. 87 AVE
MIAMI, FLORIDA 33174
TEL. (305) 264-8100 FAX. (305) 26 -6978

COOLER\06-11YIC

SOLUTION XT ROOFTOP AIR HANDLING UNIT

YORK/JOHNSON CONTROLS INC.
1499 EAST PHILADELPHIA STREET
YORK, PA. 17403
TEL. (717) 815-4218 FAX. (717) 815-4198

revisions:

no	date	by	description
A	11.05.07		REV. PER BCCO COMMENTS
B	03.03.09		NO CHANGE THIS SHEET
C	01.20.12		NO CHANGE THIS SHEET
E	08.22.15		NO CHANGE THIS SHEET

date: 10-13-06
scale: -
dr. by: HAMID
chk. by:

drawing no.
06-11

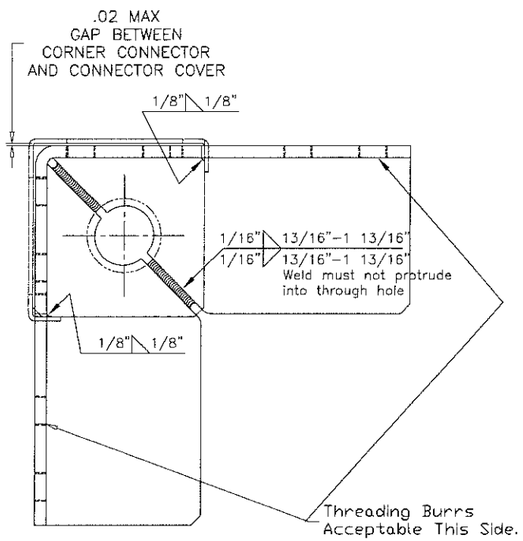

TOP VIEW

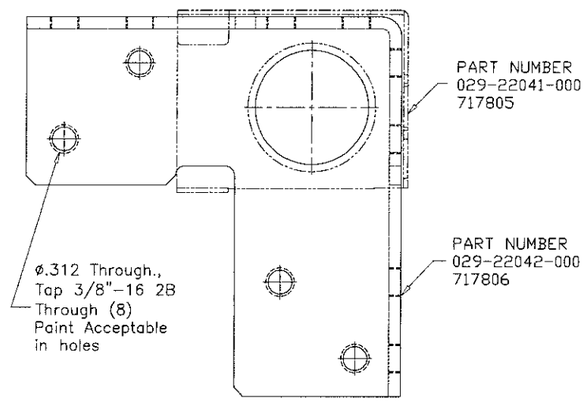

EXTERIOR SIDE VIEW

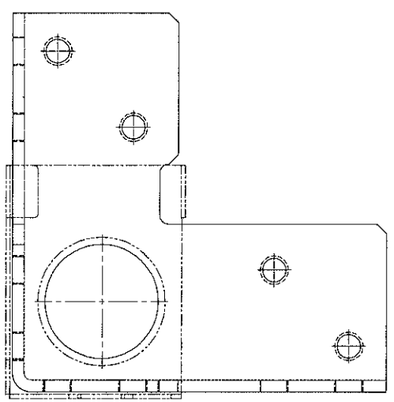

INTERIOR SIDE VIEW

Notes:

1) Gap can not accept 1/2" wide feeler stock.

2) Finish - Annodized Silver Powder Coat Paint.

3) Sub-component dimensions are prior to paint.

4) 8 gage stamped and formed galvanized steel corner

CORNER CONNECTOR
DETAIL
1/2" = 1"

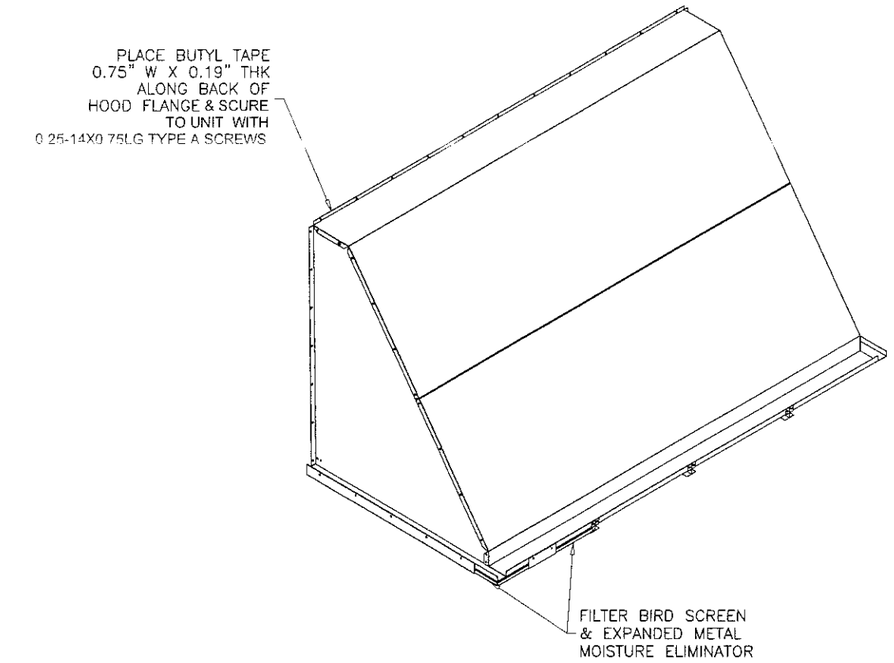

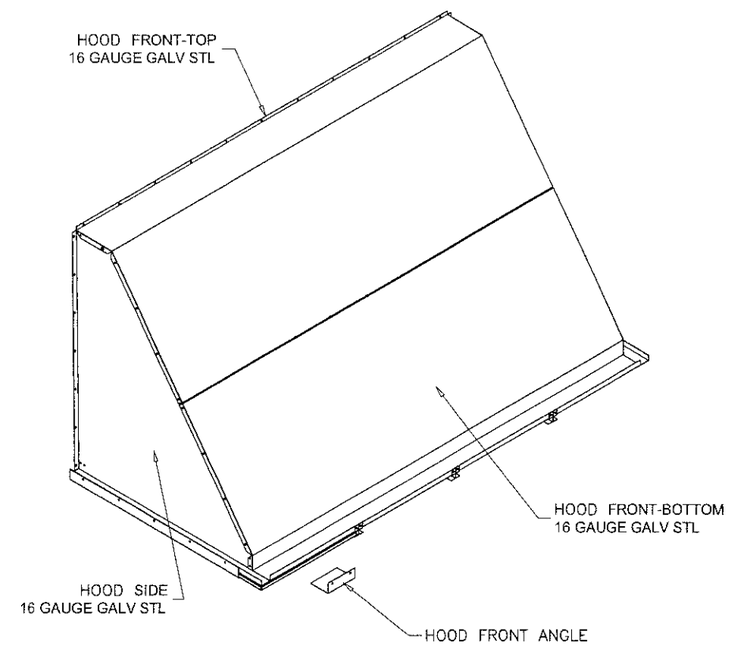

OUTDOOR AIR
HOOD ASSEMBLY
1/2" = 1'-0"

Engr: JAVAD AHMAD
CIVIL
FLA. PE # 70592
C.A.N. 3538
NOV 09 2015

PRODUCT REVISED
as complying with the Florida
Building Code
Acceptance No 15-1221.01
Expiration Date 12/31/2017
By
Miami Dade Product Control

AL-FAROOQ CORPORATION
ENGINEERS & PRODUCT DEVELOPMENT
1235 S.W. 87 AVE
MIAMI, FLORIDA 33174
TEL. (305) 264-8100 FAX. (305) 26:-6978

COOLER\06-11YIC

SOLUTION XT ROOFTOP AIR HANDLING UNIT

YORK/JOHNSON CONTROLS INC.
1499 EAST PHILADELPHIA STREET
YORK, PA. 17403
TEL. (717) 815-4198 FAX. (717) 815-4218

revisions:

no	date	by	description
A	11.05.07		REV. PER BCCO COMMENTS
B	03.03.09		NO CHANGE THIS SHEET
C	01.20.12		NO CHANGE THIS SHEET
E	08.22.15		NO CHANGE THIS SHEET

date: 10-13-06
scale: -
dr. by: HAMID
chk. by:

drawing no.
06-11

sheet 15 of 16

PARTS LIST			
ITEM	DRAWING NO.	ITEM DESCRIPTION	QTY.
1	207931	ENCLOSURE ASSEMBLY	1
2	207935	ENCLOSURE TOP CAP	1
3	207936	UNIT VENT PLATE	1
4	207937	BASE PANEL	1
5	207938	ENCLOSURE DOOR	1
6	207942	MOUNTING RAIL	2
7	207943	SUN SHIELD (DOOR)	1
8	207827	GRILLE	1

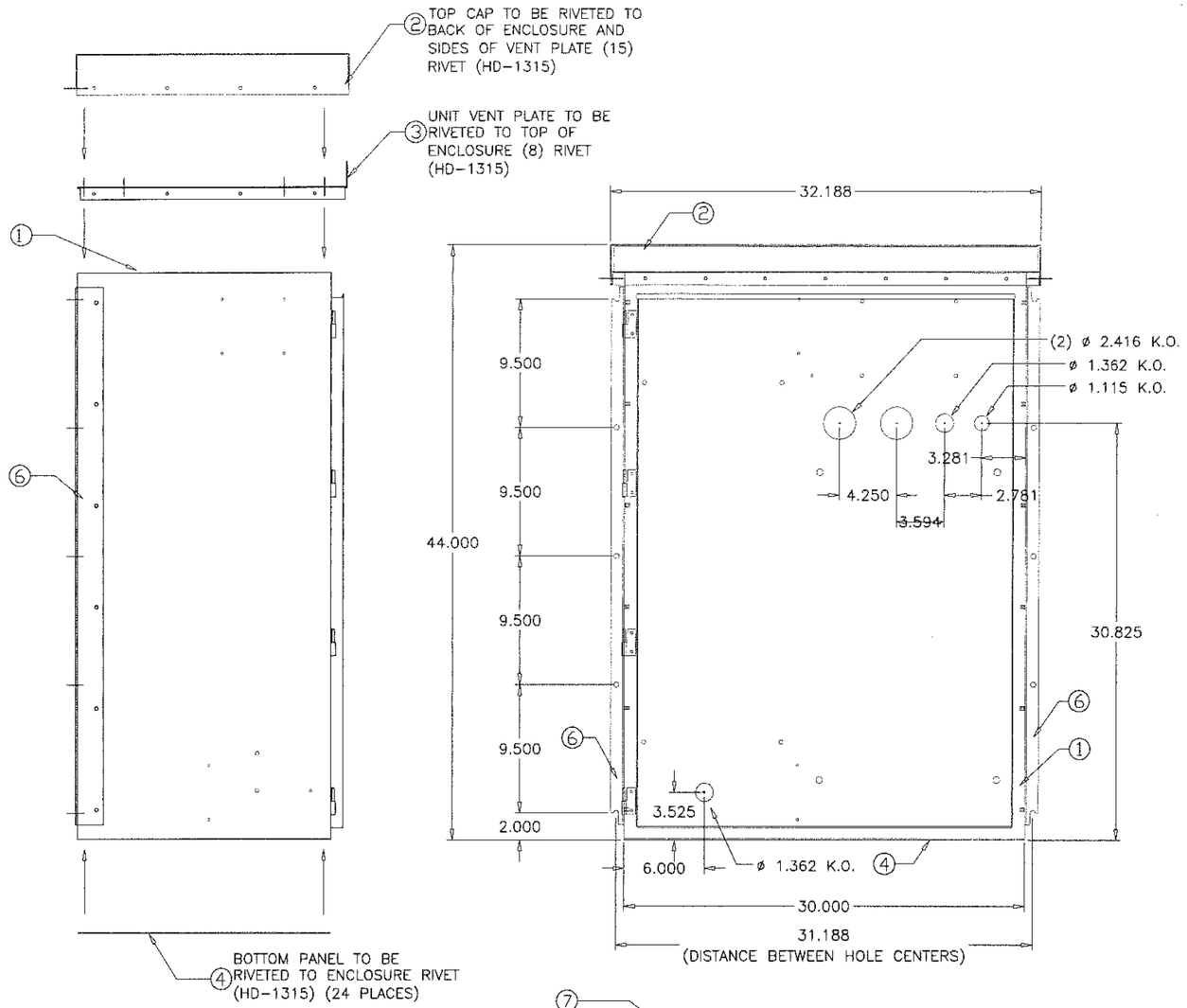

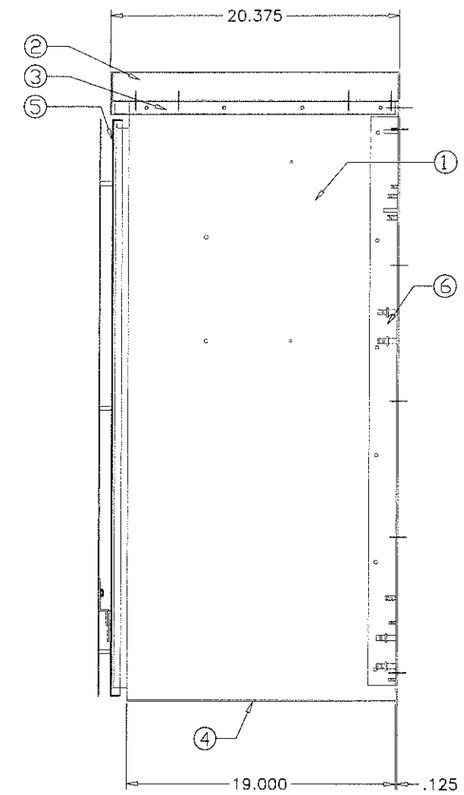

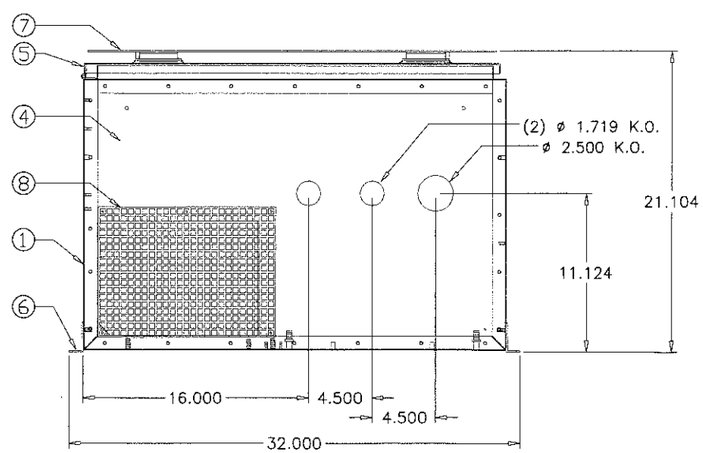

VENTED NEMA 3R
ENCLOSURE ASSEMBLY

Engr: JAVAD AHMAD
CIVIL
FLA. PE # 70592
C.A.N. 3538
NOV 09 2015

PRODUCT REVISED
as complying with the Florida Building Code
Acceptance No 15-1221.01
Expiration Date 12/21/2017
By
Miami Dade Product Control

AL-FAROOQ CORPORATION
ENGINEERS & PRODUCT DEVELOPMENT
1235 S.W. 87 AVE
MIAMI, FLORIDA 33174
TEL. (305) 264-8100 FAX. (305) 26?-6978
COOLER\06-11YIC

SOLUTION XT ROOFTOP AIR HANDLING UNIT

YORK/JOHNSON CONTROLS INC.
1499 EAST PHILADELPHIA STREET
YORK, PA. 17403
TEL. (717) 815-4218 FAX. (717) 815-4198

revisions:			
no	date	by	description
A	11.05.07		NO CHANGE THIS SHEET
B	03.03.09		NO CHANGE THIS SHEET
C	01.20.12		NO CHANGE THIS SHEET
E	08.22.15		NO CHANGE THIS SHEET

date: 10-13-06
scale: 3/32" = 1"
dr. by: HAMID
chk. by:

drawing no.
06-11

sheet 16 of 16