MIAMI-DADE COUNTY
PRODUCT CONTROL SECTION
11805 SW 26 Street, Room 208
Miami, Florida 33175-2474
T (786) 315-2590 F (786) 315-2599
www.miamidade.gov/economy

DEPARTMENT OF REGULATORY AND ECONOMIC RESOURCES (RER)
BOARD AND CODE ADMINISTRATION DIVISION

NOTICE OF ACCEPTANCE (NOA)

Overhead Door Corporation
2501 South State Hwy. 121, Suite 200
Lewisville, Texas 75067

SCOPE: This NOA is being issued under the applicable rules and regulations governing the use of construction materials. The documentation submitted has been reviewed and accepted by Miami-Dade County RER-Product Control Section to be used in Miami Dade County and other areas where allowed by the Authority Having Jurisdiction (AHJ). This NOA shall not be valid after the expiration date stated below. The Miami-Dade County Product Control Section (In Miami Dade County) and/or the AHJ (in areas other than Miami Dade County) reserve the right to have this product or material tested for quality assurance purposes. If this product or material fails to perform in the accepted manner, the manufacturer will incur the expense of such testing and the AHJ may immediately revoke, modify, or suspend the use of such product or material within their jurisdiction. RER reserves the right to revoke this acceptance, if it is determined by Miami-Dade County Product Control Section that this product or material fails to meet the requirements of the applicable building code.
This product is approved as described herein, and has been designed to comply with the Florida Building Code, including the High Velocity Hurricane Zone.

DESCRIPTION: Models 5745/5765/7565/515/525 Insulated Steel Sectional Garage Door up to 9'-2" Wide with Optional Impact Resistant Glazing (DP +64.0, -72.0 PSF)

APPROVAL DOCUMENT: Drawing No. **411343**, titled "Series 5745/5765/7565/515/525", sheets 1 through 4 of 4, dated 06/20/2014, prepared by Overhead Door Corporation, signed and sealed by Mark A. Sawicki, P.E. on 12/17/2015, bearing the Miami-Dade County Product Control revision stamp with the Notice of Acceptance number and expiration date by the Miami-Dade County Product Control Section.

MISSILE IMPACT RATING: Large and Small Missile Impact Resistant

LABELING: A permanent label with the manufacturer's name or logo, manufacturing addresses in Pensacola, FL or Mt. Hope, OH, model number, the positive and negative design pressure rating, indicate impact rated if applicable, installation instruction drawing reference number, approval number (NOA), the applicable test standards, and the statement reading 'Miami-Dade County Product Control Approved' is to be located on the door's side track, bottom angle, or inner surface of a panel.

LIMITATION: This door has not been tested for air infiltration.

RENEWAL of this NOA shall be considered after a renewal application has been filed and there has been no change in the applicable building code negatively affecting the performance of this product.

TERMINATION of this NOA will occur after the expiration date or if there has been a revision or change in the materials, use, and/or manufacture of the product or process. Misuse of this NOA as an endorsement of any product, for sales, advertising or any other purposes shall automatically terminate this NOA. Failure to comply with any section of this NOA shall be cause for termination and removal of NOA.

ADVERTISEMENT: The NOA number preceded by the words Miami-Dade County, Florida, and followed by the expiration date may be displayed in advertising literature. If any portion of the NOA is displayed, then it shall be done in its entirety.

INSPECTION: A copy of this entire NOA shall be provided to the user by the manufacturer or its distributors and shall be available for inspection at the job site at the request of the Building Official.
This NOA **revises NOA # 14-0204.07** and consists of this page 1 and evidence pages E-1 and E-2, as well as approval document mentioned above.
The submitted documentation was reviewed by **Carlos M. Utrera, P.E.**

MIAMI-DADE COUNTY APPROVED

04/18/2016

NOA No. 15-1228.09
Expiration Date: December 4, 2019
Approval Date: April 28, 2016

NOTICE OF ACCEPTANCE: EVIDENCE SUBMITTED

A. DRAWINGS

1. Drawing No. **411343**, titled "Series 5745/5765/7565/515/525", sheets 1 through 4 of 4, dated 06/20/2014, prepared by Overhead Door Corporation, signed and sealed by Mark A. Sawicki, P.E. on 12/17/2015.

B. TESTS *"Submitted under NOA # 14-0204.07"*

1. Test reports on 1) Uniform Static Air Pressure Test, Loading per FBC TAS 202-94
2) Large Missile Impact Test per FBC, TAS 201-94
3) Cyclic Wind Pressure Loading per FBC, TAS 203-94
4) Forced Entry Test, per FBC, TAS 202-94
5) Tensile Test per ASTM E8

along with marked-up drawings and installation diagram of Series 8300, Option Code 2207, 9'2"x 8' Sectional Garage Doors (issued to Overhead Door Corporation), prepared by Architectural Testing, Inc., Test Report No. **C9367.02-801-18**, dated 10/04/2013, revision 1 dated 02/21/2014, signed and sealed by Shawn G. Collins, P.E.

2. Addendum letter to Architectural Testing, Inc. Test Report # **C9367.01-801-18**, dated 07/07/2014, signed and sealed by Vinu J. Abraham, P.E.

3. Test reports on 1) Uniform Static Air Pressure Test, Loading per FBC TAS 202-94
2) Large Missile Impact Test per FBC, TAS 201-94
3) Cyclic Wind Pressure Loading per FBC, TAS 203-94
4) Forced Entry Test, per FBC, TAS 202-94
5) Tensile Test per ASTM E8

along with marked-up drawings and installation diagram of Series 8300, Option Code 2207, 9'2"x 8', Sectional Garage Doors (issued to Wayne Dalton), prepared by Architectural Testing, Inc., Test Report No. **C9367.01-801-18**, dated 10/04/2013, signed and sealed by Vinu J. Abraham, P.E.

4. Test report on Salt Fog Spray per ASTM B117 prepared by Environmental Testing Laboratory, Inc., Test Report No. **12732**, dated 06/22/2013, signed by Brady Richard.

04/18/2016

Carlos M. Utrera, P.E.
Product Control Examiner
NOA No. 15-1228.09
Expiration Date: December 4, 2019
Approval Date: April 28, 2016

NOTICE OF ACCEPTANCE: EVIDENCE SUBMITTED

C. CALCULATIONS *"Submitted under NOA # 14-0204.07"*

1. Structural and anchor calculations prepared by Overhead Door Corporation, dated 06/26/2014, signed and sealed by Mark A. Sawicki, P.E.
2. Structural and anchor calculations prepared by Overhead Door Corporation, dated 01/28/2014, signed and sealed by Mark A. Sawicki, P.E.

D. QUALITY ASSURANCE

1. Miami-Dade Department of Regulatory and Economic Resources (RER)

E. MATERIAL CERTIFICATIONS *"Submitted under NOA # 14-0204.07"*

1. Test report on flame spread and smoke developed of BASF polyurethane foam per ASTM E84, Test Report # RJ1980-3, dated 07/20/2012, prepared by QAI Laboratories, signed by Greg Banasky.
2. Test report on ignition temperature of BASF polyurethane foam per ASTM D1929, Test Report # 01.17794.01.304, dated 12/20/2012, prepared by Southwest Research Institute, signed by Matthew S. Blais.
3. Notice of Acceptance No. 12-0605.05 issued to Bayer MaterialScience LLC (MA) for its Makrolon Polycarbonate Sheets, approved on 12/06/2012 and expiring on 08/27/2017.

F. STATEMENTS

1. Statement letter of code conformance to the 5th edition (2014) FBC issued by Overhead Door Corporation, dated 12/15/2015, signed and sealed by Mark A. Sawicki, P.E.

   "Submitted under NOA # 14-0204.07"

2. Statement letter of code conformance to 2010 FBC issued by Overhead Door Corporation, dated 01/24/2014, signed and sealed by Mark A. Sawicki, P.E.
3. Statement letter of no financial interest issued by Overhead Door Corporation, dated 01/24/2014, signed and sealed by Mark A. Sawicki, P.E.

04/18/2016

Carlos M. Utrera, P.E.
Product Control Examiner
NOA No. 15-1228.09
Expiration Date: December 4, 2019
Approval Date: April 28, 2016

NOTES:

1. IMPACT RESISTANT GLAZING OPTION – IMPACT RESISTANT GLAZING SYSTEM MAY BE INSTALLED IN TOP OR INTERMEDIATE SECTION (WITH OR WITHOUT DECORATIVE INSERTS). GLAZING SHALL BE 1/4" POLYCARBONATE. MAXIMUM GLAZING DIMENSIONS SHALL BE 14" x 46" CUTOUT, FASTENED WITH A MINIMUM #8 X 1" SMS: 3X ALONG THE HORIZONTAL AND 3X ALONG THE VERTICAL. THE MINIMUM BITE SHALL BE .375". SEE DETAIL E ON SHEET 3 FOR ASSEMBLY DETAILS.

2. VINYL OR WOOD DOOR STOP NAILED A MAXIMUM OF 6" O.C. MUST OVERLAP TOP AND BOTH ENDS OF PANELS MINIMUM 7/16" TO MEET NEGATIVE PRESSURES.

3. KEY LOCKS, SLIDE LOCKS, OR OPERATOR REQUIRED.

4. LOUVER OPTION – LOUVERS MAY BE INSTALLED IN DOOR IF THE AREA OF EACH LOUVER DOES NOT EXCEED 60 IN². DOOR VENTS LARGER THAN 60 IN² MUST BE TESTED FOR IMPACT.

5. POLYURETHANE FOAM SHALL BE SANDWICHED BETWEEN FACER STEEL HAVING A MINIMUM 26 GA THICKNESS G–40 WITH PRIME COAT WITH A MINIMUM YIELD STRENGTH OF 46.8 KSI AND BACKER STEEL HAVING A MINIMUM 29 GA THICKNESS G–40 WITH PRIME COAT. OVERALL SECTION THICKNESS SHALL BE MINIMUM 1–5/16".

6. A 4–1/2" x 6" x 22 GA BACKER PLATE IS TO BE LOCATED AT EVERY INTERMEDIATE AND OUTER END HINGE LOCATION.

7. THE DESIGN OF THE SUPPORTING STRUCTURAL ELEMENTS SHALL BE THE RESPONSIBILITY OF THE PROFESSIONAL OF RECORD FOR THE BUILDING OR STRUCTURE AND IN ACCORDANCE WITH CURRENT BUILDING CODES FOR THE LOADS LISTED ON THIS DRAWING.

8. DOOR JAMB TO BE MINIMUM 2x6 STRUCTURAL GRADE LUMBER.

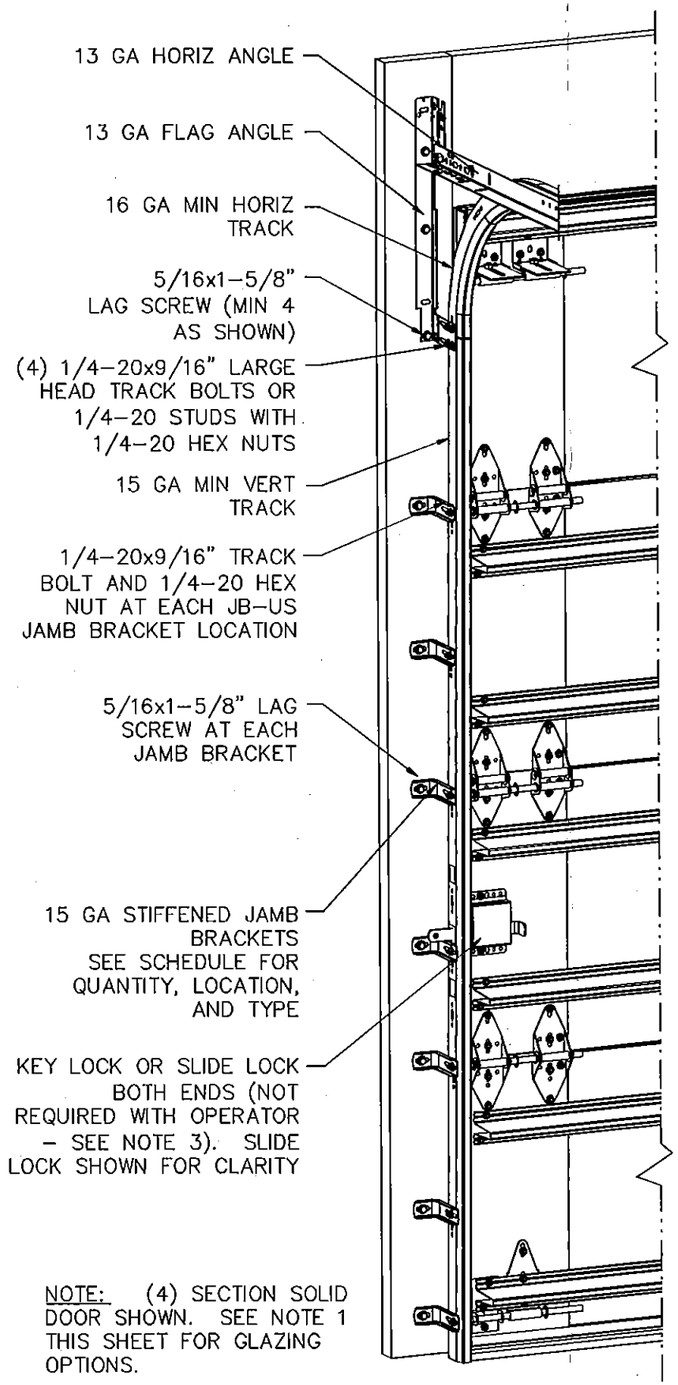

NOTE: (4) SECTION SOLID DOOR SHOWN. SEE NOTE 1 THIS SHEET FOR GLAZING OPTIONS.

SUPERIMPOSED DESIGN PRESSURE LOADS ON SUPPORTING STRUCTURE

DOOR WIDTH	DOOR HEIGHT	UNIFORM LOAD EACH JAMB (PLF)
8'–2"	ALL	+261.3/–294.0
9'–2"	ALL	+293.3/–330.0

JAMB BRACKET SCHEDULE

DOOR HEIGHT	NO. OF SECTIONS	NO. OF JAMB BRACKETS (EACH JAMB)	LOCATION OF CENTERLINE OF JAMB BRACKETS MEASURED FROM BOTTOM OF TRACK (ALL DIMENSIONS ± 2")
6'–6"	4	7	2" (JB–US), 10" (JB–US), 21–3/4" (JB–US), 29–3/4" (JB–US), 39" (JB–US), 48" (JB–US), 57–1/4" (JB–US)
7'–0"	4	7	2" (JB–US), 10" (JB–US), 21–3/4" (JB–US), 29–3/4" (JB–US), 42" (JB–US), 52–1/2" (JB–US), 63–1/4" (JB–US)
7'–6"	4 OR 5	8	2" (JB–US), 10" (JB–US), 18–3/4" (JB–US), 26–3/4" (JB–US), 36" (JB–US), 45" (JB–US), 54–1/4" (JB–US), 74–1/2" (JB–US)
8'–0"	4 OR 5	8	2" (JB–US), 10" (JB–US), 21–3/4" (JB–US), 29–3/4" (JB–US), 39" (JB–US), 48" (JB–US), 57–1/2" (JB–US), 75–1/2" (JB–US)

NOTE:
(JB–US) FOLLOWING DIMENSION DENOTES SLOTTED JAMB BRACKET ATTACHED TO TRACK WITH 1/4–20x9/16" TRACK BOLT AND NUT AS SHOWN ABOVE.

ALL DOORS GREATER THAN 8' IN HEIGHT REQUIRE USE OF CONTINUOUS WALL ANGLE. SEE SHEET 3 FOR DETAILS.

DOORS MAY USE 3" TRACK IN LEIU OF 2" TRACK.E.

REVISIONS

MARK A. SAWICKI LICENSE No 72613 12/17/15 STATE OF FLORIDA PROFESSIONAL ENGINEER

MARK A. SAWICKI, PE
2501 S. STATE HWY 121, SUITE 200
LEWISVILLE, TX 75067
FL PE 72813
TX PE 106291

PRODUCT REVISED
as complying with the Florida Building Code
Acceptance No 15-1228.09
Expiration Date 12/04/2019
By
Miami Dade Product Control

The Genuine. The Original. OVERHEAD DOOR

2501 S. STATE HWY 121
SUITE 200
LEWISVILLE, TEXAS 75067

STATIC PRESSURE RATINGS		APPROVED SIZES	
DESIGN (PSF):	+64.00/–72.00	MAX WIDTH:	9'–2"
TEST (PSF):	+96.00/–108.00	MAX HEIGHT:	24'–0"
IMPACT/CYCLIC RATED (YES/NO): YES		MAX SECTION HEIGHT:	24"

SERIES 5745/5765/7565/515/525

SCALE: N.T.S.		SIZE: A
	DATE	NAME
DRAWN	6/20/14	GRT
CHECKED	DATE	INITIALS

SHEET 1 OF 4

DRAWING PART NO.	REV.
411343	A

REVISIONS

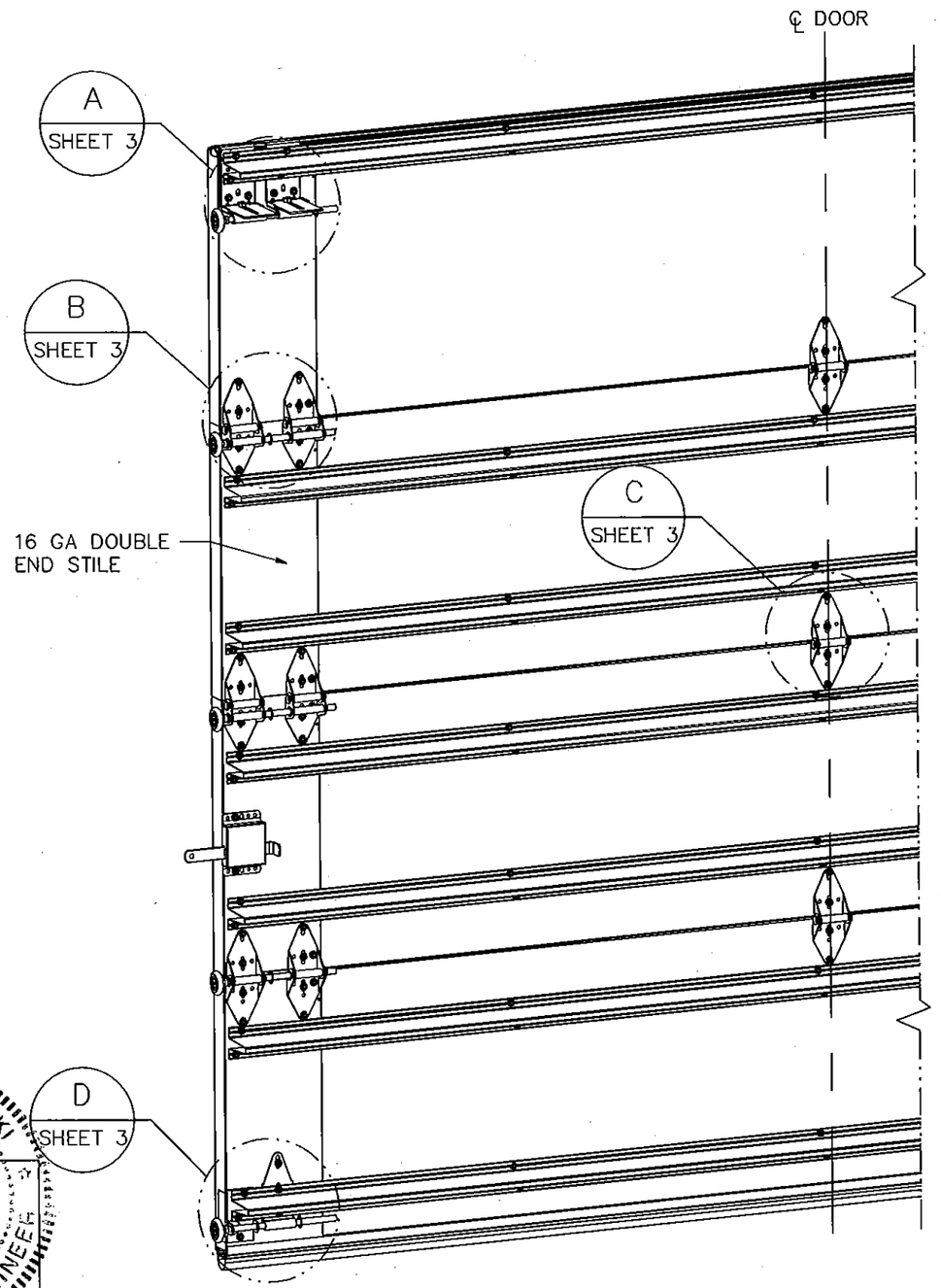

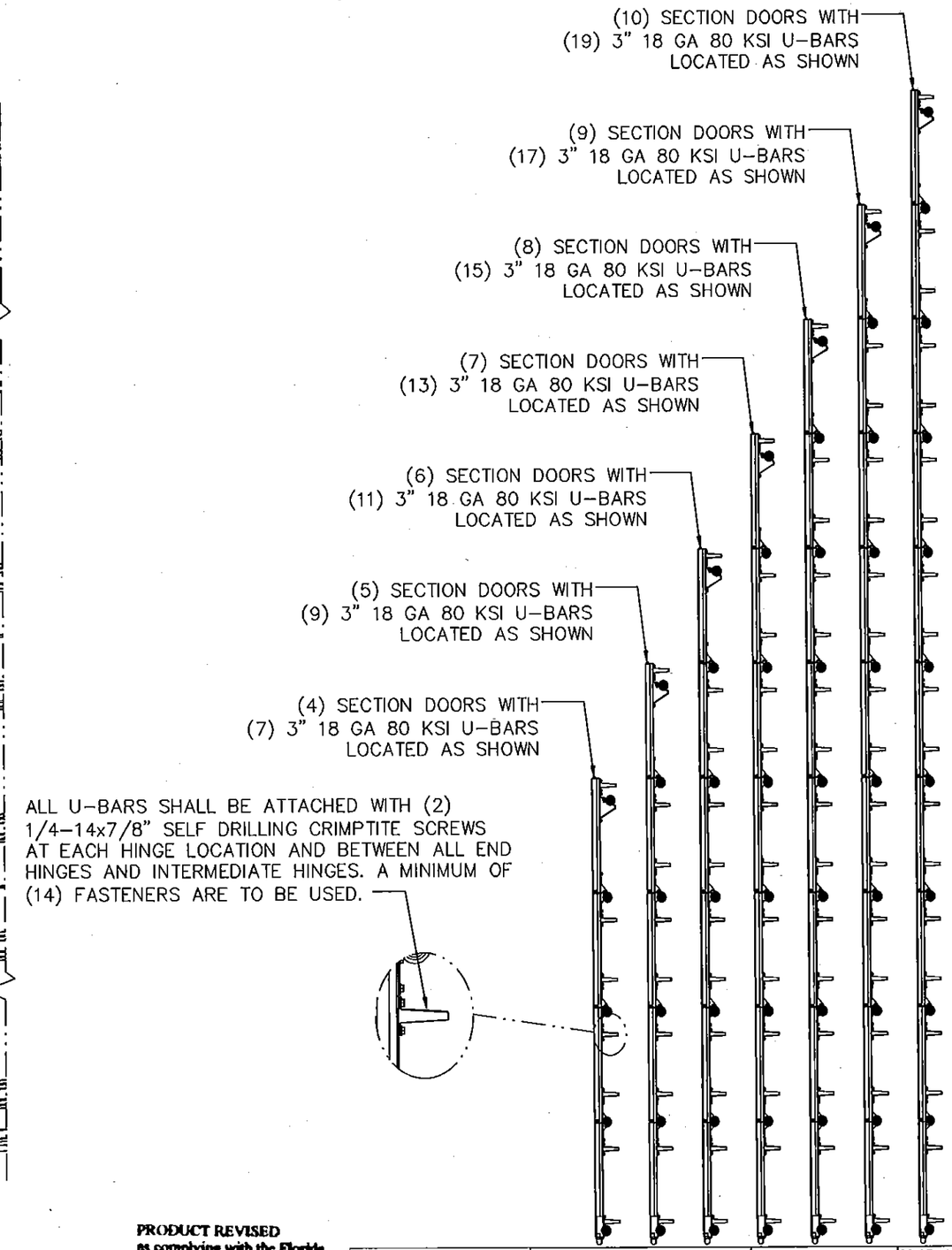

ALL U-BARS SHALL BE ATTACHED WITH (2) 1/4-14x7/8" SELF DRILLING CRIMPTITE SCREWS AT EACH HINGE LOCATION AND BETWEEN ALL END HINGES AND INTERMEDIATE HINGES. A MINIMUM OF (14) FASTENERS ARE TO BE USED.

MARK A. SAWICKI
LICENSE
No 72613
12/17/15
STATE OF
FLORIDA
PROFESSIONAL ENGINEER

MARK A. SAWICKI, PE
2501 S. STATE HWY 121, SUITE 200
LEWISVILLE, TX 75067
FL PE 72813
TX PE 106291

PRODUCT REVISED
as complying with the Florida Building Code
Acceptance No 15-1228.09
Expiration Date 12/04/2019
By _____
Miami Dade Product Control

The Genuine. The Original.
OVERHEAD DOOR
2501 S. STATE HWY 121
SUITE 200
LEWISVILLE, TEXAS 75067

STATIC PRESSURE RATINGS		APPROVED SIZES	
DESIGN (PSF):	+64.00/-72.00	MAX WIDTH:	9'-2"
TEST (PSF):	+96.00/-108.00	MAX HEIGHT:	24'-0"
IMPACT/CYCLIC RATED (YES/NO):	YES	MAX SECTION HEIGHT:	24"

SERIES 5745/5765/7565/515/525

SCALE: N.T.S.		SIZE: A
	DATE	NAME
DRAWN	6/20/14	GRT
CHECKED	DATE	INITIALS

SHEET 2 OF 4

DRAWING PART NO.	REV.
411343	A

(2) 12 GA COMMERCIAL 'L' FRAME TOP BRACKETS ATTACHED WITH (4) 1/4-20x7/8" SELF DRILLING SCREWS (2 THROUGH U-BAR AND TOP BRACKET)

13 GA ROLLER SLIDE ATTACHED TO BRACKET WITH 5/16-18 BOLT & NUT IN THE CENTER SLOT

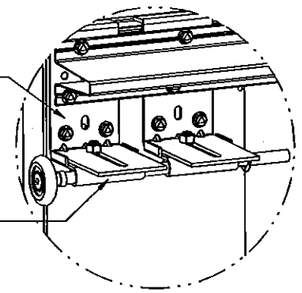

DETAIL A

ADD (2) 1/4-14x7/8" SELF DRILLING CRIMPTITE SCREWS (INSIDE OF EACH INSIDE END HINGE)

2" STEEL ROLLER WITH 9" GRADE 1144 OR EQUIVALENT STEM AND 7/16" PUSH NUT AT EACH ROLLER LOCATION LOCATED BETWEEN THE BRACKET OR HINGE (EXCEPT PUCHNUT LOCATED ON THE TOP AND BOTTOM ROLLER IS LOACTED OUTSIDE OF BOTH BRACKETS). 1/4" MAX BETWEEN PUSH NUT AND OUTER HINGE.

(2) 14 GA WIDE BODY END HINGES EACH ATTACHED WITH (4) 1/4-14x7/8" SELF DRILLING CRIMPTITE SCREWS

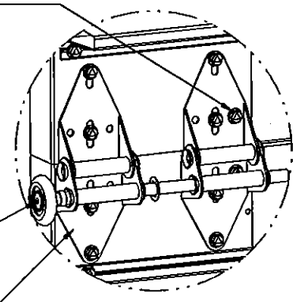

DETAIL B

NOTE: IF 3" TRACK IS USED, THEN END HINGES TO BE 11 GA MODIFIED HINGES. ROLLERS TO BE 3" STEEL ROLLERS WITH 9/16" DIA. X 9" LONG SHAFT AT ALL LOCATIONS EXCEPT TOP AND BOTTOM. TOP AND BOTTOM ROLLERS TO BE 3" STEEL ROLLERS WITH 7/16" DIA. X 9" LONG SHAFT. PUSH NUTS ONLY USED AT TOP AND BOTTOM ROLLER LOCATIONS.

14 GA WIDE BODY INTERMEDIATE HINGE ATTACHED WITH (4) 1/4-14x7/8" SELF DRILLING CRIMPTITE SCREWS

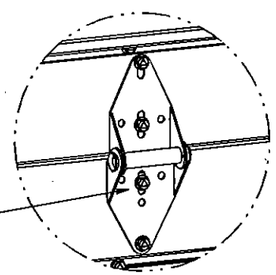

DETAIL C

12 GA EXTENSION BRACKET ATTACHED WITH (3) 1/4-14x7/8" SELF DRILLING CRIMPTITE SCREWS (2 THROUGH U-BAR AND BRACKET)

14 GA BOTTOM BRACKET ATTACHED WITH (2) 1/4-14x7/8" SELF DRILLING CRIMPTITE SCREWS THROUGH U-BAR AND BOTTOM BRACKET AND (1) 1/4-14x5/8" SELF DRILLING TAMPER RESISTANT SCREW

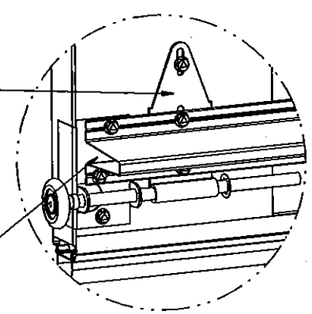

DETAIL D

HINGE & BACKER PLATE LOCATIONS

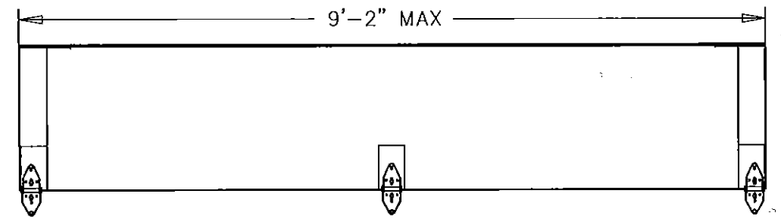

T-5 6063 ALUMINUM EXTERIOR FRAME

T-5 6063 ALUMINUM INTERIOR FRAME

SHEETMETAL SCREW

1/4" POLYCARBONATE

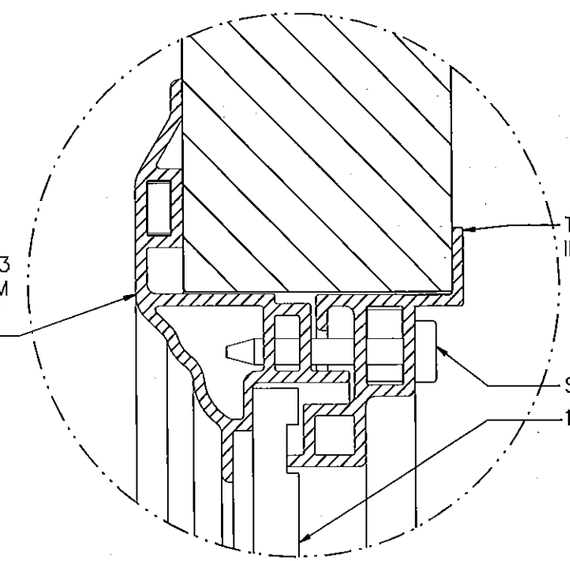

DETAIL E

MARK A. SAWICKI LICENSE No 72613 STATE OF FLORIDA PROFESSIONAL ENGINEER

12/12/15

MARK A. SAWICKI, PE
2501 S. STATE HWY 121, SUITE 200
LEWISVILLE, TX 75067
FL PE 72613
TX PE 106281

PRODUCT REVISED
as complying with the Florida Building Code
Acceptance No 15-1228.09
Expiration Date 12/04/2019
By
Miami Dade Product Control

The Genuine. The Original. OVERHEAD DOOR®
2501 S. STATE HWY 121
SUITE 200
LEWISVILLE, TEXAS 75067

STATIC PRESSURE RATINGS		APPROVED SIZES		SCALE: N.T.S.		SIZE: A
DESIGN (PSF):	+64.00/-72.00	MAX WIDTH:	9'-2"		DATE	NAME
TEST (PSF):	+96.00/-108.00	MAX HEIGHT:	24'-0"	DRAWN	6/20/14	GRT
IMPACT/CYCLIC RATED (YES/NO):	YES	MAX SECTION HEIGHT:	24"	CHECKED	DATE	INITIALS

SERIES 5745/5765/7565/515/525

SHEET 3 OF 4

DRAWING PART NO. 411343 REV. A

REVISIONS

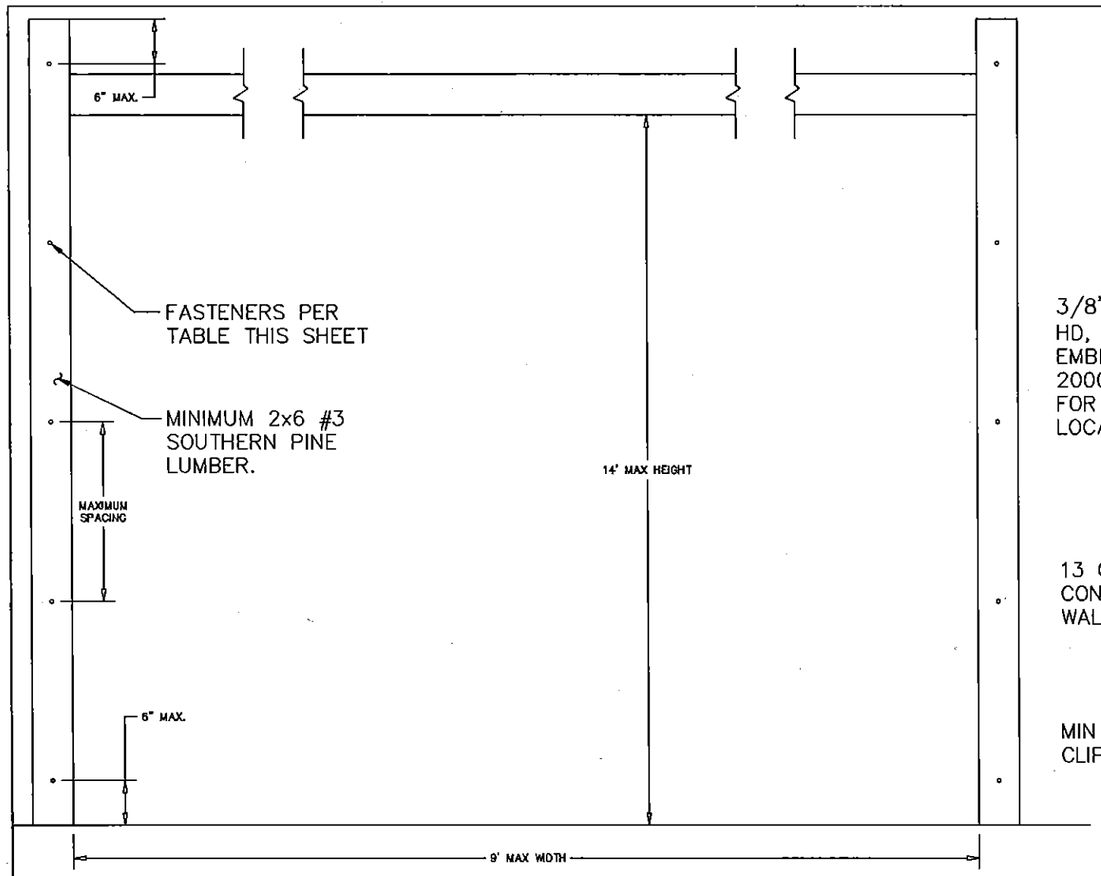

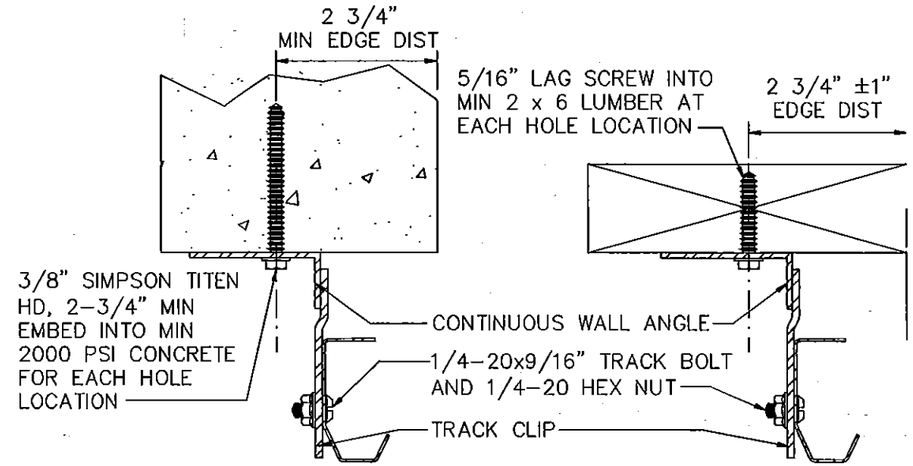

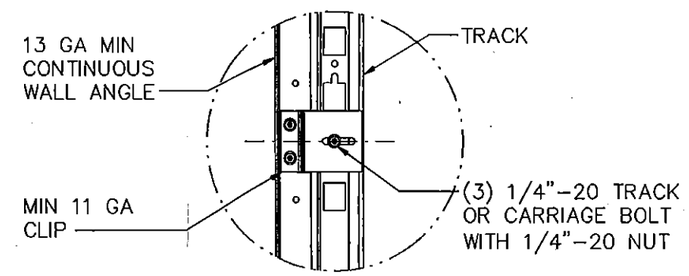

TYPICAL CLIP BOLTING DETAIL

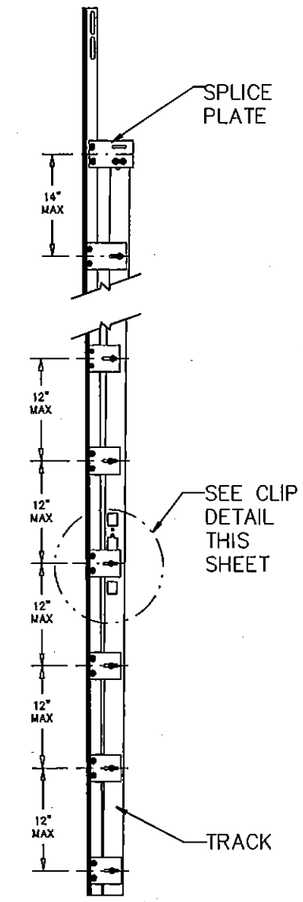

CLIPS TO BE EITHER BOLTED OR WELDED. SEE DETAILS THIS PAGE.

1. BASED ON 3/8" SIMPSON TITEN HEAVY DUTY SCREW ANCHOR WITH A 1" O.D. WASHER INTO CONCRETE WITH A MINIMUM EMBEDMENT DEPTH OF 2-3/4" AND A MINIMUM EDGE DISTANCE OF 2-3/4".
2. BASED ON 3/8" SIMPSON TITEN HEAVY DUTY SCREW ANCHOR WITH A 1" O.D. WASHER INTO GROUT FILLED CMU WITH A MINIMUM EMBEDMENT DEPTH OF 2-3/4", A MINIMUM EDGE DISTANCE OF 4", AND A MINIMUM END DISTANCE OF 4". CONCRETE MASONRY UNITS SHALL CONFORM TO ASTM C90 AND GROUT SHALL CONFORM TO ASTM C476.
3. BASED ON 3/8" DIAMETER x 3" LONG LAG SCREWS WITH 1" O.D. WASHERS WITH A 1-9/32" THREAD PENETRATION INTO SEASONED DRY WOOD SUPPORTING STRUCTURE.
4. PROVIDE QUANTITY OF SCREW ANCHORS OR LAG SCREWS AS REQUIRED TO MAINTAIN MAXIMUM SPACING AS SHOWN IN TABLE WITH A MINIMUM OF THREE (3) SCREW ANCHORS OR LAG SCREWS PER JAMB. SCREW ANCHORS OR LAG SCREWS AT TOP AND BOTTOM OF JAMB SHALL BE PLACED A MAXIMUM OF 6" FROM THE END OF THE JAMB.
5. LOAD PER JAMB CALCULATED TO BE A MAXIMUM OF +293.3/-330.0 LBS PER FOOT.
6. CHART INCLUDES A SAFETY FACTOR OF 4.
7. DOOR JAMB TO BE MINIMUM 2x6 NO. 3 SOUTHERN PINE LUMBER (MIN) MOUNTED DIRECTLY TO SUPPORT STRUCTURE.
8. DESIGN OF THE SUPPORT STRUCTURE SHALL BE THE SOLE RESPONSIBILITY OF THE BUILDING DESIGNER AND SHALL BE DESIGNED FOR THE LOADS LISTED IN NOTE 5.
9. SCREW ANCHORS OR LAG SCREWS SHALL BE INSTALLED PER MANUFACTURER'S WRITTEN INSTRUCTIONS.

MAX SPACING OF ANCHORS/SCREWS PER JAMB (IN)		
3/8" SIMPSON TITEN HD SCREW ANCHOR TO MINIMUM 2000 PSI CONCRETE NOTE 1	3/8" SIMPSON TITEN HD SCREW ANCHOR TO MINIMUM 2000 PSI GROUT FILLED CMU NOTE 2	3/8" X 3" LONG LAG SCREW NOTE 3
24	24	23

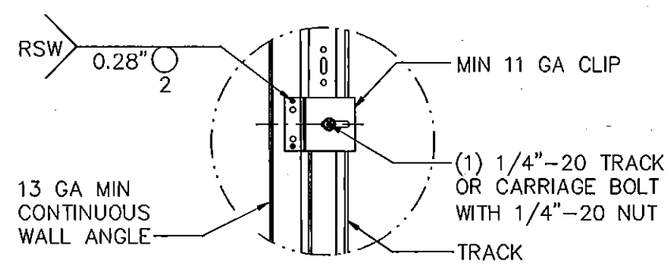

TYPICAL CLIP WELDING DETAIL

MARK A. SAWICKI LICENSE No 72613 12/17/15 STATE OF FLORIDA PROFESSIONAL ENGINEER

PRODUCT REVISED as complying with the Florida Building Code
Acceptance No 15-1228.09
Expiration Date 12/04/2019
By Miami-Dade Product Control

CONTINOUS WALL ANGLE DETAILS

REVISIONS

MARK A. SAWICKI, PE
2501 S. STATE HWY 121, SUITE 200
LEWISVILLE, TX 75067
FL PE 72613
TX PE 106291

The Genuine. The Original. OVERHEAD DOOR®
2501 S. STATE HWY 121
SUITE 200
LEWISVILLE, TEXAS 75067

STATIC PRESSURE RATINGS		APPROVED SIZES	
DESIGN (PSF):	+64.00/-72.00	MAX WIDTH:	9'-2"
TEST (PSF):	+96.00/-108.00	MAX HEIGHT:	24'-0"
IMPACT/CYCLIC RATED (YES/NO):	YES	MAX SECTION HEIGHT:	24"

SERIES 5745/5765/7565/515/525

SCALE: N.T.S.		SIZE: A
	DATE	NAME
DRAWN	6/20/14	GRT
CHECKED	DATE	INITIALS

SHEET 4 OF 4

DRAWING PART NO.	REV.
411343	A