MIAMI-DADE COUNTY
PRODUCT CONTROL SECTION
11805 SW 26 Street, Room 208
Miami, Florida 33175-2474
T (786) 315-2590 F (786) 315-2599
www.miamidade.gov/economy

DEPARTMENT OF REGULATORY AND ECONOMIC RESOURCES (RER)
BOARD AND CODE ADMINISTRATION DIVISION

# NOTICE OF ACCEPTANCE (NOA)

**RC Home Showcase, Inc.**
**16115 N. W. 52nd Avenue,**
**Miami, FL 33014**

**SCOPE:**

This NOA is being issued under the applicable rules and regulations governing the use of construction materials. The documentation submitted has been reviewed and accepted by Miami-Dade County RER -Product Control Section to be used in Miami Dade County and other areas where allowed by the Authority Having Jurisdiction (AHJ).

This NOA shall not be valid after the expiration date stated below. The Miami-Dade County Product Control Section (In Miami Dade County) and/or the AHJ (in areas other than Miami Dade County) reserve the right to have this product or material tested for quality assurance purposes. If this product or material fails to perform in the accepted manner, the manufacturer will incur the expense of such testing and the AHJ may immediately revoke, modify, or suspend the use of such product or material within their jurisdiction. RER reserves the right to revoke this acceptance, if it is determined by Miami-Dade County Product Control Section that this product or material fails to meet the requirements of the applicable building code.

This product is approved as described herein, and has been designed to comply with the Florida Building Code, including the High Velocity Hurricane Zone.

**DESCRIPTION: Series CS240 Aluminum Sliding Glass Door–SMI**

**APPROVAL DOCUMENT:** Drawing No. **14-405 Rev 2,** titled "Series CS240 SLD Glass Door (SMI), sheets 1 through 11 of 11, prepared by Eastern Engineering Group, dated 01/11/16, signed and sealed by Gonzalo A. Paz, P.E., bearing the Miami-Dade County Product Control Revision stamp with the Notice of Acceptance number and expiration date by the Miami-Dade County Product Control Section.

**MISSILE IMPACT RATING: Small Missile Impact Resistant**
**Limitations:**

1. See Design Pressure (DP) table in sheet **2** and Head/sill anchor capacity tables in sheet **3**. Lower DP from the tables shall control. Free jamb conditions must be supported by 1" Thick shim at three locations (see sheet **2**)
2. Max. Door frame area not to exceed 160 $ft^2$. See sheet **8** for approved door configurations.

**LABELING:** Each unit shall bear a permanent label with the manufacturer's name or logo, city, state and series and following statement: "Miami-Dade County Product Control Approved", noted herein.

**RENEWAL** of this NOA shall be considered after a renewal application has been filed and there has been no change in the applicable building code negatively affecting the performance of this product.

**TERMINATION** of this NOA will occur after the expiration date or if there has been a revision or change in the materials, use, and/or manufacture of the product or process. Misuse of this NOA as an endorsement of any product, for sales, advertising or any other purposes shall automatically terminate this NOA. Failure to comply with any section of this NOA shall be cause for termination and removal of NOA.

**ADVERTISEMENT:** The NOA number preceded by the words Miami-Dade County, Florida, and followed by the expiration date may be displayed in advertising literature. If any portion of the NOA is displayed, then it shall be done in its entirety.

**INSPECTION:** A copy of this entire NOA shall be provided to the user by the manufacturer or its distributors and shall be available for inspection at the job site at the request of the Building Official.

This NOA **revises & replaces # 15-0409.10** consists of this page 1 and evidence pages E-1, as well as approval document mentioned above.

The submitted documentation was reviewed by **Ishaq I. Chanda, P.E.**

MIAMI-DADE COUNTY APPROVED

1/13/16

## NOTICE OF ACCEPTANCE: EVIDENCE SUBMITTED

**A. DRAWINGS**

1. Manufacturer's die drawings and sections (submitted as below)
2. Drawing No. **14-405 Rev 2,** titled "Series CS240 SLD Glass Door (SMI), sheets 1 through 11 of 11, prepared by Eastern Engineering Group, dated 01/11/16, signed and sealed by Gonzalo A. Paz, P.E.

Note: This revision consist of correction of SG interlayer thickness.

**B. TESTS** (submitted under file **# 15-0409.10)**

1. Test reports on 1) Air Infiltration Test, per FBC, TAS 202-94
   2) Uniform Static Air Pressure Test, Loading per FBC, TAS 202-94
   3) Water Resistance Test, per FBC, TAS 202-94
   4) Small Missile Impact Test per FBC, TAS 201-94
   5) Cyclic Wind Pressure Loading per FBC, TAS 203-94
   6) Forced Entry Test, per FBC 2411 3.2.1 and TAS 202-94

Along with marked-up drawings and installation diagram of Aluminum Sliding Glass Doors, prepared by Hurricane Engineering & Testing, Inc., Test Report No(s). **HETI-15-5008**, dated 03/17/15, **HETI-15-5009**, dated 03/17/15 **HETI-15-5011**, dated 03/17/15 and **HETI-15-5012**, signed and sealed by Rafael E. Droz-Seda, P.E.

**C. CALCULATIONS** (submitted under file **# 15-0409.10)**

1. Anchor verification calculation, complying w/ FBC 2014(5th Edition), dated 05/13/2015, 08/24/15 and last revised on 10/21/15, prepared by Eastern Engineering Group, signed and sealed by Gonzalo A. Paz, P.E.
2. Glazing complies with ASTME-1300-02,-04 & -09.

**D. QUALITY ASSURANCE**

1. Miami Dade Department of Regulatory and Economic Resources (RER).

**E. MATERIAL CERTIFICATIONS**

1. Notice of Acceptance No. **14-0916.11** issued to **Kuraray America, Inc.** (Former E.I. DuPont DeNemours & Co., Inc. for the "**Sentry Glass ® (Clear and White) Glass Interlayers**", expiring on 07/04/18.
2. Notice of Acceptance No. **14-0916.10** issued to **Kuraray America, Inc.** (Former E.I. DuPont DeNemours & Co., Inc. for the "**Kurray Butacite PVB Interlayers**", expiring on 12/11/2016.
3. Technical data sheet of thermoplastic Sarlin TPV 5765B by Teknor Apex Company.

**F. STATEMENTS** (Item #2 submitted under file **# 15-0409.10)**

1. Statement letter prepared by Eastern Engineering Group, dated Jan 08, 2016 for correction of Sentry glas interlayer thickness per test report # HETI-15-5012, signed and sealed by Gonzalo A. Paz, P.E.
2. Statement letter of compliance to FBC 2014 (5th Edition) and of "No financial interest" dated AUG 20, 2015 prepared by Eastern Engineering Group, signed and sealed by Gonzalo A. Paz, P.E.
3. Statement of Lab compliance, part of above test reports.

**G. OTHER**

1. This NOA **revises & replaces # 15-0409.10,** expiring, 01/21/2020.

Ishaq I. Chanda

**Ishaq I. Chanda, P.E.**
**Product Control Examiner**
**NOA No. 16-0112.01**
**Expiration Date: November 25, 2020**
**Approval Date: January 21, 2016**

## DESIGN SEQUENCE

STEP 1:DETERMINE SITE SPECIFIC WIND LOADING REQUIREMENTS AS PER ASCE-07
STEP 2:SEE SHEET 2 FOR DESIGN LOAD CAPACITY BASED ON DESIRED PANEL SIZE.
STEP 3:SEE SHEET 3 FOR HEAD & SILL ANCHOR CONFIGURATIONS WITH DESIGN RATING GREATER THAN LOADS REQUIRED.
STEP 4: LOWER DESIGN PRESSURES FROM STEPS 2 & 3 WILL APPLY TO ENTIRE SYSTEM.

| |
|---|
| PANEL WIDTH= NOM. PANEL |
| PANEL HEIGHT= FRAME HEIGHT- 1 $\frac{1}{2}$" |
| DLO HEIGTH= FRAME HEIGHT-6" |
| DLO WIDTH= NOM. PANEL WIDTH-6" |

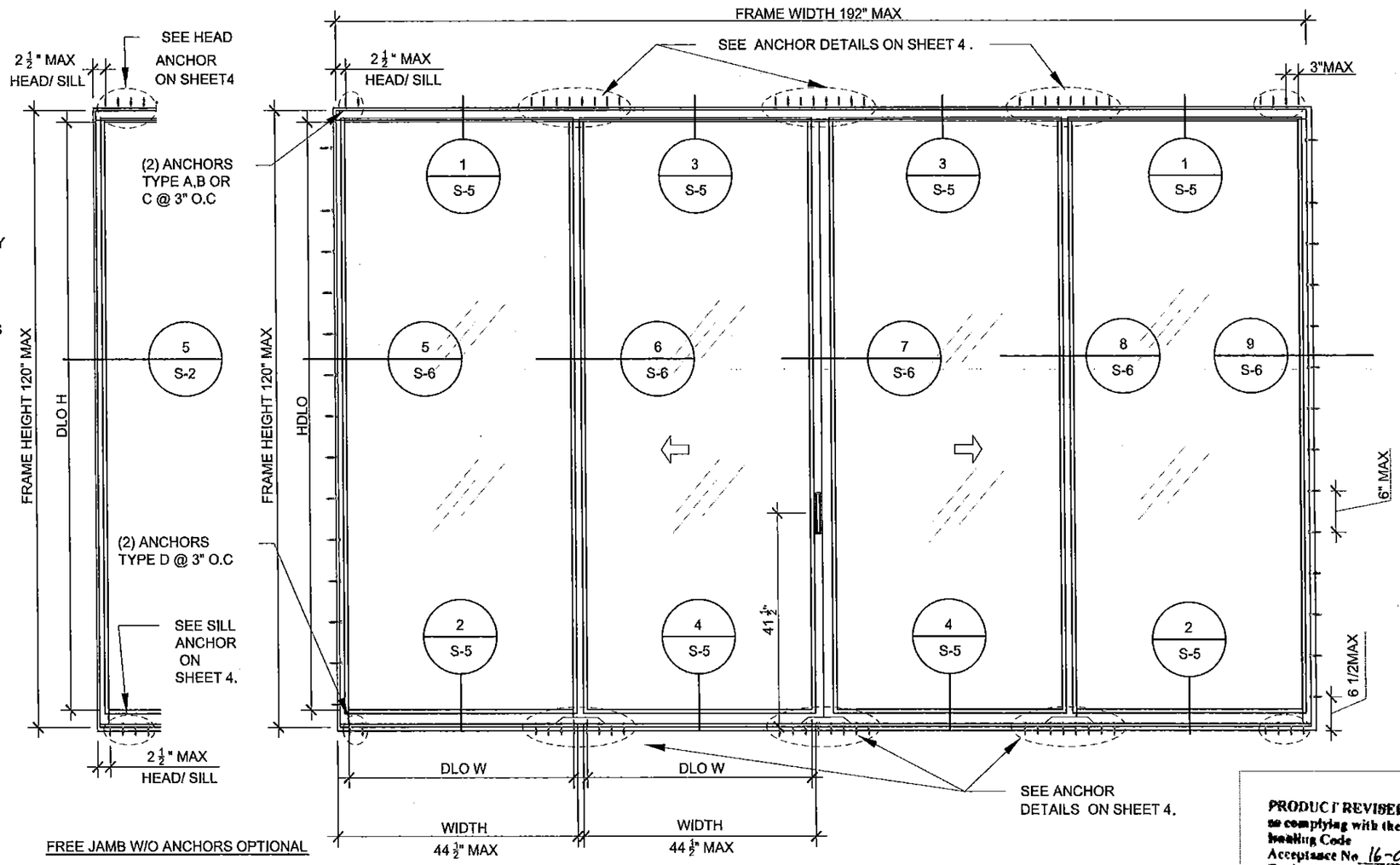


## TYPICAL ELEVATION SGD (OXXO)

SCALE: 1/2"=1'-0"

**PRODUCT REVISED**
**to complying with the Florida building Code**
**Acceptance No** 16-0112.01
**Expiration Date** Nov 25, 2020
**Miami-Dade Product Control**

## GENERAL NOTES

- THIS WINDOWS SYSTEM IS DESIGNED AND TESTED TO COMPLY W/ THE REQUIREMENTS OF THE FLORIDA BUILDING CODE INCLUDING HIGH VELOCITY HURRICANE ZONE VELOCITY (HVHZ) AND ASTM 1300-09 THESE WINDOWS ARE RATE FOR SMALL MISSILE IMPACT. (SHUTTERS ARE NOT REQUIRED FOR INSTALLATION ABOVE 30FT FROM GRADE )
- ANCHORS SHOWN IN DRAWINGS ARE AS PER TEST UNITS. ANCHORS ON ALL PANEL SIZES ARE NOT TO EXCEED THESE MAXIMUM SPACING ON CENTER (O.C.) AND AS TABULATED ON SHEET 3 & 4.
- ANCHOR CONDITIONS NOT DESCRIBED IN THESE DRAWING'S ARE TO BE ENGINEERED ON A SITE SPECIFIC BASIS, UNDER A SEPARATE APPROVAL AND TO BE REVIEWED BY BUILDING OFFICIAL FOR NON-HVHZ. FOR HVHZ ONE-TIME APPROVAL REQUIRED FOR MIAMI-DADECOUNTY(PRODUCT CONTROL SECTIONS)
- LOAD DURATION INCREASE IN ALLOWABLE STRESS IS USED IN DESIGN OF ANCHORS INTO WOOD ONLY.
- ANCHORS EMBEDMENT TO BASE MATERIAL SHALL BE BEYOND WALL DRESSING OR STUCCO.
- ALL METAL/STEEL IN CONTACT WITH ALUMINUM OR OTHER DISSIMILAR MATERIALS TO BE PAINTED OR PLATED AND SHALL MEET THE FLORIDA BLDG. CODE.
- USE RATING GREATER THAN DESIGN LOADS REQUIRED
- FRAME AREA OF ALTERNATE SIZES MUST NOT EXCEED THE TESTED AREA OF 160 SF.
- EXISTING STRUCTURE TO SUPPORT THE LOADS IMPOSED BY THE SLIDING DOOR SYSTEM. ENGINEER ON RECORD OF THE BUILDING SHALL VERIFY THE STRUCTURE FOR SUCH LOADINGS
- DOOR MUST COMPLY W/ EGRESS REQUIREMENTS AS APPLICABLE PER FBC.


EASTERN ENGINEERING GROUP
3401 NW 82 AVE SUITE 370 Miami, Florida 33122
Tel. (305) 599-8133 Fax. (305) 599-6076
www.easterneg.com
☐ RAISSA R. LOPEZ, PE (Lic No-59399)
☐ GONZALO A. PAZ, PE (Lic No-60734)
CERT. OF AUTHORIZATION No. 26655


REVISIONS

| No. | DATE | DESCRIPTION |
|---|---|---|
| REV2 | 10/21/2015 | CITY COMMENTES |

Drawing NO. 14 405
DESIGNED & DRAWN: EC_JM
SCALE : AS SHOWN

SERIES CS240 ALUM. SLD. GLASS DOOR (S.M.I.)


HOME SHOWCASE
16115 NW 52nd Ave.
Miami Gardens, FL 33014
Phone: (305) 392 - 6214
Fax: (305) 260 - 6432


1/11/2016

SHEET: 1 OF 11

| DESIGN LOAD CAPACITY (PSF) | | | | | |
|---|---|---|---|---|---|
| NOMINAL DIMENSIONS | | GLASS TYPE "A" 9/16" HS LAM. | | GLASS TYPE "B" 9/16" HS LAM. | |
| NOMINAL WIDTH INCHES | FRAME HEIGHT INCHES | EXT(-) | INT(+) | EXT(-) | INT(+) |
| 30 | 96 | 131.0 | 131.0 | 120.0 | 120.0 |
| 36 | | 131.0 | 131.0 | 120.0 | 120.0 |
| 42 | | 131.0 | 131.0 | 120.0 | 120.0 |
| 48 | | 131.0 | 131.0 | 120.0 | 120.0 |
| 54 | | 72.7 | 72.7 | 66.6 | 66.6 |
| 60 | | 42.9 | 42.9 | --- | --- |
| 30 | 102 | 131.0 | 131.0 | 120.0 | 120.0 |
| 36 | | 131.0 | 131.0 | 120.0 | 120.0 |
| 42 | | 131.0 | 131.0 | 120.0 | 120.0 |
| 48 | | 131.0 | 131.0 | 120.0 | 120.0 |
| 54 | | 72.7 | 72.7 | --- | --- |
| 30 | 108 | 131.0 | 131.0 | 120.0 | 120.0 |
| 36 | | 131.0 | 131.0 | 120.0 | 120.0 |
| 42 | | 131.0 | 131.0 | 120.0 | 120.0 |
| 48 | | 131.0 | 131.0 | 120.0 | 120.0 |
| 53 | | 79.8 | 79.8 | --- | --- |
| 30 | 114 | 131.0 | 131.0 | 120.0 | 120.0 |
| 36 | | 131.0 | 131.0 | 120.0 | 120.0 |
| 42 | | 131.0 | 131.0 | 120.0 | 120.0 |
| 48 | | 131.0 | 131.0 | 120.0 | 120.0 |
| 30 | 120 | 131.0 | 131.0 | --- | --- |
| 36 | | 131.0 | 131.0 | --- | --- |
| 42 | | 131.0 | 131.0 | --- | --- |
| 48 | | 131.0 | 131.0 | --- | --- |

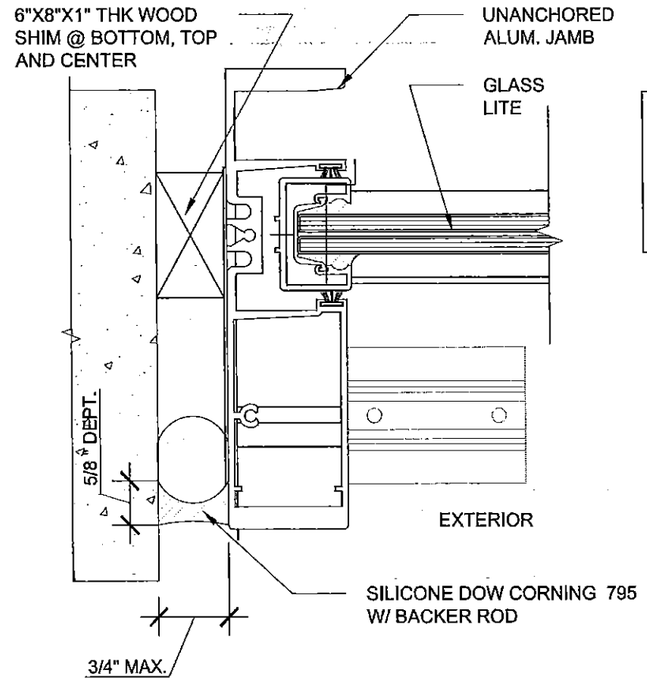


GAP DIMENSIONS

⅜" MIN FOR UP TO 8'-0" HIGH FRAME
½" MIN FOR UP TO 9'-0" HIGH FRAME
⅝" MIN FOR UP TO 10'-0" HIGH FRAME
3/4" MAX

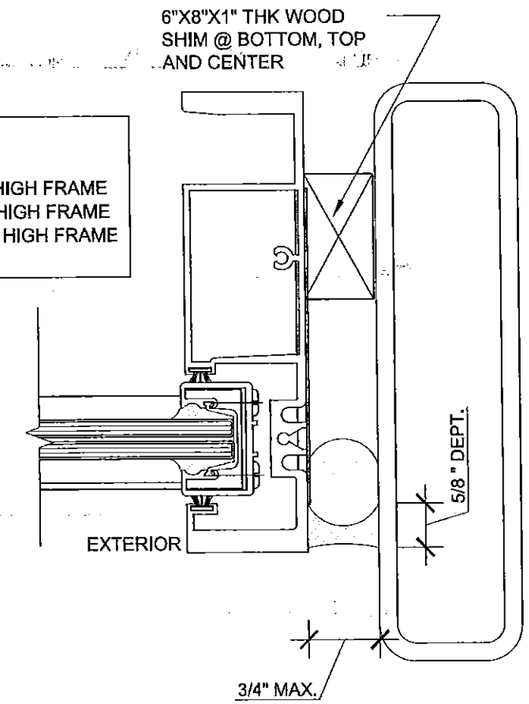


## FREE JAMB &SILICONE TYPICAL DETAIL

SCALE: 6"=1'-0"

5 / S-2

5 / S-2

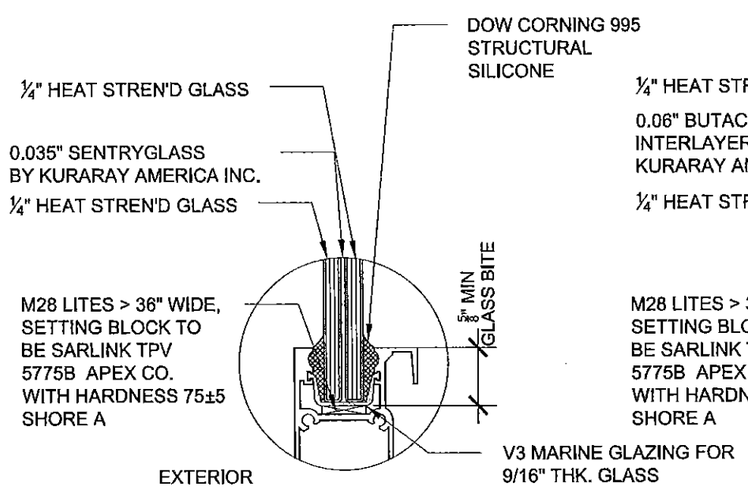


## GLASS TYPE "A" DETAIL

SCALE: 6"=1'-0"

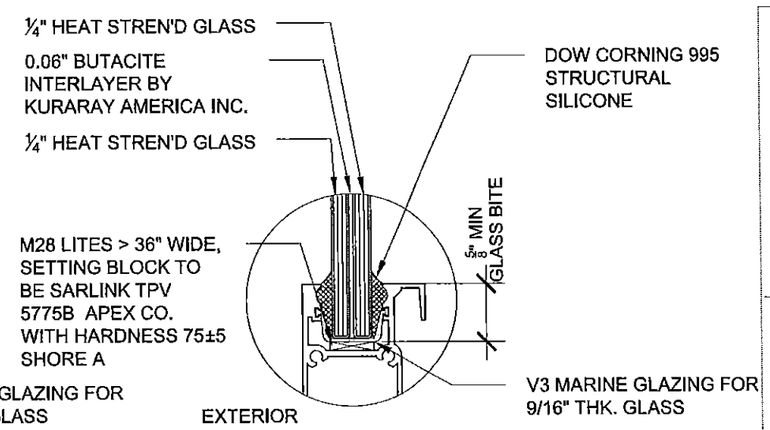


## GLASS TYPE "B" DETAIL

SCALE: 6"=1'-0"

PRODUCT REVISED
to complying with the Florida Building Code
Acceptance No 16-0112.01
Expiration Date 11/25/2020
By: [signature]
Miami-Dade Product Control


EASTERN ENGINEERING GROUP
3401 NW 82 AVE SUITE 370 Miami, Florida 33122
Tel. (305) 599-8133 Fax. (305) 599-8076
www.easterneng.com
RAISSA R. LOPEZ, PE (Lic No-59399)
GONZALO A. PAZ, PE (Lic No-60734)
CERT. OF AUTHORIZATION No. 26655


REVISIONS

| No. | DATE | DESCRIPTION |
|---|---|---|
| | | |

Drawing NO. 14 405
DESIGNED & DRAWN: EC_JM
SCALE: AS SHOWN

SERIES CS240 ALUM. SLD. GLASS DOOR (S.M.I.)


RC HOME SHOWCASE ALUMINUM WINDOWS AND DOORS
16115 NW 52nd Ave.
Miami Gardens, FL 33014
Phone: (305) 392 - 6214
Fax: (305) 280 - 6432


1/11/2016

## DESIGN LOAD CAPACITY OF HEAD ANCHORS (PSF)

| ANCHOR TYPE | | | | A (CONCRETE) | | | B (WOOD BUCK) | | | | C (METAL) | | |
|---|---|---|---|---|---|---|---|---|---|---|---|---|---|
| SHIM WIDTH (in) | | | | ≤1/4 | | | ≤ 1/4 | | | | ≤ 1/4 | | |
| ANCHORS @ FREE STANDING JAMB | | | | 2 | 3 | 4 | 2 | 3 | 4 | 5 | 2 | 3 | 4 |
| ANCHORS @ MEETING STILE/ INTERLOCK | | | | 4 | 6 | 8 | 4 | 6 | 8 | 10 | 4 | 6 | 8 |
| FRAME WIDTH (in) | 30 | FRAME HEIGHT (in) | 96 | 131 | 131 | 131 | 115 | 131 | 131 | 131 | 131 | 131 | 131 |
| | 36 | | | 122 | 131 | 131 | 96 | 131 | 131 | 131 | 131 | 131 | 131 |
| | 42 | | | 105 | 131 | 131 | 82 | 123 | 131 | 131 | 113 | 131 | 131 |
| | 48 | | | 92 | 131 | 131 | 72 | 108 | 131 | 131 | 99 | 131 | 131 |
| | 54 | | | 72.7 | 72.7 | 72.7 | 64 | 72.7 | 72.7 | 72.7 | 72.7 | 72.7 | 72.7 |
| | 60 | | | 42.9 | 42.9 | 42.9 | 42.9 | 42.9 | 42.9 | 42.9 | 42.9 | 42.9 | 42.9 |
| | 30 | | 102 | 131 | 131 | 131 | 108 | 131 | 131 | 131 | 131 | 131 | 131 |
| | 36 | | | 115 | 131 | 131 | 90 | 131 | 131 | 131 | 124 | 131 | 131 |
| | 42 | | | 99 | 131 | 131 | 77 | 116 | 131 | 131 | 106 | 131 | 131 |
| | 48 | | | 86 | 130 | 131 | 68 | 101 | 131 | 131 | 93 | 131 | 131 |
| | 54 | | | 72.7 | 72.7 | 72.7 | 60 | 72.7 | 72.7 | 72.7 | 72.7 | 72.7 | 72.7 |
| | 30 | | 108 | 130 | 131 | 131 | 102 | 131 | 131 | 131 | 131 | 131 | 131 |
| | 36 | | | 109 | 131 | 131 | 85 | 128 | 131 | 131 | 117 | 131 | 131 |
| | 42 | | | 93 | 131 | 131 | 73 | 109 | 131 | 131 | 100 | 131 | 131 |
| | 48 | | | 82 | 122 | 131 | 64 | 96 | 128 | 131 | 88 | 131 | 131 |
| | 53 | | | 74 | 79.8 | 79.8 | 58 | 79.8 | 79.8 | 79.8 | 79 | 79.8 | 79.8 |
| | 30 | | 114 | 124 | 131 | 131 | 97 | 131 | 131 | 131 | 131 | 131 | 131 |
| | 36 | | | 103 | 131 | 131 | 81 | 121 | 131 | 131 | 111 | 131 | 131 |
| | 42 | | | 88 | 131 | 131 | 69 | 104 | 131 | 131 | 95 | 131 | 131 |
| | 48 | | | 77 | 116 | 131 | 60 | 91 | 121 | 131 | 83 | 125 | 131 |
| | 30 | | 120 | 117 | 131 | 131 | 92 | 131 | 131 | 131 | 126 | 131 | 131 |
| | 36 | | | 98 | 131 | 131 | 77 | 115 | 131 | 131 | 105 | 131 | 131 |
| | 42 | | | 84 | 126 | 131 | 66 | 98 | 131 | 131 | 90 | 131 | 131 |
| | 48 | | | 73 | 110 | 131 | 57 | 86 | 115 | 131 | 79 | 119 | 131 |

NOTE:

- 1BY OR 2BY WOOD BUCKS AND METAL STRUCTURES NOT BY RC HOME SHOWCASE MUST SUPPORT LOADS IMPOSED BY GLAZING SYSTEM TRANSFER THEM TO THE BUILDING STRUCTURE.
- ALL JOINTS AND FRAME CONNECTIONS SEALED WITH DOW CORNING 795 SEALANT
- METAL STRUCTURE OR M-D COUNTY APPROVED MULLION MIN THICKNESS ARE FOLLOWS

@ HEAD: 1/8" MIN STEEL OR ALUMINUM (6063-T6) UP TO 1/4" MAX SHIM.

@ JAMB: 1/4" MIN ALUMINUM (6063-T6) OR 3/16" MIN STEEL FOR SHIM UP TO 9/16"
1/8" MIN STEEL OR ALUMINUM (6063-T6) UP TO 1/4" MAX SHIM.

## DESIGN LOAD CAPACITY OF SILL ANCHORS (PSF)

| ANCHOR TYPE | | | | D (CONCRETE) | | | |
|---|---|---|---|---|---|---|---|
| SHIM WIDTH (in) | | | | ≤ 1/4 | | | |
| ANCHORS @ FREE STANDING JAMB | | | | 2 | 2 | 3 | 4 |
| ANCHORS @ MEETING STILE/ INTERLOCK | | | | 2 | 4 | 6 | 8 |
| FRAME WIDTH (in) | 30 | FRAME HEIGHT (in) | 96 | 73 | 131 | 131 | 131 |
| | 36 | | | 61 | 122 | 131 | 131 |
| | 42 | | | 52 | 105 | 131 | 131 |
| | 48 | | | 46 | 92 | 131 | 131 |
| | 54 | | | 41 | 72.7 | 72.7 | 72.7 |
| | 60 | | | 37 | 42.9 | 42.9 | 42.9 |
| | 30 | | 102 | 69 | 131 | 131 | 131 |
| | 36 | | | 58 | 115 | 131 | 131 |
| | 42 | | | 49 | 99 | 131 | 131 |
| | 48 | | | 43 | 86 | 130 | 131 |
| | 54 | | | 38 | 72.7 | 72.7 | 72.7 |
| | 30 | | 108 | 65 | 130 | 131 | 131 |
| | 36 | | | 54 | 109 | 131 | 131 |
| | 42 | | | 47 | 93 | 131 | 131 |
| | 48 | | | 41 | 82 | 122 | 131 |
| | 53 | | | 37 | 74 | 79.8 | 79.8 |
| | 30 | | 114 | 62 | 124 | 131 | 131 |
| | 36 | | | 52 | 103 | 131 | 131 |
| | 42 | | | 44 | 88 | 131 | 131 |
| | 48 | | | 39 | 77 | 116 | 131 |
| | 30 | | 120 | 59 | 117 | 131 | 131 |
| | 36 | | | 49 | 98 | 131 | 131 |
| | 42 | | | 42 | 84 | 126 | 131 |
| | 48 | | | 37 | 73 | 110 | 131 |

PRODUCT REVIEWED
in complying with the Florida
Building Code
Acceptance No. 16-0112.01
Expiration Date 11/25/2020
Miami-Dade Product Control


EASTERN ENGINEERING GROUP
3401 NW 82 AVE SUITE 370 Miami, Florida 33122
Tel. (305) 599-8133 Fax. (305) 599-8076
www.easternegr.com
☐ RAISSA R. LOPEZ, PE (Lic No-59399)
☐ GONZALO A. PAZ, PE (Lic No-60734)
CERT. OF AUTHORIZATION No. 26555


REVISIONS

| No. | DATE | DESCRIPTION |
|---|---|---|
| REV2 | 10/21/2015 | CITY COMMENTS |

Drawing NO. 14 405
DESIGNED & DRAWN: EC_JM
SCALE : AS SHOWN

Product: SERIES CS240 ALUM. SLD. GLASS DOOR (S.M.I.)


RC HOME SHOWCASE
16115 NW 52nd Ave.
Miami Gardens, FL 33014
Phone: (305) 392 - 6214
Fax: (305) 260 - 6432


1/11/2016

SHEET: 3 OF 11

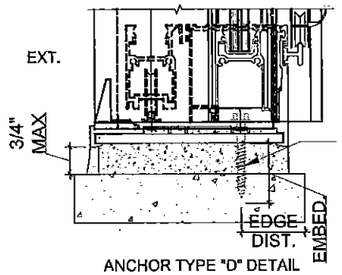


ANCHOR TYPE "D" DETAIL
INTO CONCRETE

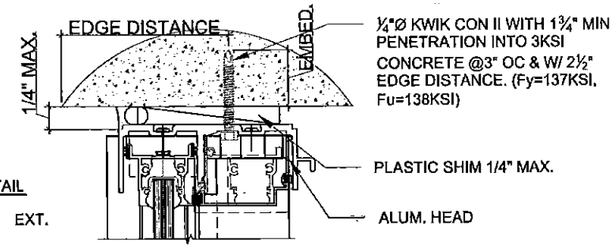


HEAD
ANCHOR TYPE "A" DETAIL

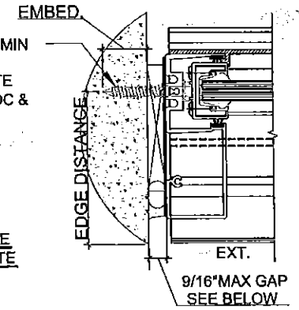


FIXED JAMB ANCHORAGE
CONN. TO CMU/CONCRETE

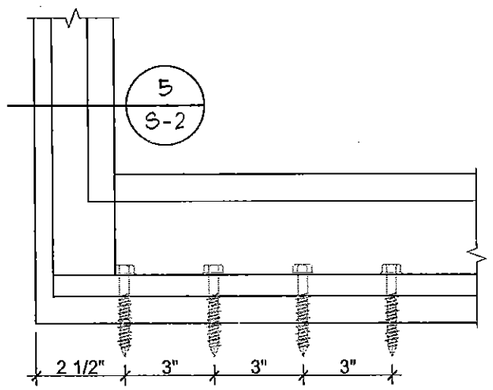


ANCHOR SPACING AT HEAD & SILL FIXED JAMB
(4-ANCHOR SCHEDULE SHOWN, SEE SHEET 3)

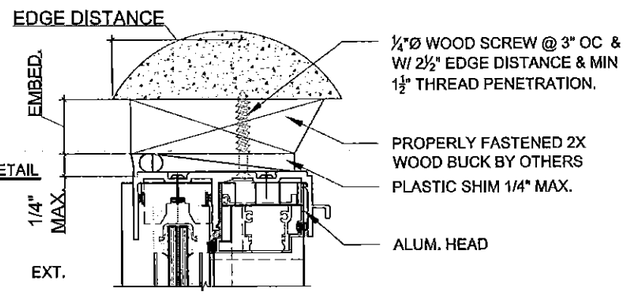


HEAD
ANCHOR TYPE "B" DETAIL

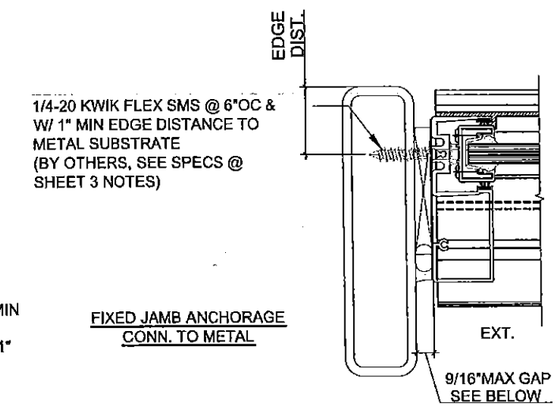


FIXED JAMB ANCHORAGE
CONN. TO METAL

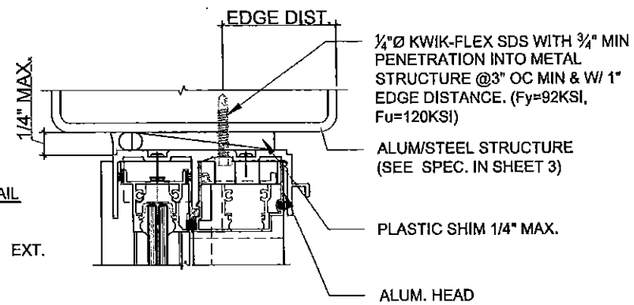


HEAD
ANCHOR TYPE "C" DETAIL

TYPICAL ANCHORS DETAILS
SCALE: 3"=1'-0"

GAP NOTES
3/8" MIN. UP TO 8'
1/2" MIN UP TO 9'
9/16" UP TO 10'

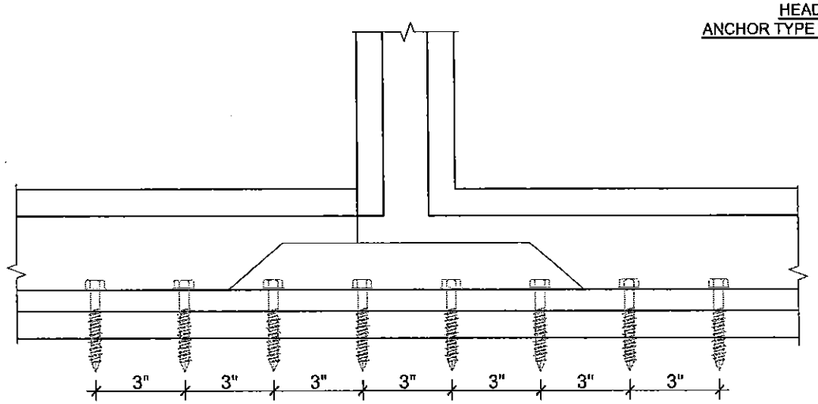


ANCHOR SPACING AT HEAD & SILL INTERLOCK/ STRAGAL
(8-ANCHOR SCHEDULE SHOWN, SEE SHEET 3)

| ANCHOR TYPES | |
|---|---|
| ANCHOR TYPE | ANCHOR DESCRIPTION |
| A | 1/4"Ø KWIK CON II WITH 1 3/4" MIN PENETRATION INTO 3KSI CONCRETE OR BETTER. SPACED AT 3" OC AND WITH 2.5" EDGE DISTANCE. (FY=137KSI, FU=138KSI) |
| B | 1/4"Ø WOOD SCREW @ 3" OC & W/ 21/2" EDGE DISTANCE & MIN 11/2" THREAD PENETRATION. (FY=137KSI, FU=138KSI) |
| C | 1/4" Ø KWIK-FLEX GRADE 5 S.D.S. WITH 3/4" MIN PENETRATION INTO METAL STRUCTURE (1/8" MIN THICKNESS). SPACED AT 3" OC MINIMUM AND WITH 1" EDGE DISTANCE. (FY=92KSI, FU=120KSI) |
| D | 1/4"Ø KWIK CON II WITH 1 3/4" MIN PENETRATION INTO 3KSI CONCRETE OR BETTER. SPACED AT MINIMUM 3" OC AND WITH 2.5" EDGE DISTANCE. (FY=137KSI, FU=138KSI) |

**PRODUCT REVISED**
**to complying with the Florida Building Code**
**Acceptance No** 16-0112.01
**Expiration Date** 11/25/2020
**By** [illegible]
**Miami-Dade Product Control**


EASTERN ENGINEERING GROUP
3401 NW 82 AVE SUITE 370 Miami, Florida 33122
Tel. (305) 599-8133 Fax. (305) 599-8076
www.easternegg.com
☐ RAISSA R. LOPEZ, PE (Lic No-59399)
☐ GONZALO A. PAZ, PE (Lic No-60734)
CERT. OF AUTHORIZATION No. 26555


REVISIONS

| No. | DATE | DESCRIPTION |
|---|---|---|
| | | |

Drawing NO. 14 405
DESIGNED & DRAWN: EC_JM
SCALE : AS SHOWN

SERIES CS240 ALUM. SLD. GLASS DOOR (S.M.I.)


RC HOME SHOWCASE ALUMINUM WINDOWS AND DOORS
16115 NW 52nd Ave.
Miami Gardens, FL 33014
Phone: (305) 392 - 6214
Fax: (305) 260 - 6432


Produce

1/11/2016

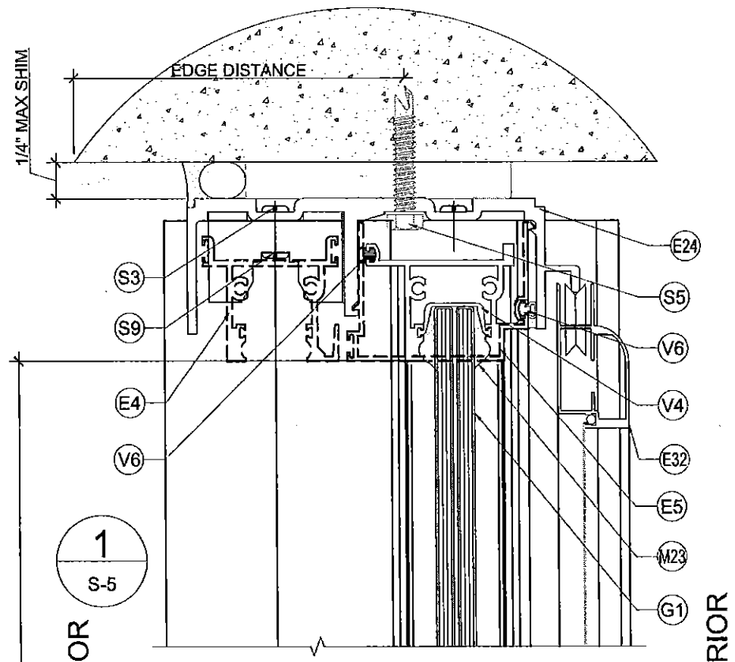


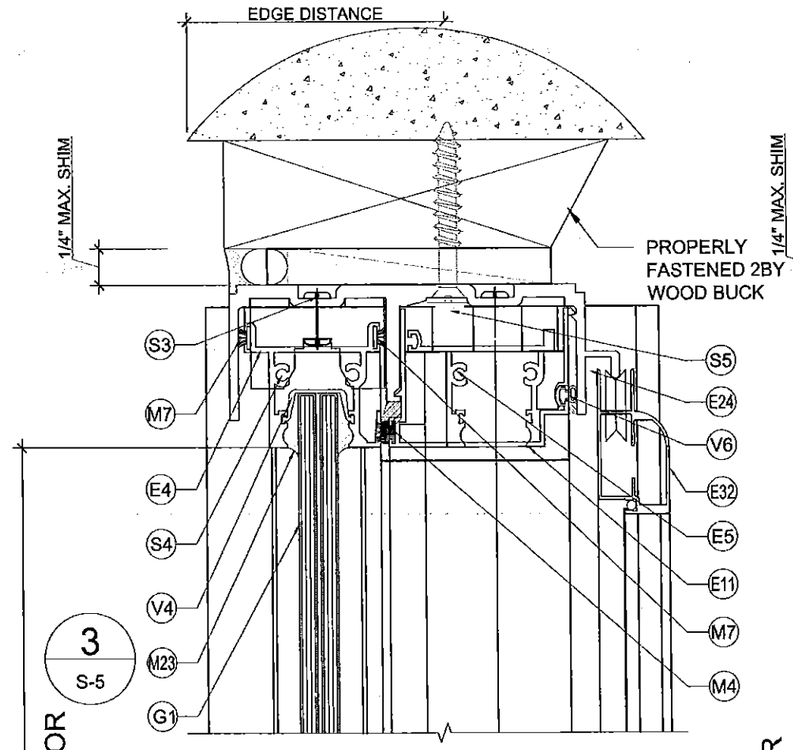


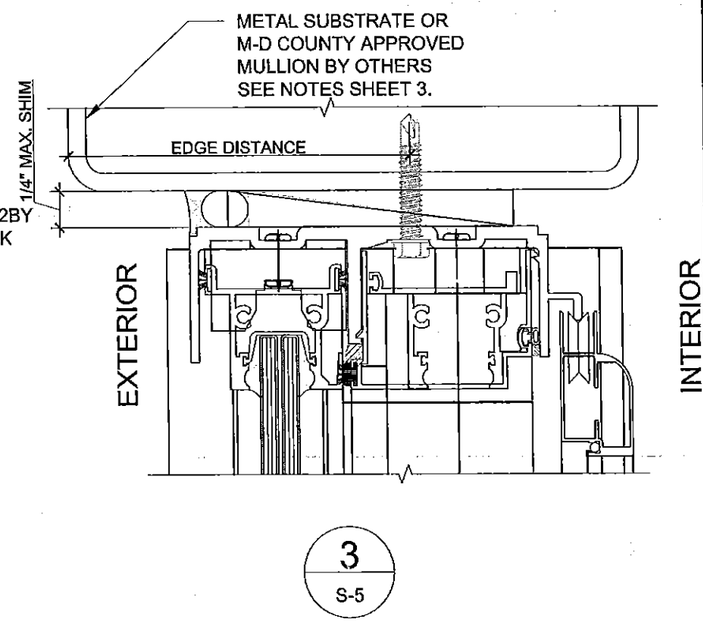


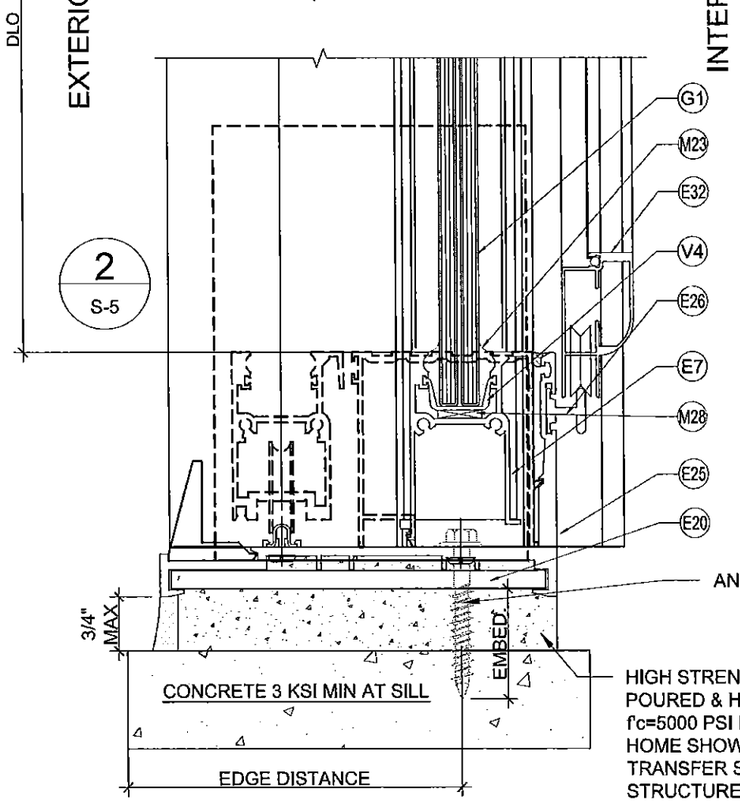


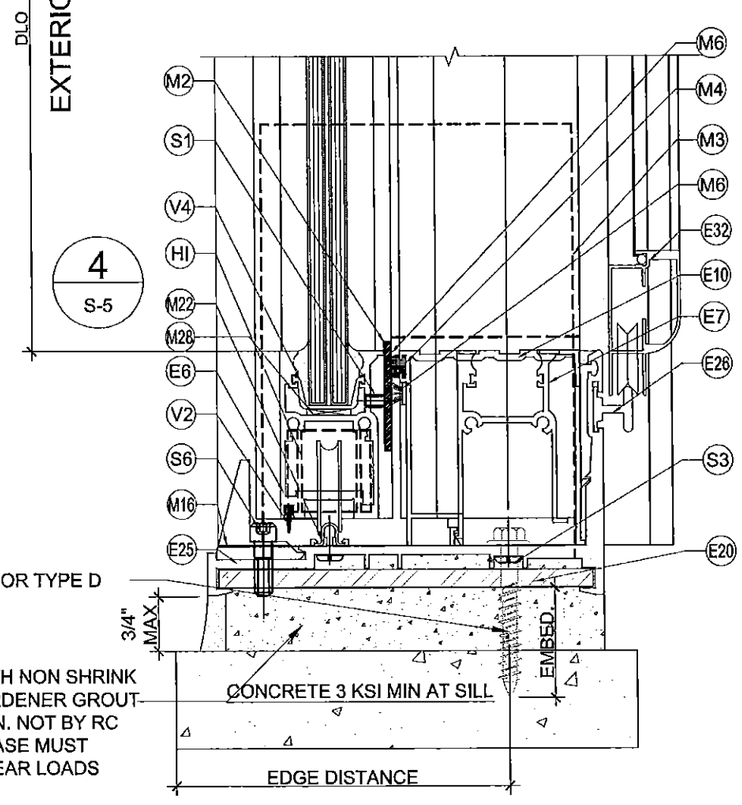


PROPERLY FASTENED 2BY WOOD BUCKS AND METAL STRUCTURES NOT BY RC HOME SHOWCASE MUST SUPPORT LOADS IMPOSED BY GLAZING SYSTEM TRANSFER THEM TO THE BUILDING STRUCTURE.

CONCRETE AT HEAD, SILL OR JAMBS 3KSI MIN.
GROUT FILLED C90 BLOCK AT JAMB MIN

## TYPICAL SECTIONS

SCALE: 6"=1'-0"

PRODUCT REVISED
to complying with the Florida
Building Code
Acceptance No. 16-0112.01
Expiration Date 11/25/2020
By
Miami-Dade Product Control


EASTERN ENGINEERING GROUP
3401 NW 82 AVE SUITE 370 Miami, Florida 33122
Tel. (305) 599-8133 Fax. (305) 599-8076
www.easternegg.com
☐ RAISSA R. LOPEZ, PE (Lic No-59399)
☐ GONZALO A. PAZ, PE (Lic No-60734)
CERT. OF AUTHORIZATION No. 26555


REVISIONS

| No. | DATE | DESCRIPTION |
|---|---|---|
| | | |

Drawing NO. 14 405

DESIGNED & DRAWN: EC_JM

SCALE : AS SHOWN

Products: SERIES CS240 ALUM. SLD. GLASS DOOR (S.M.I.)


RC HOME SHOWCASE
16115 NW 52nd Ave.
Miami Gardens, FL 33014
Phone: (305) 392 - 6214
Fax: (305) 260 - 6432


1/11/2016

SHEET: 5 OF 11

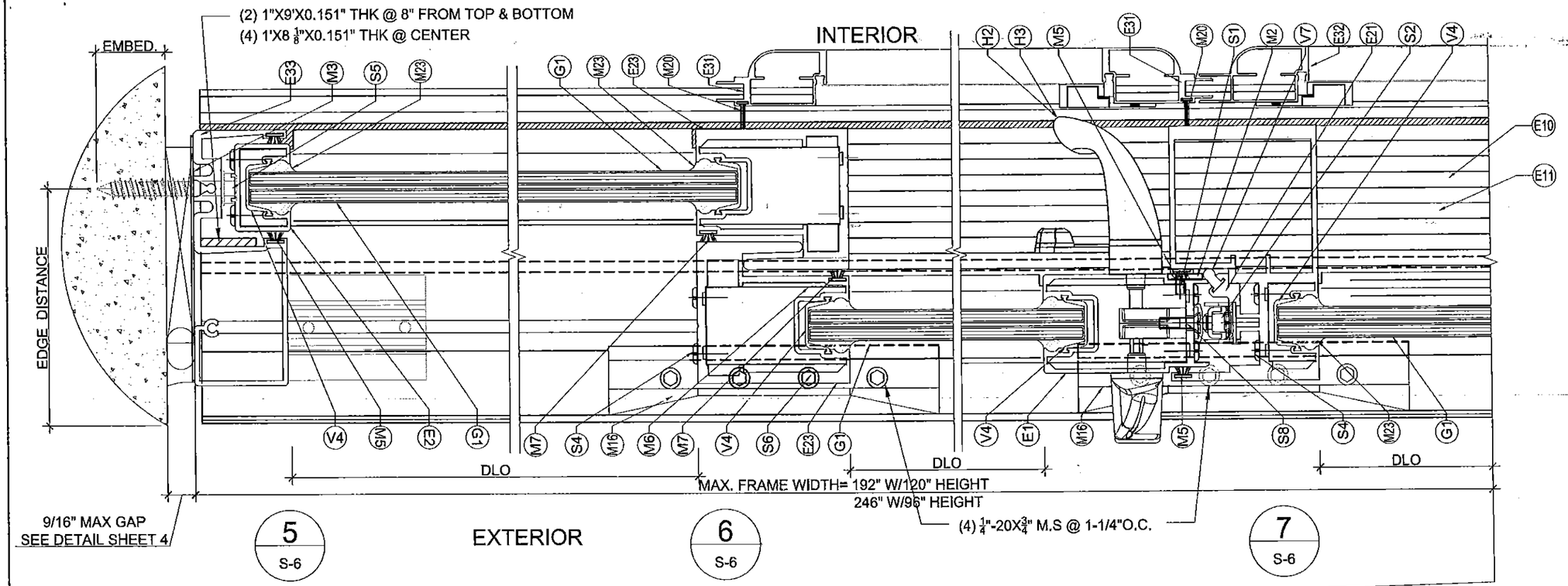


## HORIZONTAL SECTION SGD(OXXO)

SCALE: 6"=1'-0"

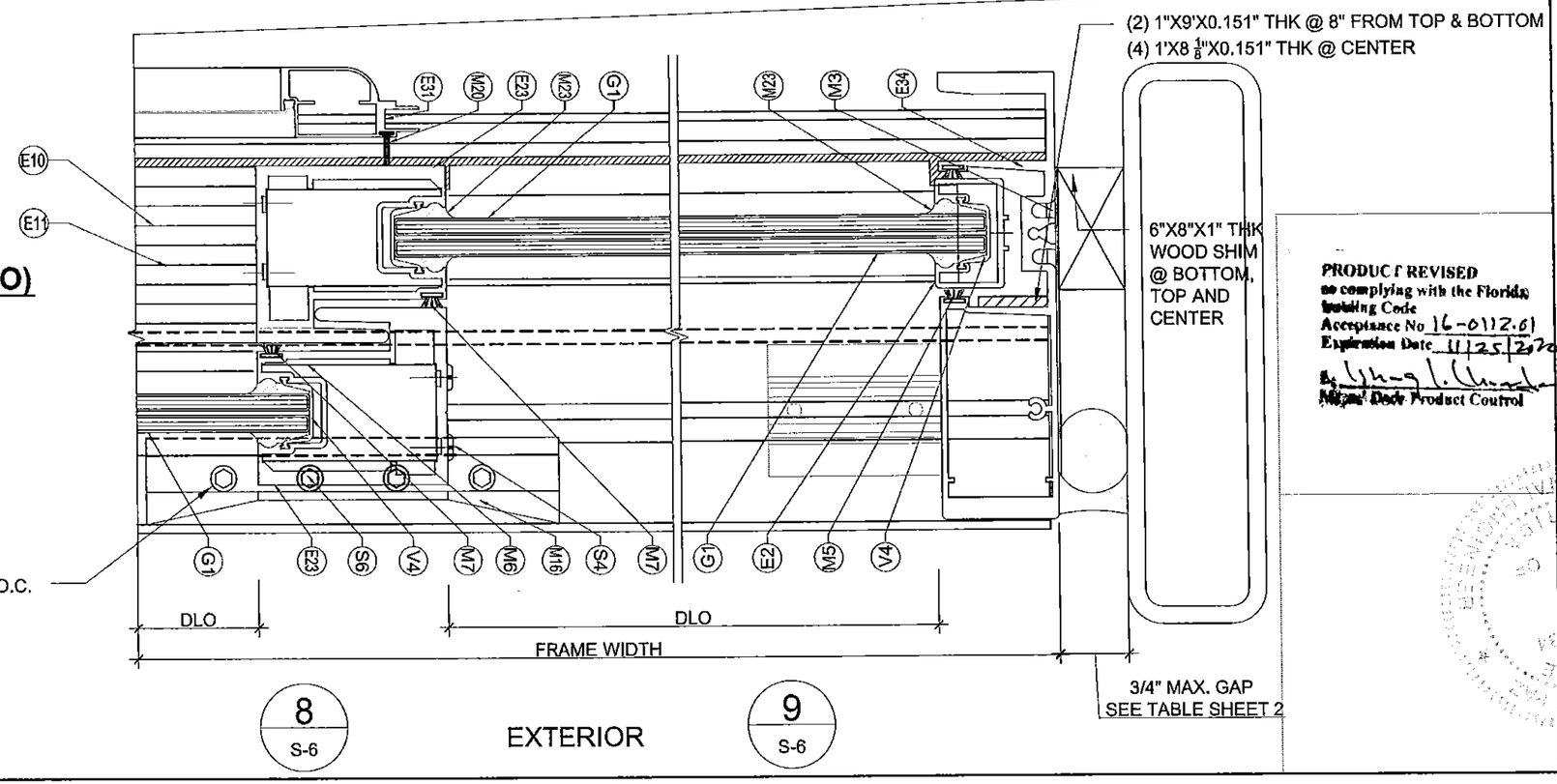


PRODUCT REVISED
in complying with the Florida
Building Code
Acceptance No 16-0112.01
Expiration Date 11/25/2020
By
Miami-Dade Product Control

EASTERN ENGINEERING GROUP
3401 NW 82 AVE SUITE 370 Miami, Florida 33122
Tel. (305) 599-8133 Fax. (305) 599-8076
www.easterneng.com
RAISSA R. LOPEZ, PE (Lic No-59399)
GONZALO A. PAZ, PE (Lic No-60734)
CERT. OF AUTHORIZATION No. 26655

REVISIONS

| No. | DATE | DESCRIPTION |
|---|---|---|
| | | |

Drawing NO. 14 405
DESIGNED & DRAWN: EC_JM
SCALE : AS SHOWN

Product: SERIES CS240 ALUM. SLD. GLASS DOOR (S.M.I.)

RC HOME SHOWCASE
ALUMINUM WINDOWS AND DOORS
16115 NW 52nd Ave.
Miami Gardens, FL 33014
Phone: (305) 392 - 6214
Fax: (305) 260 - 6432

1/11/2016

SHEET: 6 OF 11

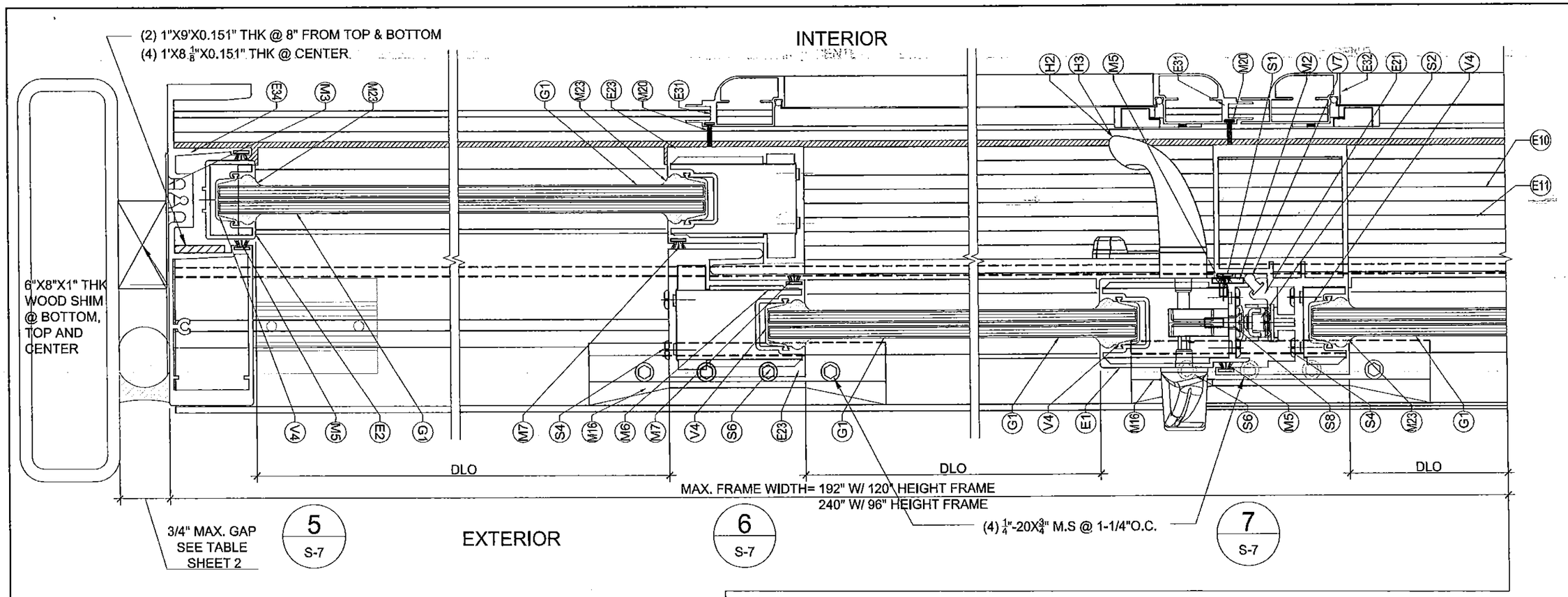


## HORIZONTAL SECTION SGD( OXO)

SCALE: 6"=1'-0"

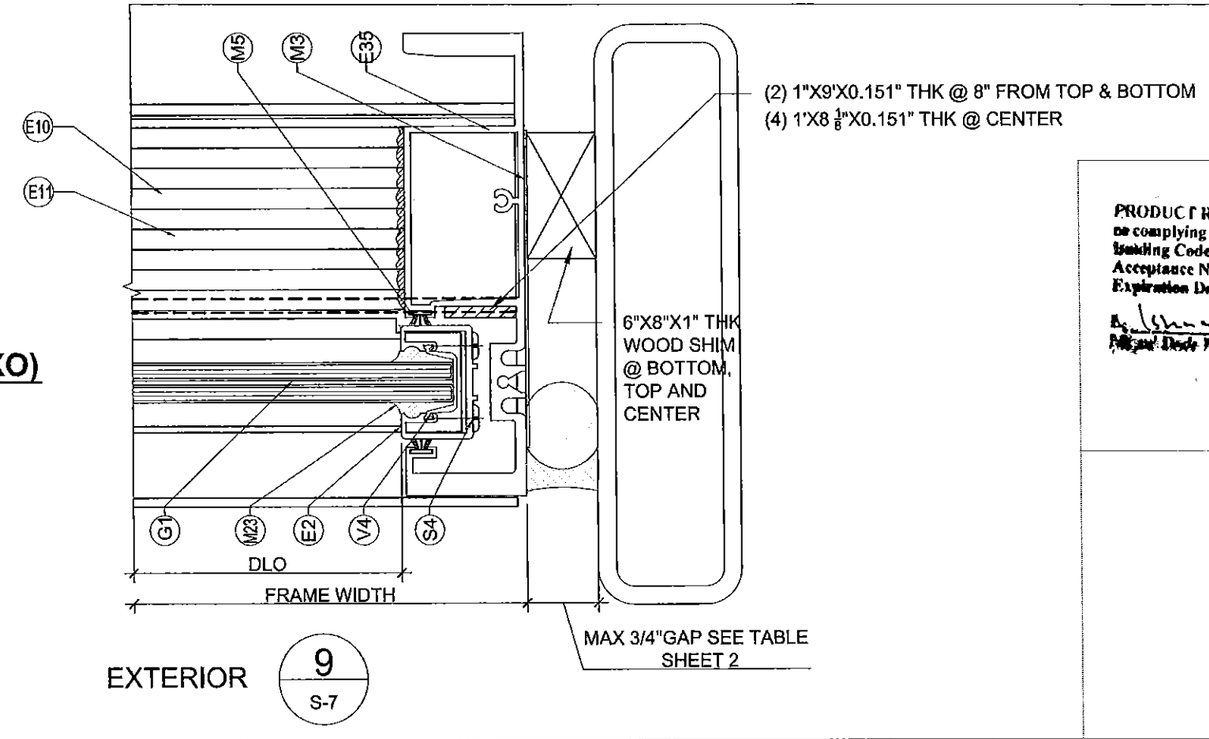


PRODUCT REVISED
to complying with the Florida
Building Code
Acceptance No 16-0412.01
Expiration Date 11/25/2020
By
Miami-Dade Product Control


EASTERN ENGINEERING GROUP
3407 NW 82 AVE SUITE 370 Miami, Florida 33122
Tel. (305) 599-8133 Fax. (305) 599-8076
www.easternegroup.com
☐ RAISSA R. LOPEZ, PE (Lic No-59399)
☐ GONZALO A. PAZ, PE (Lic No-60734)
CERT. OF AUTHORIZATION No. 26655


REVISIONS

| No. | DATE | DESCRIPTION |
|---|---|---|
| | | |

Drawing NO. 14 405

DESIGNED & DRAWN: EC_JM

SCALE : AS SHOWN

Product: SERIES CS240 ALUM. SLD. GLASS DOOR (S.M.I.)


RC HOME SHOWCASE ALUMINUM WINDOWS AND DOORS
16115 NW 52nd Ave.
Miami Gardens, FL 33014
Phone: (305) 392 - 6214
Fax: (305) 260 - 6432


/11/2016

SHEET: 7 OF 11

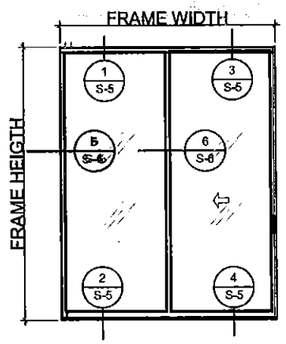


S.G.D OX

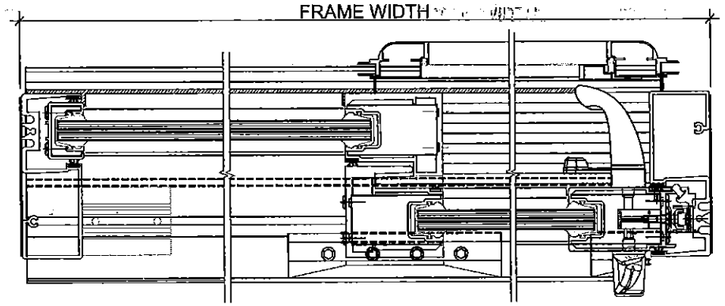


EXTERIOR

## CONFIGURATION OPTIONS

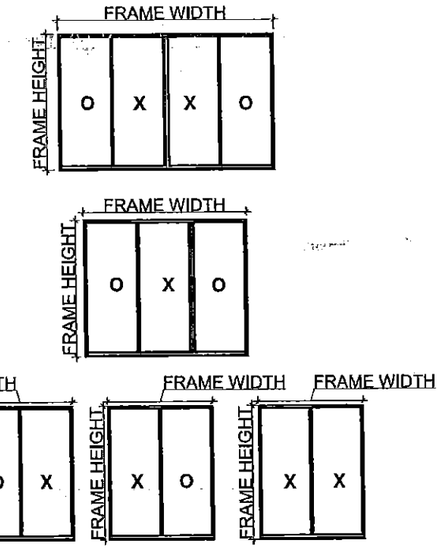


ILLUSTRATION PURPOSES ONLY.
SEE ILLUSTRATION AT SHEETS
4-7 FOR INSTALLATION

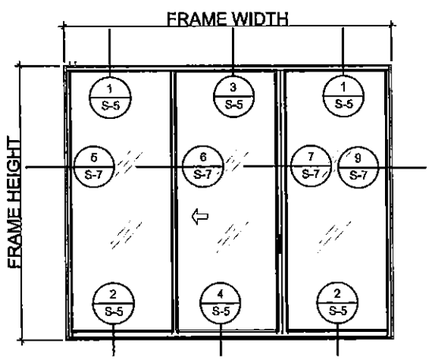


S.G.D OXO

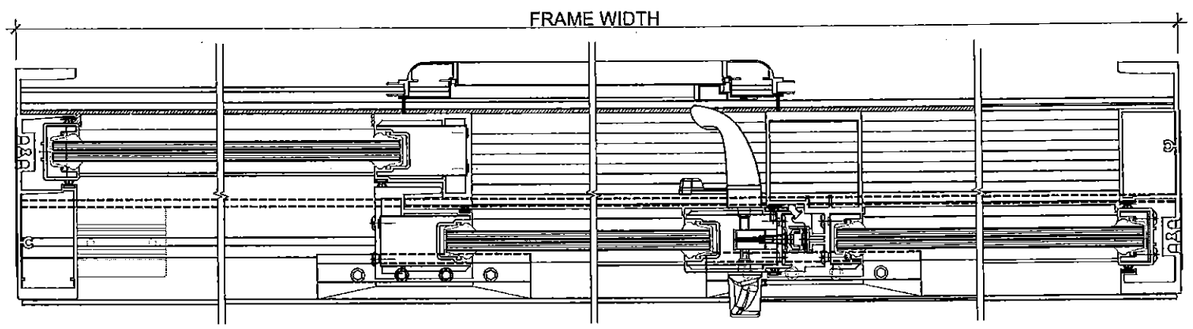


EXTERIOR

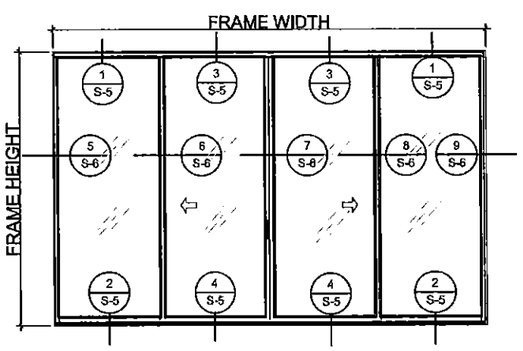


SGD (OXXO) (MAX 4 PANEL CONFIGURATION)

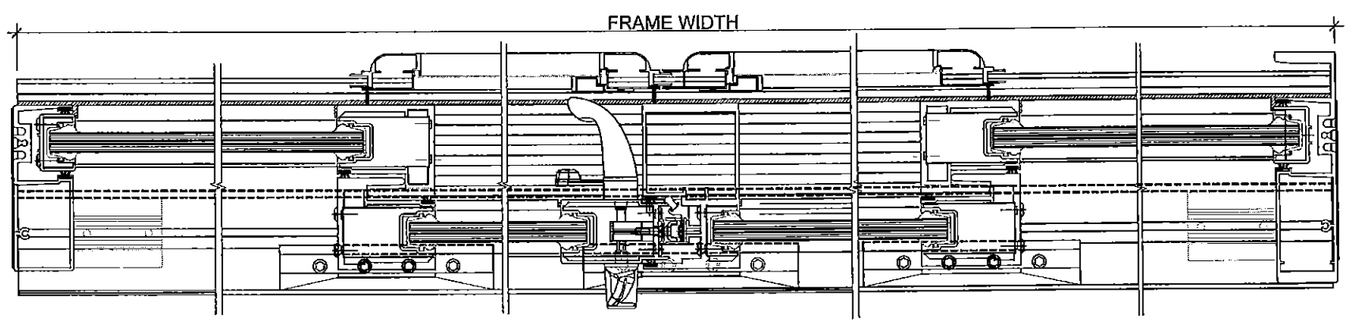


EXTERIOR

**PRODUCT REVISED**
**to complying with the Florida**
**Building Code**
**Acceptance No** 16-0112.01
**Expiration Date** 11/25/2020
**By** [illegible]
**Miami-Dade Product Control**


EASTERN ENGINEERING GROUP
3401 NW 82 AVE SUITE 370 Miami, Florida 33122
Tel. (305) 599-8133 Fax. (305) 599-8076
www.easternegg.com
☐ RAISSA R. LOPEZ, PE (Lic No-59399)
☐ GONZALO A. PAZ, PE (Lic No-60734)
CERT. OF AUTHORIZATION No. 26655


REVISIONS

| No. | DATE | DESCRIPTION |
|---|---|---|
| | | |

Drawing NO. 14 405

DESIGNED & DRAWN: EC_JM

SCALE : AS SHOWN

Product: SERIES CS240 ALUM. SLD. GLASS DOOR (S.M.I.)


RC HOME SHOWCASE
16115 NW 52nd Ave.
Miami Gardens, FL 33014
Phone: (305) 392 - 6214
Fax: (305) 260 - 6432


/11/2016

SHEET: 8 OF 11

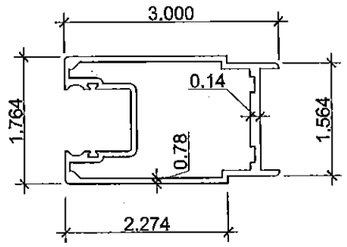


E1 LOCK STILE

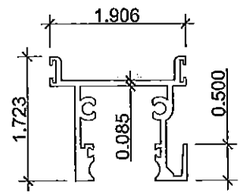


E4 MOVING TOP RAIL

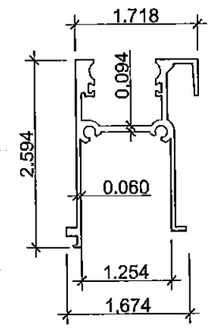


E7 FIXED BOTTOM RAIL

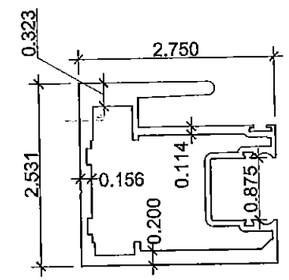


E23 INTERLOCK STILE

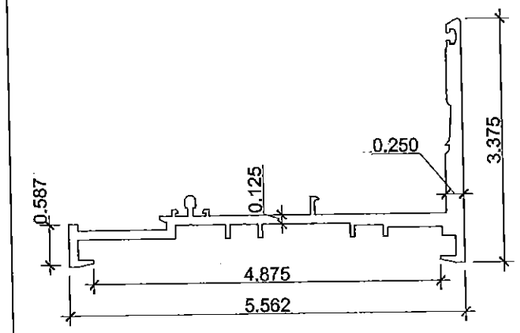


E29 SILL TRACK (WITHOUT SCREEN)

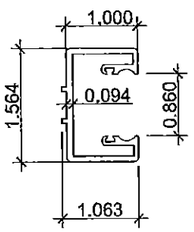


E2 FIXED JAMB STILE

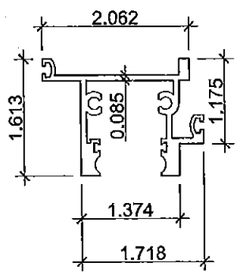


E5 FIXED TOP RAIL

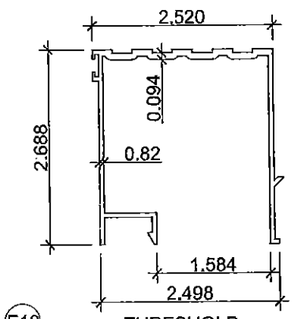


E10 THRESHOLD

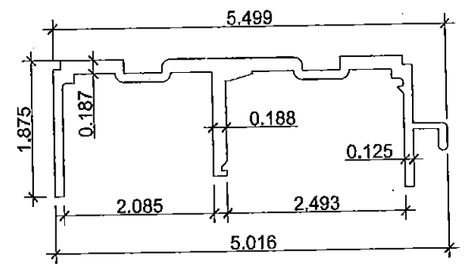


E24 FRAME HEAD

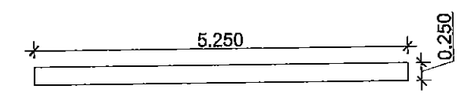


E20 SILL TRACK PLATE

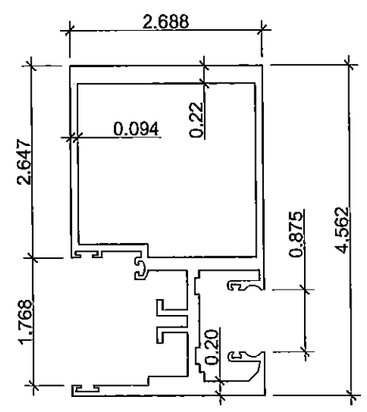


E3 MEETING STILE

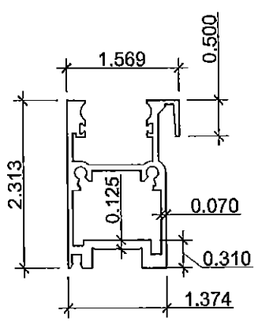


E6 MOVING BOTTOM RAIL

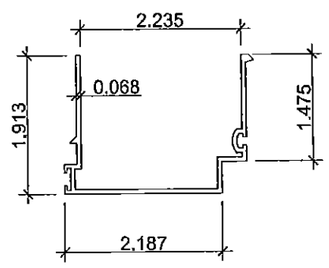


E11 HEAD ADAPTOR

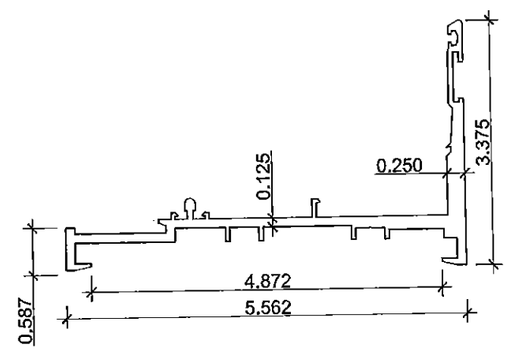


E25 SILL TRACK

**PRODUCT REVISED**
**to complying with the Florida**
**Building Code**
**Acceptance No** 16-0112.01
**Expiration Date** 11/25/2020
**Miami-Dade Product Control**

EASTERN ENGINEERING GROUP
3401 NW 82 AVE SUITE 370 Miami, Florida 33122
Tel. (305) 599-8133 Fax. (305) 599-8076
www.easternegg.com
☐ RAISSA R. LOPEZ, PE (Lic No-59399)
☐ GONZALO A. PAZ, PE (Lic No-60734)
CERT. OF AUTHORIZATION No. 26555

REVISIONS

| No. | DATE | DESCRIPTION |
|---|---|---|
| | | |

Drawing NO. 14 405
DESIGNED & DRAWN: EC_M
SCALE : AS SHOWN

SERIES CS240 ALUM. SLD. GLASS DOOR (S.M.I.)
Product:

RC HOME SHOWCASE
16115 NW 52nd Ave.
Miami Gardens, FL 33014
Phone: (305) 392 - 6214
Fax: (305) 260 - 6432

1/11/2016

SHEET: 9 OF 11

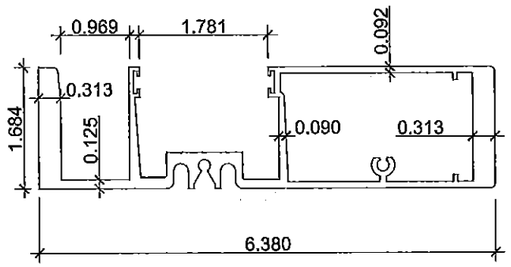


E34 FRAME JAMB FIXED SIDE

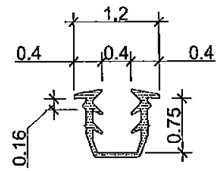


V8 GLAZING GASKET

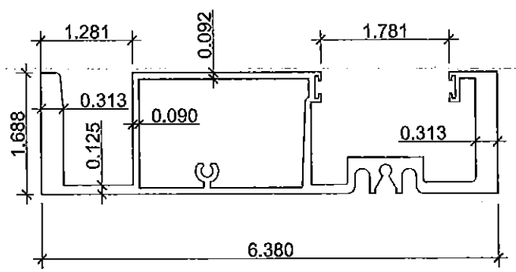


E35 FRAME JAMB OPERABLE SIDE

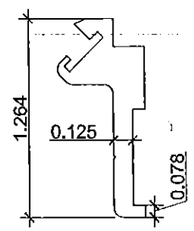


E21 TRESHOLD SEAL

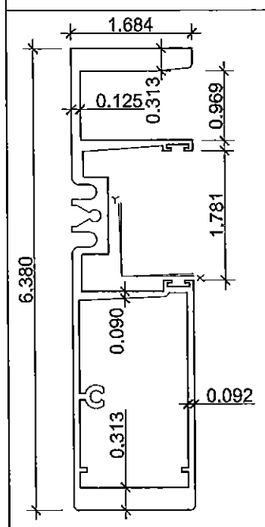


Area = 2.5171 in^2
Ixx = 13.0241 in^4
Sxx min = 4.0313 in^3

E34 FRAME JAMB FIXED SIDE

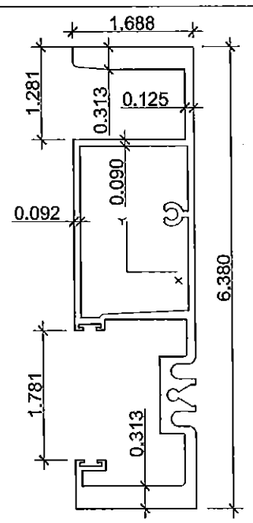


Area = 2.5270 in^2
Ixx = 13.3353 in^4
Sxx min = 4.0509 in^3

E35 FRAME JAMB OPERABLE SIDE

| CODE | PART No./ MANUFACTURER | DESCRIPTION |
|---|---|---|
| | | EXTRUSIONS |
| E1 | CS240-002 | LOCK STILE (AL.6063-T6) |
| E2 | CS240-004 | FIXED JAMB STILE (AL.6063-T6) |
| E3 | CS240-005 | MEETING STILE (AL.6063-T6) |
| E4 | CS240-006 | MOVING TOP RAIL (AL.6063-T6) |
| E5 | CS240-007 | FIXED TOP RAIL (AL.6063-T6) |
| E6 | CS240-069 | MOVING BOTTOM RAIL FOR NEW ROLLER (AL.6063-T6) |
| E7 | CS240-009 | FIXED BOTTOM RAIL (AL.6063-T6) |
| E10 | CS240-012 | THRESHOLD (AL 6063-T6) |
| E11 | CS240-019 | HEAD ADAPTOR (AL. 6063-T6) |
| E20 | CS240-031 | SILL TRACK PLATE (AL.6063-T6) |
| E21 | 2400ST-032 | MEETING RAIL THRESHOLD SEAL |
| E23 | CS240-037 | INTERLOCK STILE (AL.6063-T6) |
| E24 | CS240-038 | FRAME HEAD W/INTEGRAL SCREEN TRACK (AL. 6063-T6) |
| E25 | CS240-082 | SILL TRACK (with screen) (AL.6063-T6) |
| E26 | CS240-040 | INSIDE SCREEN TRACK |
| E29 | CS240-088 | SILL TRACK (without screen) |
| E31 | CS240-056 | SCREEN VERTICAL JAMB |
| E32 | CS240-057 | SCREEN TOP & BOTTOM RAIL |
| E33 | CS240-042 | FRAME JAMB |
| E34 | CS240-071 | FRAME JAMB FIXED SIDE (UNANCHORED JAMB) |
| E35 | CS240-072 | FRAME JAMB OPERABLE SIDE (UNANCHORED JAMB) |
| | | VINYLS |
| V1 | V-017 | MARINE GLAZING FOR 9/16" THK. GLASS LMI |
| V2 | V-019 | DRIP SILL VINYL @ (CS240-069) |
| V4 | V-020 | MARINE GLAZING FOR 9/16" THK. GLASS LMI |
| V7 | V-027 | BULB VINYL WSTP AT MEETING RAIL THRESHOLD |
| V8 | TEKNOR APEX COMPANY | MARINE GLAZED SURROUND GASKET W/ WET SILICONE @ BOTH SIDE OF GLASS +- 75.00 SHORE A (SARLINK TPV 5765B) |
| | | SCREWS |
| S1 | | #8 X 3/8" LG. FH. SMS. ST/ST @ 4 PANELS ONLY |
| S2 | | #10 X 1/2" LG. PH. SMS ST/ST A.S. FOR MEETING ST. THRESH. |
| S3 | | #10 X 1" LG. PH. SMS PLATED ASSEMBLY SCREW FOR FRAME |
| S4 | | #10X1 1/2" LG. PH. SMS. ST/ST ASS. SC.FOR PANELS |
| S5 | | 1/4"Ø-20 X 2 1/2" LG. HD. HX. KWIK-FLEX INSTALLATION SCREWS |
| S6 | | 1/4-20 X 3/4" LG. SOCKET HEAD CAP SCREW ST/ST NONMAGN. |
| S7 | | #8 X 1/2" LG. PH. SMS. ST/ST |
| S8 | | #10 X 3/4" LG. FH. SMS ST/ST FOR HARDWARE |
| S9 | | #10 X 3/4" LG. PH. SMS ST/ST SCREW @ M1 |
| S10 | | 1/4"Ø X 2 3/4" LG. HD. HX. KWIK-CONS. INSTALL. SCREW |
| | | HARDWARE |
| H1 | PR03-600 | HIGH PRECISION SIDE AJUSTABLE ST/ST ROLLER STEEL PLATE WHEELS |
| H2 | PS01-0001-XXX | 2 POINT KIT N/L |
| H3 | PS01-0002-XXX | 2 POINT KIT EXTERIOR LOCKING |
| H4 | 191014 | 2 POINT MORTISE LOCK |
| | | MISCELANEOUS |
| M1 | P-046 | 1.250"X1.883"X4" LONG DOOR BUMPER @ (CS240-038) |
| M2 | | 5/8" X 1 1/2" X 0.100 THK.ALUM.PLATE PAINTED @ CS240-002 |
| M3 | | 4 3/8" X 6" X 0.040 THK. ALUM. PLATE PAINTED @ CS240-042 |
| M4 | U56 | Q 275 X 270 W/B @ (CS240-012) (CS240-019) |
| M5 | W21225NK | ULTRAFAB. SERIES VERTICALLY @ (CS240-042) (CS240-005) |
| M6 | P3802AFK | ULTRAFAB SERIES WSTP @ (CS240-037) (CS240-012) |
| M7 | W31245NK | ULTRAFAB SERIES WSTP @ (CS240-037) & (CS240-006) |
| M16 | PS01-5001-XXX/SLA-2400-12W | SILL ANCHOR |
| M19 | A-4 | 3/4"X3/4"X1/16" THK. ALUM. TUBE 1" LONG (TEMPORARY) |
| M20 | W14551NW | ULTRAFAB SERIES WSTP VERTICALLY @ (CS240-056) |
| M21 | CD-690S | SCREEN CORNER LOCK AND ROLLER |
| M22 | | STAINLESS STEEL TRACK COVER 0.031 THK. @ 2400ST-082 |
| M23 | DC995 | STRUCTURAL SILICONE |
| M28 | | SETTING BLOCK |
| | | GLASS |
| GB | 9/16"THK. LAM. GL. | 1/4" H.S. OUTSIDE + 0.060 BUTACITE PVB + 1/4" H.S. INSIDE |
| GA | 9/16"THK. LAM. GL. | 1/4" H.S. OUTSIDE + 0.035 SG INTERLAYER + 1/4" H.S. INSIDE |

PRODUCT REVISED
Complying with the Florida Building Code
Acceptance No. 16-0112.01
Expiration Date 11/25/2020
Dade Product Control


EASTERN ENGINEERING GROUP
3401 NW 82 AVE SUITE 370 Miami, Florida 33122
Tel. (305) 599-8133 Fax. (305) 599-8076
www.easterneg.com
RAISSA R. LOPEZ, PE (Lic No-59399)
GONZALO A. PAZ, PE (Lic No-60734)
CERT. OF AUTHORIZATION No. 26655


REVISIONS

| No. | DATE | DESCRIPTION |
|---|---|---|
| | | |

Drawing NO. 14 405
DESIGNED & DRAWN: EC_JM
SCALE : AS SHOWN

Product: SERIES CS240 ALUM. SLD. GLASS DOOR (S.M.I.)


RC HOME SHOW/CASE ALUMINUM WINDOWS AND DOORS
16115 NW 52nd Ave.
Miami Gardens, FL 33014
Phone: (305) 392 - 6214
Fax: (305) 260 - 6432


1/11/2016

SHEET: 10 OF 11

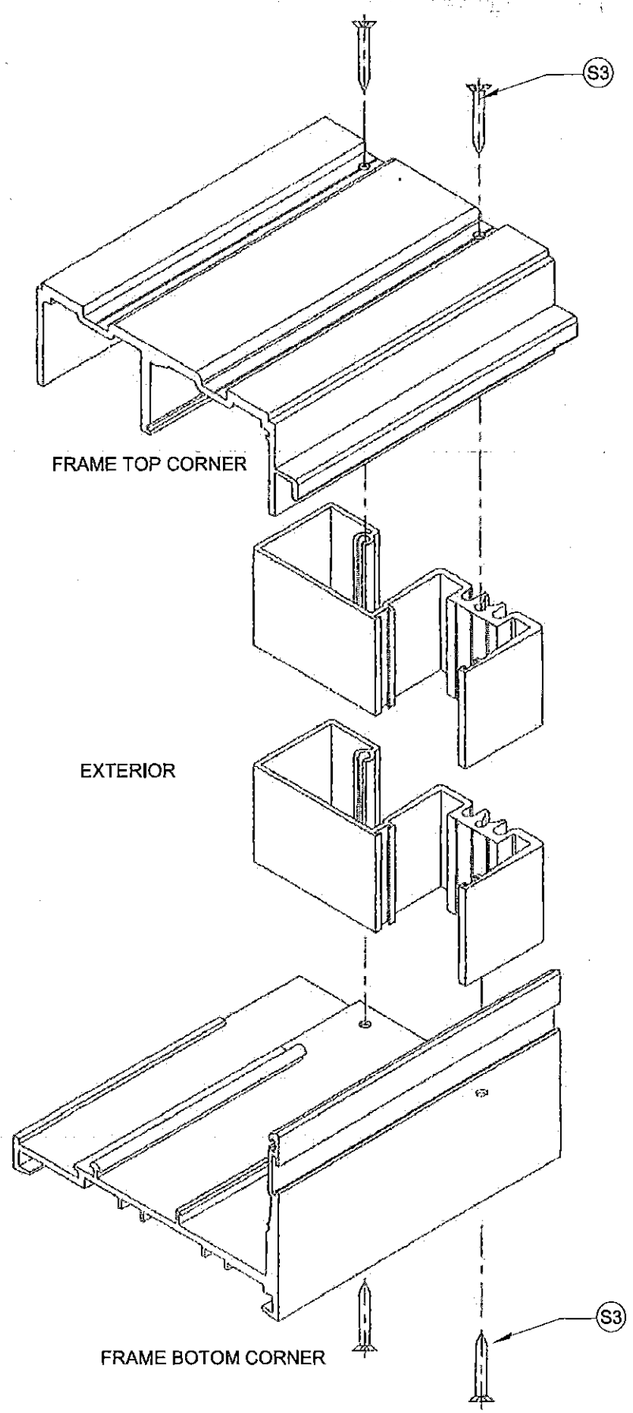


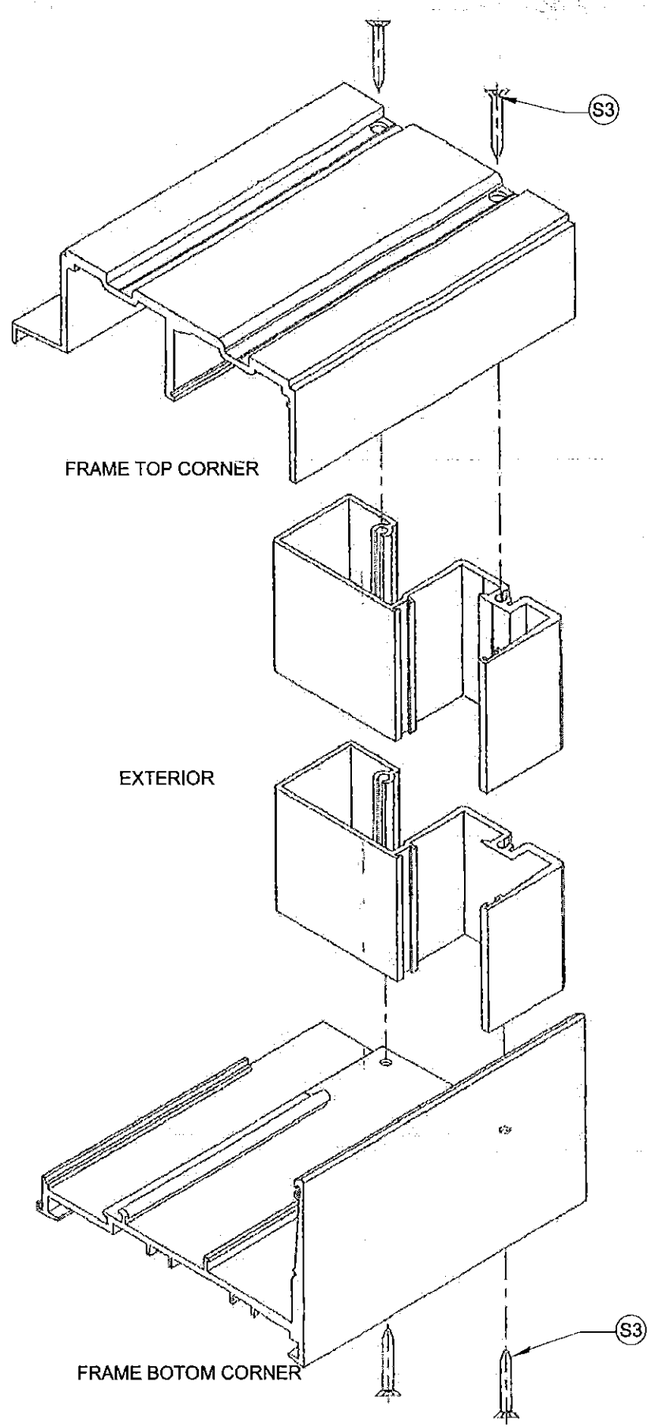


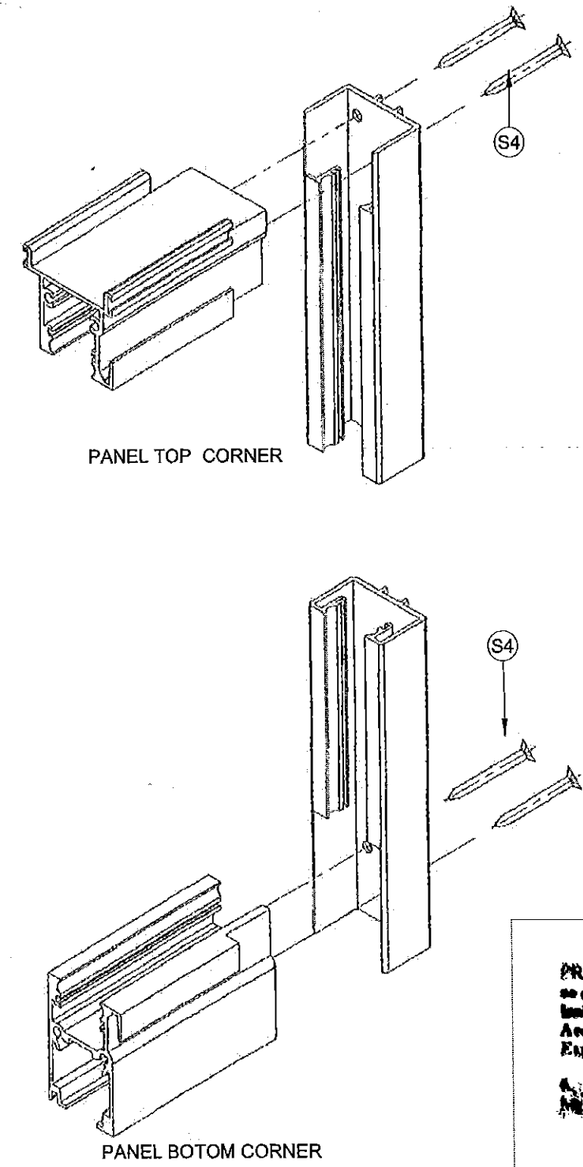


**PRODUCT REVISED**
**in complying with the Florida Building Code**
**Acceptance No** 16-0112.01
**Expiration Date** Nov 25, 2020
**Approval Date** Product Control

EASTERN ENGINEERING GROUP
3401 NW 82 AVE SUITE 370 Miami, Florida 33122
Tel. (305) 599-8133 Fax. (305) 599-8076
www.easternengg.com

☐ RAISSA R. LOPEZ, PE (Lic No-59399)
☐ GONZALO A. PAZ, PE (Lic No-60734)
CERT. OF AUTHORIZATION No. 26655

REVISIONS

| No. | DATE | DESCRIPTION |
|---|---|---|
| | | |

Drawing NO. 14 405
DESIGNED & DRAWN: EC_JM
SCALE : AS SHOWN

Product: SERIES CS240 ALUM. SLD. GLASS DOOR (S.M.I.)

RC HOME SHOW/CASE
ALUMINUM WINDOWS AND DOORS
16115 NW 52nd Ave.
Miami Gardens, FL 33014
Phone: (305) 392 - 6214
Fax: (305) 280 - 6432

1/11/2016

SHEET: 11 OF 11