MIAMI-DADE COUNTY
PRODUCT CONTROL SECTION
11805 SW 26 Street, Room 208
Miami, Florida 33175-2474
T (786) 315-2590 F (786) 315-2599
www.miamidade.gov/economy

DEPARTMENT OF REGULATORY AND ECONOMIC RESOURCES (RER)
BOARD AND CODE ADMINISTRATION DIVISION

NOTICE OF ACCEPTANCE (NOA)

Entegra Roof Tile, LLC
1289 NE 9th Ave
Okeechobee, FL 34972

SCOPE:

This NOA is being issued under the applicable rules and regulations governing the use of construction materials. The documentation submitted has been reviewed and accepted by Miami-Dade County RER -Product Control Section to be used in Miami-Dade County and other areas where allowed by the Authority Having Jurisdiction (AHJ).

This NOA shall not be valid after the expiration date stated below. The Miami-Dade County Product Control Section (in Miami-Dade County) and/or the AHJ (in areas other than Miami-Dade County) reserve the right to have this product or material tested for quality assurance purposes. If this product or material fails to perform in the accepted manner, the manufacturer will incur the expense of such testing and the AHJ may immediately revoke, modify, or suspend the use of such product or material within their jurisdiction. RER reserves the right to revoke this acceptance, if it is determined by Miami-Dade County Product Control Section that this product or material fails to meet the requirements of the applicable building code.

This product is approved as described herein, and has been designed to comply with the Florida Building Code including the High Velocity Hurricane Zone of the Florida Building Code.

DESCRIPTION: Bella "High S" Tile

LABELING: Each unit shall bear a permanent label with the manufacturer's name or logo, city, state and following statement: "Miami-Dade County Product Control Approved", unless otherwise noted herein.

RENEWAL of this NOA shall be considered after a renewal application has been filed and there has been no change in the applicable building code negatively affecting the performance of this product.

TERMINATION of this NOA will occur after the expiration date or if there has been a revision or change in the materials, use, and/or manufacture of the product or process. Misuse of this NOA as an endorsement of any product, for sales, advertising or any other purposes shall automatically terminate this NOA. Failure to comply with any section of this NOA shall be cause for termination and removal of NOA.

ADVERTISEMENT: The NOA number preceded by the words Miami-Dade County, Florida, and followed by the expiration date may be displayed in advertising literature. If any portion of the NOA is displayed, then it shall be done in its entirety.

INSPECTION: A copy of this entire NOA shall be provided to the user by the manufacturer or its distributors and shall be available for inspection at the job site at the request of the Building Official.

This NOA renews NOA No. 14-1120.05 and consists of pages 1 through 5.
The submitted documentation was reviewed by Gaspar J Rodriguez.

MIAMI-DADE COUNTY APPROVED

ROOFING ASSEMBLY APPROVAL

Category: Roofing
Sub-Category: Roofing Tiles
Material: Concrete
Deck Type: Wood

1. SCOPE

This approves a roofing system using Entegra Bella "High S" concrete roof tile as manufactured in Okeechobee, FL and described in Section 2 of this Notice of Acceptance. For use in locations where the pressure requirements, as determined by applicable Building Code, do not exceed the design pressure values obtained by calculations in compliance with RAS 127 using the values listed in section 4 herein. The attachment calculations shall be prepared as a moment based system.

2. PRODUCT DESCRIPTION

Manufactured by Applicant	Dimensions	Test Specifications	Product Description
Bella "High S"	Length = 16 ½" Width = 13-$^{1}/_{4}$" Thickness = ½"	TAS 112 Type 2 Class II	High profile, interlocking, extruded concrete roof tile equipped with two nail holes. For mechanical, mortar or adhesive set applications.
Trim Pieces	l = varies w = varies varying thickness	TAS 112	Accessory trim, concrete roof pieces for use at hips, rakes, ridges and valley terminations.

2.1 MANUFACTURING LOCATION

1. Okeechobee, FL

2.2 EVIDENCE SUBMITTED

Test Agency	Test Identifier	Test Name/Report	Date
The Center for Applied Engineering, Inc.	25-7094-(3, 6 & 9)	Static Uplift Testing TAS 102	Oct. 1994
The Center for Applied Engineering, Inc.	25-7120-(1 & 2)	Static Uplift Testing TAS 102	Nov. 1994
The Center for Applied Engineering, Inc.	25-7183-(3 & 4)	Static Uplift Testing TAS 102	Feb. 1995
The Center for Applied Engineering, Inc.	25-7214-(3, 4, &7)	Static Uplift Testing TAS 102	March, 1995
The Center for Applied Engineering, Inc.	25-7804-4	Static Uplift Testing TAS 102	Sep. 1996
Celotex Corporation Testing Services	520111-3	Static Uplift Testing TAS 101	Dec. 1998
Celotex Corporation Testing Services	520191-2-1	Static Uplift Testing TAS 101	March 1999
Walker Engineering, Inc.	Calculations	Aerodynamic Multiplier	March 1999

2.2 EVIDENCE SUBMITTED

Test Agency	Test Identifier	Test Name/Report	Date
Walker Engineering, Inc.	Calculations	Restoring Moment	June 2007
IBA Consultants, Inc.	2421-94	ASTM C 1167	June 2006
American Test Lab of South Florida	RT1210.03-15	TAS 112-95	Dec 2015

3. LIMITATIONS:

3.1 Fire classification is not part of this acceptance.

3.2 For mortar or adhesive set tile applications, a static field uplift test in accordance with TAS 106 may be required, refer to applicable building code.

3.3 Applicant shall retain the services of a Miami-Dade County Certified Laboratory to perform quarterly test in accordance with TAS 112, appendix 'A'. Such testing shall be submitted to the Miami-Dade Product Control Section for review.

3.4 Minimum underlayment shall be in compliance with the applicable Roofing Applications Standards listed section 4.1 herein.

3.5 30/90 hot mopped underlayment applications may be installed perpendicular to the roof slope unless stated otherwise by the underlayment material manufacturers published literature.

3.6 This acceptance is for wood deck applications. Minimum deck requirements shall be in compliance with applicable building code.

4. INSTALLATION

4.1 Entegra Sales, Inc.'s Bella "High S" concrete roof tile and its components shall be installed in strict compliance with Roofing Application Standard RAS 118, RAS 119 and RAS 120.

4.2 Data For Attachment Calculations

Table 1: Average Weight (W) and Dimensions (l x w)			
Tile Profile	**Weight-W (lbf)**	**Length-l (ft)**	**Width-w (ft)**
Bella "High S" Tile	10.5	1.375	1.08

Table 2: Aerodynamic Multipliers - λ (ft^3)		
Tile Profile	**λ (ft^3) Batten Application**	**λ (ft^3) Direct Deck Application**
Bella "High S" Tile	0.349	0.378

Table 3: Restoring Moments due to Gravity - M_g (ft-lbf)												
Tile Profile	**2":12"**		**3":12"**		**4":12"**		**5":12"**		**6":12"**		**Greater than 7":12"**	
Bella "High S" Tile	Battens	Direct Deck	Battens	Direct Deck	Battens	Direct Deck	Battens	Direct Deck	Battens	Direct Deck	Battens	Direct Deck
	6.19	6.89	6.11	6.80	5.99	6.67	5.85	6.51	5.68	6.33	5.50	6.13

Table 4: Attachment Resistance Expressed as a Moment - M_f (ft-lbf) for Nail-On Systems				
Tile Profile	**Fastener Type**	**Direct Deck (min 15/32" plywood)**	**Direct Deck (min. 19/32" plywood)**	**Battens**
Bella "High S" Tile	2-10d Ring Shank Nails	28.6	41.2	19.4
	1-10d Smooth or Screw Shank Nail	5.1	6.8	2.8
	2-10d Smooth or Screw Shank Nails	6.9	9.2	7.3
	1 #8 Screw	20.7	20.7	18.1
	2 #8 Screw	43.2	43.2	29.8
	1-10d Smooth or Screw Shank Nail (Field Clip)	23.1	23.1	19.0
	1-10d Smooth or Screw Shank Nail (Eave Clip)	29.3	29.3	24.0
	2-10d Smooth or Screw Shank Nails (Field Clip)	27.6	27.6	38.6
	2-10d Smooth or Screw Shank Nails (Eave Clip)	38.1	38.1	41.8
	2-10d Ring Shank Nails[1]	33.1	48.1	50.9
1. Installation with a 4" tile headlap and fasterners are located a min. of 2½" from head of tile.				

Table 5: Attachment Resistance Expressed as a Moment M_f (ft-lbf) for Two Patty Adhesive Set Systems		
Tile Profile	**Tile Application**	**Minimum Attachment Resistance**
Bella "High S" Tile	Adhesive	29.3[2]
1 See manufactures component approval for installation requirements.		
2 Flexible Products Company TileBond Average weight per patty 10.7 grams. 3M™ 2-Component Foam Roof Tile Adhesive AH-160 Average weight per patty 8 grams.		

Table 6: Attachment Resistance Expressed as a Moment - M_f (ft-lbf) for Single Patty Adhesive Set Systems		
Tile Profile	**Tile Application**	**Minimum Attachment Resistance**
Bella "High S" Tile	3M™ 2-Component Foam Roof Tile Adhesive AH-160	66.5[3]
	3M™ 2-Component Foam Roof Tile Adhesive AH-160	38.7[4]
3 Large patty placement of 63grams of 3M™ 2-Component Foam Roof Tile Adhesive AH-160.		
4 Medium patty placement of 24grams of 3M™ 2-Component Foam Roof Tile Adhesive AH-160.		

Table 7: Attachment Resistance Expressed as a Moment - M_f (ft-lbf) for Mortar Set Systems		
Tile Profile	**Tile Application**	**Attachment Resistance**
Bella "High S" Tile	Mortar Set[5]	24.5
5 Tile-Tite Roof Tile Mortar.		

5. LABELING

5.1 All tiles shall bear the imprint or identifiable marking of the manufacturer's name or logo as seen in detail below, or following statement: "Miami-Dade County Product Control Approved".

OR

ENTEGRA SALES BELLA "HIGH S" CONCRETE TILE LABEL
(LOCATED UNDERNEATH TILE)

BUILDING PERMIT REQUIREMENTS:

As required by the Building Official or the applicable Building Code in order to properly evaluate the installation of this system. This Notice of Acceptance on its own cannot be used to obtain a building permit.

PROFILE DRAWING

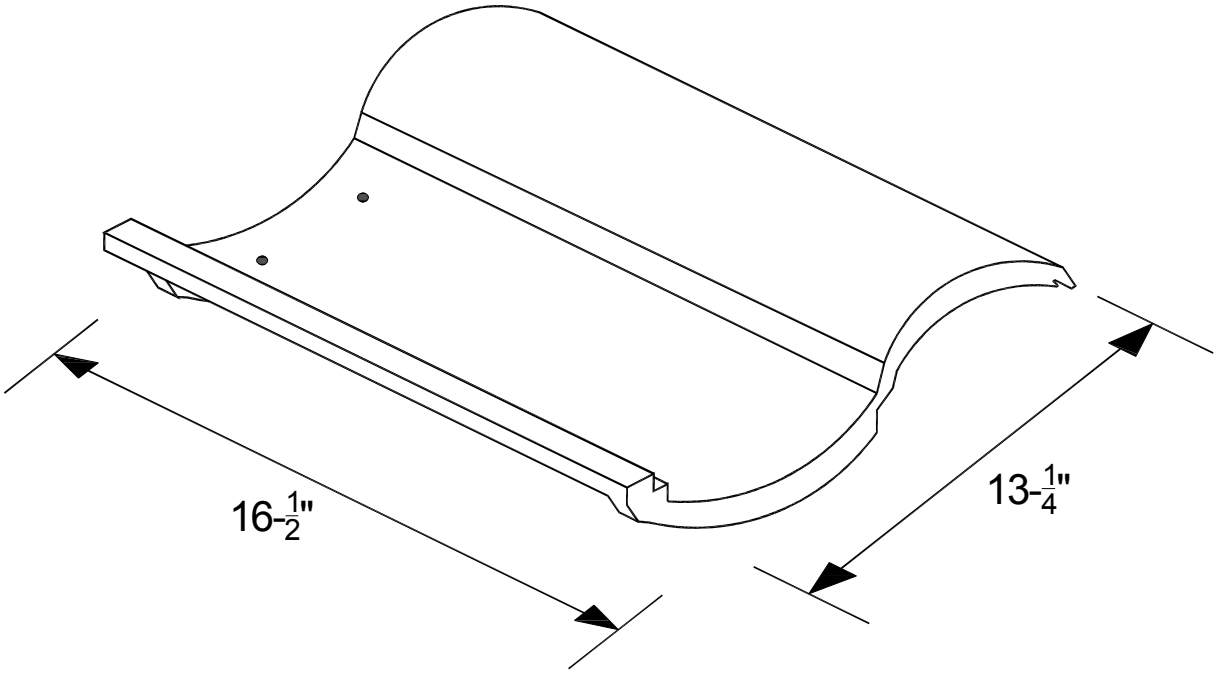

END OF THIS ACCEPTANCE