MIAMI-DADE COUNTY
PRODUCT CONTROL SECTION
11805 SW 26 Street, Room 208
Miami, Florida 33175-2474
T (786) 315-2590 F (786) 315-2599
www.miamidade.gov/economy

DEPARTMENT OF REGULATORY AND ECONOMIC RESOURCES (RER)
BOARD AND CODE ADMINISTRATION DIVISION

NOTICE OF ACCEPTANCE (NOA)

The Airolite Company, LLC.
P.O. Box 410
Schofield, WI 54476

SCOPE:

This NOA is being issued under the applicable rules and regulations governing the use of construction materials. The documentation submitted has been reviewed and accepted by Miami-Dade County RER-Product Control Section to be used in Miami Dade County and other areas where allowed by the Authority Having Jurisdiction (AHJ).

This NOA shall not be valid after the expiration date stated below. The Miami-Dade County Product Control Section (In Miami Dade County) and/or the AHJ (in areas other than Miami Dade County) reserve the right to have this product or material tested for quality assurance purposes. If this product or material fails to perform in the accepted manner, the manufacturer will incur the expense of such testing and the AHJ may immediately revoke, modify, or suspend the use of such product or material within their jurisdiction. RER reserves the right to revoke this acceptance, if it is determined by Miami-Dade County Product Control Section that this product or material fails to meet the requirements of the applicable building code.

This product is approved as described herein, and has been designed to comply with the Florida Building Code, including the High Velocity Hurricane Zone.

DESCRIPTION: Model SCH601PD Aluminum Penthouse Louver System

APPROVAL DOCUMENT: Drawing No.**SCH601PD**, titled "SCH601PD, Isometric Views, Plan View, Details, Optional Hood and Curb, Elevation and Itemized Parts Listing", sheets 1 through 11 of 11, dated 04/03/2008, with sheets 3 and 4 of 11 revised on 04/23/2013, prepared by Rice Engineering, signed and sealed by L. David Rice, P.E., bearing the Miami-Dade County Product Control revision stamp with the Notice of Acceptance number and expiration date by the Miami-Dade County Product Control Section.

MISSILE IMPACT RATING: Large and Small Missile Impact Resistant

LABELING: Each unit shall bear a permanent label with the manufacturer's name or logo, city, state, model/series, and following statement: "Miami-Dade County Product Control Approved", unless otherwise noted herein.

RENEWAL of this NOA shall be considered after a renewal application has been filed and there has been no change in the applicable building code negatively affecting the performance of this product.

TERMINATION of this NOA will occur after the expiration date or if there has been a revision or change in the materials, use, and/or manufacture of the product or process. Misuse of this NOA as an endorsement of any product, for sales, advertising or any other purposes shall automatically terminate this NOA. Failure to comply with any section of this NOA shall be cause for termination and removal of NOA.

ADVERTISEMENT: The NOA number preceded by the words Miami-Dade County, Florida, and followed by the expiration date may be displayed in advertising literature. If any portion of the NOA is displayed, then it shall be done in its entirety.

INSPECTION: A copy of this entire NOA shall be provided to the user by the manufacturer or its distributors and shall be available for inspection at the job site at the request of the Building Official.

This NOA **revises NOA # 13-0510.07** and consists of this page 1 and evidence page E-1, as well as approval document mentioned above.

The submitted documentation was reviewed by **Carlos M. Utrera, P.E.**

MIAMI-DADE COUNTY APPROVED

05/26/2016

NOTICE OF ACCEPTANCE: EVIDENCE SUBMITTED

A. DRAWINGS *"Submitted under NOA # 08-0501.01"*

1. Drawing No. **SCH601PD**, titled "SCH601PD, Isometric Views, Plan View, Details, Optional Hood and Curb, Elevation and Itemized Parts Listing", sheets 1 through 11 of 11, dated 04/03/2008, with sheets 3 and 4 of 11 revised on 04/23/2013, prepared by Rice Engineering, signed and sealed by L. David Rice, P.E.

B. TESTS *"Submitted under NOA # 08-0501.01"*

1. Test reports on 1) Uniform Static Air Pressure Test, Loading per FBC TAS 202-94
   2) Large Missile Impact Test per FBC, TAS 201-94
   3) Cyclic Wind Pressure Loading per FBC, TAS 203-94
   4) Tensile testing per ASTM E8-03
   5) Indentation hardness per ASTM B647-84(2006)

   along with marked-up drawings and installation diagram of Series/Model EHH-601PD / ESD-635PD combination, severe duty louvered enclosure, prepared by Architectural Testing, Inc., Test Report No. **77229.01-602-18**, dated 03/20/2008, signed and sealed by Joseph A. Reed, P.E.

C. CALCULATIONS *"Submitted under NOA # 13-0510.07"*

1. Louver calculations prepared by Rice Engineering, dated 05/01/2013, signed and sealed by L. David Rice, P.E.

"Submitted under NOA # 08-0501.01"

2. Structural calculations prepared by Rice Engineering, dated 04/09/2008, signed and sealed by L. David Rice, P.E.

D. QUALITY ASSURANCE

1. Miami-Dade Department of Regulatory and Economic Resources (RER)

E. MATERIAL CERTIFICATIONS

1. None.

F. STATEMENTS

1. Statement letter of code conformance to the 5th edition (2014) FBC issued by Rice Engineering, dated 01/11/2016, signed and sealed by L. David Rice, P.E.

"Submitted under NOA # 13-0510.07"

2. Statement letter of code conformance to 2010 FBC issued by Rice Engineering, dated 05/01/2013, signed and sealed by L. David Rice, P.E.
3. Statement letter of no financial interest issued by Rice Engineering, dated 05/01/2013, signed and sealed by L. David Rice, P.E.

05/26/2016

Carlos M. Utrera, P.E.
Product Control Examiner
NOA No 16-0201.13
Expiration Date: June 19, 2018
Approval Date: June 2, 2016

EXAMPLE OF PENTHOUSE
WITHOUT OPTIONAL HOOD

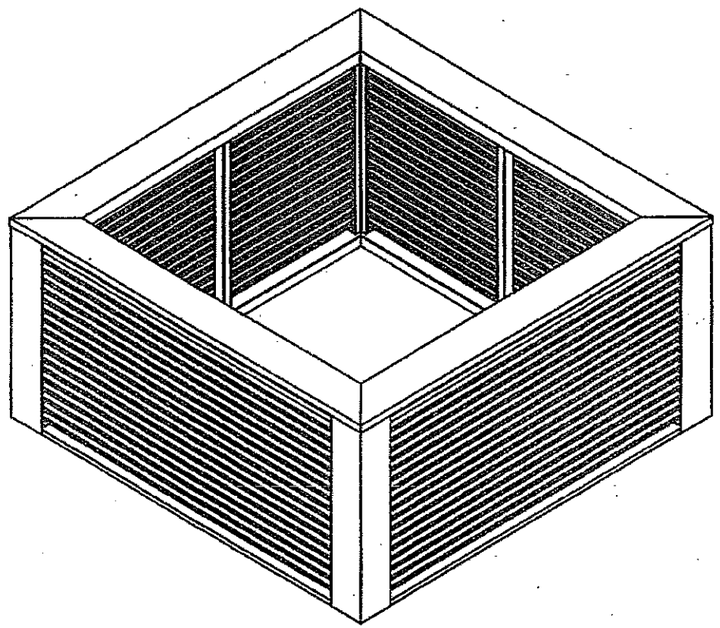

STANDARD/OVERALL/MAX
DIMENSIONS & SECTIONS ARE
SAME FOR PENTHOUSES WITH
AND WITHOUT OPTIONAL HOOD.

LOUVER HEIGHTS AVAILABLE UP TO 84"

EXAMPLE OF PENTHOUSE
WITH OPTIONAL HOOD

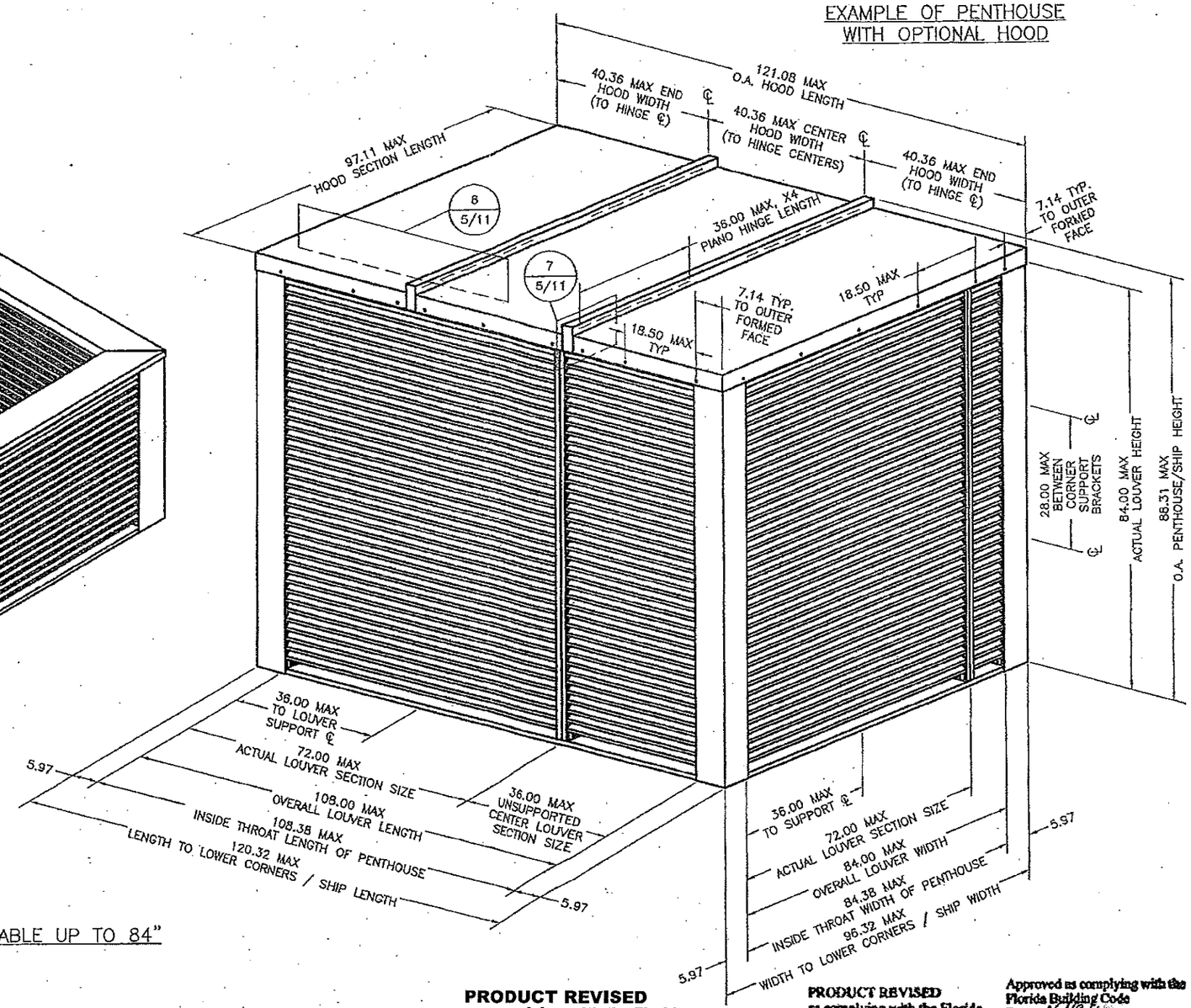

PRODUCT REVISED
as complying with the Florida Building Code
NOA-No. 16-0201.13
Expiration Date 06/19/2018
By
Miami-Dade Product Control

PRODUCT REVISED
as complying with the Florida Building Code
Acceptance No 13-0510.07
Expiration Date 06/19/2018
By
Miami Dade Product Control

Approved as complying with the Florida Building Code
Date 06/19/16
NOA# 08-0501.01
Miami Dade Product Control Division
By

DRAWN BY M STEELE
DATE 4/3/08
SCALE 1:24
SHEET NO. 1 OF 11
CAD DRAWING NO. SCH601PD

AIROLITE
The look that works.™
SCHOFIELD, WISCONSIN 54476
715-359-6171

TITLE
SCH601PD
ISOMETRIC VIEWS

L. DAVID RICE
APR 16 2008

RICE ENGINEERING
105 School Creek Trail
Luxemburg, WI 54217
Phone: 920.845.1042
Fax: 920.845.1048
www.rice-inc.com

Florida Firm No: F-01000005061
Certificate of Authorization: #9090
L. David Rice
Registration No: 50923

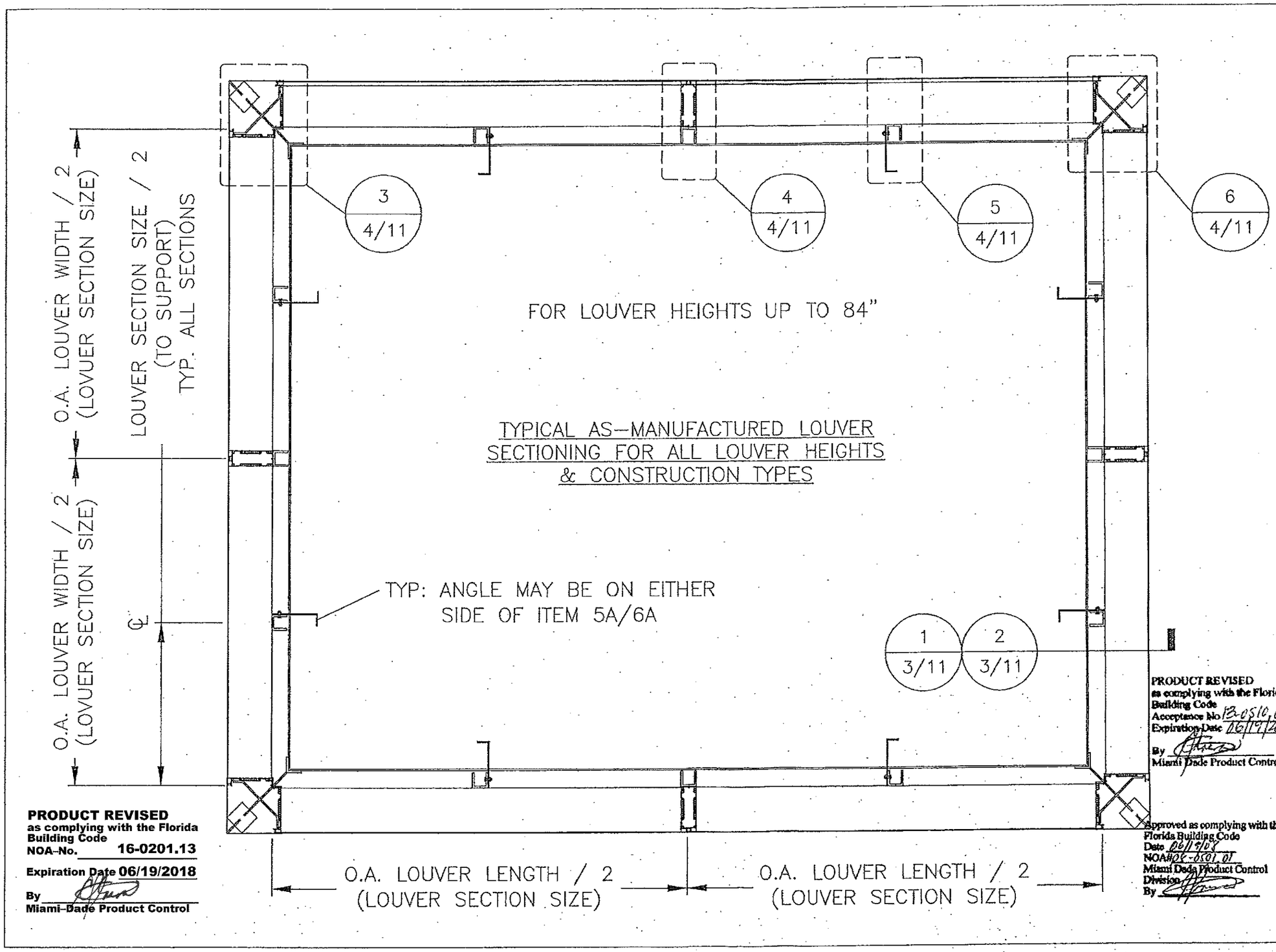

PRODUCT REVISED
as complying with the Florida Building Code
NOA-No. 16-0201.13
Expiration Date 06/19/2018
By
Miami-Dade Product Control

PRODUCT REVISED
as complying with the Florida Building Code
Acceptance No 13-0510.07
Expiration Date 06/19/2018
By
Miami Dade Product Control

Approved as complying with the Florida Building Code
Date 06/19/08
NOA# 08-0501.01
Miami Dade Product Control Division
By

DRAWN BY	M STEELE
DATE	4/3/08
SCALE	1:12
SHEET NO.	2 OF 11
CAD DRAWING NO.	SCH601PD

AIROLITE
The look that works™
SCHOFIELD, WISCONSIN 54476
715-359-6171

SCH601PD

TITLE: PLAN VIEW - X-SECTIONAL

L. DAVID RICE

APR 16 2008

RICE ENGINEERING
105 School Creek Trail
Luxemburg, Wi 54217
Phone: 920.845.1042
Fax: 920.845.1048
www.rice-inc.com

Florida Firm No: F-01000005061
Certificate of Authorization: #9090
L. David Rice
Registration No: 50923

ALTERNATE WELD LOCATION

MES	04/23 2013	1

1A / 3/11 DEEP HEAD DETAIL

SCALE: 1:3

CONFIGURATION TABLE	
LOUVER HEIGHT	HEAD CAP
<=81	8
<=84	25

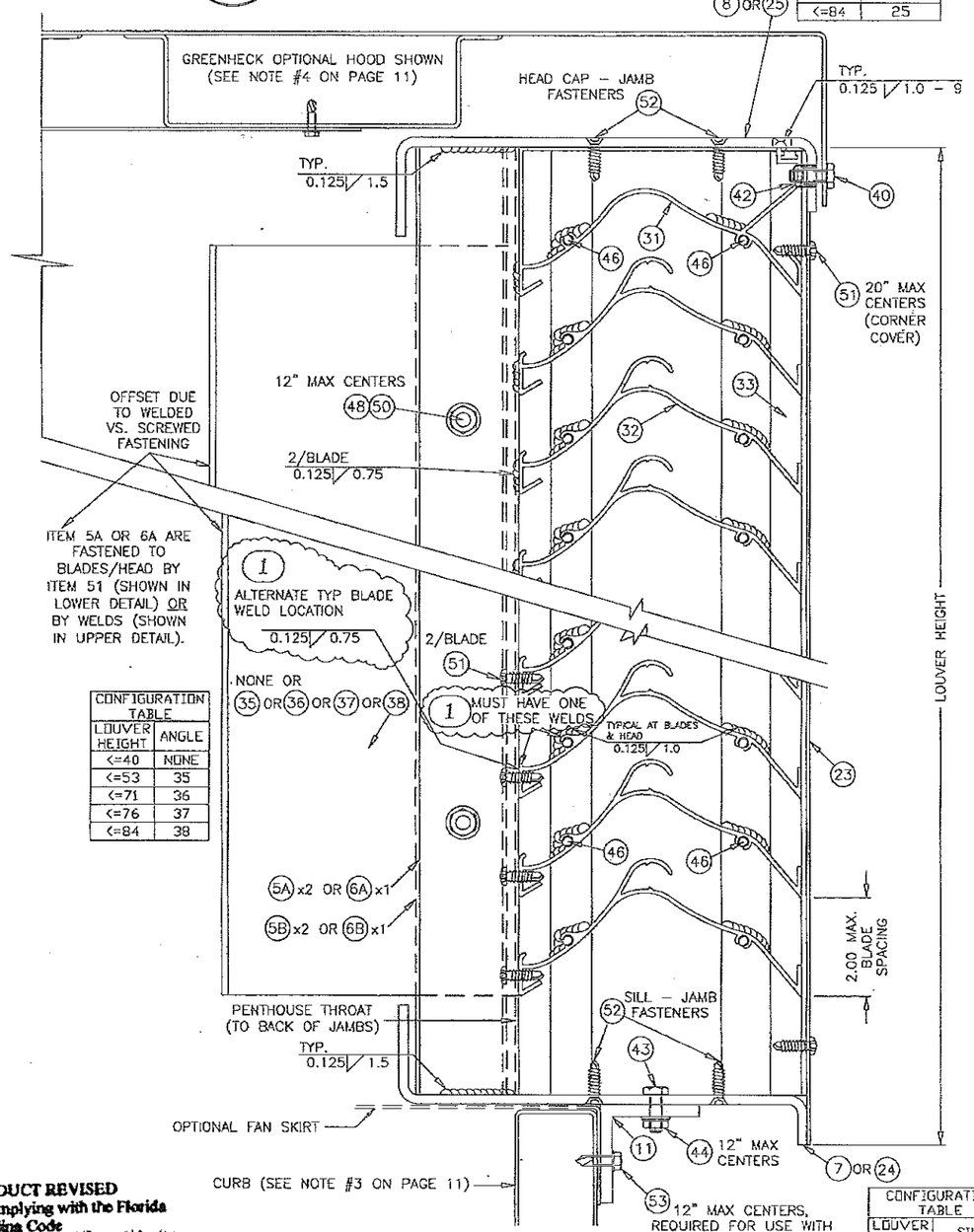

CONFIGURATION TABLE	
LOUVER HEIGHT	ANGLE
<=40	NONE
<=53	35
<=71	36
<=76	37
<=84	38

CONFIGURATION TABLE	
LOUVER HEIGHT	SILL
<=67	7
<=84	24

2A / 3/11 DEEP SILL DETAIL

SCALE: 1:3

1B / 3/11 SHALLOW HEAD DETAIL

SCALE: 1:3

CONFIGURATION TABLE	
LOUVER HEIGHT	HEAD CAP
<=52	2
<=68	4

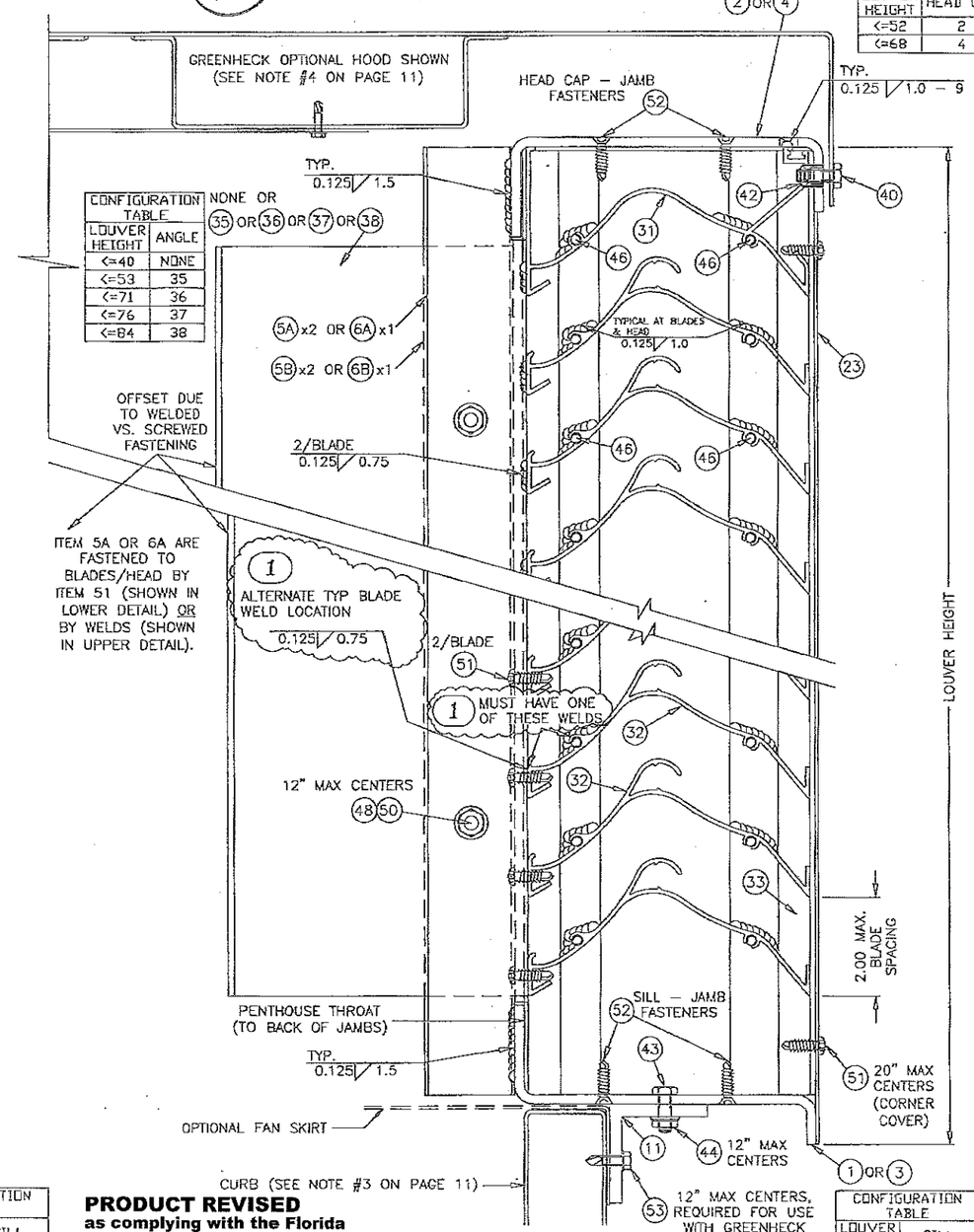

CONFIGURATION TABLE	
LOUVER HEIGHT	ANGLE
<=40	NONE
<=53	35
<=71	36
<=76	37
<=84	38

CONFIGURATION TABLE	
LOUVER HEIGHT	SILL
<=41	1
<=54	3

2B / 3/11 SHALLOW SILL DETAIL

SCALE: 1:3

PRODUCT REVISED
as complying with the Florida Building Code
Acceptance No 13-0510.07
Expiration Date 06/19/2018
By
Miami-Dade Product Control

PRODUCT REVISED
as complying with the Florida Building Code
NOA-No. 16-0201.13
Expiration Date 06/19/2018
By
Miami-Dade Product Control

DATE	4/3/08
DRAWN BY	M STEELE
SCALE	1:3
SHEET NO.	3 OF 11
CAD DRAWING NO.	SCH601PD
TITLE	DETAILS – HEADS & SILLS

AIROLITE
The look that works™
SCHOFIELD, WISCONSIN 54476
715-359-6171

SCH601PD

L. DAVID RICE
LICENSE
No. 50923
STATE OF FLORIDA
PROFESSIONAL ENGINEER

MAY 01 2013

RICE ENGINEERING
105 School Creek Trail
Luxemburg, WI 54217
Phone: 920.845.1042
Fax: 920.845.1048
www.rice-inc.com

Florida Firm No: F-01000005061
Certificate of Authorization: #9090
L. David Rice
Registration No: 50923

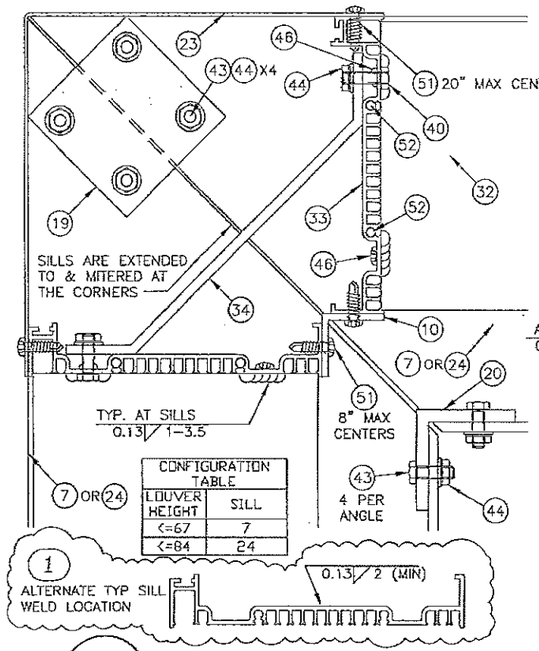

CONFIGURATION TABLE	
LOUVER HEIGHT	SILL
<=67	7
<=84	24

3A 4/11 DEEP SILL CORNER DETAIL
SCALE: 1:3

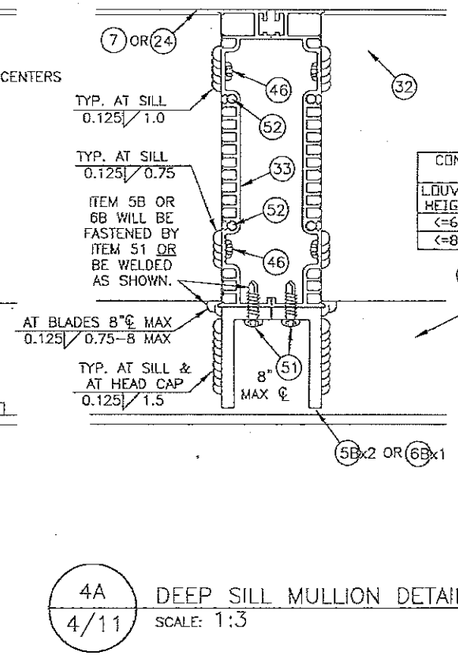

CONFIGURATION TABLE	
LOUVER HEIGHT	SILL
<=67	7
<=84	24

4A 4/11 DEEP SILL MULLION DETAIL
SCALE: 1:3

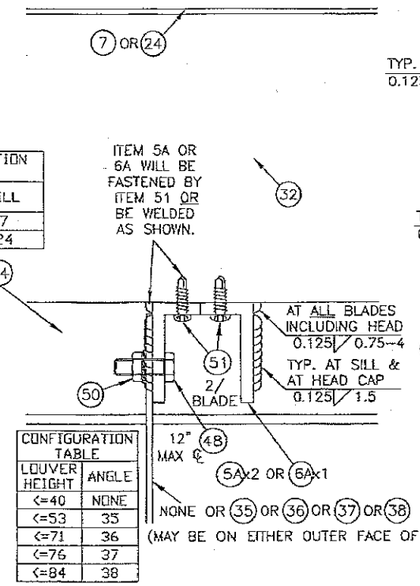

CONFIGURATION TABLE	
LOUVER HEIGHT	ANGLE
<=40	NONE
<=53	35
<=71	36
<=76	37
<=84	38

5A 4/11 DEEP SILL SUPPORT DETAIL
SCALE: 1:3

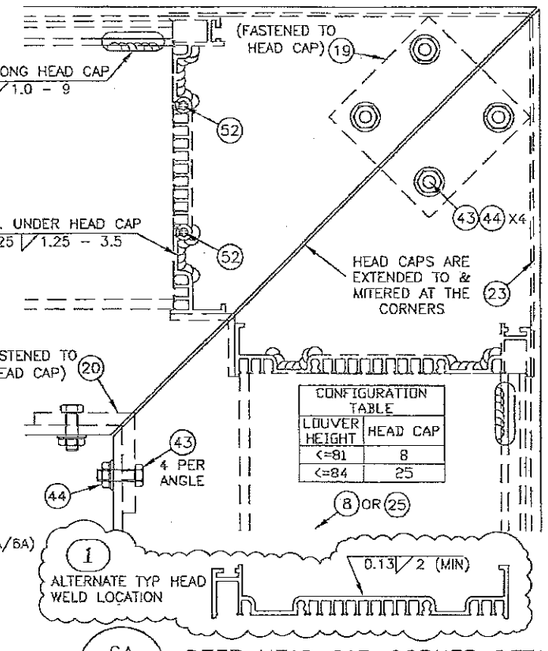

CONFIGURATION TABLE	
LOUVER HEIGHT	HEAD CAP
<=81	8
<=84	25

6A 4/11 DEEP HEAD CAP CORNER DETAIL
SCALE: 1:3

PRODUCT REVISED
as complying with the Florida Building Code
NOA-No. 16-0201.13
Expiration Date 06/19/2018
By
Miami-Dade Product Control

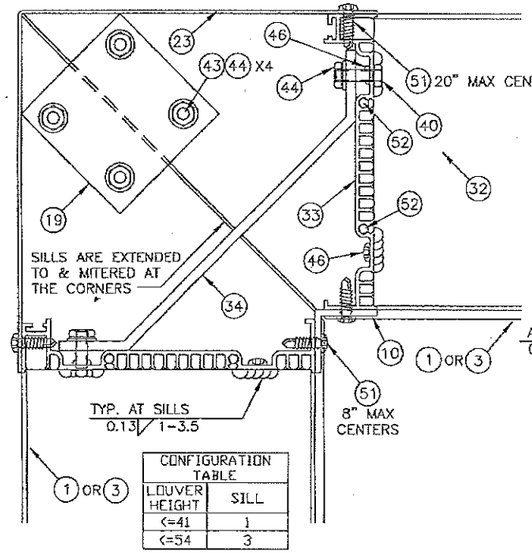

CONFIGURATION TABLE	
LOUVER HEIGHT	SILL
<=41	1
<=54	3

3B 4/11 SHALLOW SILL CORNER DETAIL
SCALE: 1:3

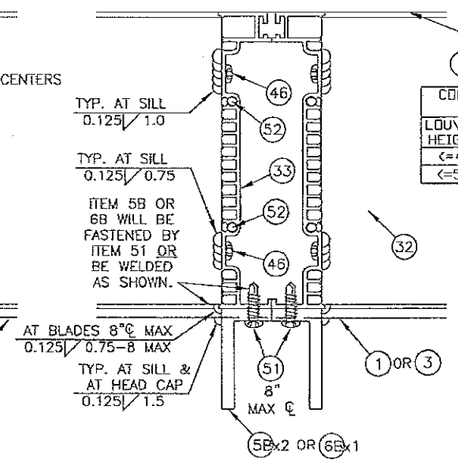

CONFIGURATION TABLE	
LOUVER HEIGHT	SILL
<=41	1
<=54	3

4B 4/11 SHALLOW SILL MULLION DETAIL
SCALE: 1:3

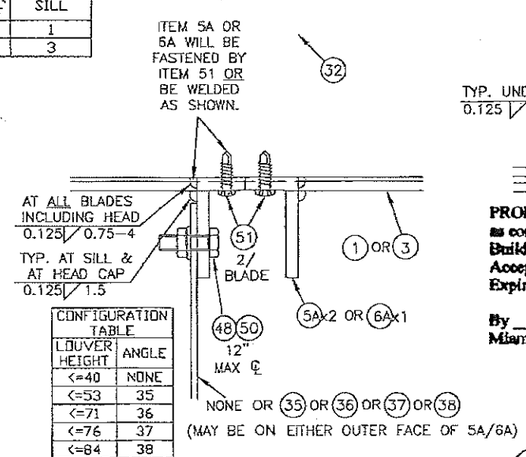

CONFIGURATION TABLE	
LOUVER HEIGHT	ANGLE
<=40	NONE
<=53	35
<=71	36
<=76	37
<=84	38

5B 4/11 SHALLOW SILL SUPPORT DETAIL
SCALE: 1:3

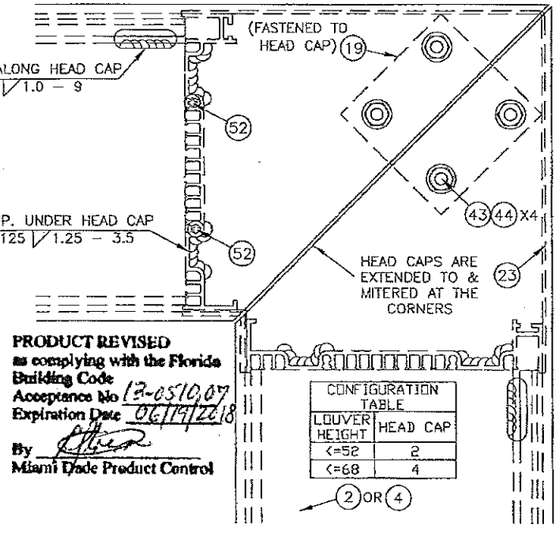

CONFIGURATION TABLE	
LOUVER HEIGHT	HEAD CAP
<=52	2
<=68	4

PRODUCT REVISED
as complying with the Florida Building Code
Acceptance No 13-0510.07
Expiration Date 06/19/2018
By
Miami Dade Product Control

6B 4/11 SHALLOW SILL HEAD CAP CORNER DETAIL
SCALE: 1:3

ALTERNATE WELD LOCATION | MES | 04/23 2013 | 1

DRAWN BY M STEELE | DATE 4/3/08
SCALE 1:3 | SHEET NO. 4 OF 11
CAD DRAWING NO. SCH601PD

AIROLITE
The look that works™
SCHOFIELD, WISCONSIN 54476
715-359-6171

SCH601PD

TITLE DETAILS - MULLIONS, SUPPORTS, & CORNERS

L. DAVID RICE LICENSE No. 50923 STATE OF FLORIDA PROFESSIONAL ENGINEER

MAY 01 2013

RICE ENGINEERING
105 School Creek Trail
Luxemburg, WI 54217
Phone: 920.845.1042
Fax: 920.845.1048
www.rice-inc.com

Florida Firm No: F-01000005061
Certificate of Authorization: #9090
L. David Rice
Registration No: 50923

7 / 5/11 HOOD LENGTH X-SECTION
SCALE: 1:7

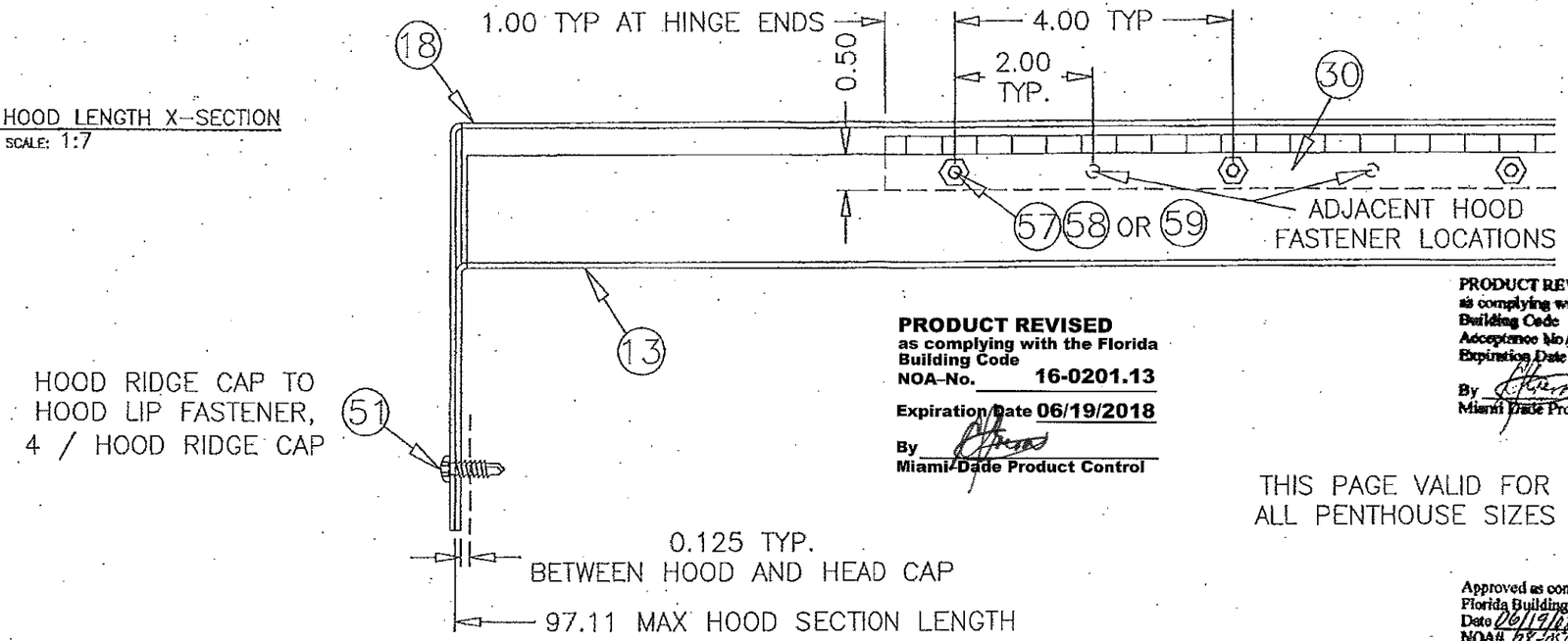

PRODUCT REVISED
as complying with the Florida Building Code
NOA-No. 16-0201.13
Expiration Date 06/19/2018
By
Miami-Dade Product Control

PRODUCT REVISED
as complying with the Florida Building Code
Acceptance No 13-0510.07
Expiration Date 06/19/2018
By
Miami Dade Product Control

THIS PAGE VALID FOR ALL PENTHOUSE SIZES

Approved as complying with the Florida Building Code
Date 06/19/08
NOA# 08-0501.01
Miami Dade Product Control Division
By

8 / 5/11 HOOD WIDTH X-SECTION
SCALE: 1:14

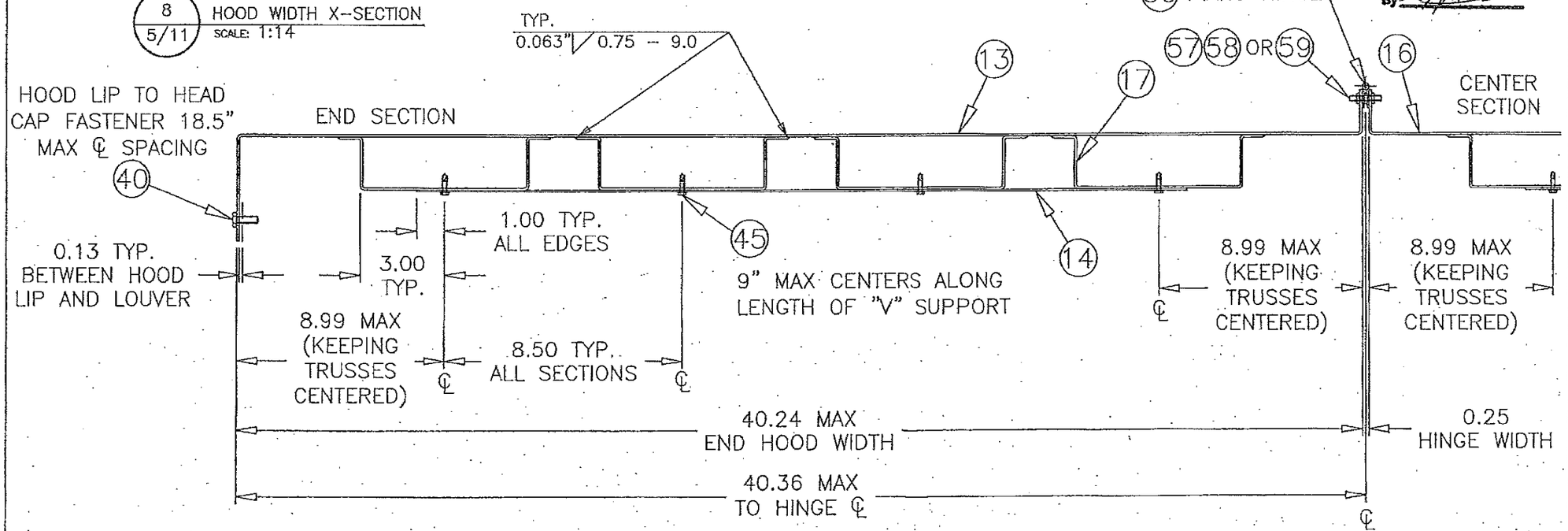

DRAWN BY	M STEELE
DATE	4/3/08
SCALE	VARIES
SHEET NO.	5 OF 11
CAD DRAWING NO.	SCH601PD

AIROLITE
The look that works™
SCHOFIELD, WISCONSIN 54476
715-359-6171

TITLE: OPTIONAL HOOD DETAILS – HOOD

L. DAVID RICE

APR 1 6 2008

RICE ENGINEERING
105 School Creek Trail
Luxemburg, WI 54217
Phone: 920.845.1042
Fax: 920.845.1048
www.rice-inc.com

Florida Firm No: F-01000005061
Certificate of Authorization: #9090
L. David Rice
Registration No: 50923

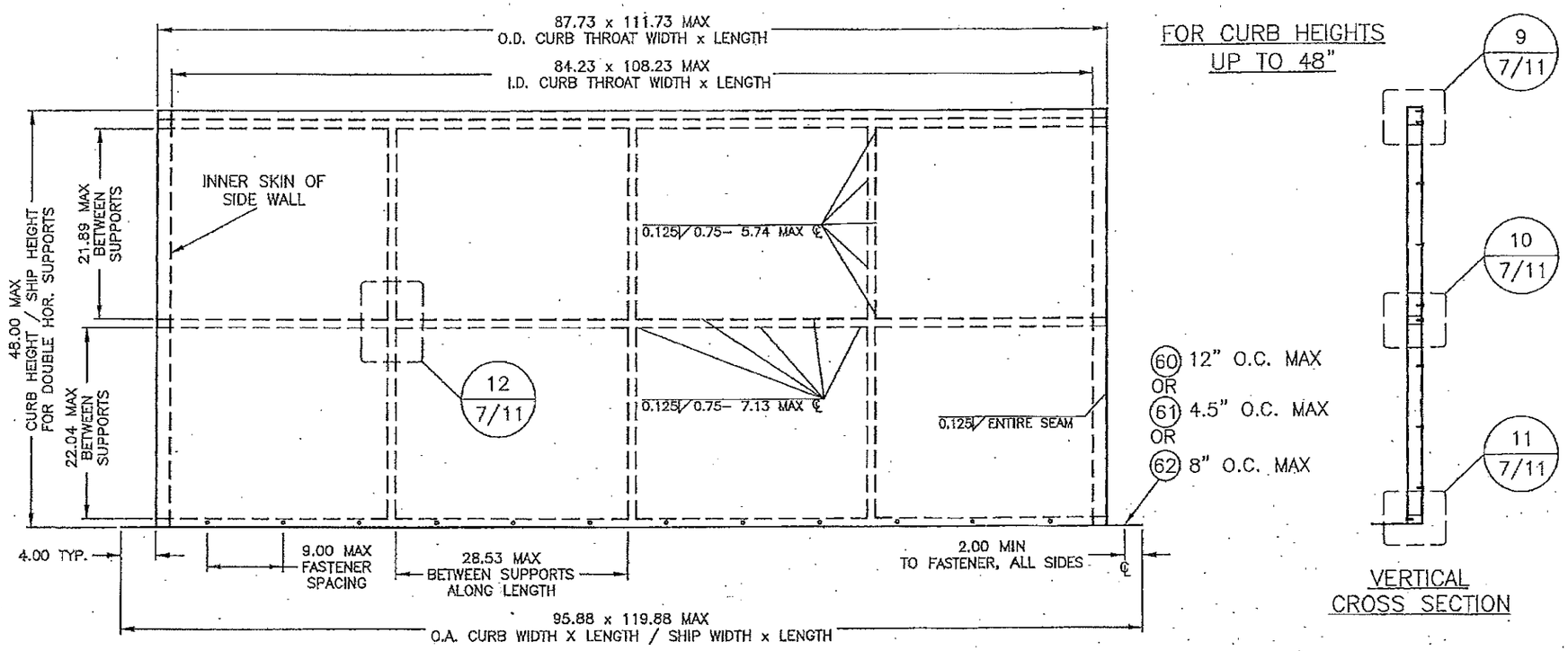

FOR CURB HEIGHTS UP TO 48"

VERTICAL CROSS SECTION

PRODUCT REVISED
as complying with the Florida Building Code
NOA-No. 16-0201.13
Expiration Date 06/19/2018
By
Miami-Dade Product Control

PRODUCT REVISED
as complying with the Florida Building Code
Acceptance No 13-0510.07
Expiration Date 06/19/2018
By
Miami Dade Product Control

Approved as complying with the Florida Building Code
Date 06/19/08
NOA# 01-0601.01
Miami Dade Product Control Division
By

DRAWN BY M STEELE
DATE 4/3/08
SCALE 1:12
SHEET NO. 6 OF 11
CAD DRAWING NO. SCH601PD

AIROLITE
The look that works™
SCHOFIELD, WISCONSIN 54476
715-359-6171

TITLE OPTIONAL CURB
ELEVATION – LENGTH & WIDTH

L. DAVID RICE
APR 16 2008

RICE ENGINEERING
105 School Creek Trail
Luxemburg, WI 54217
Phone: 920.845.1042
Fax: 920.845.1048
www.rice-inc.com

Florida Firm No: F-01000005061
Certificate of Authorization: #9090
L. David Rice
Registration No: 50923

9 / 7/11 CURB DETAILS TOP
SCALE: 1:2

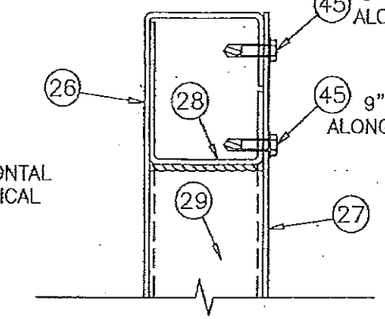

HOR. = HORIZONTAL
VERT. = VERTICAL

10 / 7/11 CURB DETAILS MIDDLE
SCALE: 1:2

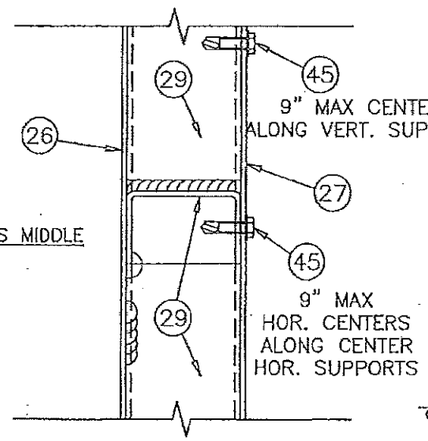

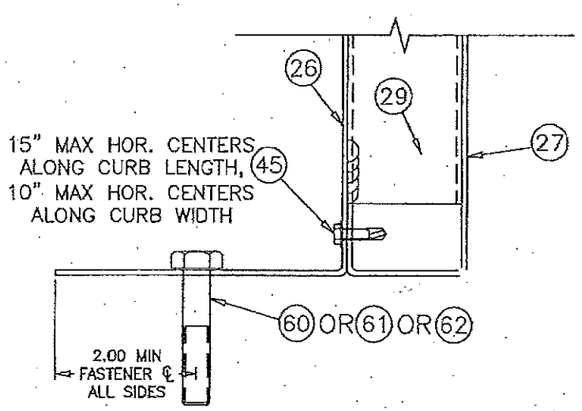

11 / 7/11 CURB DETAILS BOTTOM
SCALE: 1:2

FOR CURB HEIGHTS UP TO 48"

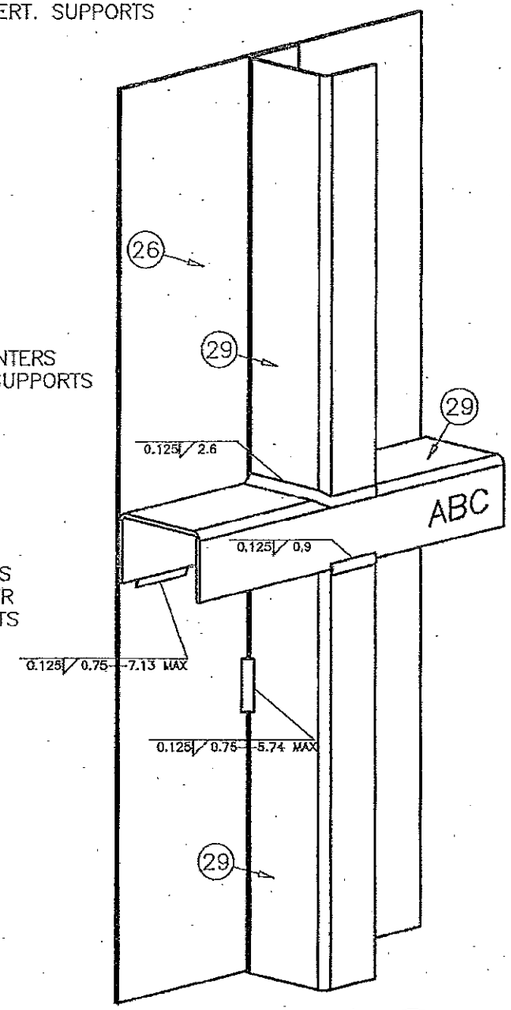

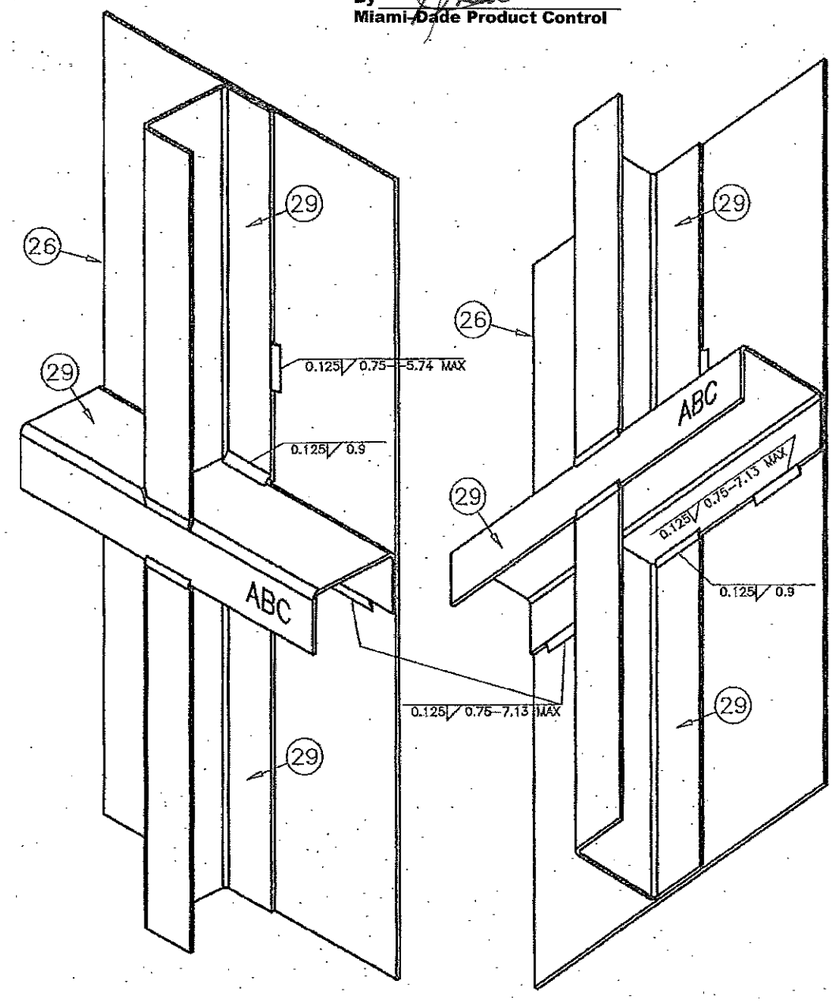

12 / 7/11 TYP. CURB WELD DETAILS
SCALE: 1:2

VIEW FROM INTERIOR,
INNER CURB SKIN REMOVED

PRODUCT REVISED
as complying with the Florida Building Code
NOA-No. 16-0201.13
Expiration Date 06/19/2018
By
Miami-Dade Product Control

PRODUCT REVISED
as complying with the Florida Building Code
Acceptance No 13-0516.07
Expiration Date 06/19/2018
By
Miami Dade Product Control

Approved as complying with the Florida Building Code
Date 06/19/08
NOA# 08-0201.01
Miami Dade Product Control Division
By

DRAWN BY M STEELE	DATE 4/3/08
SCALE 1:2	
SHEET NO. 7 OF 11	
CAD DRAWING NO. SCH601PD	

AIROLITE
The look that works™
SCHOFIELD, WISCONSIN 54476
715-359-6171

TITLE
OPTIONAL CURB
DETAILS – CURB

L. DAVID RICE
APR 16 2008

RICE ENGINEERING
105 School Creek Trail
Luxemburg, WI 54217
Phone: 920.845.1042
Fax: 920.845.1048
www.rice-inc.com

Florida Firm No: F-01000005061
Certificate of Authorization: #9090
L. David Rice
Registration No: 50923

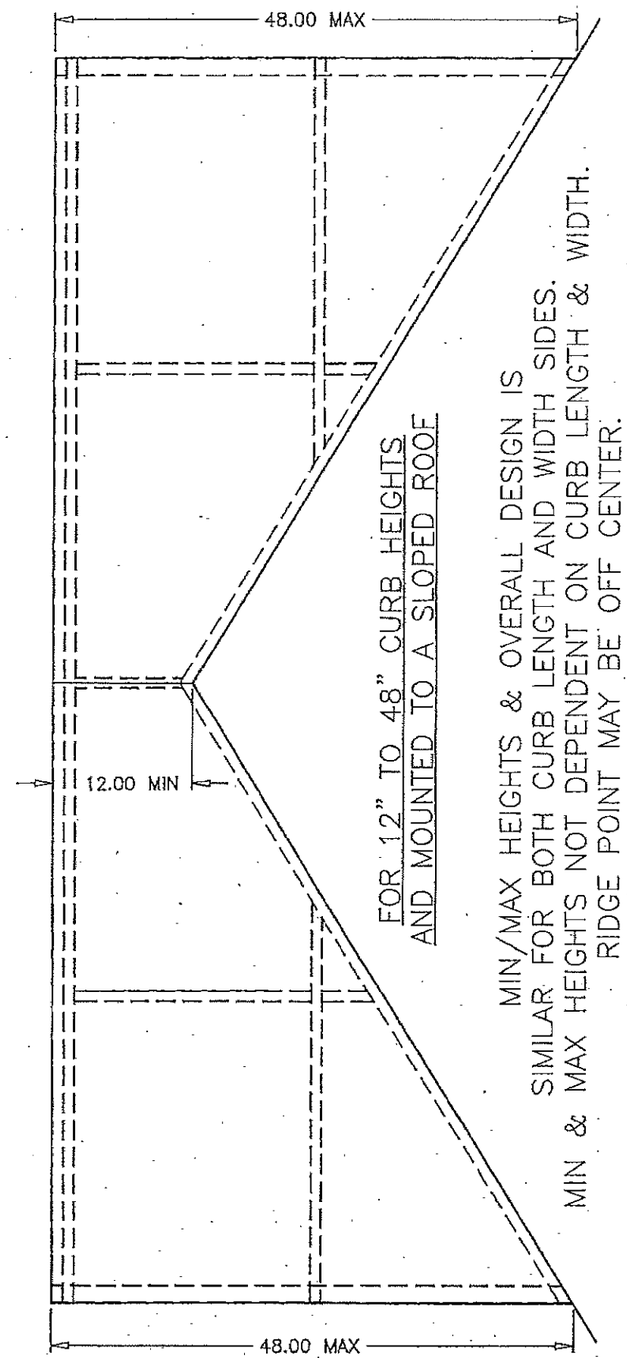

FOR 12" TO 48" CURB HEIGHTS
AND MOUNTED TO A SLOPED ROOF

MIN/MAX HEIGHTS & OVERALL DESIGN IS
SIMILAR FOR BOTH CURB LENGTH AND WIDTH SIDES.
MIN & MAX HEIGHTS NOT DEPENDENT ON CURB LENGTH & WIDTH.
RIDGE POINT MAY BE OFF CENTER.

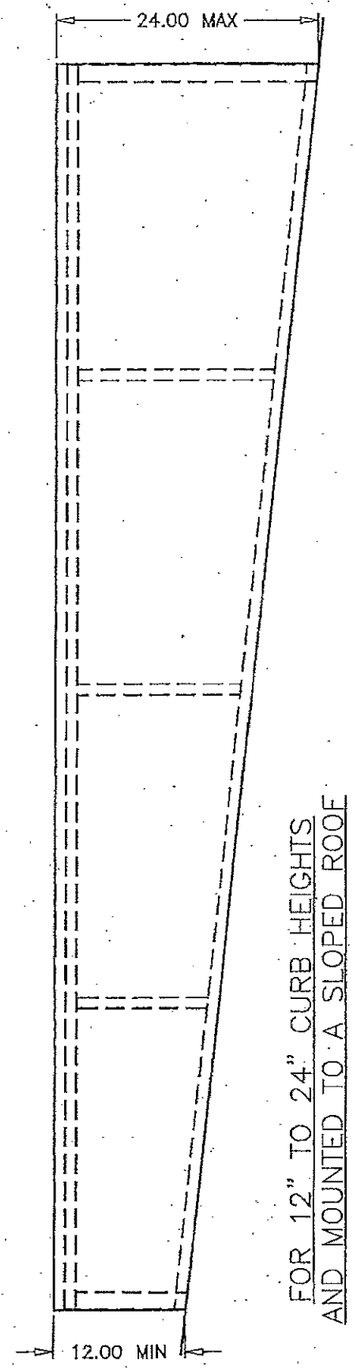

FOR 12" TO 24" CURB HEIGHTS
AND MOUNTED TO A SLOPED ROOF

MIN/MAX HEIGHTS & OVERALL DESIGN IS
SIMILAR FOR BOTH CURB LENGTH AND WIDTH SIDES.
MIN & MAX HEIGHTS NOT DEPENDENT ON CURB LENGTH & WIDTH.

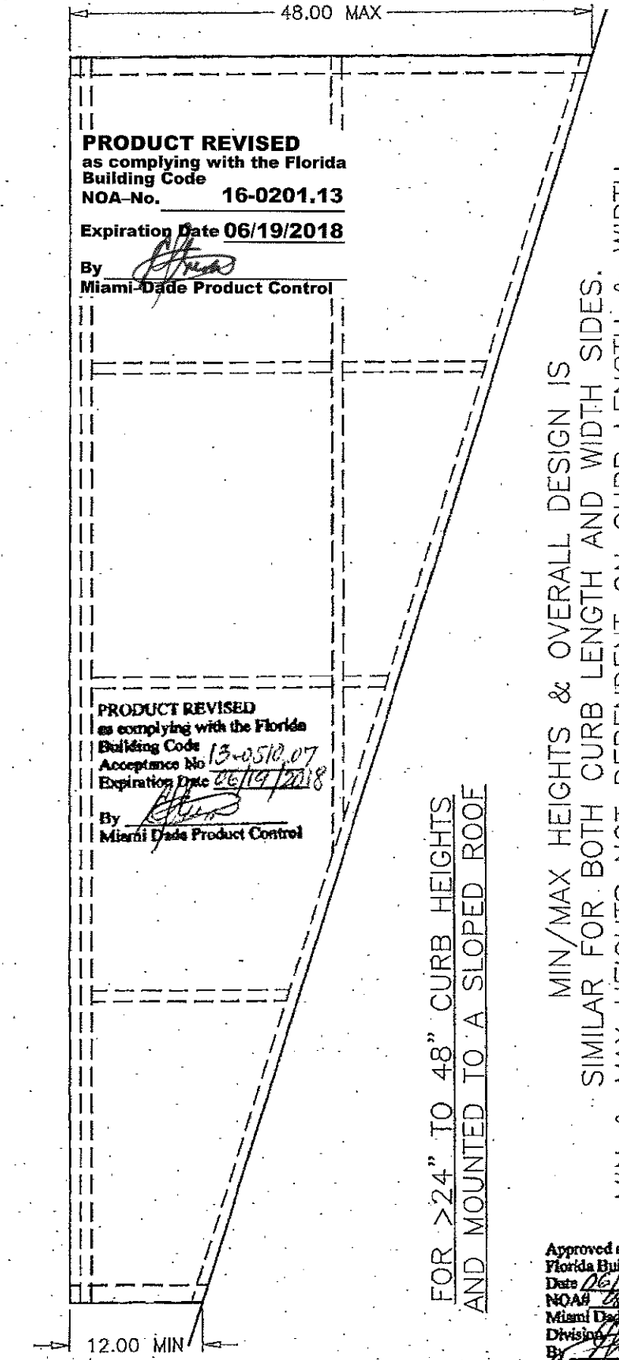

PRODUCT REVISED
as complying with the Florida Building Code
NOA-No. 16-0201.13
Expiration Date 06/19/2018
By
Miami-Dade Product Control

PRODUCT REVISED
as complying with the Florida Building Code
Acceptance No 13-0510.07
Expiration Date 06/19/2018
By
Miami Dade Product Control

FOR >24" TO 48" CURB HEIGHTS
AND MOUNTED TO A SLOPED ROOF

MIN/MAX HEIGHTS & OVERALL DESIGN IS
SIMILAR FOR BOTH CURB LENGTH AND WIDTH SIDES.
MIN & MAX HEIGHTS NOT DEPENDENT ON CURB LENGTH & WIDTH.

Approved as complying with the Florida Building Code
Date 06/19/08
NOA# 08-0201.01
Miami Dade Product Control Division
By

DRAWN BY M STEELE	DATE 4/3/08
SCALE 1:13	
SHEET NO. 8 OF 11	
CAD DRAWING NO. SCH601PD	

AIRCOLITE
The look that works™
SCHOFIELD, WISCONSIN 54476
715-359-6171

TITLE
OPTIONAL CURB
ELEVATION – SLOPED ROOFS

L. DAVID RICE
APR 16 2008

RICE ENGINEERING
105 School Creek Trail
Luxemburg, WI 54217
Phone: 920.845.1042
Fax: 920.845.1048
www.rice-inc.com

Florida Firm No: F-01000005061
Certificate of Authorization: #9090
L. David Rice
Registration No: 50923

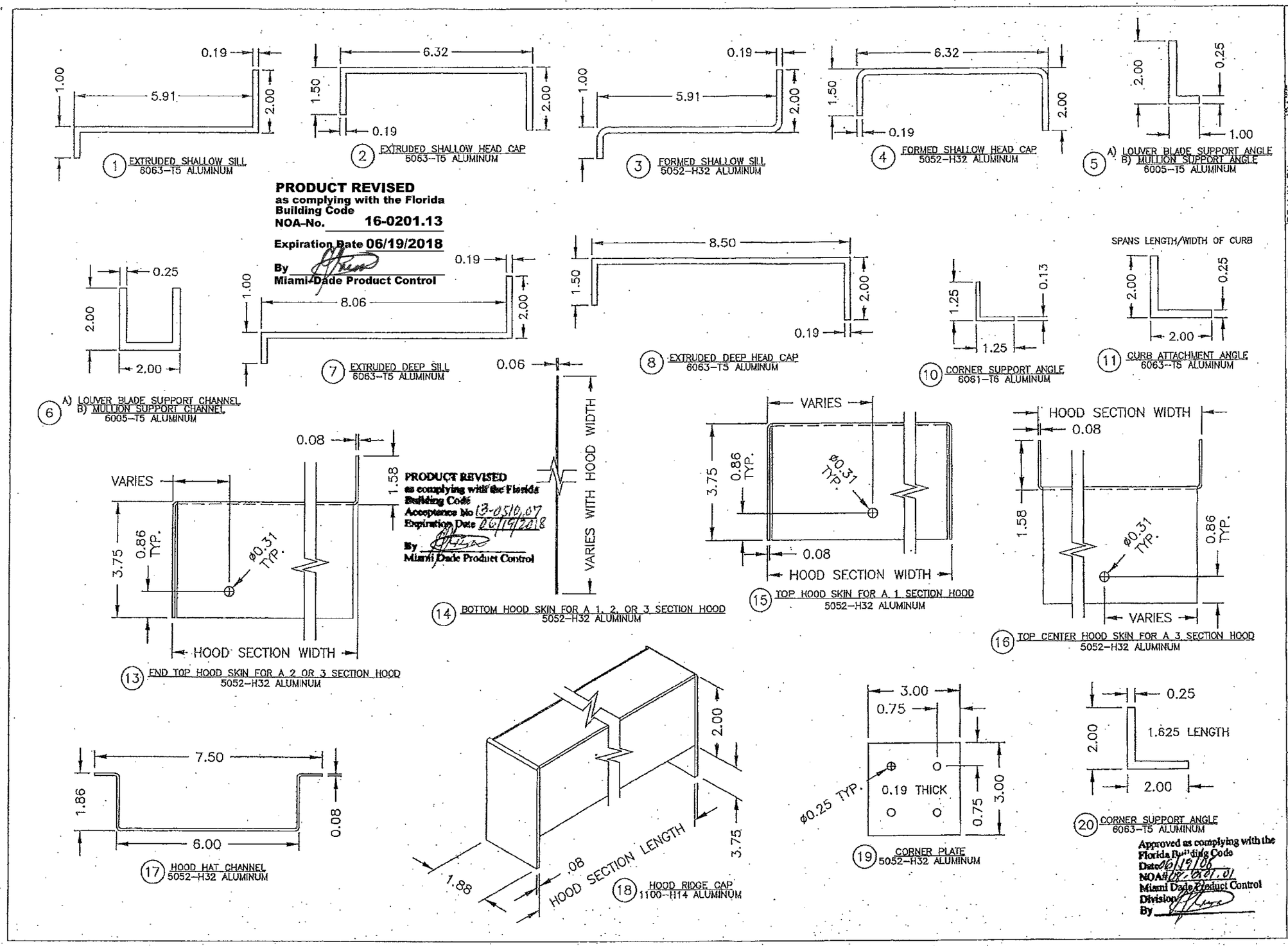

PRODUCT REVISED
as complying with the Florida Building Code
NOA-No. 16-0201.13
Expiration Date 06/19/2018
By
Miami-Dade Product Control

PRODUCT REVISED
as complying with the Florida Building Code
Acceptance No 13-0510.07
Expiration Date 06/19/2018
By
Miami Dade Product Control

Approved as complying with the Florida Building Code
Date 06/19/08
NOA# 08.0601.01
Miami Dade Product Control Division
By

DRAWN BY	M STEELE
DATE	4/3/08
SCALE	1:3
SHEET NO.	9 OF 11
CAD DRAWING NO.	SCH601PD

AIROLITE
The look that works™
SCHOFIELD, WISCONSIN 54476
715-359-6171

TITLE SCH601PD, OPTIONAL CURB, & OPTIONAL HOOD

DETAILS – PARTS

L. DAVID RICE

APR 16 2008

RICE ENGINEERING
105 School Creek Trail
Luxemburg, WI 54217
Phone: 920.845.1042
Fax: 920.845.1048
www.rice-inc.com

Florida Firm No: F-01000005061
Certificate of Authorization: #9090
L. David Rice
Registration No: 50923

PRODUCT REVISED
as complying with the Florida Building Code
NOA-No. 16-0201.13
Expiration Date 06/19/2018
By
Miami-Dade Product Control

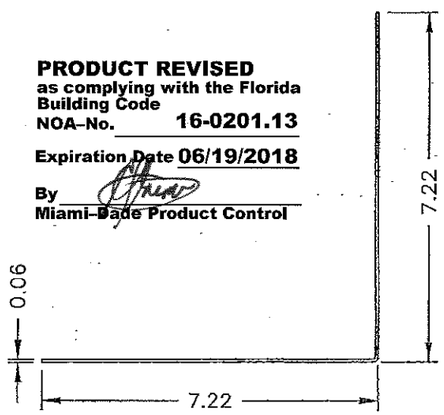

(23) OUTSIDE CORNER COVER
1100-H14 ALUMINUM

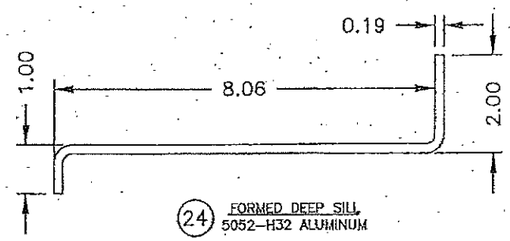

(24) FORMED DEEP SILL
5052-H32 ALUMINUM

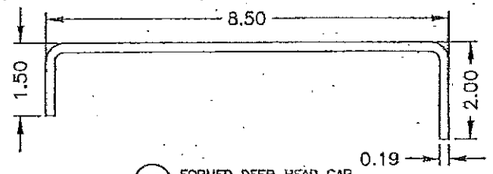

(25) FORMED DEEP HEAD CAP
5052-H32 ALUMINUM

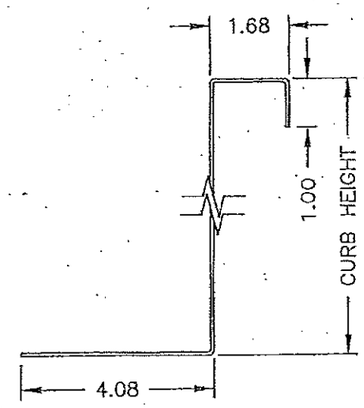

(26) OUTER CURB SKIN
PLATED/PAINTED STEEL 14 GA.

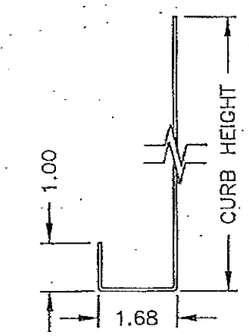

(27) INNER CURB SKIN
PLATED/PAINTED STEEL 14 GA.

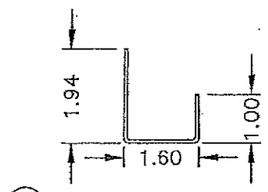

(28) TOP EDGE INTERIOR CURB SUPPORT
PLATED/PAINTED STEEL 14 GA.

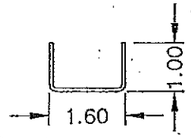

(29) INTERIOR CURB SUPPORT
PLATED/PAINTED STEEL 14 GA.

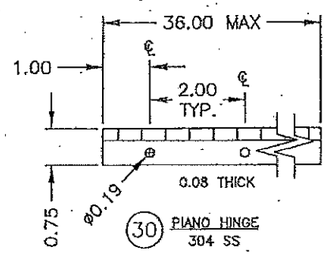

(30) PIANO HINGE
304 SS

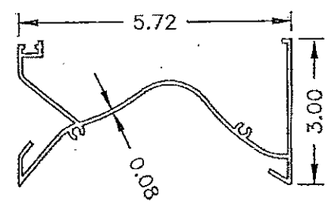

(31) LOUVER HEAD
6063-T5 ALUMINUM

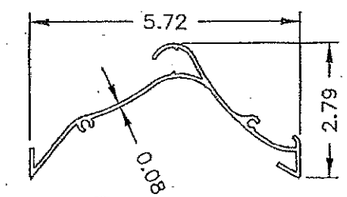

(32) LOUVER BLADE
6063-T5 ALUMINUM

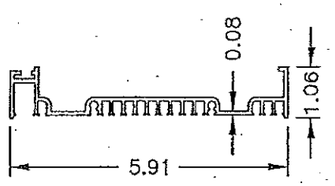

(33) LOUVER JAMB
6063-T5 ALUMINUM

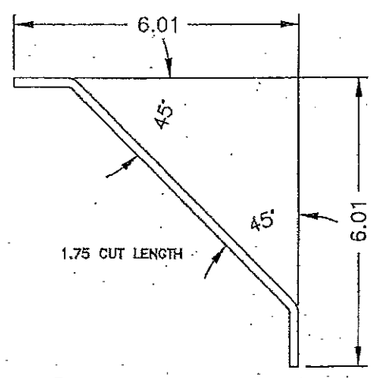

(34) CORNER SUPPORT BRACKET
3003-H14 ALUMINUM

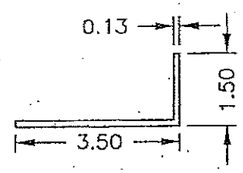

(35) ADDITIONAL BLADE SUPPORT ANGLE
6063-T5 ALUMINUM

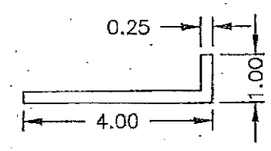

(36) ADDITIONAL BLADE SUPPORT ANGLE
6005-T5 ALUMINUM

PRODUCT REVISED
as complying with the Florida Building Code
Acceptance No 13-0570.07
Expiration Date 06/19/2018
By
Miami Dade Product Control

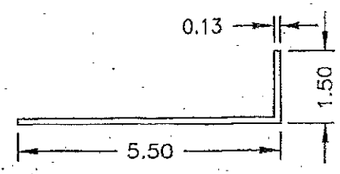

(37) ADDITIONAL BLADE SUPPORT ANGLE
6063-T5 ALUMINUM

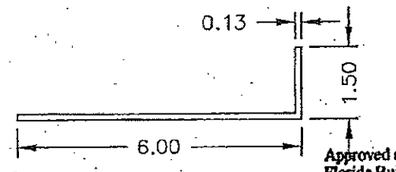

(38) ADDITIONAL BLADE SUPPORT ANGLE
6063-T5 ALUMINUM

Approved as complying with the Florida Building Code
Date 06/19/08
NOA# 08-0503.01
Miami Dade Product Control Division
By

DRAWN BY M STEELE
DATE 4/3/08
SCALE 1:3
SHEET NO. 10 OF 11
CAD DRAWING NO. SCH601PD

AIROLITE
The look that works™
SCHOFIELD, WISCONSIN 54476
715-359-6171

TITLE SCH601PD, OPTIONAL CURB, & OPTIONAL HOOD
DETAILS - PARTS

L. DAVID RICE
APR 16 2008

RICE ENGINEERING
105 School Creek Trail
Luxemburg, WI 54217
Phone: 920.845.1042
Fax: 920.845.1048
www.rice-inc.com

Florida Firm No: F-01000005061
Certificate of Authorization: #9090
L. David Rice
Registration No: 50923

ITEM	DESCRIPTION	MATERIAL	NOTES
1	EXTRUDED SHALLOW SILL	ALUM.	CAN BE REPLACED BY ITEM 24 IF LOUVER HEIGHT IS <=41'
2	EXTRUDED SHALLOW HEAD CAP	ALUM.	CAN BE REPLACED BY ITEM 25 IF LOUVER HEIGHT IS <=52'
3	FORMED SHALLOW SILL	ALUM.	CAN BE REPLACED BY ITEM 24 IF LOUVER HEIGHT IS <=54'
4	FORMED SHALLOW HEAD CAP	ALUM.	CAN BE REPLACED BY ITEM 25 IF LOUVER HEIGHT IS <=68'
5	A) LOUVER BLADE SUPPORT ANGLE	ALUM.	ON >36' LOUVER SECTION WIDTHS ONLY, SPANS ENTIRE JAMB LENGTH
	B) MULLION SUPPORT ANGLE	ALUM.	ON >72' OVERALL LOUVER WIDTHS ONLY, ENDS 2' BEFORE TOP/BOTTOM OF JAMB WHEN EXTRUDED OR FORMED DEEP SILLS/HEAD CAPS ARE USED
6	A) LOUVER BLADE SUPPORT CHANNEL	ALUM.	ON >36' LOUVER SECTION WIDTHS ONLY, MAY BE USED IN SUBSTITUTION OF TWO OF ITEM 5A, SPANS ENTIRE JAMB LENGTH
	B) MULLION SUPPORT CHANNEL	ALUM.	ON >72' OVERALL LOUVER WIDTHS ONLY, MAY BE USED IN SUBSTITUTION OF TWO OF ITEM 5B, ENDS 2' BEFORE TOP/BOTTOM OF JAMB WHEN EXTRUDED OR FORMED DEEP SILLS/HEAD CAPS ARE USED
7	EXTRUDED DEEP SILL	ALUM.	INTERCHANGEABLE WITH ITEM 24 IF LOUVER HEIGHT IS <=67'
8	EXTRUDED DEEP HEAD CAP	ALUM.	INTERCHANGEABLE WITH ITEM 25 IF LOUVER HEIGHT IS <=81'
	9, NO ITEM		
10	CORNER SUPPORT ANGLE	ALUM.	MAY STOP 7.5' BEFORE HEAD OF LOUVER TO ALLOW FOR LIFTING LUG BOLTS
11	CURB ATTACHMENT ANGLE	ALUM.	
	12, NO ITEM		
13	END TOP HOOD SKIN FOR A 2 OR 3 SECTION HOOD	ALUM.	
14	BOTTOM HOOD SKIN FOR A 1, 2, OR 3 SECTION HOOD	ALUM.	USED ONLY IF MORE THAN ONE ITEM 17 IS USED PER HOOD SECTION
15	TOP HOOD SKIN FOR A 1 SECTION HOOD	ALUM.	
16	TOP CENTER HOOD SKIN FOR A 3 SECTION HOOD	ALUM.	
17	HOOD HAT CHANNEL	ALUM.	
18	HOOD RIDGE CAP	ALUM.	1 USED ON A 2-SECTION HOOD, 2 USED ON A 3-SECTION HOOD
19	CORNER PLATE	ALUM.	
20	CORNER SUPPORT ANGLE	ALUM.	
	21 TO 22, NO ITEMS		
23	OUTSIDE CORNER COVER	ALUM.	
24	FORMED DEEP SILL	ALUM.	USED ON LOUVER HEIGHTS <=84'
25	FORMED DEEP HEAD CAP	ALUM.	USED ON LOUVER HEIGHTS <=84'
26	OUTER CURB SKIN, 14 GA	STEEL	PLATED/PAINTED
27	INNER CURB SKIN, 14 GA	STEEL	PLATED/PAINTED
28	TOP EDGE INTERIOR CURB SUPPORT, 14 GA	STEEL	PLATED/PAINTED
29	INTERIOR CURB SUPPORT, 14 GA	STEEL	PLATED/PAINTED
30	PIANO HINGE	SS	36' MAX CONTINUOUS LENGTH, 72' MAX O.A. LENGTH PER HOOD RIDGE CAP
31	LOUVER HEAD	ALUM.	SCH601
32	LOUVER BLADE	ALUM.	SCH601
33	LOUVER JAMB	ALUM.	SCH601
34	CORNER SUPPORT BRACKET	ALUM.	28' MAX CENTERS
35	ADDITIONAL BLADE SUPPORT ANGLE 1.5x3.5	ALUM.	CAN BE USED TO REPLACE ITEM 38 IF LOUVER HEIGHT IS <=53'
36	ADDITIONAL BLADE SUPPORT ANGLE 1x4	ALUM.	CAN BE USED TO REPLACE ITEM 38 IF LOUVER HEIGHT IS <=71'
37	ADDITIONAL BLADE SUPPORT ANGLE 1.5x5.5	ALUM.	CAN BE USED TO REPLACE ITEM 38 IF LOUVER HEIGHT IS <=76'
38	ADDITIONAL BLADE SUPPORT ANGLE 1.5x6	ALUM.	USED ON LOUVER HEIGHTS >40' AND <=84' WHEN ITEM 5A OR 6A IS USED
	39, NO ITEM		
40	1/4-20 X 1 MIN MACHINE SCREW (MS)	SS	
	41, NO ITEM		
42	1/4-20 FEMALE INSERT	STEEL	PLATED
43	1/4-20 X 3/4 MIN BOLT	SS	
44	1/4-20 NUT	SS	
45	#10 X 1/2 MIN SHEET METAL SCREW (SMS)	STEEL	PLATED
46	#10 X 1.25 SMS	SS	
	47, NO ITEM		
48	5/16-18 X 3/4 MIN BOLT	SS	
	49, NO ITEM		
50	5/16 NUT	SS	
51	#10 X 3/4 MIN SMS	SS	
52	#10 X 1 MIN, SMS, COUNTER SUNK HEAD	SS	
53	1/4-14 X 1 MIN SMS (#4 MAX DRILL POINT, IF USED)	SS	IF ITEM 11 AND AIROLITE OPTIONAL CURB SANDWICH OTHER MATERIALS (ROOFING, SKIRTS, ETC.) THEN THE INSTALLER MUST USE SCREWS OF AT LEAST 1' PLUS THE TOTAL THICKNESS OF THE SANDWICHED MATERIALS TO ENSURE PROPER SCREW-CURB PENETRATION.
	54 TO 56, NO ITEMS		
57	#10 X 1/2 MIN BOLT	SS	
58	#10 NUT	SS	
59	3/16 X 3/8-1/2 SS/SS RIVET, BLIND	SS	
60	3/8-16 X 3 MIN, EXPANDABLE ANCHOR	PLATED ST.	12' MAX CENTERS, 2.5' MIN CONCRETE ENGAGEMENT, 3.25 MIN TO CONCRETE EDGE
61	#12-14 X 1 MIN SMS	PLATED ST.	4.5' MAX CENTERS W/ 3/CORNER, 1/4' MIN VERTICAL THREAD ENGAGEMENT INTO STEEL, 2' MIN TO STEEL EDGE
62	1/2 X 3 MIN LAG BOLT	PLATED ST.	8' MAX CENTERS, 2.93' MIN WOOD ENGAGEMENT, 2' MIN TO WOOD EDGE

GENERAL NOTES:

1. IT SHALL BE THE RESPONSIBILITY OF THE PERMIT HOLDER TO VERIFY THE STRUCTURAL INTEGRITY OF THE EXISTING STRUCTURE TO SUPPORT THE LOADS IMPOSED BY THE PENTHOUSE ASSEMBLY.

2. THE SCH601PD HAS BEEN DESIGNED AND QUALIFIED WITH AND WITHOUT THE OPTIONAL HOOD AND CURB IN ACCORDANCE WITH THE FLORIDA BUILDING CODE (FBC) AND TEST PROTOCOLS TAS-201 (IMPACT), TAS-202 (UNIFORM STATIC PRESSURE), AND TAS-203 (CYCLIC FATIGUE) TO A MAXIMUM DESIGN LOAD OF +/- 115 PSF.

3. A CURB MAY BE PROVIDED BY AIROLITE (AS SHOWN ON SHEETS 6-8, & 10) AS AN OPTION. IT IS THE RESPONSIBILITY OF THE INSTALLER TO ENSURE CURBS NOT PROVIDED BY AIROLITE MEET THE BUILDING'S WIND LOAD REQUIREMENTS AS DETERMINED BY THE BUILDING DESIGNER. IT IS THE RESPONSIBILITY OF THE INSTALLER TO DETERMINE PROPER PENTHOUSE-TO-CURB FASTENING WHEN A NON-AIROLITE CURB IS USED.

4. HOOD AS PROVIDED BY AIROLITE (AS SHOWN ON SHEETS 1, 3, 5, & 9-10) IS AN OPTION FOR USE AS AN ENCLOSURE. PENTHOUSE WITH HOOD BY OTHERS IS NOT A QUALIFIED PRODUCT.

5. LOUVER CONSTRUCTION: HEADS, JAMBS, AND BLADES ARE SQUARE CUT AT BOTH ENDS. SILLS ARE MITERED AT BOTH ENDS. OVERALL LOUVER SECTION SIZES GREATER THAN 72" WIDE CONSIST OF TWO LOUVERS WHICH SHARE A COMMON SILL. BLADE SPACING IS 2" MAX. EACH JAMB IS SECURED TO THE SILL WITH (2) #10x1" COUNTERSUNK SHEET METAL SCREWS AND WELDED. BLADES AND HEADS ARE SECURED TO JAMBS WITH (2) #10x1.25" SHEET METAL SCREWS AND WELDED.

6. ALL WOOD SUBSTRATE SHALL BE G = 0.55 DENSITY OR BETTER.

7. ALL METAL STUD SUBSTRATE SHALL BE MIN. 16 GA. FY = 50 KSI.

8. ALL STRUCTURAL STEEL SUBSTRATE SHALL BE MIN. 1/4" THICK FY = 36 KSI.

9. ALL CONCRETE SUBSTRATE SHALL BE MIN. 3000 PSI.

10. CONCRETE MASONRY SHALL BE ASTM C90, TYPE II, MIN. 2000 PSI GROUT-FILLED.

11. AIROLITE DOES NOT DETERMINE THE STRUCTURAL INTEGRITY OF THE SUBSTRATE STRUCTURE.

12. THE SYSTEM SHALL ONLY BE INSTALLED IN A LOCATION WHERE THE ENCLOSED AREA/ROOM INSIDE THE PENTHOUSE IS DESIGNED TO DRAIN WATER PENETRATING INTO THE AREA/ROOM, AND THE AREA/ROOM WILL HOUSE WATER RESISTANT/PROOF EQUIPMENT, COMPONENTS, AND/OR SUPPLIES.

13. INSTALLER TO PROVIDE SEPARATION OF DISSIMILAR MATERIALS AS REQUIRED.

14. PLATED/PAINTED STEEL ITEMS MAY BE REPLACED WITH EQUIVALENT STAINLESS STEEL ITEMS.

PRODUCT REVISED
as complying with the Florida Building Code
Acceptance No 13051007
Expiration Date 06/19/2018
By
Miami Dade Product Control

PRODUCT REVISED
as complying with the Florida Building Code
NOA-No. 16-0201.13
Expiration Date 06/19/2018
By
Miami-Dade Product Control

Approved as complying with the Florida Building Code
Date 06/19/08
NOA# 06-0501.01
Miami Dade Product Control Division
By

DRAWN BY M. STEELE
DATE 4/3/08
SCALE
SHEET NO. 11 OF 11
CAD DRAWING NO. SCH601PD

AIROLITE
The look that works.™
SCHOFIELD, WISCONSIN 54476
715-359-6171

TITLE SCH601PD, OPTIONAL HOOD, & OPTIONAL CURB GENERAL NOTES & ITEMIZED PARTS LISTING

L. DAVID RICE

APR 16 2008

RICE ENGINEERING
105 School Creek Trail
Luxemburg, WI 54217
Phone: 920.845.1042
Fax: 920.845.1048
www.rice-inc.com

Florida Firm No: F-01000005061
Certificate of Authorization: #9090
L. David Rice
Registration No: 50923