MIAMI-DADE COUNTY
PRODUCT CONTROL SECTION
11805 SW 26 Street, Room 208
Miami, Florida 33175-2474
T (786) 315-2590 F (786) 315-2599
www.miamidade.gov/economy

DEPARTMENT OF REGULATORY AND ECONOMIC RESOURCES (RER)
BOARD AND CODE ADMINISTRATION DIVISION

NOTICE OF ACCEPTANCE (NOA)

The Airolite Company, LLC
P.O. Box 410
Schofield, WI 54476

SCOPE:

This NOA is being issued under the applicable rules and regulations governing the use of construction materials. The documentation submitted has been reviewed and accepted by Miami-Dade County RER - Product Control Section to be used in Miami Dade County and other areas where allowed by the Authority Having Jurisdiction (AHJ).

This NOA shall not be valid after the expiration date stated below. The Miami-Dade County Product Control Section (In Miami Dade County) and/or the AHJ (in areas other than Miami Dade County) reserve the right to have this product or material tested for quality assurance purposes. If this product or material fails to perform in the accepted manner, the manufacturer will incur the expense of such testing and the AHJ may immediately revoke, modify, or suspend the use of such product or material within their jurisdiction. RER reserves the right to revoke this acceptance, if it is determined by Miami-Dade County Product Control Section that this product or material fails to meet the requirements of the applicable building code.

This product is approved as described herein, and has been designed to comply with the Florida Building Code, including the High Velocity Hurricane Zone.

DESCRIPTION: Model T9106MD Acoustical Aluminum Louver

APPROVAL DOCUMENT: Drawing No. **T9106MD**, titled "T9106MD NOA Drawings", sheets 1 through 15 of 15, dated 08/08/2014, prepared by Greenheck Fan Corporation, signed and sealed by Chander P. Nangia, P.E., bearing the Miami-Dade County Product Control revision stamp with the Notice of Acceptance number and expiration date by the Miami-Dade County Product Control Section.

MISSILE IMPACT RATING: Large and Small Missile Impact Resistant

LABELING: Each unit shall bear a permanent label with the manufacturer's name or logo, city, state, model/series, and following statement: "Miami-Dade County Product Control Approved", unless otherwise noted herein.

RENEWAL of this NOA shall be considered after a renewal application has been filed and there has been no change in the applicable building code negatively affecting the performance of this product.

TERMINATION of this NOA will occur after the expiration date or if there has been a revision or change in the materials, use, and/or manufacture of the product or process. Misuse of this NOA as an endorsement of any product, for sales, advertising or any other purposes shall automatically terminate this NOA. Failure to comply with any section of this NOA shall be cause for termination and removal of NOA.

ADVERTISEMENT: The NOA number preceded by the words Miami-Dade County, Florida, and followed by the expiration date may be displayed in advertising literature. If any portion of the NOA is displayed, then it shall be done in its entirety.

INSPECTION: A copy of this entire NOA shall be provided to the user by the manufacturer or its distributors and shall be available for inspection at the job site at the request of the Building Official.

This NOA **revises NOA # 14-0902.08** and consists of this page 1 and evidence page E-1, as well as approval document mentioned above.

The submitted documentation was reviewed by **Carlos M. Utrera, P.E.**

MIAMI-DADE COUNTY APPROVED

06/02/2016

NOA No. 16-0201.18
Expiration Date: November 20, 2019
Approval Date: June 9, 2016

NOTICE OF ACCEPTANCE: EVIDENCE SUBMITTED

A. DRAWINGS

1. Drawing No. **T9106MD**, titled "T9106MD NOA Drawings", sheets 1 through 15 of 15, dated 08/08/2014, prepared by Greenheck Fan Corporation, signed and sealed by Chander P. Nangia, P.E.

B. TESTS *"Submitted under NOA # 14-0902.08"*

1. Test report on 1) Uniform Static Air Pressure Test per FBC, TAS 202-94
   2) Large Missile Impact Test per FBC, TAS 201-94,
   3) Cyclic Wind Pressure Test per FBC, TAS 203-94,
   along with marked-up drawings and installation diagram of Model T9106MD aluminum louvers, prepared by Architectural Testing, Inc., Test Report No. **D7317.01-602-18**, dated 06/26/2014, signed and sealed by Shawn G. Collins, P.E.

C. CALCULATIONS *"Submitted under NOA # 14-0902.08"*

1. Structural and anchors calculations prepared by Chander P. Nangia, P.E., dated 08/08/2009, signed and sealed by Chander P. Nangia, P.E.

D. QUALITY ASSURANCE

1. Miami-Dade Department of Regulatory and Economic Resources (RER)

E. MATERIAL CERTIFICATIONS

1. None.

F. STATEMENTS

1. Statement letter of code compliance to the 5th edition (2014) FBC and of no financial interest issued by Chander P. Nangia, P.E., dated 01/11/2016, signed and sealed by Chander P. Nangia, P.E.

   "Submitted under NOA # 14-0902.08"

2. Statement letter of code compliance to 2010 FBC and no financial interest issued by Chander P. Nangia, P.E., dated 08/25/2014, signed and sealed by Chander P. Nangia, P.E.
3. Private label agreement dated 01/17/2007.

06/02/2016

Carlos M. Utrera, P.E.
Product Control Examiner
NOA No. 16-0201.18
Expiration Date: November 20, 2019
Approval Date: June 9, 2016

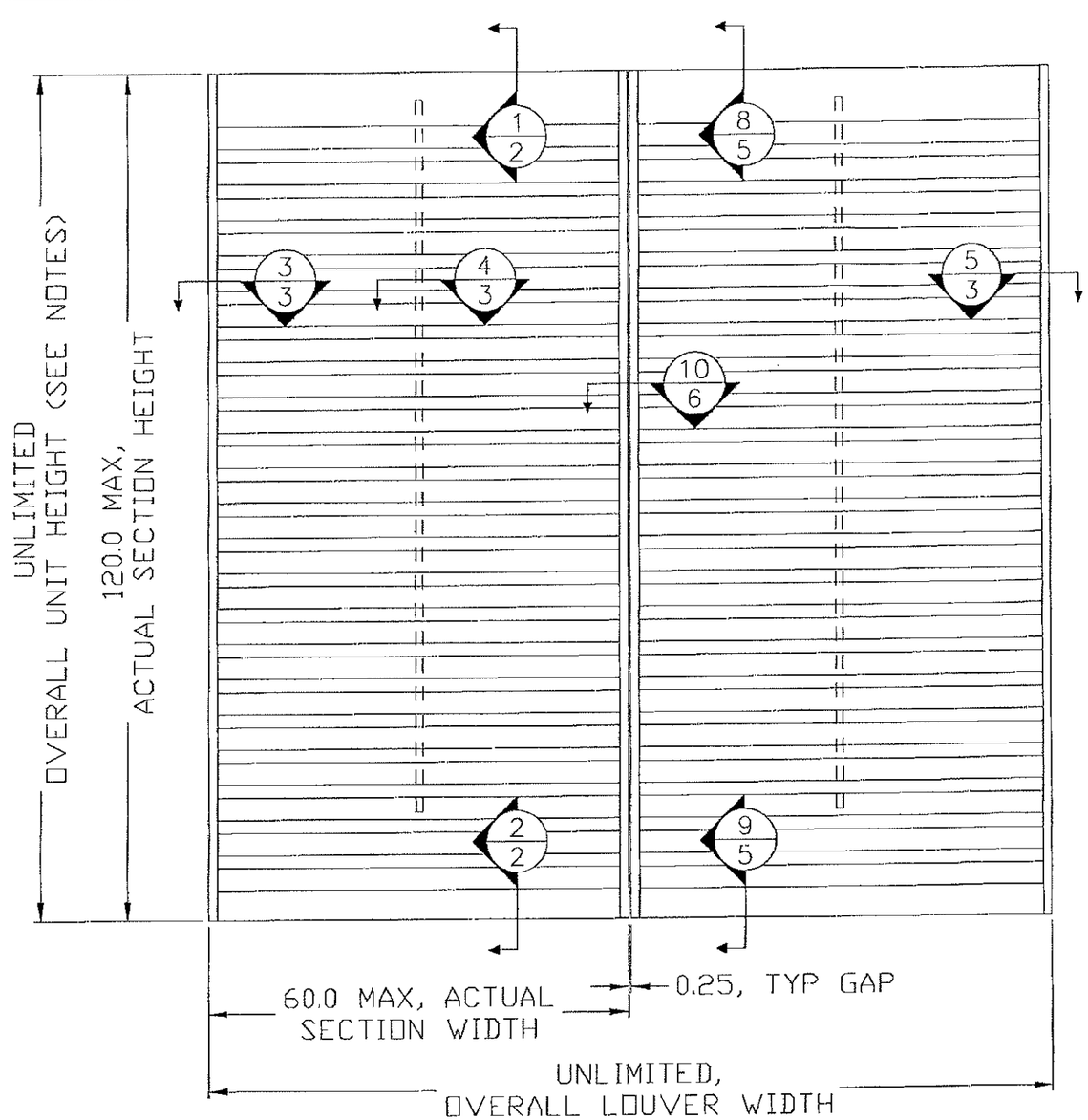

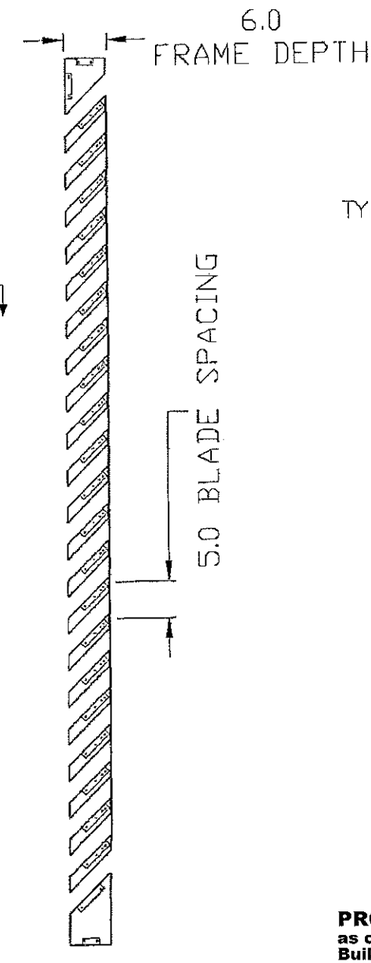

TYPICAL CALLOUT

DETAIL #

PAGE #

PRODUCT REVISED
as complying with the Florida Building Code
NOA-No. 16-0201.18
Expiration Date 11/20/2019
By
Miami-Dade Product Control

Approved as complying with the Florida Building Code
Date 11/20/2014
NOAB 16-0902.08
Miami Dade Product Control
By

NOTES:

- SINGLE-WIDE BY MULTI-HIGH ASSEMBLIES ARE PERMITTED AS LONG AS EACH SECTION'S HEIGHT AND WIDTH ARE WITHIN THE ALLOWABLE MAXIMUMS, EACH INDIVIDUAL SECTION HAS A HEAD AND SILL MEMBER, AND JAMB MOUNTING IS FOLLOWED AS SHOWN HEREIN.
- MULTI-WIDE BY SINGLE-HIGH ASSEMBLIES ARE PERMITTED AS LONG AS EACH SECTION'S HEIGHT AND WIDTH ARE WITHIN THE ALLOWABLE MAXIMUMS, MULLION SPACING IS 60.25 MAX ON CENTER, AND JAMB/MULLION MOUNTING IS FOLLOWED AS SHOWN HEREIN.
- MULTI-WIDE BY MULTI-HIGH ASSEMBLIES ARE PERMITTED AS LONG AS THE ABOVE TWO NOTES ARE FOLLOWED, AND THERE IS SUITABLE LOAD-BEARING STRUCTURE (BY OTHERS) AT EACH SECTION'S HEAD/SILL MULLION ATTACHMENT LOCATION AND MULLION MOUNTING IS FOLLOWED AS SHOWN HEREIN. THE MULLION(S) MUST TERMINATE AT EACH SECTION'S HEAD/SILL LOCATION AS SHOWN HEREIN.

DRAWN BY MES	DATE 8/8/14
SCALE	
SHEET NO. 1 OF 15	
CAD DRAWING NO. T9106MD	

AIROLITE
The look that works™
SCHOFIELD, WISCONSIN 54476
715-359-6171

TITLE
T9106MD
NOA DRAWINGS
ELEVATION

CHANDER P. NANGIA
LICENSE
No. 21938
STATE OF FLORIDA
PROFESSIONAL ENGINEER

AUG 20 2014

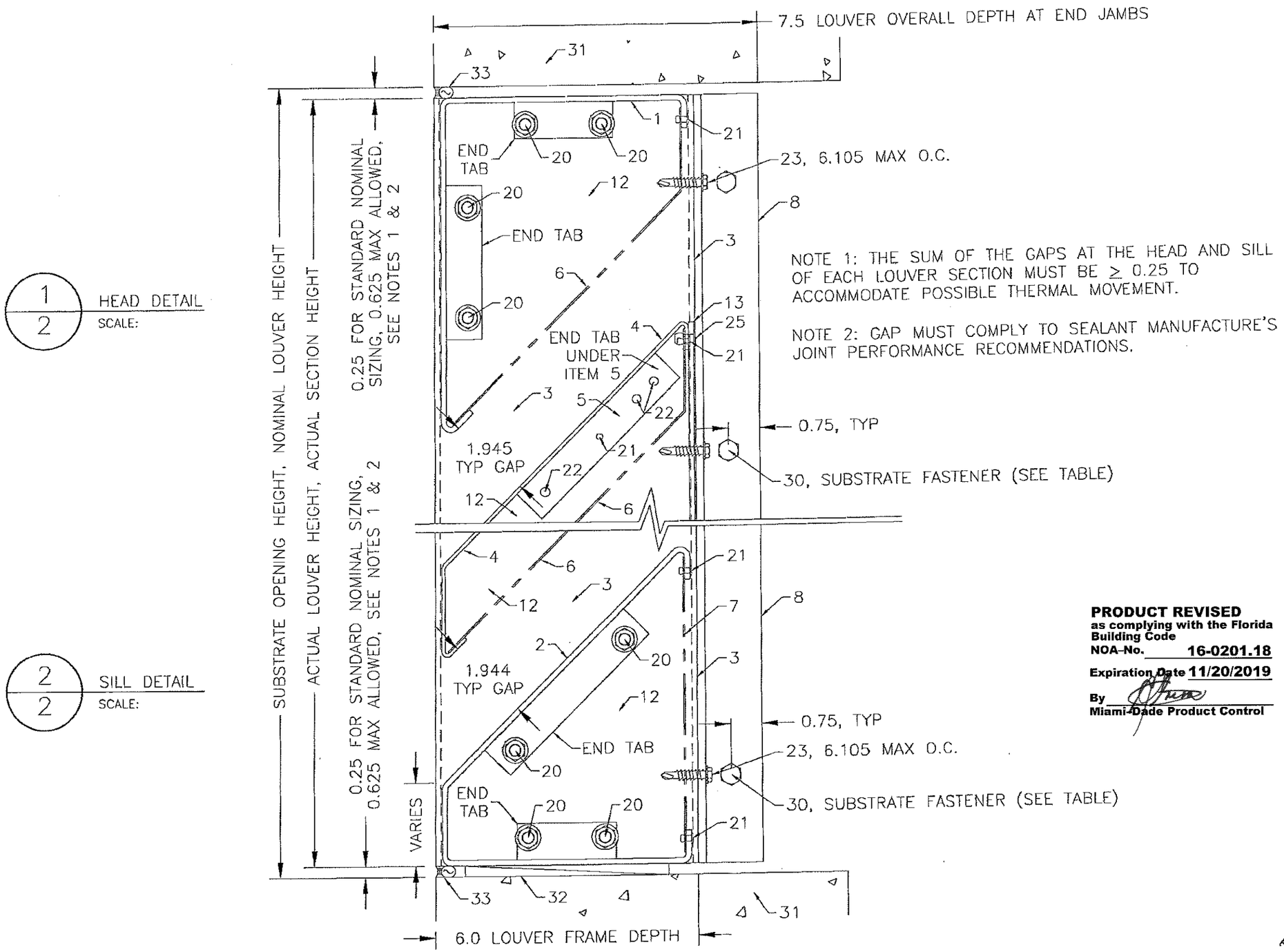

1/2 HEAD DETAIL
SCALE:

2/2 SILL DETAIL
SCALE:

NOTE 1: THE SUM OF THE GAPS AT THE HEAD AND SILL OF EACH LOUVER SECTION MUST BE ≥ 0.25 TO ACCOMMODATE POSSIBLE THERMAL MOVEMENT.

NOTE 2: GAP MUST COMPLY TO SEALANT MANUFACTURE'S JOINT PERFORMANCE RECOMMENDATIONS.

PRODUCT REVISED
as complying with the Florida Building Code
NOA-No. 16-0201.18
Expiration Date 11/20/2019
By
Miami-Dade Product Control

Approved as complying with the Florida Building Code
Date 11/20/14
NOA# 14-0902.08
Miami Dade Product Control
By

CHANDER P. NANGIA
LICENSE
No. 21038
STATE OF FLORIDA
PROFESSIONAL ENGINEER

AUG 30 2014

AIRCOLITE
The look that works™
SCHOFIELD, WISCONSIN 54476
715-359-5171

DRAWN BY MES	DATE 8/8/14
SCALE	
SHEET NO. 2 OF 15	
CAD DRAWING NO. T9106MD	
TITLE T9106MD NOA DRAWINGS DETAILS	

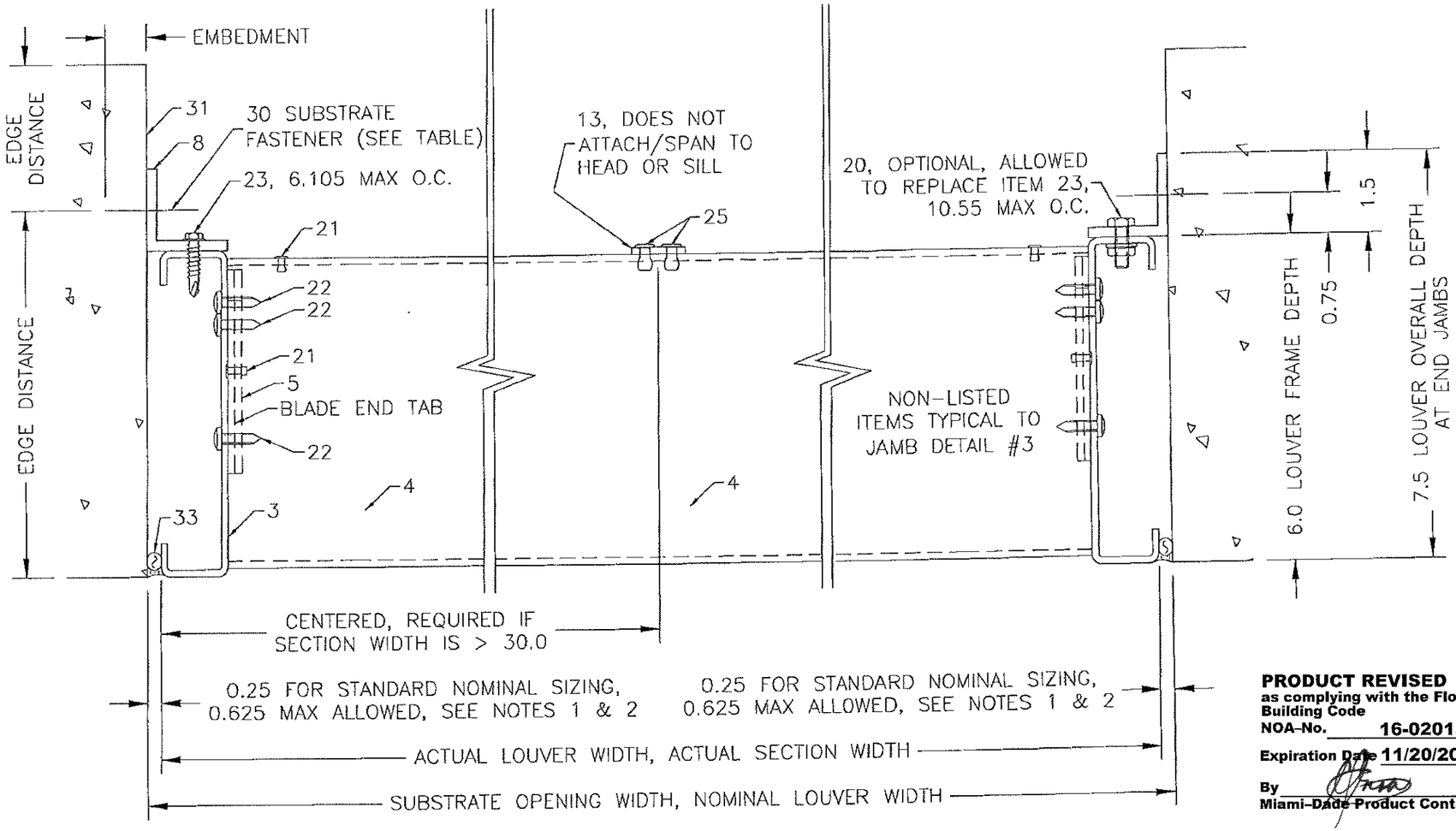

PRODUCT REVISED
as complying with the Florida Building Code
NOA-No. 16-0201.18
Expiration Date 11/20/2019
By
Miami-Dade Product Control

3/3 JAMB DETAIL
SCALE:

4/3 BLADE SUPPORT DETAIL
SCALE:

5/3 JAMB DETAIL
SCALE:

NOTE 1: THE SUM OF THE GAPS AT THE JAMBS OF EACH LOUVER SECTION MUST BE ≥ 0.125 TO ACCOMMODATE POSSIBLE THERMAL MOVEMENT.

NOTE 2: GAP MUST COMPLY TO SEALANT MANUFACTURE'S JOINT PERFORMANCE RECOMMENDATIONS.

AIROLITE
The look that works.™
SCHOFIELD, WISCONSIN 54476
715-359-6171

DRAWN BY MES
DATE 8/8/14
SCALE
SHEET NO. 3 OF 15
CAD DRAWING NO. T9106MD

TITLE
T9106MD
NOA DRAWINGS
DETAILS

Approved as complying with the Florida Building Code
Date 11/20/2014
NOA# 16-0402.03
Miami Dade Product Control
By

CHANDER P. NANGIA
LICENSE
No. 21938
STATE OF FLORIDA
PROFESSIONAL ENGINEER

AUG 20 2014

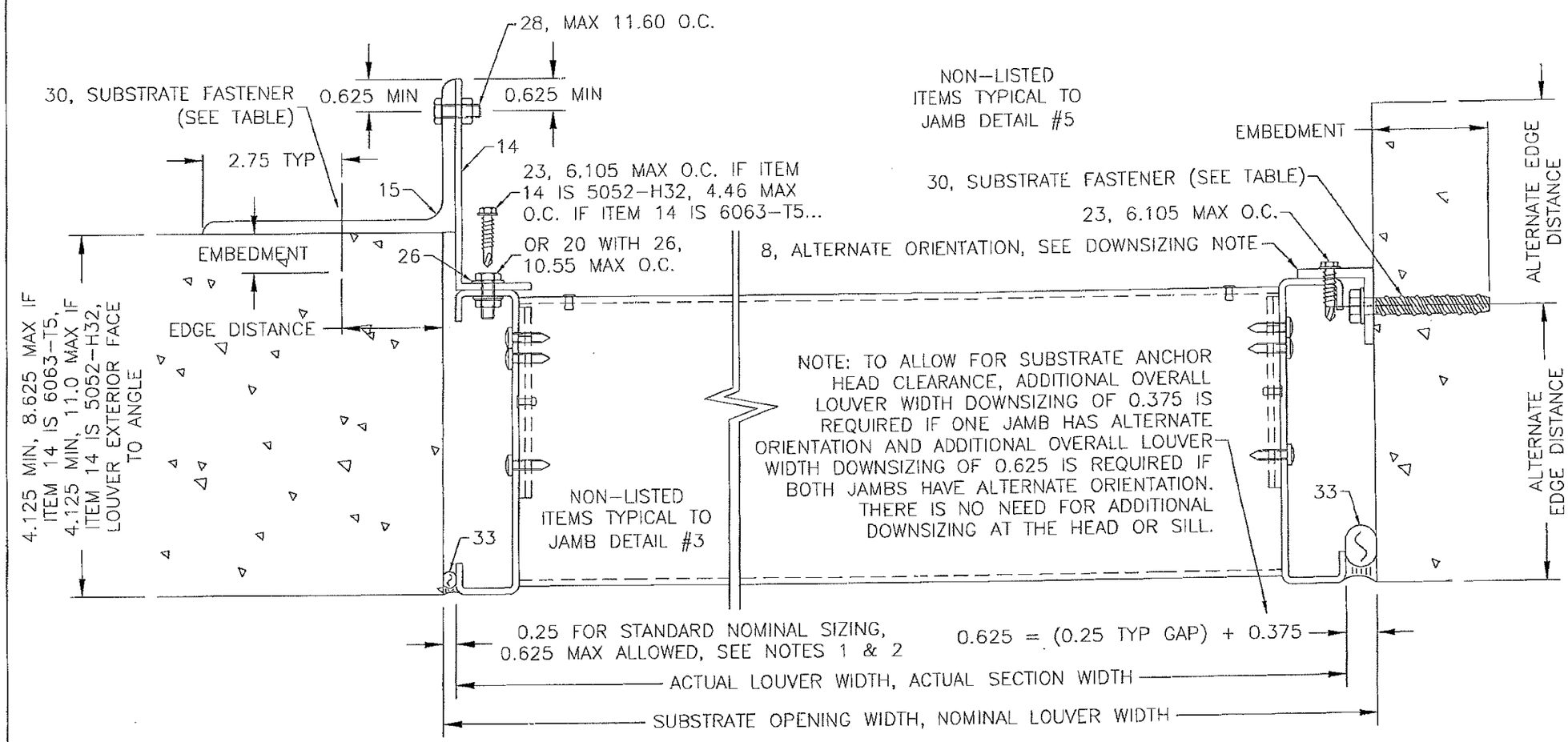

6/4 JAMB DETAIL, ALTERNATE JAMB MOUNTING ANGLES
SCALE:

7/4 JAMB DETAIL, MOUNTING ANGLE ALTERNATE ORIENTATION
SCALE:

NOTE 1: THE SUM OF THE GAPS AT THE JAMBS OF EACH LOUVER SECTION MUST BE ≥ 0.125 TO ACCOMMODATE POSSIBLE THERMAL MOVEMENT.

NOTE 2: GAP MUST COMPLY TO SEALANT MANUFACTURE'S JOINT PERFORMANCE RECOMMENDATIONS.

PRODUCT REVISED
as complying with the Florida Building Code
NOA-No. 16-0201.18
Expiration Date 11/20/2019
By
Miami-Dade Product Control

Approved as complying with the Florida Building Code
Date 11/20/2014
NOA# 14-0902.08
Miami Dade Product Control
By

CHANDER P. NANGIA
LICENSE
No. 61938
STATE OF FLORIDA
PROFESSIONAL ENGINEER
AUG 20 2014

AIRROLUTE
The look that works™
SCHOFIELD, WISCONSIN 54476
715-359-6171

TITLE
T9106MD
NOA DRAWINGS
DETAILS

DATE	8/8/14
DRAWN BY	MES
SCALE	
SHEET NO.	4 OF 15
CAD DRAWING NO.	T9106MD

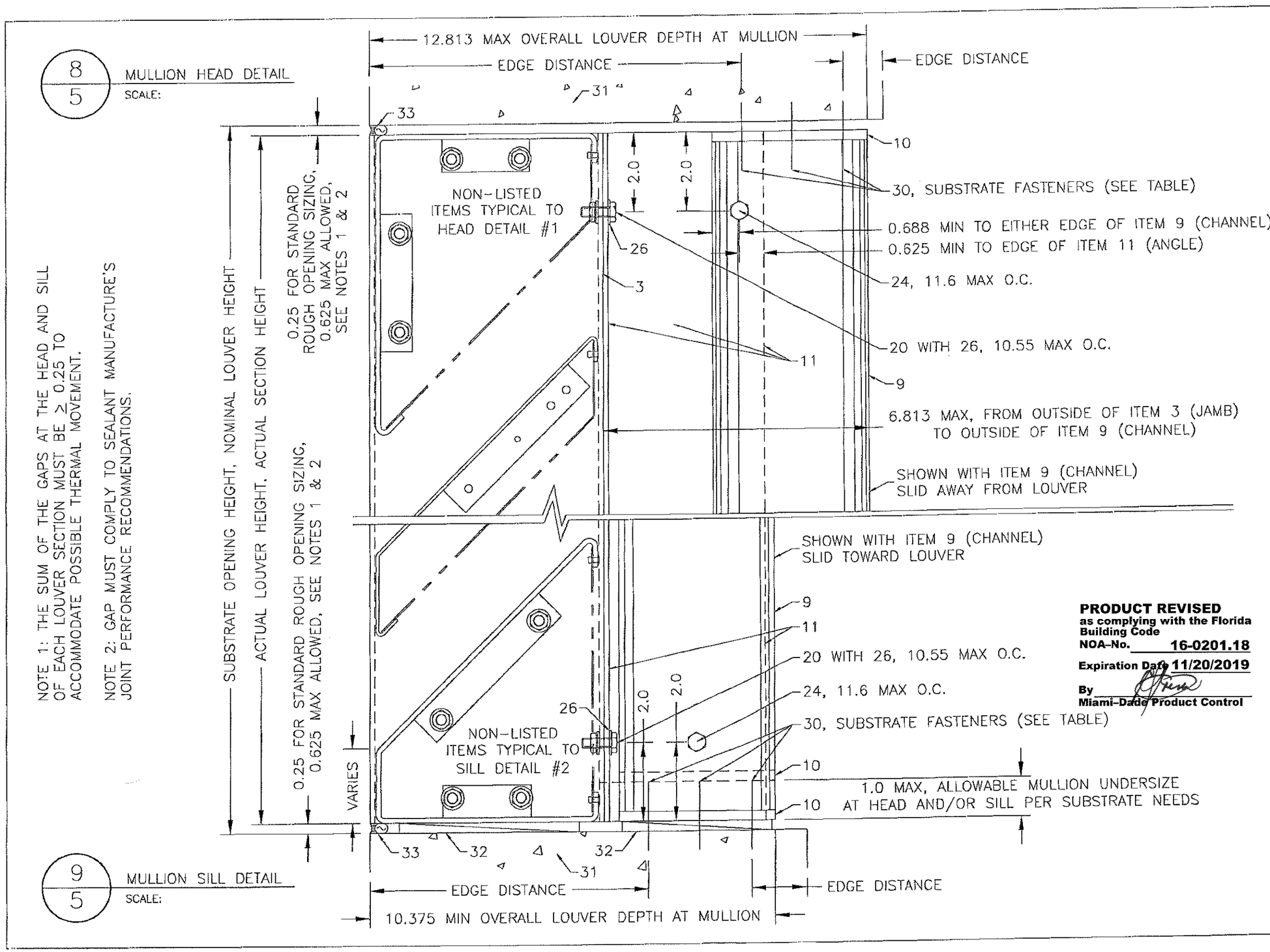

NOTE 1: THE SUM OF THE GAPS AT THE HEAD AND SILL OF EACH LOUVER SECTION MUST BE ≥ 0.25 TO ACCOMMODATE POSSIBLE THERMAL MOVEMENT.

NOTE 2: GAP MUST COMPLY TO SEALANT MANUFACTURE'S JOINT PERFORMANCE RECOMMENDATIONS.

PRODUCT REVISED
as complying with the Florida Building Code
NOA-No. 16-0201.18
Expiration Date 11/20/2019
By
Miami-Dade Product Control

Approved as complying with the Florida Building Code
Date 11/20/2014
NOA# 14-0902.08
Miami Dade Product Control
By

CHANDER P. NAMGIA
LICENSE
NO. 21938
STATE OF FLORIDA
PROFESSIONAL ENGINEER
AUG 20 2014

AIROLITE
The look that works™
SCHOFIELD, WISCONSIN 54476
715-359-6171

DRAWN BY MES	DATE 8/8/14
SCALE	
SHEET NO. 5 OF 15	
CAD DRAWING NO. T9106MD	

TITLE
T9106MD
NOA DRAWINGS
DETAILS

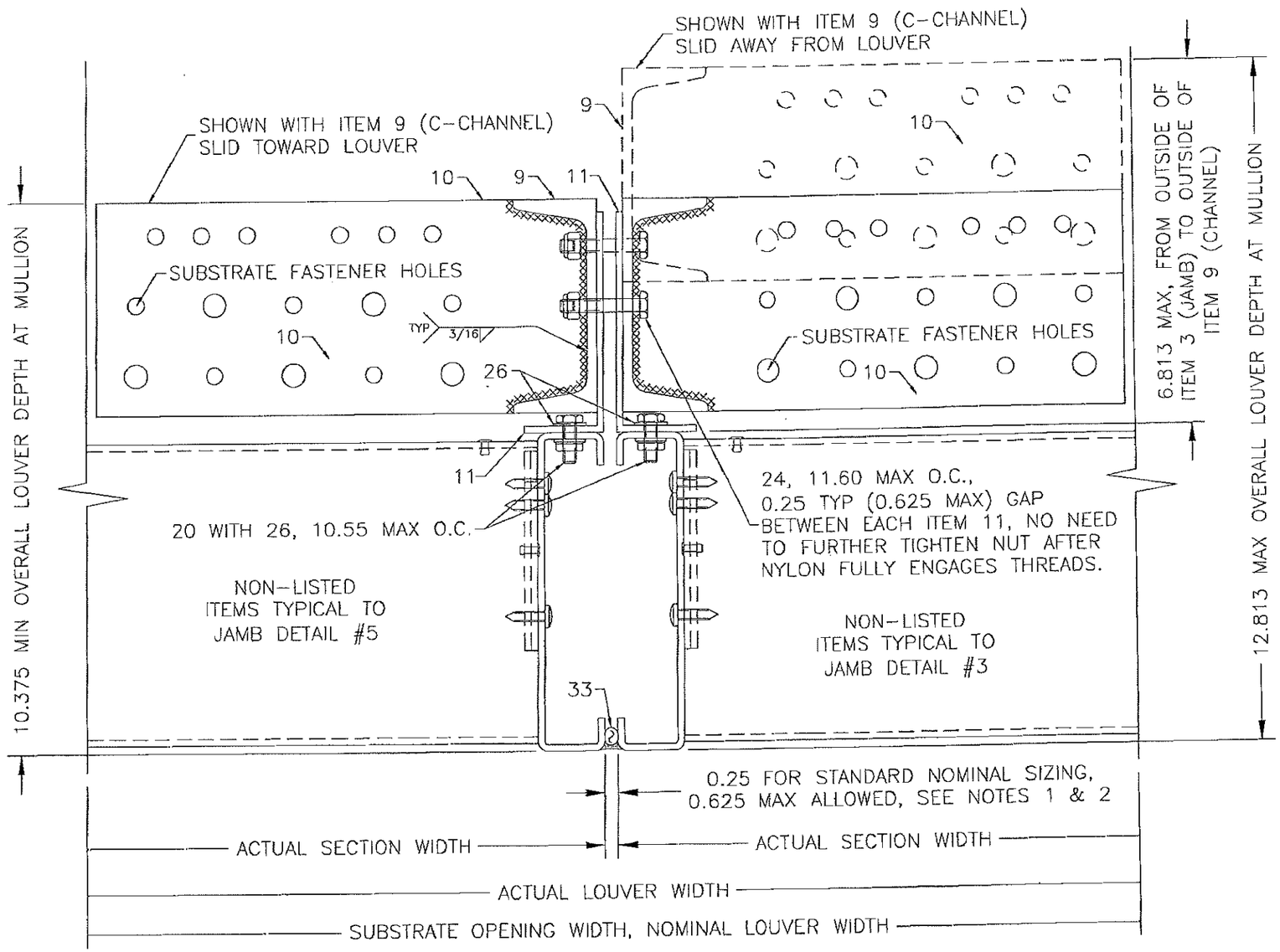

10/6 MULLION DETAIL
SCALE:

NOTE 1: THE SUM OF THE GAPS AT THE JAMBS OF EACH LOUVER SECTION MUST BE ≥ 0.125 TO ACCOMMODATE POSSIBLE THERMAL MOVEMENT.

NOTE 2: GAP MUST COMPLY TO SEALANT MANUFACTURE'S JOINT PERFORMANCE RECOMMENDATIONS.

PRODUCT REVISED
as complying with the Florida Building Code
NOA-No. 16-0201.18
Expiration Date 11/20/2019
By
Miami-Dade Product Control

AIROLITE
The look that works™
SCHOFIELD, WISCONSIN 54476
715-359-6171

TITLE: T9106MD NOA DRAWINGS DETAILS

DRAWN BY: MES
DATE: 8/8/14
SCALE:
SHEET NO.: 6 OF 15
CAD DRAWING NO.: T9106MD

Approved as complying with the Florida Building Code
Date 11/20/2014
NOA# 14-0902.08
Miami Dade Product Control
By

CHANDER R. NANGIA
LICENSE
No. 21933
STATE OF FLORIDA
PROFESSIONAL ENGINEER
AUG 20 2014

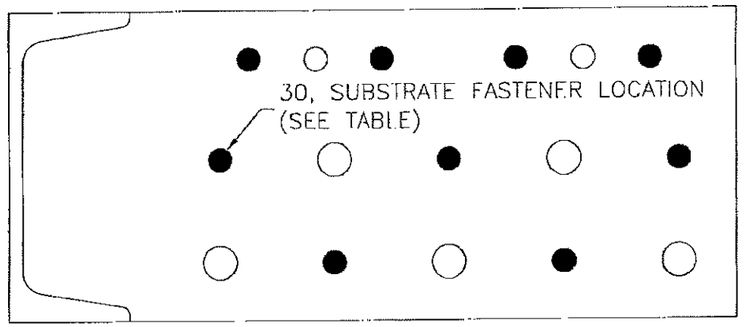

1/4 FASTENERS INTO:
WOOD, GROUT FILLED CMU, CONCRETE

USE SHOWN FASTENER PATTERN.

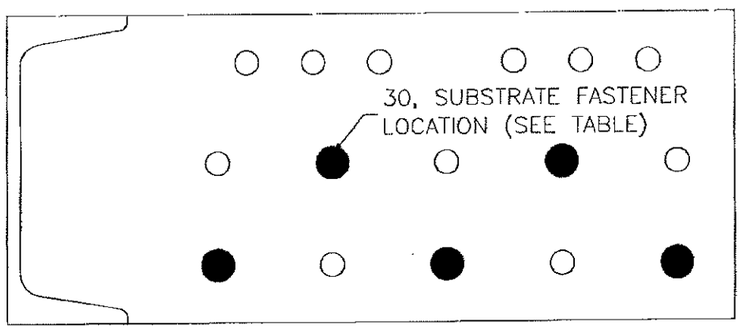

3/8 FASTENERS INTO:
WOOD, GROUT FILLED CMU, CONCRETE

USE SHOWN FASTENER PATTERN.

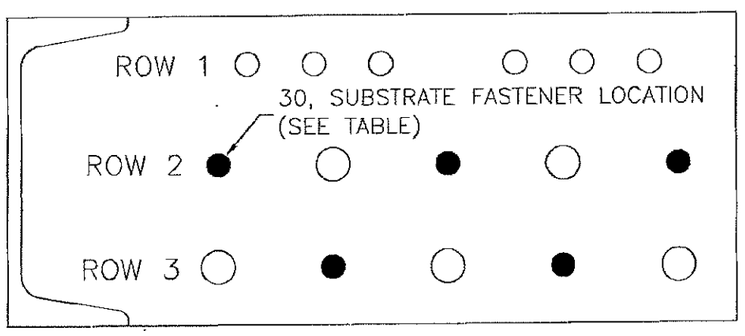

1/4 FASTENERS INTO:
STEEL STUD, STRUCTURAL STEEL, ALUMINUM

NOTE: ANY Ø0.3125 HOLE CAN BE USED FOR SUBSTRATE ANCHORS AS LONG AS A MINIMUM OF TWO ROWS HAVE FASTENERS, AND A MINIMUM OF TWO FASTENERS IN EACH USED ROW.

PRODUCT REVISED
as complying with the Florida Building Code
NOA-No. 16-0201.18
Expiration Date 11/20/2019
By
Miami-Dade Product Control

11
7

MULLION END PLATE SUBSTRATE FASTENER LOCATIONS

SCALE:

DATE 8/8/14
DRAWN BY MES
SCALE
SHEET NO. 7 OF 15
CAD DRAWING NO. T9106MD

AIROLITE
The look that works.™
SCHOFIELD, WISCONSIN 54476
715-359-8171

TITLE
T9106MD
NOA DRAWINGS
DETAILS

Approved as complying with the Florida Building Code
Date 11/20/2014
NOA# 14-0901.08
Miami Dade Product Control
By

CHANDER P. NANGIA
LICENSE
No. 21938
STATE OF FLORIDA
PROFESSIONAL ENGINEER

AUG 20 2014

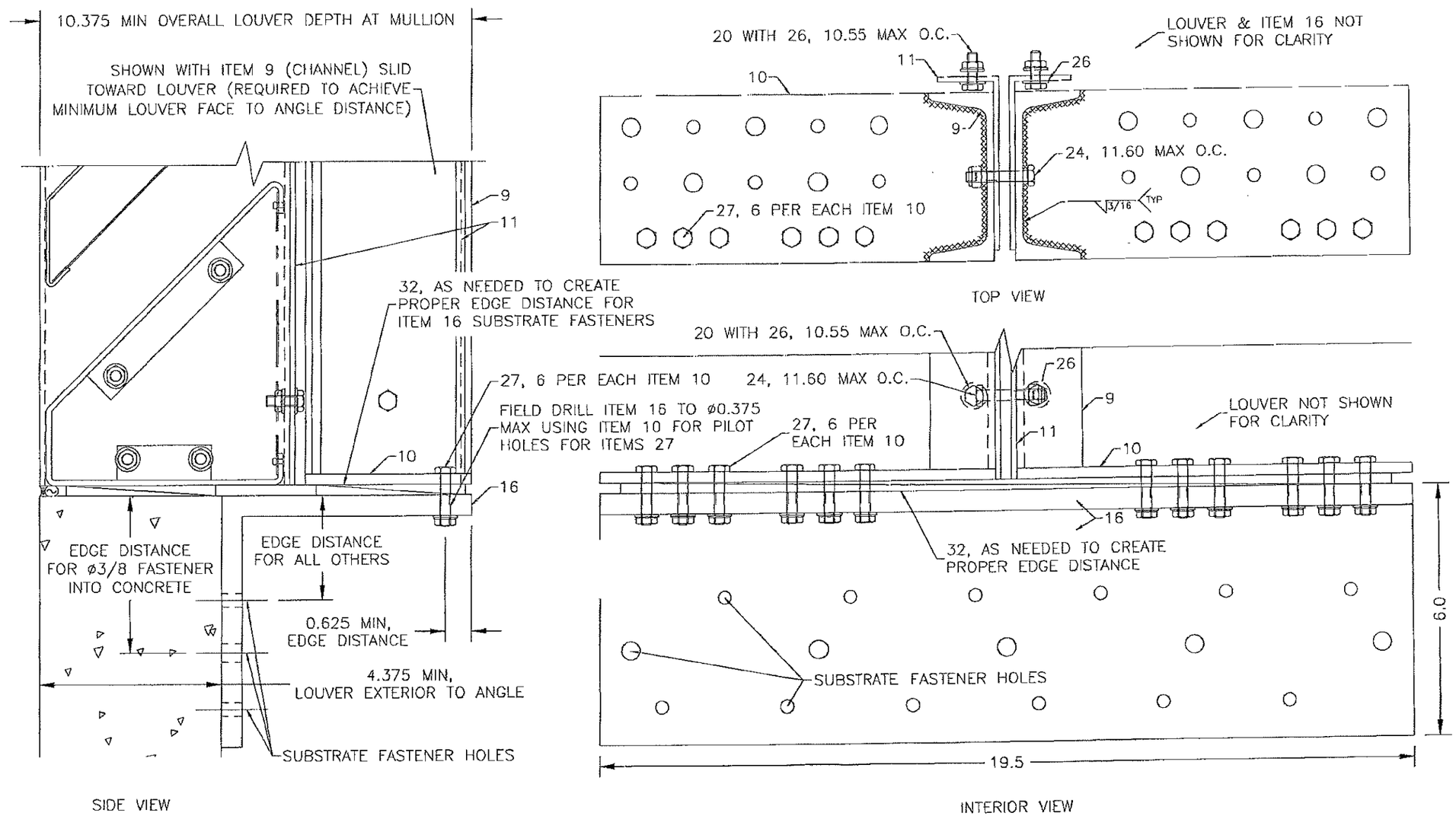

NON-LISTED ITEMS TYPICAL TO SILL DETAIL #9

12/8 MULLION SILL DETAIL, ALTERNATE MOUNTING ANGLE, SHALLOW SUBSTRATE (HEAD TYPICAL)

SCALE:

PRODUCT REVISED
as complying with the Florida Building Code
NOA-No. 16-0201.18
Expiration Date 11/20/2019
By
Miami-Dade Product Control

DATE	8/8/14
DRAWN BY	MES
SCALE	
SHEET NO.	8 OF 15
CAD DRAWING NO.	T9106MD

AIRCOLITE
The look that works™
SCHOFIELD, WISCONSIN 54476
715-359-6171

TITLE
T9106MD
NOA DRAWINGS
DETAILS

Approved as complying with the Florida Building Code
Date 11/20/2014
NOA# 14-0402.08
Miami Dade Product Control
By

CHANDER R. MANGA
LICENSE
No. 21938
STATE OF FLORIDA
PROFESSIONAL ENGINEER

AUG 20 2014

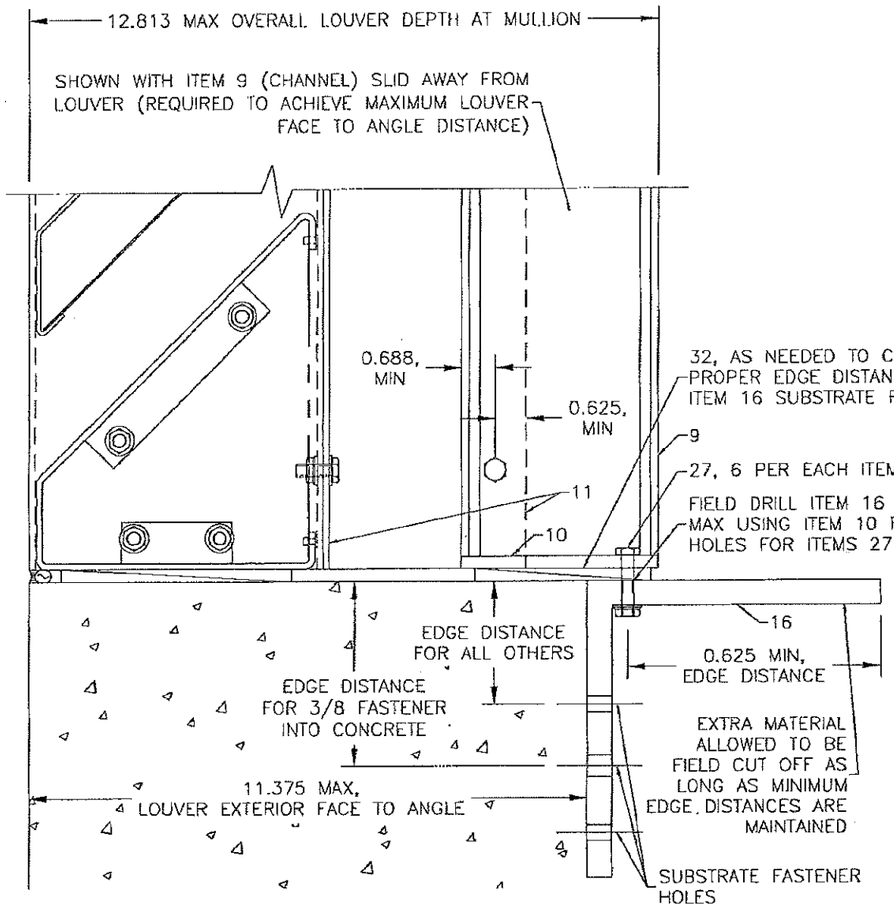

SIDE VIEW

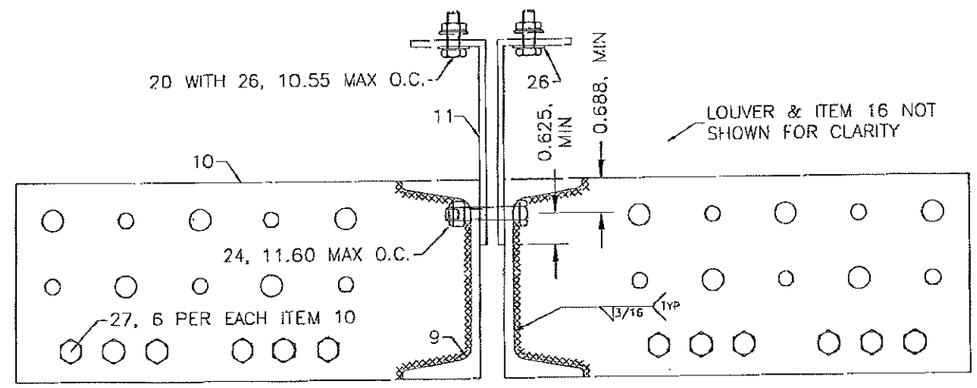

TOP VIEW

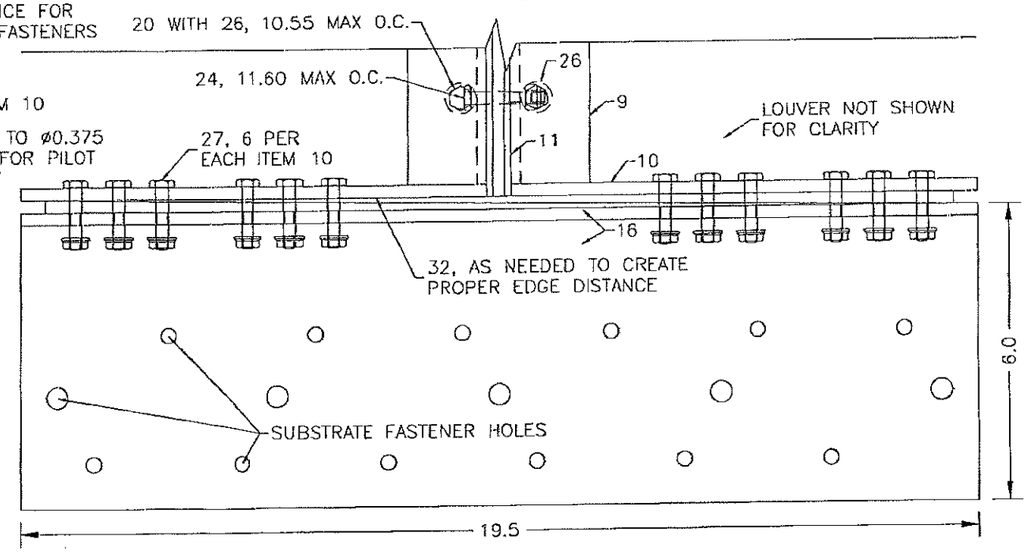

INTERIOR VIEW

NON-LISTED ITEMS TYPICAL TO SILL DETAIL #9

13/9 MULLION SILL DETAIL, ALTERNATE MOUNTING ANGLE, DEEP SUBSTRATE (HEAD TYPICAL)

SCALE:

PRODUCT REVISED
as complying with the Florida Building Code
NOA-No. 16-0201.18
Expiration Date 11/20/2019
By
Miami-Dade Product Control

DRAWN BY MES	DATE 8/8/14
SCALE	SHEET NO. 9 OF 15
	CAD DRAWING NO. T9106MD

AIROLITE
The look that works™
SCHOFIELD, WISCONSIN 54476
715-359-6171

TITLE
T9106MD
NOA DRAWINGS
DETAILS

Approved as complying with the Florida Building Code
Date 11/20/2014
NOA# 14-1902.08
Miami Dade Product Control
By

CHANDER P. MANGIA
LICENSE
No. 21938
STATE OF FLORIDA
PROFESSIONAL ENGINEER

AUG 20 2014

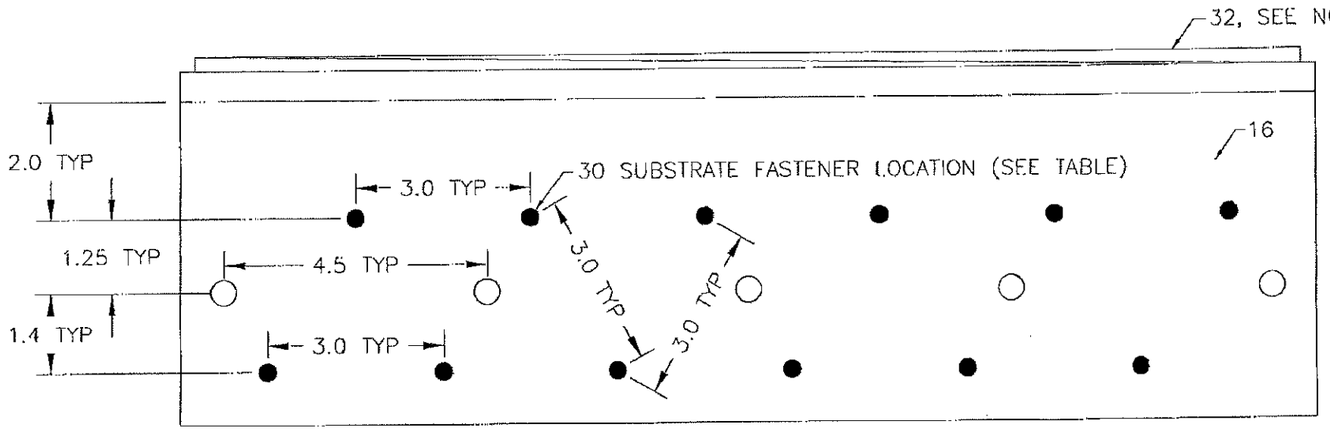

ø1/4 FASTENERS INTO:
GROUT FILLED CMU
CONCRETE

USE SHOWN FASTENER PATTERN.

NOTE: FOR ø1/4 FASTENERS INTO CONCRETE, SHIM AS NECESSARY BETWEEN MULLION END PLATE (ITEM 10) AND MULLION SECONDARY ANGLE (ITEM 16) TO CREATE THE REQUIRED 2.5 EDGE DISTANCE.

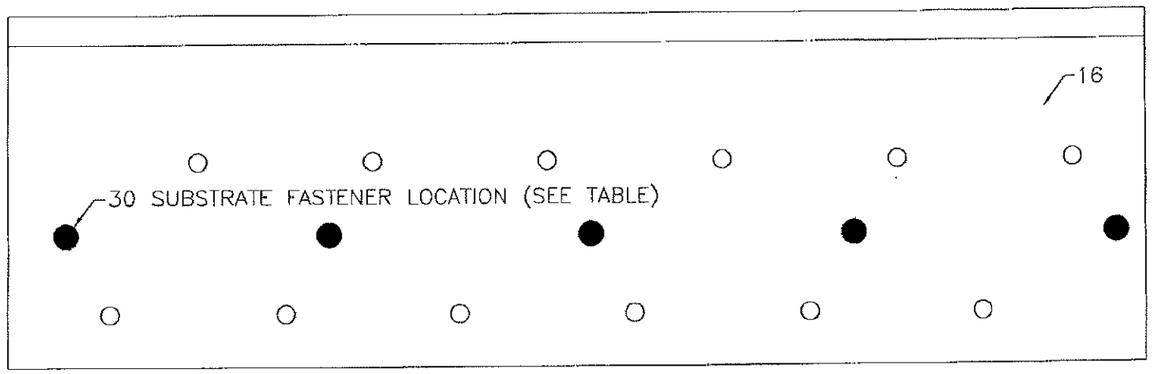

ø3/8 FASTENERS INTO:
CONCRETE

USE SHOWN FASTENER PATTERN.

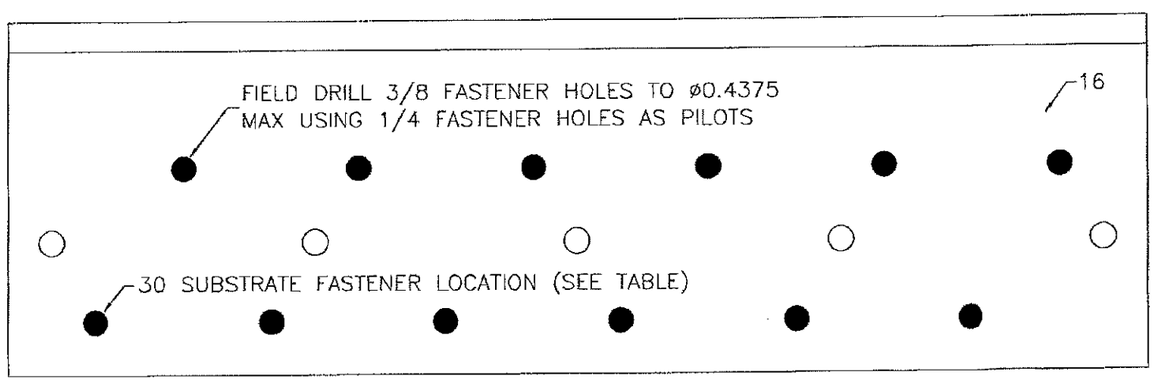

ø3/8 FASTENERS INTO:
GROUT FILLED CMU

USE SHOWN FASTENER PATTERN.

PRODUCT REVISED
as complying with the Florida Building Code
NOA-No. 16-0201.18
Expiration Date 11/20/2019
By
Miami-Dade Product Control

14/10 MULLION END SECONDARY ANGLE SUBSTRATE FASTENER LOCATIONS
SCALE:

DATE 8/8/14
DRAWN BY MES
SCALE
SHEET NO. 10 OF 15
CAD DRAWING NO. T9106MD

AIRCOLITE
The look that works™
SCHOFIELD, WISCONSIN 54476
715-359-6171

TITLE
T9106MD
NOA DRAWINGS
DETAILS

Approved as complying with the Florida Building Code
Date 11/20/2014
NOA# 14-0902.08
Miami Dade Product Control
By

CHANDER P. NANGIA
LICENSE
No. 21938
STATE OF FLORIDA
PROFESSIONAL ENGINEER
AUG 20 2014

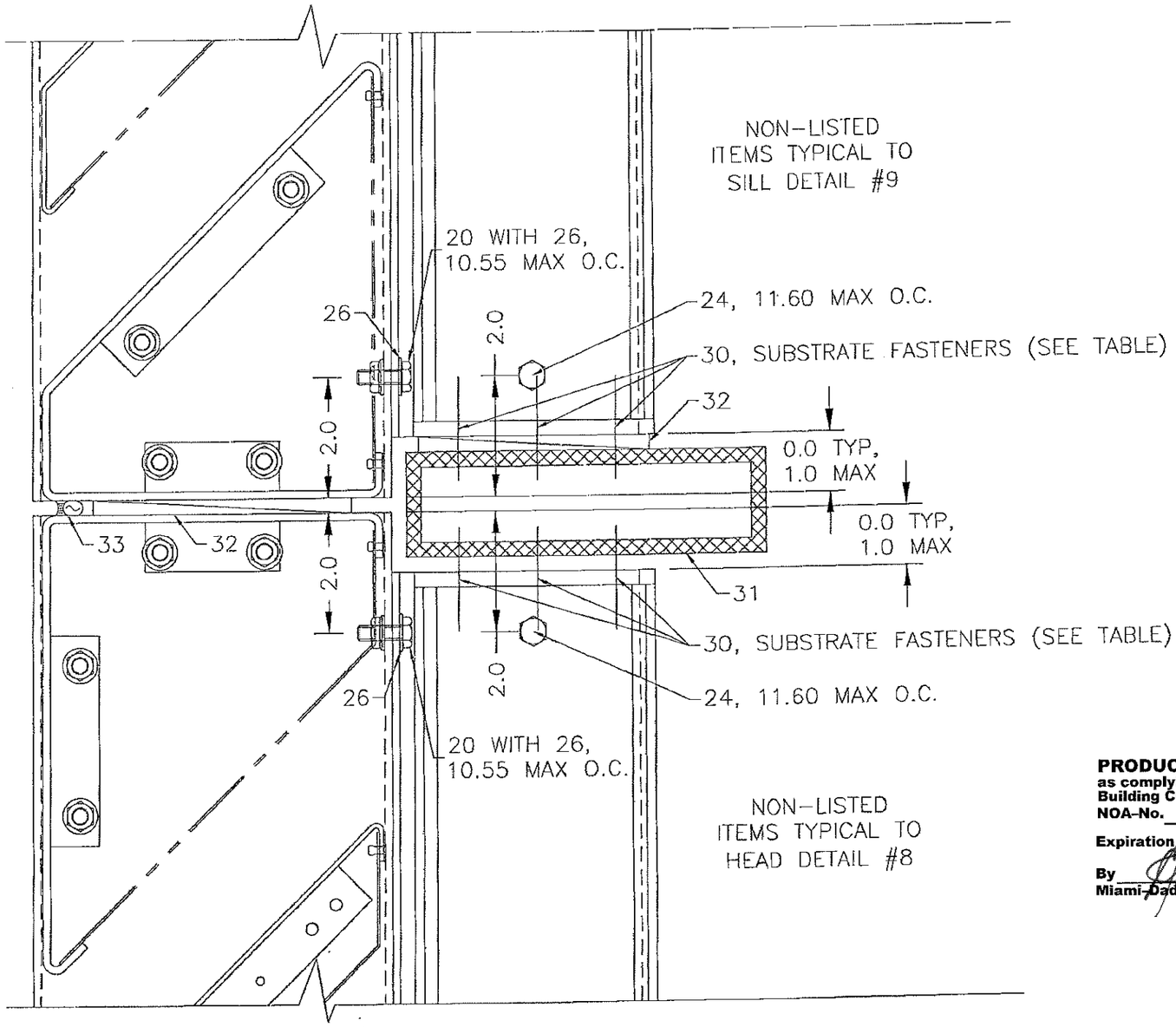

15
11

MULLION MULTI-HIGH (STACK) DETAIL

SCALE:

PRODUCT REVISED
as complying with the Florida Building Code
NOA-No. 16-0201.18
Expiration Date 11/20/2019
By
Miami-Dade Product Control

DRAWN BY MES	DATE 8/8/14
SCALE	
SHEET NO. 11 OF 15	
CAD DRAWING NO. T9106MD	

AIROLITE
The look that works™
SCHOFIELD, WISCONSIN 54476
715-359-6171

TITLE
T9106MD
NOA DRAWINGS
DETAILS

Approved as complying with the Florida Building Code
Date 11/20/2014
NOA# 14-0102.08
Miami Dade Product Control
By

CHANDER P. NANGIA
LICENSE
No. 21938
STATE OF FLORIDA
PROFESSIONAL ENGINEER

AUG 20 2014

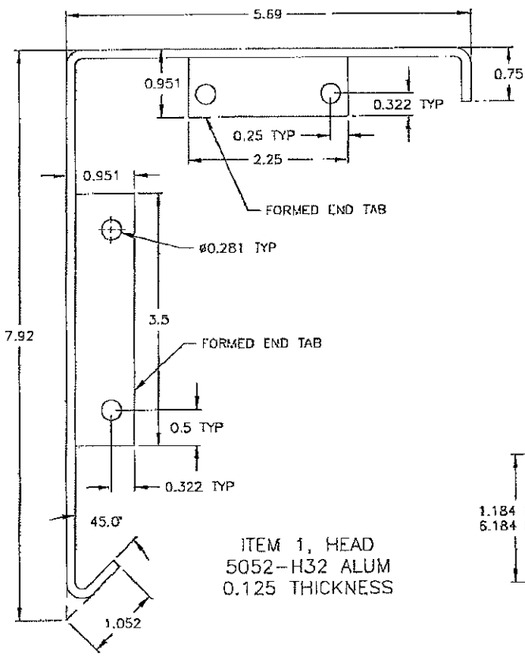

ITEM 1, HEAD
5052-H32 ALUM
0.125 THICKNESS

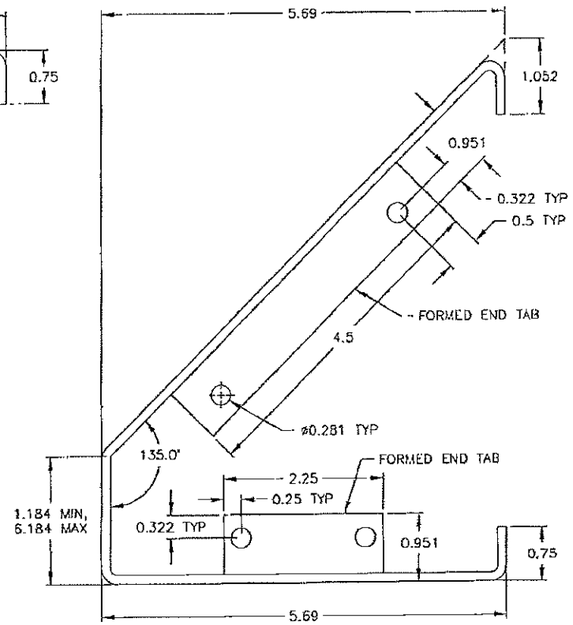

ITEM 2, SILL
5052-H32 ALUM
0.125 THICKNESS

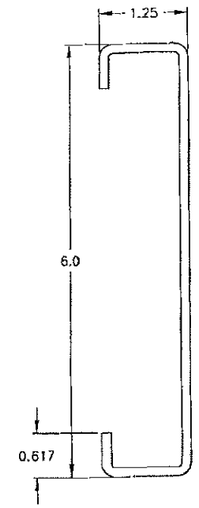

ITEM 3, JAMB
5052-H32 ALUM
0.125 THICKNESS

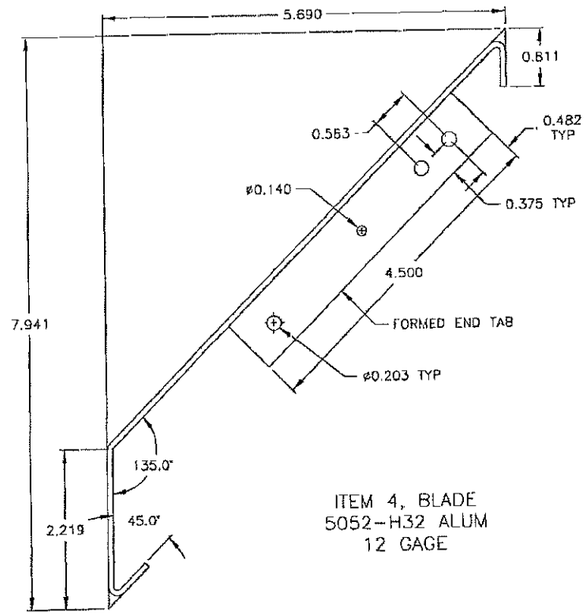

ITEM 4, BLADE
5052-H32 ALUM
12 GAGE

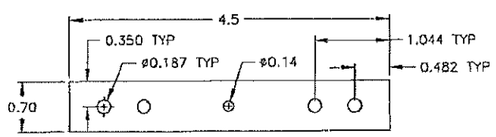

ITEM 5, SHEAR BLOCK
5052-H32 ALUM
0.125 THICKNESS

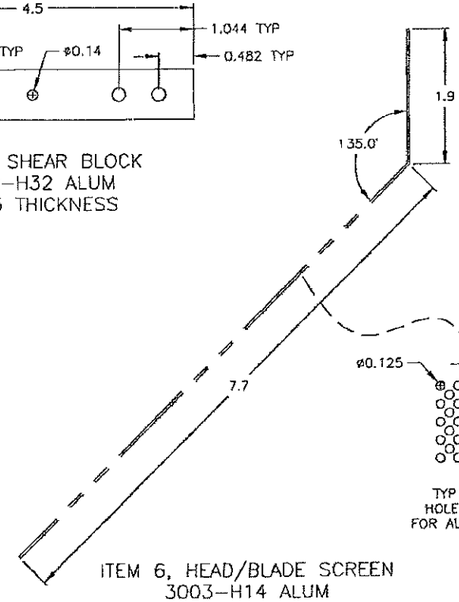

ITEM 6, HEAD/BLADE SCREEN
3003-H14 ALUM
20 GAGE

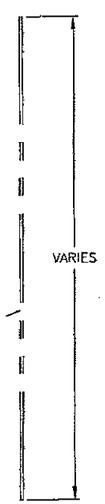

ITEM 7, SILL SCREEN
3003-H14 ALUM
20 GAGE

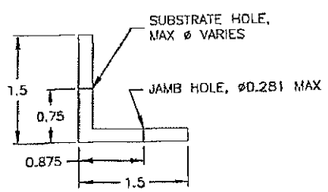

ITEM 8, JAMB MOUNTING ANGLE
6061-T6 ALUM
0.187 THICKNESS, CONTINUOUS

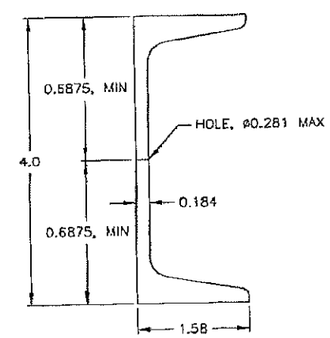

ITEM 9, MULLION CHANNEL
6061-T6 ALUM
CONTINUOUS

PRODUCT REVISED
as complying with the Florida Building Code
NOA-No. 16-0201.18
Expiration Date 11/20/2019
By
Miami-Dade Product Control

DATE 8/8/14
DRAWN BY MES
SCALE
SHEET NO. 12 OF 15
CAD DRAWING NO. T9106MD

AIROLITE
The look that works™
SCHOFIELD, WISCONSIN 54476
715-359-6171

TITLE
T9106MD
NOA DRAWINGS
PART PROFILES

Approved as complying with the Florida Building Code
Date 11/20/2014
NOA# 14-0402.08
Miami Dade Product Control
By

CHANDER P. NANGIA
LICENSE
No. 21938
STATE OF FLORIDA
PROFESSIONAL ENGINEER

AUG 20 2014

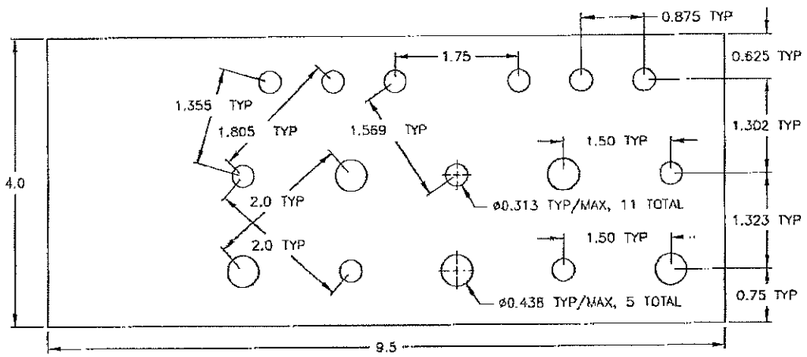

ITEM 10, MULLION END PLATE
5052-H32 ALUM
0.25 THICKNESS

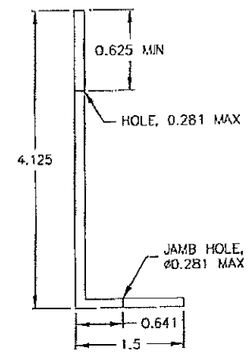

ITEM 11, MULLION ANGLE
6063-T5 ALUM
0.125 THICKNESS, CONTINUOUS

(NO IMAGE)

ITEM 12,
INSULATION
FIBERGLASS
1.5 THICK SHEET(S)

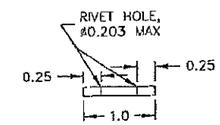

ITEM 13,
BLADE SUPPORT
6063-T5 ALUM
0.125 THICKNESS

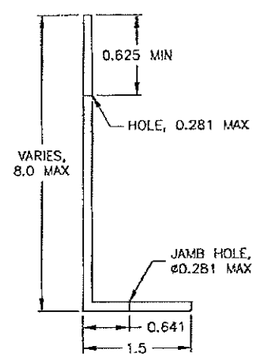

ITEM 14, (OPTIONAL) JAMB EXTENDED ANGLE
6063-T5 OR 5052-H32 ALUM
0.125 THICKNESS, CONTINUOUS

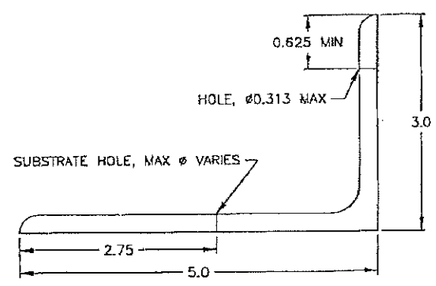

ITEM 15, (OPTIONAL) JAMB SECONDARY ANGLE
6061-T6 ALUM
0.25 THICKNESS, CONTINUOUS

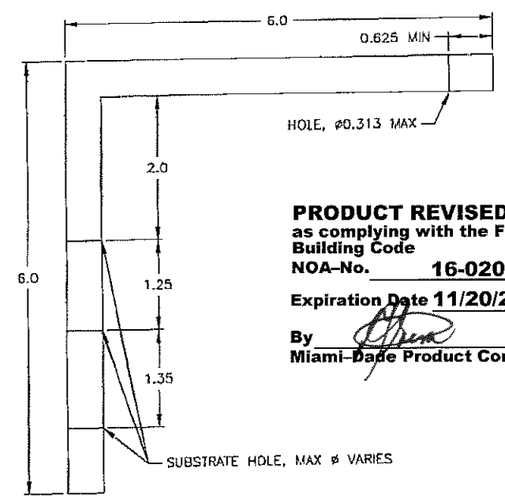

ITEM 16, (OPTIONAL) MULLION SECONDARY ANGLE
6061-T6 ALUM
0.50 THICKNESS, 19.5 LONG

PRODUCT REVISED
as complying with the Florida Building Code
NOA-No. 16-0201.18
Expiration Date 11/20/2019
By
Miami-Dade Product Control

DATE	8/8/14
DRAWN BY	MES
SCALE	
SHEET NO.	13 OF 15
CAD DRAWING NO.	T9106MD

AIRCOLITE
The look that works™
SCHOFIELD, WISCONSIN 54476
715-359-8171

TITLE
T9106MD
NOA DRAWINGS
PART PROFILES

Approved as complying with the Florida Building Code
Date 11/20/2014
NOA# 14-0402.08
Miami Dade Product Control
By

CHANDER R. NANGIA
LICENSE
No. 31938
STATE OF FLORIDA
PROFESSIONAL ENGINEER

AUG 20 2014

ITEM	DESCRIPTION	MATERIAL	INTERNAL ID #	NOTES
1	LOUVER HEAD, 0.125 FORMED SHEET	5052-H32 ALUM	100175	
2	LOUVER SILL, 0.125 FORMED SHEET	5052-H32 ALUM	100175	
3	LOUVER JAMB, 0.125 FORMED SHEET	5052-H32 ALUM	100175	
4	LOUVER BLADE, 0.081 FORMED SHEET	5052-H32 ALUM	100173	5.0 SPACING
5	BLADE SHEAR BLOCK, 0.125x0.7x4.5	5052-H32 ALUM	100175	
6	HEAD/BLADE SCREEN, 0.032 PERFORATED SHEET	3003-H14 ALUM	100163	
7	SILL SCREEN, 0.032 PERFORATED SHEET	3003-H14 ALUM	100163	
8	JAMB MOUNTING ANGLE, 0.187x1.5x1.5, CONTINUOUS	6061-T6 ALUM	130323	ALLOWED TO BE REPLACED BY ITEM 14 AND THEN ITEM 15 MUST ALSO BE USED
9	MULLION CHANNEL, 0.184x1.58x4, CONTINUOUS	6061-T6 ALUM	125749	
10	MULLION END PLATE, 0.25x4x9.5	5052-H32 ALUM	100177	
11	MULLION ANGLE, 0.125x1.5x4.125, CONTINUOUS	6063-T5 ALUM	125754	
12	INSULATION, FILLS CAVITIES, 1.5 SHEET(S)	FIBERGLASS	220138	
13	BLADE SUPPORT, 0.125x1.0, CONTINUOUS	6063-T5 ALUM	130370	USED ONLY IF SECTION WIDTH IS > 30.0
14	JAMB EXTENDED ANGLE, 0.125x1.5xVARIES, CONTINUOUS	6063-T5 ALUM OR 5052-H32 ALUM	125754 OR 100175	OPTIONAL, ALLOWED TO REPLACE ITEM 8 AND THEN ITEM 15 MUST ALSO BE USED
15	JAMB SECONDARY ANGLE, 0.25x3x5, CONTINUOUS	6005-T5 ALUM OR 6061-T6 ALUM	125990	OPTIONAL, USED ONLY IF ITEM 14 IS USED
16	MULLION SECONDARY ANGLE, 0.5x6x6, 19.5 LONG	6061-T6 ALUM	125747	OPTIONAL
-	-	-	-	
20	1/4-20x3/4 MIN. BOLT & FLANGE NUT	300 SERIES SS BOLT 300 SERIES SS NUT	415869 415575	USE ITEM 26 UNDER NUT IF A NON-FLANGED NUT IS USED
21	1/8 DIA. MIN. RIVET	5052 ALUM	415194	300/400 SERIES SS ALLOWED
22	#12-14x3/4 MIN. SCREW	300 SERIES SS	416110	
23	1/4-20x3/4 MIN. SCREW	COATED STEEL	416581	ANTI-CORROSIVE, 300/400 SERIES SS ALLOWED
24	1/4-20x1.25 MIN. BOLT & NYLON LOCK NUT	300 SERIES SS BOLT 300 SERIES SS NUT	416103 416036	NON-NYLON TYPE LOCK NUT ALLOWED
25	3/16 DIA. MIN. RIVET	5052 ALUM	415224	300/400 SERIES SS ALLOWED
26	0.049x5/8 O.D. MIN. WASHER	300 SERIES SS	415836	
27	1/4-20x1.25 MIN. BOLT & NUT	300 SERIES SS BOLT 300 SERIES SS NUT	416103 415575	
28	1/4-20x3/4 MIN. BOLT & NUT	300 SERIES SS BOLT 300 SERIES SS NUT	415869 415575	
-	-	-	-	
30	SUBSTRATE FASTENER, 1/4 ELCO AGGRE-GATOR	300 SERIES SS	NA	BY OTHERS, MINIMUM OF ONE TYPE REQUIRED, SEE ANCHOR CHART FOR ADDITIONAL DETAILS
	SUBSTRATE FASTENER, 3/8 POWERS WEDGE BOLT	410 SS		
	SUBSTRATE FASTENER, 1/4-20 BOLT & NUT	410 SS BOLT & ANY SERIES SS NUT		
	SUBSTRATE FASTENER, 1/4-20 SCREW	410 SS		
	SUBSTRATE FASTENER, 1/4 LAG SCREW	PLATED STEEL		
	SUBSTRATE FASTENER, 3/8 LAG SCREW	PLATED STEEL		
31	SUBSTRATE, GROUT FILLED CMU	GROUT FILLED CMU	NA	BY OTHERS, MINIMUM OF ONE TYPE REQUIRED, SEE ANCHOR CHART FOR ADDITIONAL DETAILS
	SUBSTRATE, CONCRETE	CONCRETE		
	SUBSTRATE, STEEL STUD	STEEL		
	SUBSTRATE, STRUCTURAL STEEL	STEEL		
	SUBSTRATE, WOOD	WOOD		
	SUBSTRATE, ALUMINUM	ALUMINUM		
32	SHIM, NON-COMPRESSIBLE	VARIOUS	NA	BY OTHERS, AS NEEDED
33	SEALANT & BACKER ROD	VARIOUS	NA	BY OTHERS, OPTIONAL

PRODUCT REVISED
as complying with the Florida Building Code
NOA-No. 16-0201.18
Expiration Date 11/20/2019
By
Miami-Dade Product Control

Approved as complying with the Florida Building Code
Date 11/20/2014
NOA# 14-0902.08
Miami Dade Product Control
By

CHANDER P. NANGIA
LICENSE
No. 21933
STATE OF FLORIDA
PROFESSIONAL ENGINEER

AUG 20 2014

DATE 8/8/14
DRAWN BY MES
SCALE
SHEET NO. 14 OF 15
CAD DRAWING NO. T9106MD

AIRCOLITE
The look that works!
SCHOFIELD, WISCONSIN 54476
715-359-6171

TITLE
T9106MD
NOA DRAWINGS
ITEM DESCRIPTIONS

ANCHOR CHART		ITEM 31, SUBSTRATE			ITEM 30, SUBSTRATE FASTENER									
ITEM	ITEM DESCRIPTION	TYPE	MAT'L (MIN)	THICKNESS (MIN)	TYPE	MAT'L	DIA.	LENGTH (MIN)	SPACING (MAX)	# REQUIRED (MIN)	EDGE (MIN)	EMBED. (MIN)	WASHER (MIN)	HOLE (MAX)
8	JAMB MOUNTNIG ANGLE	WOOD	G OF 0.42	3.0	LAG SCREW	STEEL	1/4	3	6.105	VARIES	1.5	2-13/16	NONE	5/16
							3/8		9.79					7/16
		STEEL STUD	A36	16 GA	BOLT/SCREW	410 SS	1/4-20	3/4	5.04	VARIES	0.6	0.0598	NONE	5/16
		STRUCTURAL STEEL		12 GA					6.105			0.1046		
		ALUMINUM	6063-T5	0.125	SCREW	410 SS	1/4-20	3/4	4.67	VARIES	0.5	1/8	NONE	9/32
					BOLT				6.105				19/32 AT NUT	
		CONCRETE	2,220 PSI	4.0	ELCO AGGRE-GATOR	300 SS	1/4	2	5.8	VARIES	1.5	1- 3/4	NONE	5/16
			2,500 PSI		POWERS WEDGE-BOLT	410 SS	3/8	2- 1/2	10.5		2.0	2- 1/8		7/16
		GROUT FILLED CMU	4,747 PSI	6 IN. BLOCK	ELCO AGGRE-GATOR	300 SS	1/4	2- 1/4	6.105	VARIES	2.0	2	NONE	5/16
			2,500 PSI		POWERS WEDGE-BOLT	410 SS	3/8	NOT	ALLOWED	NA	NA	NA	NA	NA
15	(OPTIONAL) JAMB SECONDARY ANGLE	CONCRETE	2,220 PSI	4.0	ELCO AGGRE-GATOR	300 SS	1/4	2	5.17	VARIES	2.0	1- 3/4	NONE	5/16
			2,500 PSI		POWERS WEDGE-BOLT	410 SS	3/8	2- 3/8	10.5			2- 1/8		7/16
		GROUT FILLED CMU	4,747 PSI	6 IN. BLOCK	ELCO AGGRE-GATOR	300 SS	1/4	2- 1/4	5.72	VARIES	2.0	2	NONE	5/16
			2,500 PSI		POWERS WEDGE-BOLT	410 SS	3/8	2- 3/4	9.91			2- 1/2		7/16
10	MULLION END PLATE	WOOD	G OF 0.42	3.0	LAG SCREW	STEEL	1/4	3	3.0	9	1.5	2- 1/2	NONE	5/16
							3/8			5				7/16
		STEEL STUD	A36	16 GA	BOLT/SCREW	410 SS	1/4-20	1	3.0	5	0.6	0.0598	NONE	5/16
		STRUCTURAL STEEL		12 GA								0.1046		
		ALUMINUM	6063-T5	0.125	BOLT/SCREW	410 SS	1/4-20	1	3.0	5	0.5	1/8	NONE	5/16
		CONCRETE	2,220 PSI	4.0	ELCO AGGRE-GATOR	300 SS	1/4	2	3.0	5	3.0	1- 3/8	NONE	5/16
			2,500 PSI		POWERS WEDGE-BOLT	410 SS	3/8	2- 3/4			2.25	2- 1/8		7/16
		GROUT FILLED CMU	4,747 PSI	6 IN. BLOCK	ELCO AGGRE-GATOR	300 SS	1/4	2- 1/2	3.0	5	4.0	2	NONE	5/16
			2,500 PSI		POWERS WEDGE-BOLT	410 SS	3/8	NOT	ALLOWED	NA	NA	NA	NA	NA
16	(OPTIONAL) MULLION SECONDARY ANGLE	CONCRETE	2,220 PSI	4.0	ELCO AGGRE-GATOR	300 SS	1/4	2- 1/4	3.0	12	2.5	1- 3/4	NONE	5/16
			2,500 PSI		POWERS WEDGE-BOLT	410 SS	3/8	2- 5/8	4.5	5	3.0	2- 1/8		7/16
		GROUT FILLED CMU	4,747 PSI	6 IN. BLOCK	ELCO AGGRE-GATOR	300 SS	1/4	2- 1/2	3.0	12	2.0	2	NONE	5/16
			2,500 PSI		POWERS WEDGE-BOLT	410 SS	3/8	3				2- 1/2		7/16

GENERAL NOTES:

1. IT SHALL BE THE RESPONSIBILITY OF THE PERMIT HOLDER TO VERIFY THE STRUCTURAL INTEGRITY OF THE EXISTING STRUCTURE TO SUPPORT THE LOADS IMPOSED BY THE LOUVER ASSEMBLY.

2. THIS LOUVER HAS BEEN DESIGNED AND TESTED IN ACCORDANCE WITH MIAMI-DADE COUNTY PROTOCOLS [AND QUALIFIED IN ACCORDANCE WITH THE CURRENT FLORIDA BUILDING CODE (FBC) AND TEST PROTOCOLS/STANDARDS]:
   TAS-201 (LARGE MISSILE IMPACT TEST)
   TAS-202 (UNIFORM STATIC WIND PRESSURE TEST)
   TAS-203 (UNIFORM CYCLIC WIND PRESSURE TEST)

3. THIS LOUVER HAS BEEN DESIGNED, TESTED, AND APPROVED TO WITHSTAND DESIGN PRESSURES OF UP TO AND INCLUDING +/-150 PSF.

4. THE LOUVER IS NOT DESIGNED TO PREVENT WIND DRIVEN RAIN FROM PENETRATING THE SPACE BEHIND THE LOUVER. THE LOUVER SHALL BE INSTALLED IN A LOCATION WHERE THE SPACE BEHIND THE LOUVER IS DESIGNED TO DRAIN WATER PENETRATING INTO THE ROOM OR THE ROOM WILL HOUSE WATER RESISTANT OR WATER PROOF EQUIPMENT, COMPONENTS, OR SUPPLIES.

5. THE MAXIMUM SINGLE SECTION SIZE IS 60 WIDE BY 120 HIGH. THE MAXIMUM OVERALL/ASSEMBLED SIZE IS UNLIMITED WIDE (BY USE OF MULTIPLE SECTIONS OF 60 WIDE OR LESS) BY 120 HIGH. SECTIONS/ASSEMBLIES MAY BE STACKED VERTICALLY PROVIDED THERE IS SUITABLE STRUCTURAL SUPPORT (DESIGNED AND INSTALLED BY OTHERS) TO SUPPORT ALL LOADS TRANSFERRED FROM THE LOUVER HEAD AND/OR SILL TO THE SUBSTRATE.

6. ALL WOOD SUBSTRATE SHALL HAVE SPECIFIC GRAVITY (G) ≥ 0.42.

7. ALL STEEL STUD SUBSTRATE SHALL BE ≥ 16 GA THICK, AND FY ≥ 36 KSI.

8. ALL STRUCTURAL STEEL SUBSTRATE SHALL BE ≥ 12 GA THICK, AND FY ≥ 36

PRODUCT REVISED
as complying with the Florida Building Code
NOA-No. 16-0201.18
Expiration Date 11/20/2019
By
Miami-Dade Product Control

9. ALL CONCRETE SUBSTRATE SHALL BE RATED ≥ 2.5 KSI OR ≥ 2.22 KSI AS REQUIRED BASED ON FASTENER TYPE USED.

10. CONCRETE MASONRY (CMU) SHALL BE ≥ THE FOLLOWING...

    FOR ELCO AGGRE-GATOR ø1/4 FASTENER: 6" WIDE, CMU CONFORMING TO ASTM C90 FILLED WITH 4,747 KSI RATED GROUT.

    FOR POWERS WEDGE-BOLT ø3/8 FASTENER: 6" WIDE, GRADE N, TYPE II, LIGHT/MEDIUM/NORMAL-WEIGHT CMU CONFORMING TO ASTM C90 FILLED WITH 2.5 KSI RATED GROUT.

11. ALL ALUMINUM SUBSTRATE SHALL BE ≥ 1/8 THICK, AND ALLOWABLE STRESSES ≥ THAT OF 6063-T5.

12. LOUVER CONSTRUCTION: HEAD, SILL, JAMBS, AND BLADES ARE FORMED SHEET. BLADE SPACING IS 5.0. BLADES ARE SECURED TO THE JAMBS WITH (3) SCREWS PER BLADE END. HEAD IS SECURED TO THE JAMB WITH (4) BOLTS PER HEAD END. SILL IS SECURED TO THE JAMB WITH (4) BOLTS PER SILL END. BLADE SUPPORT IS SECURED TO BLADES BY (2) RIVETS PER BLADE. SCREENS ARE SECURED TO THE HEAD WITH (2) RIVETS, TO THE BLADE WITH (2) RIVETS, AND TO THE SILL WITH (4) RIVETS. INSULATION IS SECURED WITHIN THE HEAD/BLADE/SILL CAVITY BY THE HEAD/BLADE/SILL SCREEN.

13. INSTALLER TO PROVIDE SEPARATION OF DISSIMILAR MATERIALS AS REQUIRED. SEE FL BLDG CODE SECTION 2003.8.4 FOR DETAILS.

14. ALL ALUMINUM, STAINLESS STEEL (SS), AND PLATED/COATED STEEL PARTS PROVIDED BY MANUFACTURER ARE INHERENTLY CORROSION RESISTANT OR HAVE A CORROSION RESISTANT COATING.

15. STEEL/STANLESS STEEL/ALUMINUM PARTS MAY BE MADE OUT OF ALTERNATE ALLOY THAT HAS EQUAL OR GREATER YIELD STRENGTH. PART DIMENSIONS ARE MINIMUMS UNLESS DEFINED OTHERWISE.

16. THE INTERNAL ID# SHOWN ON PAGE 14 IS FOR FACTORY USE AND TRACKING PURPOSES ONLY AND MAY BE UPDATED AT ANY TIME. ANY UPDATES WILL NOT ALTER THE ITEM AS DESCRIBED HEREIN.

DATE 8/8/14
DRAWN BY MES
SCALE
SHEET NO. 15 OF 15
CAD DRAWING NO. T9106MD

AIROLITE
The look that works™
SCHOFIELD, WISCONSIN 54476
715-359-6171

TITLE
T9106MD
NOA DRAWINGS
SUBSTRATE FASTENERS &
GENERAL NOTES

Approved as complying with the Florida Building Code
Date 11/20/2014
NOA# 14-0902.08
Miami Dade Product Control
By

CHANDER P. NANGIA
LICENSE
No. 21938
STATE OF FLORIDA
PROFESSIONAL ENGINEER

AUG 20 2014