MIAMI-DADE COUNTY
PRODUCT CONTROL SECTION
11805 SW 26 Street, Room 208
Miami, Florida 33175-2474
T (786) 315-2590 F (786) 315-2599
www.miamidade.gov/economy

DEPARTMENT OF REGULATORY AND ECONOMIC RESOURCES (RER)
BOARD AND CODE ADMINISTRATION DIVISION

NOTICE OF ACCEPTANCE (NOA)

Greenheck Fan Corporation
P.O. Box 410
Schofield, WI 54476

SCOPE:

This NOA is being issued under the applicable rules and regulations governing the use of construction materials. The documentation submitted has been reviewed and accepted by Miami-Dade County RER-Product Control Section to be used in Miami Dade County and other areas where allowed by the Authority Having Jurisdiction (AHJ).

This NOA shall not be valid after the expiration date stated below. The Miami-Dade County Product Control Section (In Miami Dade County) and/or the AHJ (in areas other than Miami Dade County) reserve the right to have this product or material tested for quality assurance purposes. If this product or material fails to perform in the accepted manner, the manufacturer will incur the expense of such testing and the AHJ may immediately revoke, modify, or suspend the use of such product or material within their jurisdiction. RER reserves the right to revoke this acceptance, if it is determined by Miami-Dade County Product Control Section that this product or material fails to meet the requirements of the applicable building code.

This product is approved as described herein, and has been designed to comply with the Florida Building Code, including the High Velocity Hurricane Zone.

DESCRIPTION: Series LBP, LDP and RSFP Aluminum Penthouse Louver Systems

APPROVAL DOCUMENT: Drawing No. **LPS1001-1009**, titled "LBP 10-30, LDP 60-120 and RSFP 90-200", sheets 1 through 9 of 9, dated 07/14/2014, prepared by Greenheck Fan Corporation, signed and sealed by L. David Rice, P.E., bearing the Miami-Dade County Product Control revision stamp with the Notice of Acceptance number and expiration date by the Miami-Dade County Product Control Section.

MISSILE IMPACT RATING: Large and Small Missile Impact Resistant

LABELING: Each unit shall bear a permanent label with the manufacturer's name or logo, city, state, model/series, and following statement: "Miami-Dade County Product Control Approved", unless otherwise noted herein.

RENEWAL of this NOA shall be considered after a renewal application has been filed and there has been no change in the applicable building code negatively affecting the performance of this product.

TERMINATION of this NOA will occur after the expiration date or if there has been a revision or change in the materials, use, and/or manufacture of the product or process. Misuse of this NOA as an endorsement of any product, for sales, advertising or any other purposes shall automatically terminate this NOA. Failure to comply with any section of this NOA shall be cause for termination and removal of NOA.

ADVERTISEMENT: The NOA number preceded by the words Miami-Dade County, Florida, and followed by the expiration date may be displayed in advertising literature. If any portion of the NOA is displayed, then it shall be done in its entirety.

INSPECTION: A copy of this entire NOA shall be provided to the user by the manufacturer or its distributors and shall be available for inspection at the job site at the request of the Building Official.

This NOA **revises NOA # 14-0514.07** and consists of this page 1 and evidence page E-1, as well as approval document mentioned above.

The submitted documentation was reviewed by **Carlos M. Utrera, P.E.**

MIAMI-DADE COUNTY APPROVED

06/08/2016

NOA No 16-0209.04
Expiration Date: September 25, 2019
Approval Date: June 16, 2016

NOTICE OF ACCEPTANCE: EVIDENCE SUBMITTED

A. DRAWINGS ***"Submitted under NOA # 14-0514.07"***

1. Drawing No. **LPS1001-1009**, titled "LBP 10-30, LDP 60-120 and RSFP 90-200", sheets 1 through 9 of 9, dated 07/14/2014, prepared by Greenheck Fan Corporation, signed and sealed by L. David Rice, P.E.

B. TESTS ***"Submitted under NOA # 14-0514.07"***

1. Test reports on 1) Uniform Static Air Pressure Test, Loading per FBC TAS 202-94
   2) Large Missile Impact Test per FBC, TAS 201-94
   3) Cyclic Wind Pressure Loading per FBC, TAS 203-94
   4) Tensile testing per ASTM E8

   along with marked-up drawings and installation diagram of Series/Model LBP/LDP louvered enclosure, prepared by Architectural Testing, Inc., Test Report No. **D3080.02-602-18**, dated 04/18/2014, signed and sealed by Shawn G. Collins, P.E.
2. Test reports on 1) Uniform Static Air Pressure Test, Loading per FBC TAS 202-94
   2) Large Missile Impact Test per FBC, TAS 201-94
   3) Cyclic Wind Pressure Loading per FBC, TAS 203-94
   4) Tensile testing per ASTM E8

   along with marked-up drawings and installation diagram of Series/Model RSFP louvered enclosure, prepared by Architectural Testing, Inc., Test Report No. **D3080.01-602-18**, dated 04/18/2014, signed and sealed by Shawn G. Collins, P.E.

C. CALCULATIONS ***"Submitted under NOA # 14-0514.07"***

1. Louver calculations prepared by Rice Engineering, dated 05/02/2014, signed and sealed by L. David Rice, P.E.

D. QUALITY ASSURANCE

1. Miami-Dade Department of Regulatory and Economic Resources (RER)

E. MATERIAL CERTIFICATIONS

1. None.

F. STATEMENTS

1. Statement letter of code conformance to the 5th edition (2014) FBC issued by Rice Engineering, dated 02/04/2016, signed and sealed by L. David Rice, P.E.

   "Submitted under NOA # 14-0514.07"
2. Statement letter of code conformance to 2010 FBC, issued by Rice Engineering, dated 04/15/2014, signed and sealed by L. David Rice, P.E.
3. Statement letter of no financial interest issued by Rice Engineering, dated 05/01/2014, signed and sealed by L. David Rice, P.E.

06/08/2016

Carlos M. Utrera, P.E.
Product Control Examiner
NOA No 16-0209.04
Expiration Date: September 25, 2019
Approval Date: June 16, 2016

FASTENER TABLE																					
UNIT SIZ	QTY	FASTENER TYPE "A"	QTY	FASTENER TYPE "B"	QTY	FASTENER TYPE "C"	QTY	FASTENER TYPE "D"	QTY	FASTENER TYPE "E"	DESCR	FASTENER TYPE "F"	QTY	FASTENER TYPE "G"	QTY	FASTENER TYPE "H"	QTY	FASTENER TYPE "I"
LBP-10	4	STUD,WELD,.312-18X0.75,ZP	38	SCR,SMS,UHW,#12X.625,SS,410,AB	8	BOLT,HSF,.25-20X.75,ZP,GR5	20	SCR,MS,PTH,.25-20X.625,SS,18-8	4	RVT,SHLDR,FH,.313X.559,SS,430	2	BOLT,HSF,.25-20X.75,ZP,GR5	3	SCR,TCS,IHWH,.313-18X.625,HECH ZP&WAX	6	BOLT,HSF,.313-18X0.75,ZP,GR5	8	SCR,TEK,IHWH,#12X.75,ZP
LBP-14	6	STUD,WELD,.312-18X0.75,ZP	38	SCR,SMS,UHW,#12X.625,SS,410,AB	8	BOLT,HSF,.25-20X.75,ZP,GR5	22	SCR,MS,PTH,.25-20X.625,SS,18-8	4	RVT,SHLDR,FH,.313X.559,SS,430	2	BOLT,HSF,.25-20X.75,ZP,GR5	N/A	N/A		N/A	6	SCR,TEK,IHWH,#12X.75,ZP
LBP-18	6	STUD,WELD,.312-18X0.75,ZP	60	SCR,SMS,UHW,#12X.625,SS,410,AB	8	BOLT,HSF,.25-20X.75,ZP,GR5	22	SCR,MS,PTH,.25-20X.625,SS,18-8	4	RVT,SHLDR,FH,.313X.559,SS,430	2	BOLT,HSF,.25-20X.75,ZP,GR5	N/A	N/A		N/A	8	SCR,TEK,IHWH,#12X.75,ZP
LBP-21	6	STUD,WELD,.312-18X0.75,ZP	60	SCR,SMS,UHW,#12X.625,SS,410,AB	8	BOLT,HSF,.25-20X.75,ZP,GR5	22	SCR,MS,PTH,.25-20X.625,SS,18-8	4	RVT,SHLDR,FH,.313X.559,SS,430	2	BOLT,HSF,.25-20X.75,ZP,GR5	N/A	N/A		N/A	8	SCR,TEK,IHWH,#12X.75,ZP
LBP-24	8	STUD,WELD,.312-18X0.75,ZP	60	SCR,SMS,UHW,#12X.625,SS,410,AB	8	BOLT,HSF,.25-20X.75,ZP,GR5	22	SCR,MS,PTH,.25-20X.625,SS,18-8	4	RVT,SHLDR,FH,.313X.559,SS,430	2	BOLT,HSF,.25-20X.75,ZP,GR5	N/A	N/A		N/A	8	SCR,TEK,IHWH,#12X.75,ZP
LBP-30	10	STUD,WELD,.312-18X0.75,ZP	88	SCR,SMS,UHW,#12X.625,SS,410,AB	12	BOLT,HSF,.25-20X.75,ZP,GR5	22	SCR,MS,PTH,.25-20X.625,SS,18-8	4	RVT,SHLDR,FH,.313X.559,SS,430	2	BOLT,HSF,.25-20X.75,ZP,GR5	N/A	N/A		N/A	8	SCR,TEK,IHWH,#12X.75,ZP

LOUVERED BELT DRIVE PENTHOUSE - EXHAUST							
SIZE	DIM "A"	DIM "B"	DIM "C"	DIM "D"	DIM "E"	DIM "F"	WEIGHT
LBP-10	38-1/2	28	17	22	14	1-3/4	99
LBP-14	40	32	17	26	16	1-3/4	116
LBP-18	46	36	24-1/2	30	19	1-3/4	179
LBP-21	46	36	24-1/2	30	19	1-3/4	191
LBP-24	49-1/2	40	23-1/2	34	20	1-3/4	239
LBP-30	58	46	26-1/2	40	23	1-3/4	318

NOTE:
ALL DIMENSIONS ARE IN INCHES
WEIGHT SHOWN IS LARGEST CATALOGED OPEN DRIP PROOF MOTOR

PRODUCT REVISED
as complying with the Florida Building Code
NOA-No. 16-0209.04
Expiration Date 09/25/2019
By
Miami-Dade Product Control

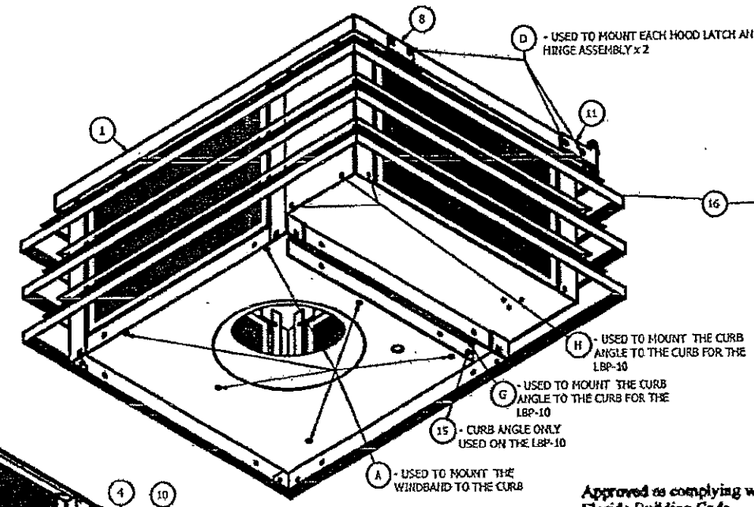

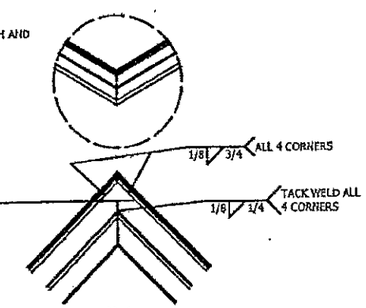

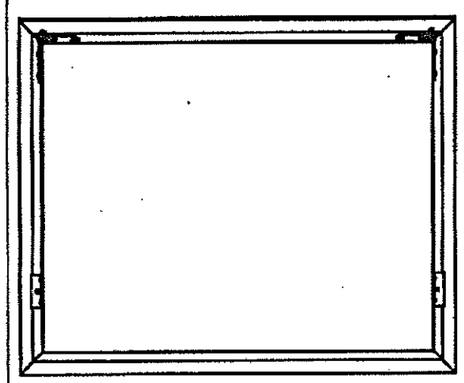

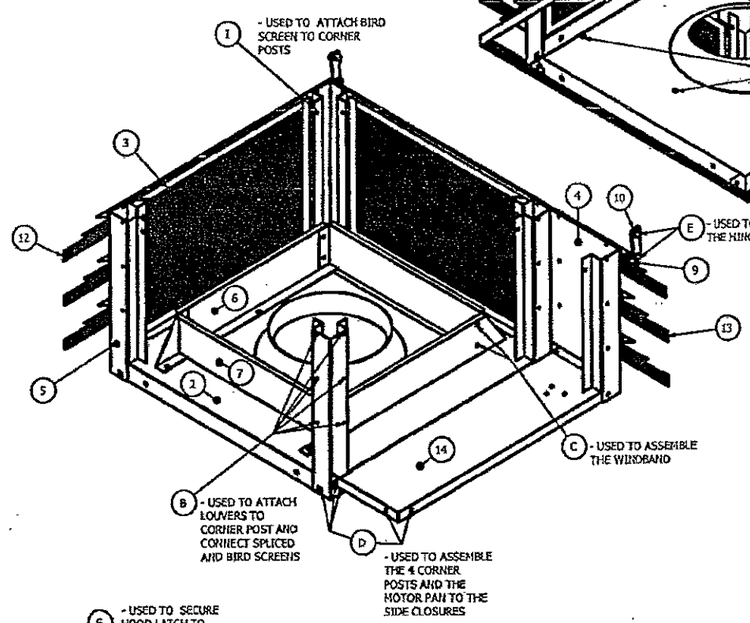

Approved as complying with the Florida Building Code
Date 09/25/2014
NOA# 14-0514.07
Miami Dade Product Control
By

PARTS LIST			
ITEM #	DESCRIPTION	ITEM	DESCRIPTION
1	HOOD COVER	9	LOUVER BRKT
2	CURB	10	PIVOT BRKT
3	BIRD SCREEN	11	HOOD BRKT
4	SIDE CLOSURE	12	END LOUVER
5	CURB CORNER POST	13	SIDE LOUVER
6	END, WDBAND	14	MOTOR PAN
7	SD, WDBAND	15	CURB ANGLE
8	HOOD LATCH	16	LOUVER GUSSET

Notes:

1. MODEL LBP HAS BEEN SUCCESSFULLY TESTED IN ACCORDANCE WITH MIAMI DADE TEST PROTOCOL TAS-201(LARGE MISSILE IMPACT), TAS-202 (STATIC LOADING), AND TAS-203 (CYCLIC WIND LOADING).

2. ROOF STRUCTURE MUST BE DESIGNED TO WITHSTAND THE WEIGHT AND LOADING TRANSMITTED BY ROOF TOP FANS. FASTENERS SHALL BE AS SPECIFIED AND INSTALLED AS DETAILED.

3. DESIGN, TESTING, AND INSTALLATION CONFORMS TO FLORIDA BUILDING CODE.

4. DESIGN PRESSURE = +/- 150 PSF. LARGE MISSLE IMPACT RESISTANT.

5. TESTED FOR AREAS INCLUDING HIGH VELOCITY HURRICANE ZONES.

6. THESE FANS HAVE NOT BEEN TESTED FOR WIND PENETRATION ACCORDING TO FLORIDA BUILDING CODE, TAS 100(A) WIND DRIVEN RAIN TEST. THEY CANNOT BE INSTALLED WITHIN THE RIDGE AREA FBC 1523.6.5.2.13'.

7. THIS APPROVAL IS FOR THE STRUCTURAL CAPACITY AND IMPACT RATING OF THE EXTERIOR HOUSING ONLY, IT DOES NOT INCLUDE ANY INTERIOR MECHANISM OR ELECTRICAL PART.

8. CARBON STEEL IN CONTACT WITH ALUMINUM COMPLIES WITH FLORIDA BUILDING CODE SECTION 2003.8.4.2

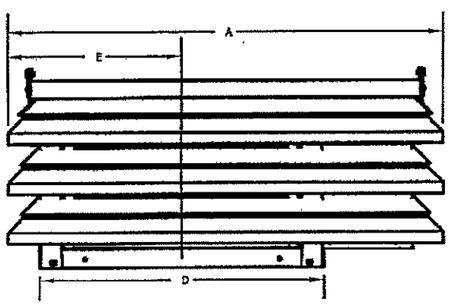

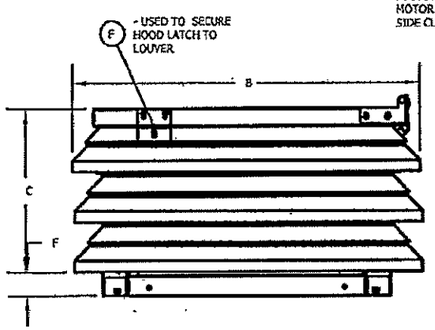

RICE ENGINEERING
105 School Creek Trail
Luxemburg, WI 54217
Phone 920.845 1042
Fax 920.845 1048
www.rice-inc.com

Florida Firm No: F-01000005061
Certificate of Authorization: #9090
L. David Rice
Registration No: 50923

L. DAVID RICE LICENSE No. 50923 STATE OF FLORIDA PROFESSIONAL ENGINEER

JUL 22 2014

PAINT	PART NO.	MAT'L	GAUGE	DESCRIPTION

GREENHECK

TITLE: LBP-10 THRU 30
SHEET 1 OF 9

DRAWN BY ----	ECO ----
DATE 07/14/14	ENG. REF. ----
SUPERSEDES ----	----
SCALE 1/13.4	----
CAD DRAWING NO. LPS1001	B

NOTE:
LBP-10 AND 14 HAVE A TALL HOOD OPTION. USED WITH LARGER MOTORS

PRODUCT REVISED
as complying with the Florida Building Code
NOA-No. 16-0209.04
Expiration Date 09/25/2019
By
Miami-Dade Product Control

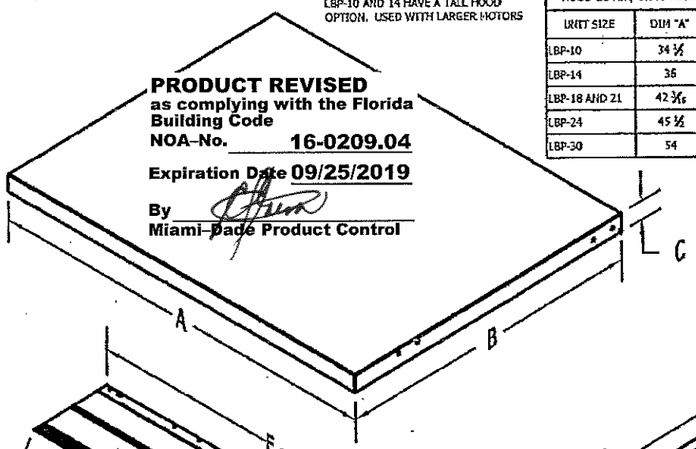

HOOD COVER/ 0.063 ALUM 1100-H12/ QTY - 1 PER UNIT			
UNIT SIZE	DIM "A"	DIM "B"	DIM "C"
LBP-10	34 1/2	24	1 9/16 or 2 9/16
LBP-14	36	28	1 9/16 or 2 9/16
LBP-18 AND 21	42 3/16	31 15/16	1 9/16
LBP-24	45 1/2	36	1 9/16
LBP-30	54	42	1 9/16

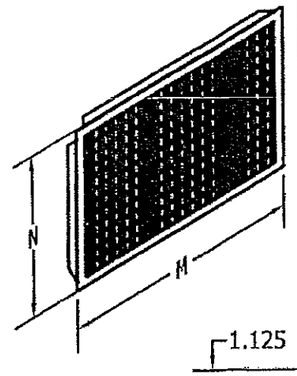

BIRD SCREEN/ 18GA GALV OR 0.063 ALUM 1100-H14			
UNIT SIZE	DIM "M"	DIM "N"	QTY PER UNIT
LBP-10	17 5/8	14 3/32	2
LBP-10	28 9/16	14 3/32	2
LBP-14	21 5/8	15 5/32	4
LBP-18 AND 21	25 5/8	23 3/16	4
LBP-24	29 3/4	21 3/4	4
LBP-30	34 3/4	12 1/2	8

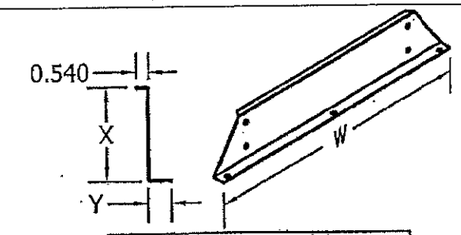

END WDBAND/ 0.063 ALUM 1100-H12/ QTY - 2 PER UNIT			
UNIT SIZE	DIM "W"	DIM "X"	DIM "Y"
LBP-10	19 1/4	3 1/8	3/4
LBP-14	23 1/4	4 1/8	1
LBP-18	27 1/4	4 1/8	1
LBP-21	27 1/4	6 1/16	1
LBP-24	31 1/4	6 7/8	1
LBP-30	37 1/2	8 5/8	1

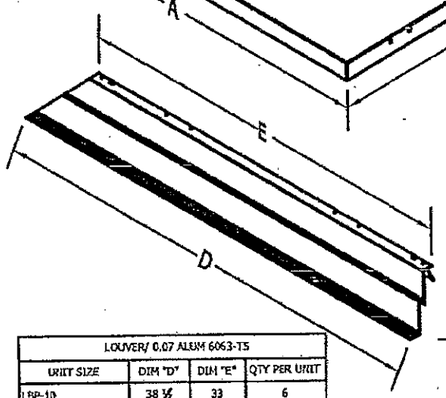

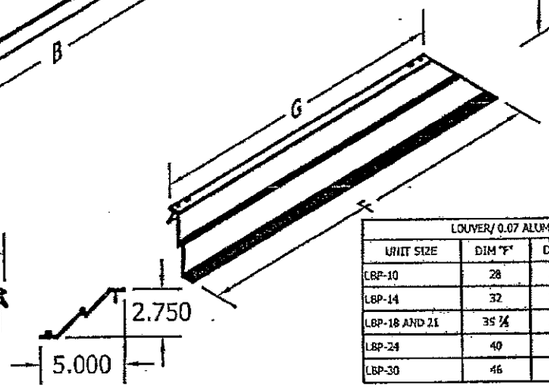

LOUVER/ 0.07 ALUM 6063-T5			
UNIT SIZE	DIM "D"	DIM "E"	QTY PER UNIT
LBP-10	38 1/2	33	6
LBP-14	40	34 1/2	6
LBP-18 AND 21	46 1/8	40 5/8	10
LBP-24	49 1/2	44	10
LBP-30	58	52 1/2	12

LOUVER/ 0.07 ALUM 6063-T5			
UNIT SIZE	DIM "F"	DIM "G"	QTY PER UNIT
LBP-10	28	22 1/2	6
LBP-14	32	26 1/2	6
LBP-18 AND 21	35 1/8	30 3/4	10
LBP-24	40	34 1/2	10
LBP-30	46	40 1/2	12

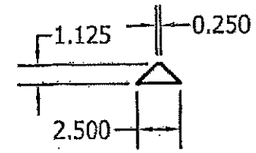

LOUVER GUSSET/ 0.63 ALUM 1100-H12	
UNIT SIZE	QTY PER UNIT
LBP-10	12
LBP-14	12
LBP-18 AND 21	20
LBP-24	20
LBP-30	24

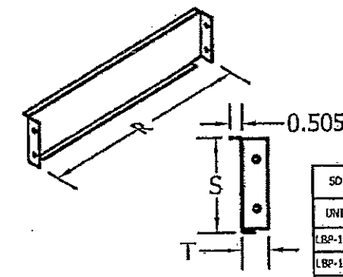

SD WDBAND/ 0.063 ALUM 1100-H12/ QTY - 2 PER UNIT			
UNIT SIZE	DIM "R"	DIM "S"	DIM "T"
LBP-10	14	3 3/8	1 5/32
LBP-14	18 1/8	4 1/8	1 3/16
LBP-18	22 1/8	4 5/8	1 3/16
LBP-21	25 1/8	6 1/16	1 3/16
LBP-24	26 1/8	6 7/8	1 7/16
LBP-30	34 1/8	8 5/8	1 11/16

Approved as complying with the Florida Building Code
Date 09/25/2014
NOA# 14-0514.07
Miami Dade Product Control
By

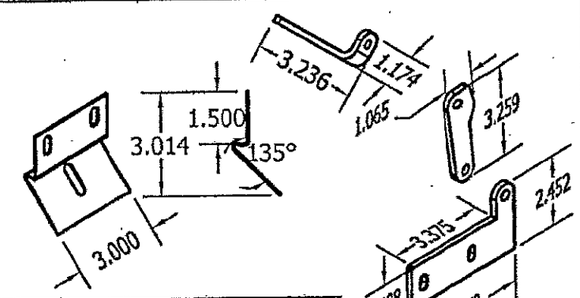

CURB ANGLE/ 12 GA GALV	
UNIT SIZE	QTY PER UNIT
LBP-10	1

CURB/ 0.063 ALUM 1100-H12/QTY 1 PER UNIT		
UNIT SIZE	DIM "H"	DIM "I"
LBP-10	32 13/16	22 1/8
LBP-14	26 1/8	26 1/8
LBP-18 AND 21	30 1/8	30 1/8
LBP-24	34 1/8	34 1/8
LBP-30	40 1/8	40 1/8

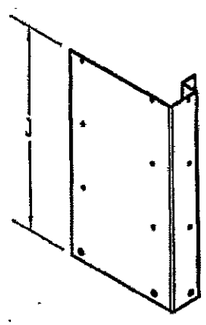

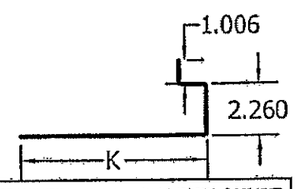

SIDE CLOSURES/ 0.063 ALUM 1100-H12/ QTY - 2 PER UNIT		
UNIT SIZE	DIM "J"	DIM "K"
LBP-14	14 1/2	8 1/4
LBP-18 AND 20	23	10 3/4
LBP-24	22	9 1/8
LBP-30	25	12 1/8

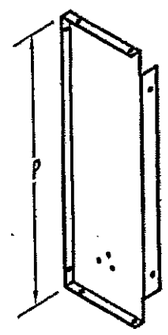

MOTOR PAN/ 0.063 ALUM 1100-H12/ QTY - 1 PER UNIT		
UNIT SIZE	DIM "P"	DIM "Q"
LBP-14	26 3/8	10 3/16
LBP-18 AND 21	30 3/16	10 1/8
LBP-24	34 3/8	9 5/8
LBP-30	40 3/8	12 3/16

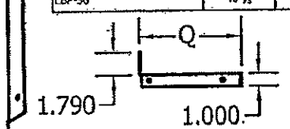

COMMON COMPONENTS FOR ALL SIZES		
COMPONENT	MATERIAL	QTY PER UNIT
HOOD LATCH	18 GA S.S. 304-2B	2
LOUVER BRKT	0.190 ALUM 1100-H14	2
PIVOT BRKT	0.190 ALUM 1100-H14	2
HOOD BRKT	0.190 ALUM 1100-H14	2

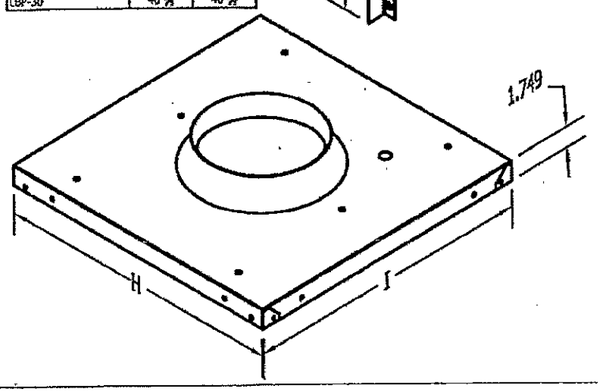

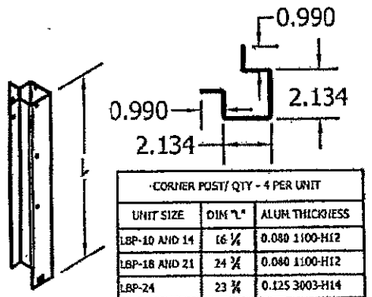

CORNER POST/ QTY - 4 PER UNIT		
UNIT SIZE	DIM "L"	ALUM THICKNESS
LBP-10 AND 14	16 1/4	0.080 1100-H12
LBP-18 AND 21	24 3/4	0.080 1100-H12
LBP-24	23 3/4	0.125 3003-H14
LBP-30	26 3/4	0.125 3003-H14

RICE
ENGINEERING
105 School Creek Trail
Luxemburg, WI 54217
Phone: 920.845 1042
Fax: 920.845.1048
www.rice-inc.com

Florida Firm No: F-01000005061
Certificate of Authorization: #9090
L. David Rice
Registration No: 50923

L. DAVID RICE
LICENSE
No. 50923
STATE OF FLORIDA
PROFESSIONAL ENGINEER

PAINT	PART NO.	MAT'L	GAUGE	DESCRIPTION

GREENHECK

DRAWN BY ----	ECO ----
DATE 07/14/14	ENG. REF. ----
SUPERSEDES ----	----
SCALE 1/10.8	----
CAD DRAWING NO. LPS1002	B

TITLE
LBP-10 THRU 30
SHEET 2 OF 9

JUL 22 2014

REVISION	SYM

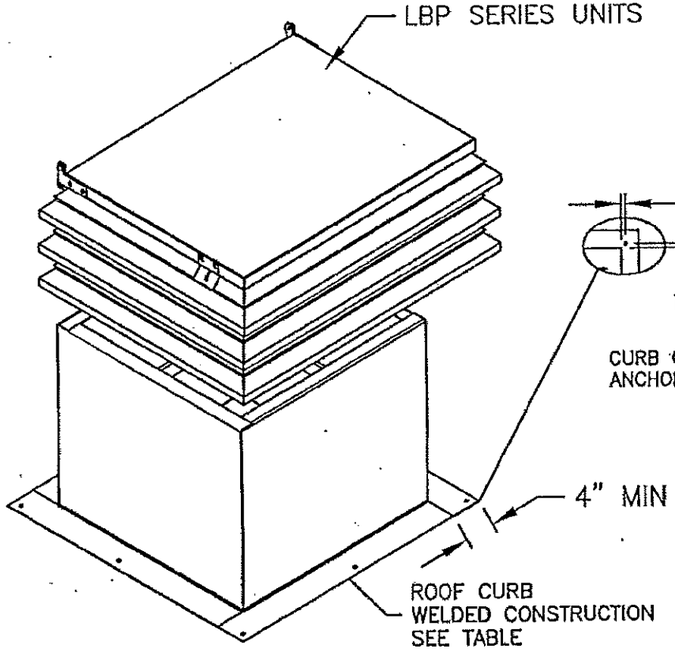

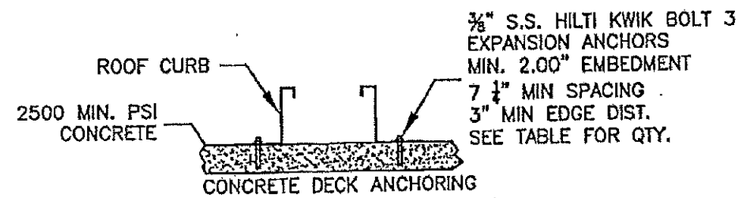

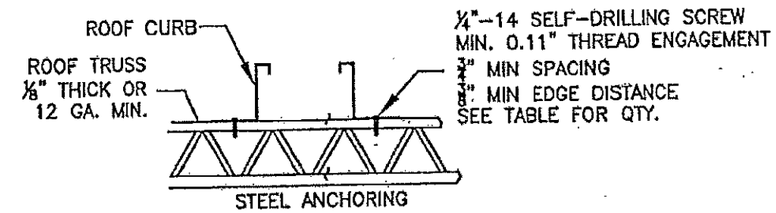

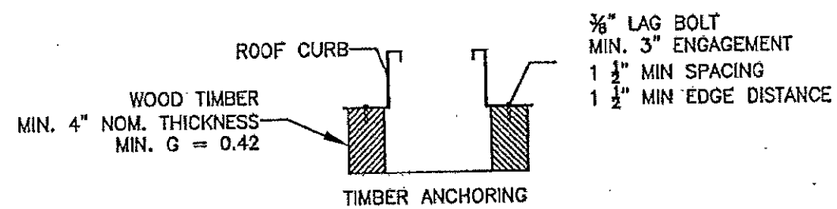

PRODUCT REVISED
as complying with the Florida Building Code
NOA-No. 16-0209.04
Expiration Date 09/25/2019
By
Miami-Dade Product Control

Approved as complying with the Florida Building Code
Date 09/25/2014
NOA# 14-0514.07
Miami Dade Product Control
By

FAN TO CURB MOUNTING

UNIT SIZE	FASTENERS PER SIDE
LBP-10, 14, 18, 21, 24	2
LBP-30	3

¼ INCH FASTENER MINIMUM 5/16 INCH RECOMMENDED. SELF-DRILLING SCREW, GALVANIZED A307 OR BETTER, MINIMUM LENGTH OF 1.5"

ROOF CURB REQUIRMENTS

UNIT SIZE	MAX CURB HEIGHT	MIN CURB GAGE (STEEL)
LBP-10, 14	42"	18
LBP-18, 21, 24	30"	18
LBP-30	24"	12

CURB TO DECK MOUNTING

UNIT SIZE	CONCRETE ANCHORING NO. OF FASTENERS PER SIDE	STEEL DECK ANCHORING NO. OF FASTENERS PER SIDE	TIMBER ANCHORING NO. OF FASTENERS PER SIDE
LBP-10	4	8	5
LBP-14	4	8	5
LBP-18, 21, 24	4	6	4
LBP-30	3	5	4

RICE ENGINEERING
105 School Creek Trail
Luxemburg, WI 54217
Phone 920.845.1042
Fax 920.845.1048
www.rice-inc.com

Florida Firm No. F-01000005061
Certificate of Authorization: #9090
L David Rice
Registration No: 50923

L. DAVID RICE LICENSE No. 50923 STATE OF FLORIDA PROFESSIONAL ENGINEER

PAINT	PART NO.	MAT'L	GAUGE	DESCRIPTION

GREENHECK

TITLE: LBP-10 THRU 30
SHEET 3 OF 9

DRAWN BY ----	ECO ----
DATE 07/14/14	ENG. REF. ----
SUPERSEDES ----	----
SCALE 1/16	----
CAD DRAWING NO. LPS1003	B

JUL 22 2014

FASTENER TABLE												
UNIT SIZE	QTY	FASTENER TYPE "A"	QTY	FASTENER TYPE "B"	QTY	FASTENER TYPE "C"	QTY	FASTENER TYPE "D"	QTY	FASTENER TYPE "E"	QTY	FASTENER TYPE "F"
LDP-60 THRU 75	4	STUD,WELD,.312-18X0.75,ZP	32	SCR,SMS,UHW,#12X.625,SS,410,AB	8	BOLT,HSF,.25-20X.75,ZP,GR5	18	SCR,MS,PTH,.25-20X.625,SS,18-8	4	RVT,SHLDR,FH,.313X.559,SS,430	1	BOLT,HSF,.25-20X.75,ZP,GR5
LDP-80 THRU 95	4	STUD,WELD,.312-18X0.75,ZP	40	SCR,SMS,UHW,#12X.625,SS,410,AB	8	BOLT,HSF,.25-20X.75,ZP,GR5	18	SCR,MS,PTH,.25-20X.625,SS,18-8	4	RVT,SHLDR,FH,.313X.559,SS,430	1	BOLT,HSF,.25-20X.75,ZP,GR5
LDP-100/120	4	STUD,WELD,.312-18X0.75,ZP	40	SCR,SMS,UHW,#12X.625,SS,410,AB	8	BOLT,HSF,.25-20X.75,ZP,GR5	18	SCR,MS,PTH,.25-20X.625,SS,18-8	4	RVT,SHLDR,FH,.313X.559,SS,430	1	BOLT,HSF,.25-20X.75,ZP,GR5

PARTS LIST			
ITEM #	DESCRIPTION	ITEM #	DESCRIPTION
1	HOOD COVER	7	SD, WDBAND
2	CURB	8	HOOD LATCH
3	BIRD SCREEN	9	LOUVER BRKT
4	LOUVER	10	PIVOT BRKT
5	CURB CORNER POST	11	HOOD BRKT
6	END, WDBAND	12	LOUVER GUSSET

LOUVERED DIRECT DRIVE PENTHOUSE - EXHAUST							
SIZE	DIM "A"	DIM "B"	DIM "C"	DIM "D"	DIM "E"	DIM "F"	WEIGHT
LDP-60	23	23	13 ½	17	11 ½	1 ¾	49
LDP-65	23	23	13 ½	17	11 ½	1 ¾	49
LDP-70	23	23	13 ½	17	11 ½	1 ¾	49
LDP-75	23	23	13 ½	17	11 ½	1 ¾	49
LDP-80	25	25	16 ½	19	12 ½	1 ¾	63
LDP-85	25	25	16 ½	19	12 ½	1 ¾	63
LDP-90	25	25	16 ½	19	12 ½	1 ¾	63
LDP-95	25	25	16 ½	19	12 ½	1 ¾	63
LDP-100	28	28	18 ½	22	14	1 ¾	82
LDP-120	28	28	18 ½	22	14	1 ¾	82

NOTE:
ALL DIMENSIONS ARE IN INCHES
WEIGHT SHOWN IS LARGEST CATALOGED OPEN DRIP PROOF MOTOR

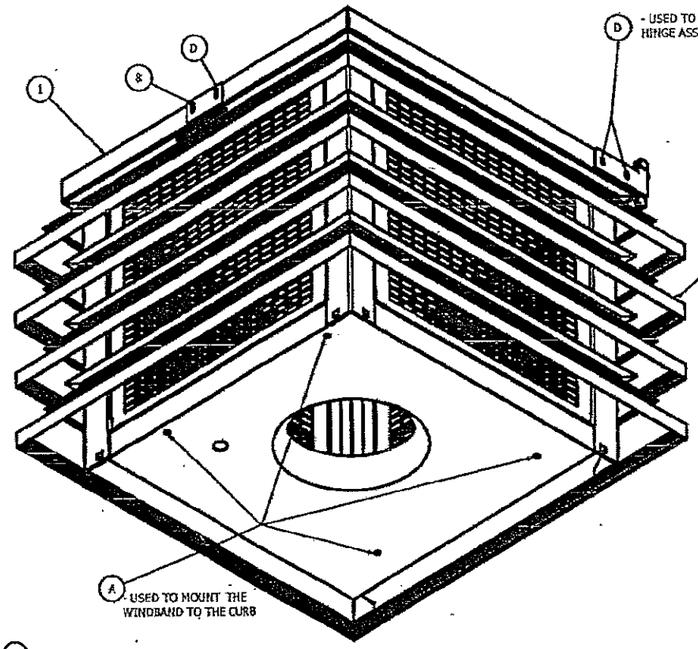

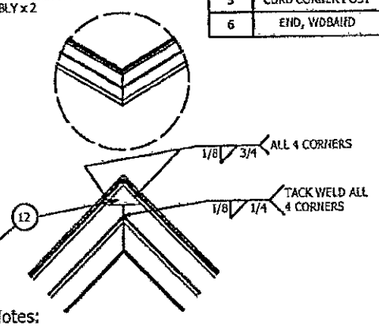

Notes:

1. MODEL LDP HAS BEEN SUCCESSFULLY TESTED IN ACCORDANCE WITH MIAMI DADE TEST PROTOCOL TAS-201(LARGE MISSILE IMPACT), TAS-202 (STATIC LOADING), AND TAS-203 (CYCLIC WIND LOADING).

2. ROOF STRUCTURE MUST BE DESIGNED TO WITHSTAND THE WEIGHT AND LOADING TRANSMITTED BY ROOF TOP FANS. FASTENERS SHALL BE AS SPECIFIED AND INSTALLED AS DETAILED.

3. DESIGN, TESTING, AND INSTALLATION CONFORMS TO FLORIDA BUILDING CODE.

4. DESIGN PRESSURE = +/- 150 PSF. LARGE MISSLE IMPACT RESISTANT.

5. TESTED FOR AREAS INCLUDING HIGH VELOCITY HURRICANE ZONES.

6. THESE FANS HAVE NOT BEEN TESTED FOR WIND PENETRATION ACCORDING TO FLORIDA BUILDING CODE, TAS 100(A) WIND DRIVEN RAIN TEST. THEY CANNOT BE INSTALLED WITHIN THE RIDGE AREA FBC 1523.6.5.2.13'.

7. THIS APPROVAL IS FOR THE STRUCTURAL CAPACITY AND IMPACT RATING OF THE EXTERIOR HOUSING ONLY, IT DOES NOT INCLUDE ANY INTERIOR MECHANISM OR ELECTRICAL PART.

8. CARBON STEEL IN CONTACT WITH ALUMINUM COMPLIES WITH FLORIDA BUILDING CODE SECTION 2003.8.4.2

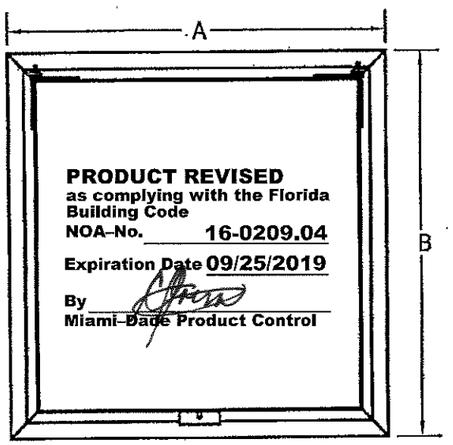

Approved as complying with the Florida Building Code
Date 09/25/2014
NOA# 14-0514.07
Miami Dade Product Control
By

PRODUCT REVISED
as complying with the Florida Building Code
NOA-No. 16-0209.04
Expiration Date 09/25/2019
By
Miami-Dade Product Control

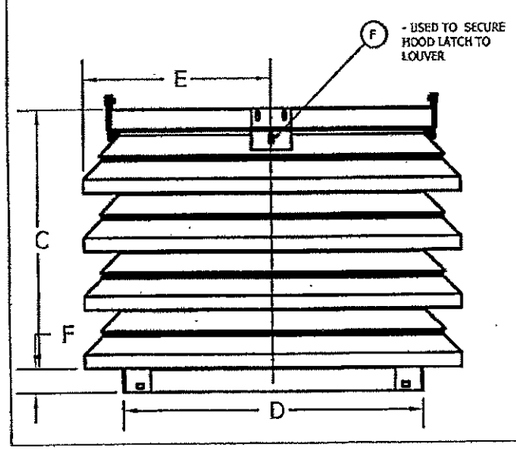

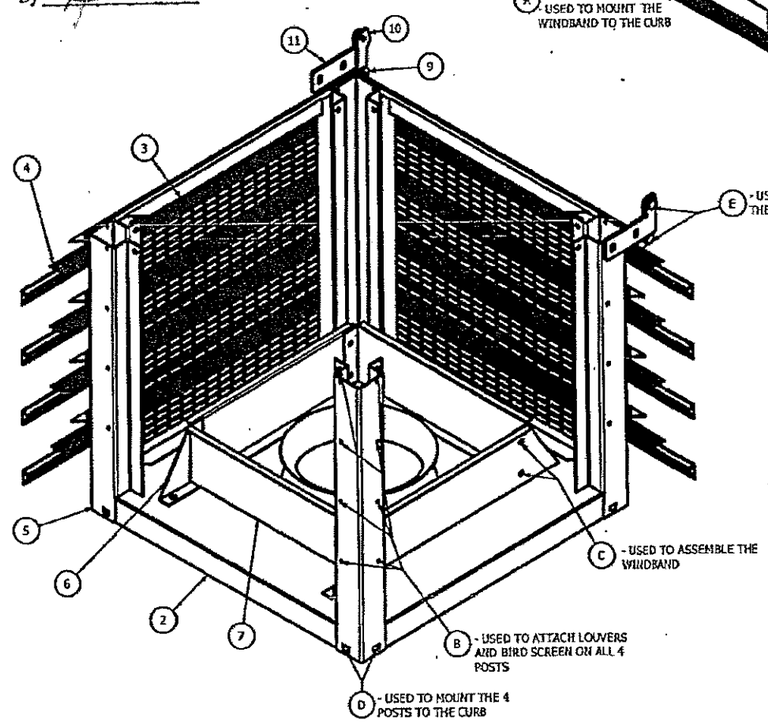

RICE
ENGINEERING
105 School Creek Trail
Luxemburg, WI 54217
Phone 920.845 1042
Fax 920.845 1048
www.rice-inc.com

Florida Firm No. F-01000005061
Certificate of Authorization: #9090
L David Rice
Registration No: 50923

L. DAVID RICE
LICENSE
No. 50923
STATE OF FLORIDA
PROFESSIONAL ENGINEER

PAINT	PART NO.	MAT'L	GAUGE	DESCRIPTION

GREENHECK

DRAWN BY ----	ECO ----
DATE 07/14/14	END REF. ----
SUPERSEDES ----	----
SCALE 1/10.8	----
CAD DRAWING NO. LPS1004	B

TITLE
LDP-60 THRU 120
SHEET 4 OF 9

JUL 22 2014

PRODUCT REVISED
as complying with the Florida Building Code
NOA-No. 16-0209.04
Expiration Date 09/25/2019
By
Miami-Dade Product Control

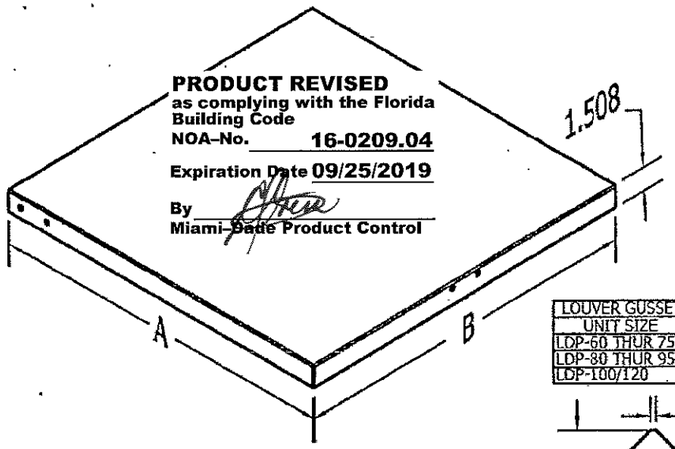

LOUVER/ 0.07 ALUM 6063-T5			
UNIT SIZE	DIM "G"	DIM "H"	QTY PER UNIT
LDP-60 THRU 75	17 ½	23	12
LDP-80 THUR 95	19 ½	25	16
LDP-100/120	22 ½	28	16

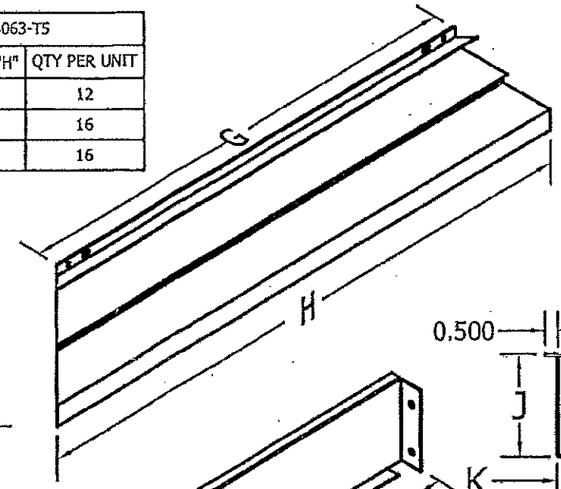

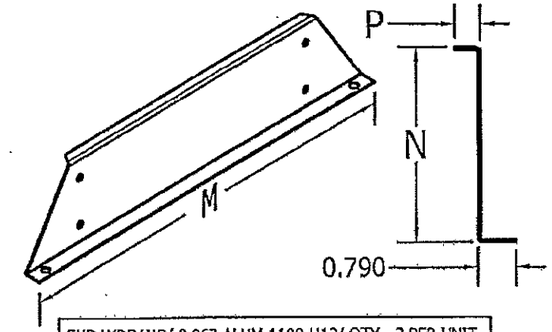

LOUVER GUSSET/ 0.63 ALUM 1100-H12	
UNIT SIZE	QTY PER
LDP-60 THUR 75	12
LDP-80 THUR 95	16
LDP-100/120	16

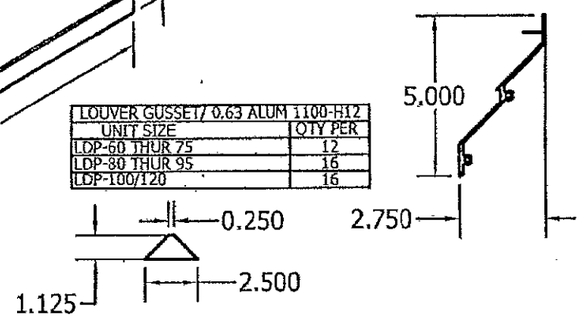

END WDBAND/ 0.063 ALUM 1100-H12/ QTY - 2 PER UNIT			
UNIT SIZE	DIM "M"	DIM "N"	DIM "P"
LDP-60 THRU 75	14	2	⅜
LDP-80 THRU 95	16 ½	4	½
LDP-100/200	19	4	½

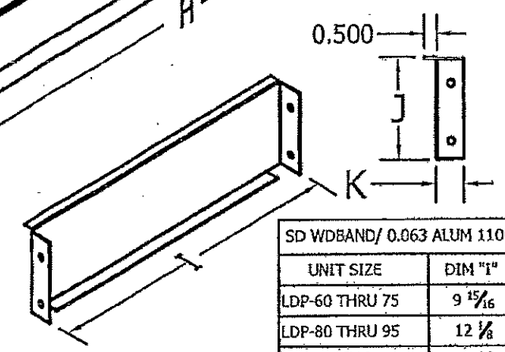

HOOD COVER/ 0.063 ALUM 1100-H12/ QTY - 1 PER UNIT		
UNIT SIZE	DIM "A"	DIM "B"
LDP-60 THRU 75	19	19
LDP-80 THRU 95	21	21
LDP-100/120	24	24

BIRD SCREEN/ 18GA GALV / QTY - 4 PER UNIT		
UNIT SIZE	DIM "C"	DIM "D"
LDP-60 THRU 75	13 ⅛	12 ⅜
LDP-80 THRU 95	15 ⅜	14 ⅝
LDP-100/200	18 ⅛	17 ⅞

SD WDBAND/ 0.063 ALUM 1100-H12/ QTY - 2 PER UNIT			
UNIT SIZE	DIM "I"	DIM "J"	DIM "K"
LDP-60 THRU 75	9 15/16	2 1/8	1 3/16
LDP-80 THRU 95	12 ⅛	4 1/8	1 ⅛
LDP-100/120	14 ⅛	4 1/8	1 ⅛

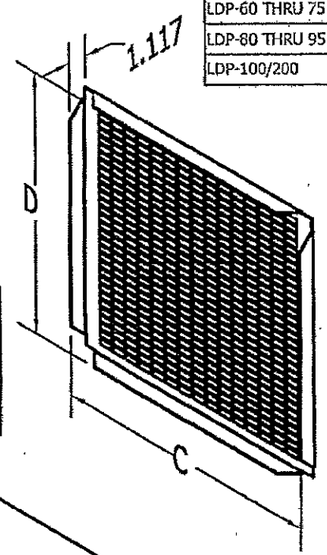

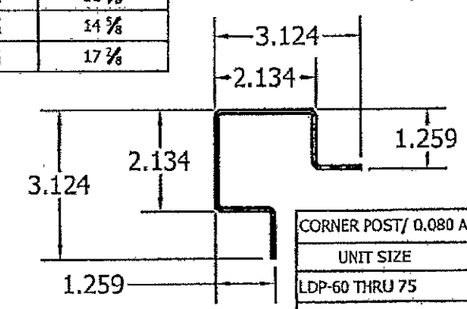

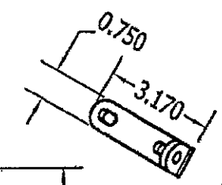

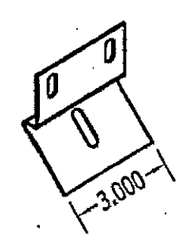

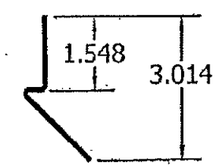

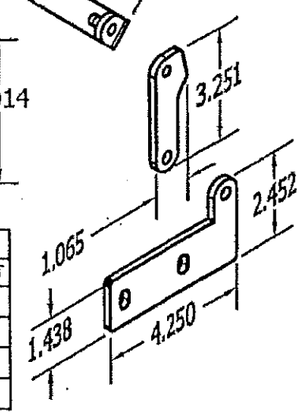

CORNER POST/ 0.080 ALUM 1100-H12/ QTY - 4 PER UNIT	
UNIT SIZE	DIM "L"
LDP-60 THRU 75	14 ¼
LDP-80 THRU 95	17 ¼
LDP-100/120	19 ½

COMMON COMPONENTS FOR ALL SIZES		
COMPONENT	MATERIAL	QTY PER UNIT
HOOD LATCH	18 GA S.S. 304-2B	1
LOUVER BRKT	0.190 ALUM 1100-H14	2
PIVOT BRKT	0.190 ALUM 1100-H14	2
HOOD BRKT	0.190 ALUM 1100-H14	2

Approved as complying with the Florida Building Code
Date 09/25/2014
NOA# 14-0314.07
Miami Dade Product Control
By

CURB/ 0.063 ALUM 1100-H12/ QTY - 1 PER UNIT		
UNIT SIZE	DIM "E"	DIM "F"
LDP-60 THUR 75	17	17
LDP-80 THRU 95	19	19
LDP-100/120	22	22

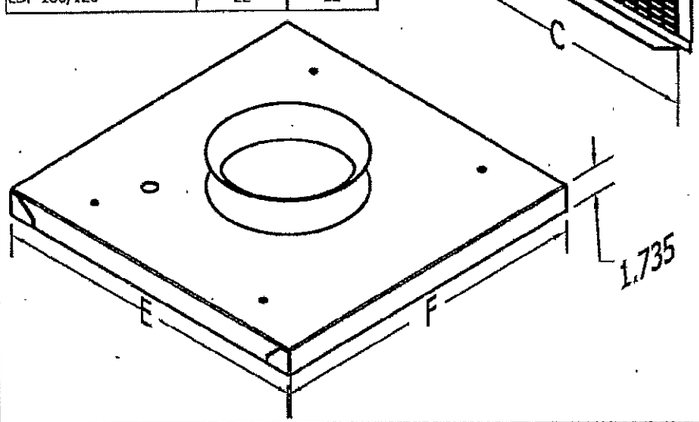

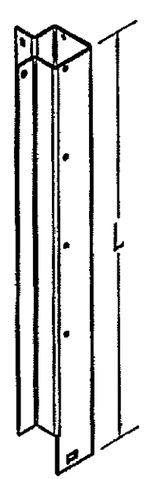

RICE ENGINEERING
105 School Creek Trail
Luxemburg, WI 54217
Phone: 920.845 1042
Fax: 920.845 1048
www.rice-inc.com

Florida Firm No: F-01000005061
Certificate of Authorization: #9090
L David Rice
Registration No: 50923

L. DAVID RICE LICENSE No. 50923 STATE OF FLORIDA PROFESSIONAL ENGINEER

JUL 22 2014

PAINT	PART NO.	MAT'L	GAUGE	DESCRIPTION

GREENHECK

TITLE: LDP-60 THRU 120
SHEET 5 OF 9

DRAWN BY: -----	ECO: -----
DATE: 07/14/14	ENG. REF.: -----
SUPERSEDES: -----	-----
SCALE: 1/3.5	-----
CAD DRAWING NO.: LPS1005	B

REVISION	SYM

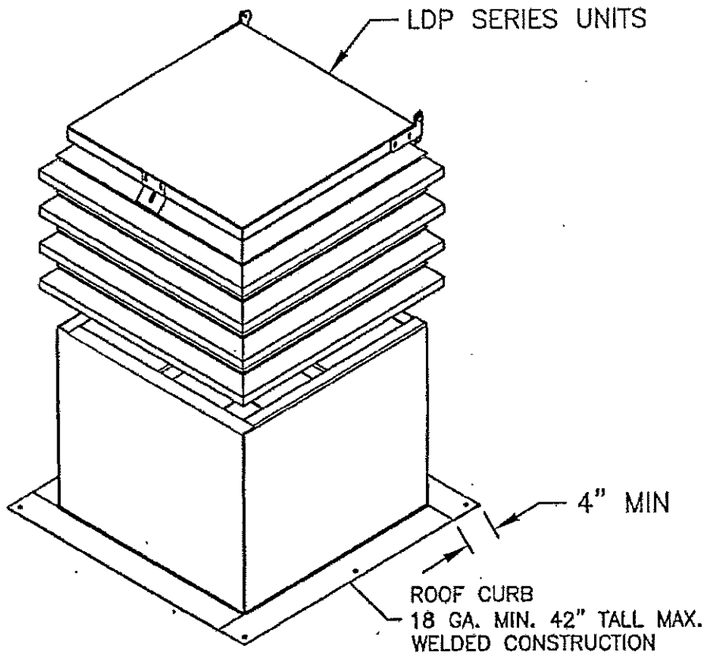

FAN TO CURB MOUNTING

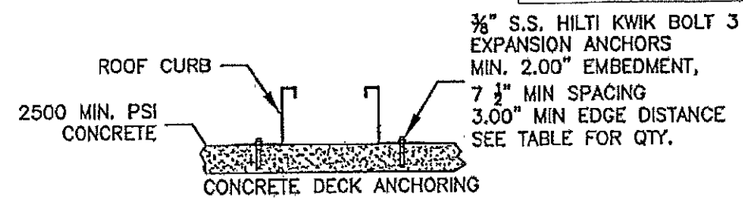

CONCRETE DECK ANCHORING

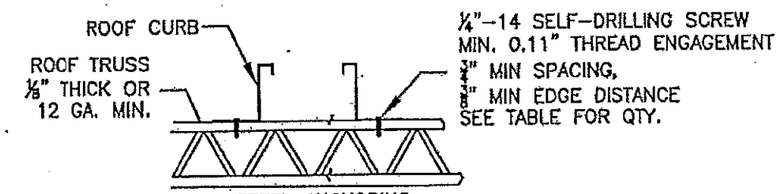

STEEL ANCHORING

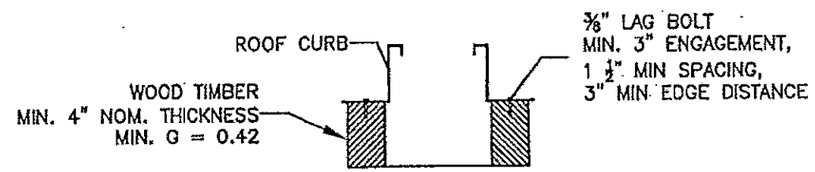

TIMBER ANCHORING

PRODUCT REVISED
as complying with the Florida Building Code
NOA-No. 16-0209.04
Expiration Date 09/25/2019
By
Miami-Dade Product Control

UNIT SIZE	FASTENERS PER SIDE
LDP-60, 65, 70, 75, 80, 85, 90, 95, 100, 120	2

¼ INCH FASTENER MINIMUM 5/16 INCH RECOMMENDED. SELF-DRILLING SCREW, GALVANIZED A307 OR BETTER, MINIMUM LENGTH OF 1.5"

CURB TO DECK MOUNTING

UNIT SIZE	CONCRETE ANCHORING NO. OF FASTENERS PER SIDE	STEEL DECK ANCHORING NO. OF FASTENERS PER SIDE	TIMBER ANCHORING NO. OF FASTENERS PER SIDE
LDP-60, 65, 70, 75	4	6	4
LDP-80, 85, 90, 95, 100, 120	4	7	4

Approved as complying with the Florida Building Code
Date 09/25/2014
NOA# 14-0514.07
Miami Dade Product Control
By

RICE ENGINEERING
105 School Creek Trail
Luxemburg, WI 54217
Phone 920.845.1042
Fax: 920.845.1048
www.rice-inc.com

Florida Firm No: F-01000005061
Certificate of Authorization: #9090
L. David Rice
Registration No: 50923

L. DAVID RICE
LICENSE
No. 50923
STATE OF FLORIDA
PROFESSIONAL ENGINEER

JUL 22 2014

PAINT	PART NO.	MAT'L	GAUGE	DESCRIPTION

GREENHECK

TITLE: LDP-60 THRU 120
SHEET 6 OF 9

DRAWN BY ----	ECO ----
DATE 07/14/14	ENG REF. ----
SUPERSEDES ----	----
SCALE 1/16	----
CAD DRAWING NO. LPS1006	B

FASTENER TABLE												
UNIT SIZE	QTY	FASTENER TYPE "A"	QTY	FASTENER TYPE "B"	QTY	FASTENER TYPE "C"	QTY	FASTENER TYPE "D"	QTY	FASTENER TYPE "E"	QTY	FASTENER TYPE "F"
RSFP-90	64	SCR,SMS,IHWH,#12X.625,ZP,A,NEOPWSHR	24	SCR,SMS,UHW,#12X.625,SS,410,AB	8	BOLT,HSF,.313-18X0.75,ZP,GR5	10	SCR,MS,PTH,.25-20X.625,SS,18-8	4	RVT,SHLDR,FH,.313X.559,SS,430	1	BOLT,HSF,.25-20X.75,ZP,GR5
RSFP-100	64	SCR,SMS,IHWH,#12X.625,ZP,A,NEOPWSHR	24	SCR,SMS,UHW,#12X.625,SS,410,AB	8	BOLT,HSF,.313-18X0.75,ZP,GR5	12	SCR,MS,PTH,.25-20X.625,SS,18-8	4	RVT,SHLDR,FH,.313X.559,SS,430	2	BOLT,HSF,.25-20X.75,ZP,GR5
RSFP-120	64	SCR,SMS,IHWH,#12X.625,ZP,A,NEOPWSHR	32	SCR,SMS,UHW,#12X.625,SS,410,AB	8	BOLT,HSF,.313-18X0.75,ZP,GR5	12	SCR,MS,PTH,.25-20X.625,SS,18-8	4	RVT,SHLDR,FH,.313X.559,SS,430	2	BOLT,HSF,.25-20X.75,ZP,GR5
RSFP-150	60	SCR,TEK,HWH,#12X.75,ZP,NEOP	60	SCR,SMS,UHW,#12X.625,SS,410,AB	12	BOLT,HSF,.313-18X0.75,ZP,GR5	12	SCR,MS,PTH,.25-20X.625,SS,18-8	4	RVT,SHLDR,FH,.313X.559,SS,430	2	BOLT,HSF,.25-20X.75,ZP,GR5
RSFP-180	60	SCR,TEK,HWH,#12X.75,ZP,NEOP	60	SCR,SMS,UHW,#12X.625,SS,410,AB	12	BOLT,HSF,.313-18X0.75,ZP,GR5	12	SCR,MS,PTH,.25-20X.625,SS,18-8	8	RVT,SHLDR,FH,.313X.559,SS,430	10	BOLT,HSF,.25-20X.75,ZP,GR5
RSFP-200	44	SCR,TEK,HWH,#12X.75,ZP,NEOP	128	SCR,SMS,UHW,#12X.625,SS,410,AB	12	BOLT,HSF,.313-18X0.75,ZP,GR5	12	SCR,MS,PTH,.25-20X.625,SS,18-8	8	RVT,SHLDR,FH,.313X.559,SS,430	10	BOLT,HSF,.25-20X.75,ZP,GR5

PARTS LIST			
ITEM #	DESCRIPTION	ITEM #	DESCRIPTION
1	HOOD COVER	8	BLOWER SUPPORT PHL
2	LOUVER	9	BLOWER CLOSURE PHL
3	SIDE PANEL	10	HOOD LATCH
4	CORNER POST	11	HOOD BRKT
5	CENTER POST	12	LOUVER BRKT
6	RETAINER ANGLE	13	PIVOT BRKT
7	EXPANDED ALUM FILTER	14	LOUVER GUSSET

NOTE:
IF 1" FILTERS ARE USED A FILTER RETAINER ANGLE IS REQUIRED. THE ADDED FASTERNERS ARE AS FOLLOWS:
RSFP-90 THRU 120 - (16) SCR,SMS,IHWH,#12X.625,ZP,A,NEOPWSHR
RSFP-150 THRU 200 - (32) SCR,SMS,IHWH,#12X.625,ZP,A,NEOPWSHR

LOUVERED BELT DRIVE PENTHOUSE - SUPPLY						
SIZE	DIM "A"	DIM "B"	DIM "C"	DIM "D"	DIM "E"	WEIGHT
RSFP-90	31-7/8	31-7/8	25-3/8	26	2-1/2	126
RSFP-100	35-7/8	35-7/8	25-3/8	30	2-1/2	146
RSFP-120	39-7/8	39-7/8	29-3/8	34	2-1/2	180
RSFP-150	45-7/8	45-7/8	33-3/8	40	2-1/2	250
RSFP-180	51-7/8	51-7/8	35-3/8	46	2-1/2	285
RSFP-200	58-3/16	58-3/16	40-3/8	52	2-1/2	431

NOTE:
ALL DIMENSIONS ARE IN INCHES
WEIGHT SHOWN IS LARGEST CATALOGED OPEN DRIP PROOF MOTOR

PRODUCT REVISED
as complying with the Florida Building Code
NOA-No. 16-0209.04
Expiration Date 09/25/2019
By
Miami-Dade Product Control

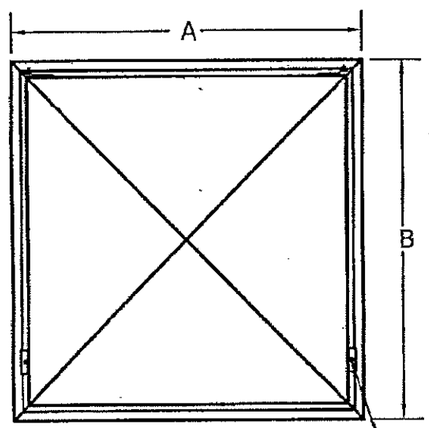

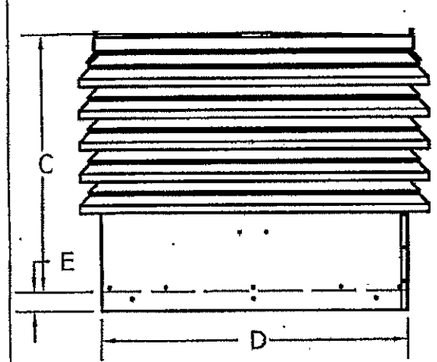

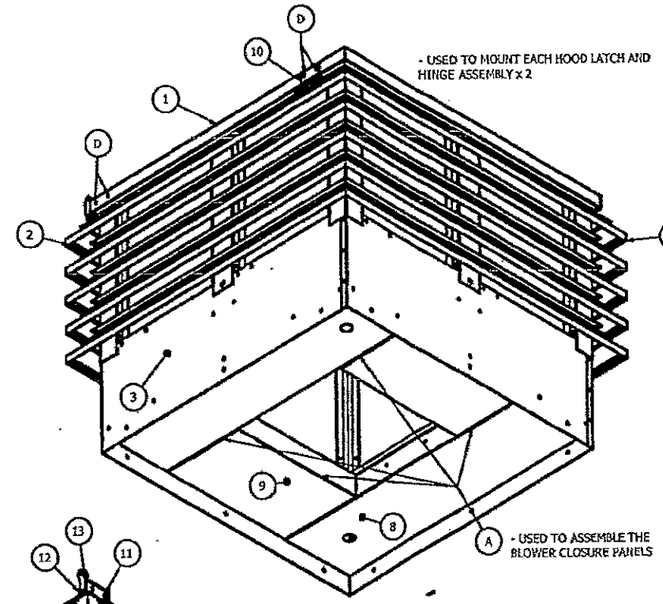

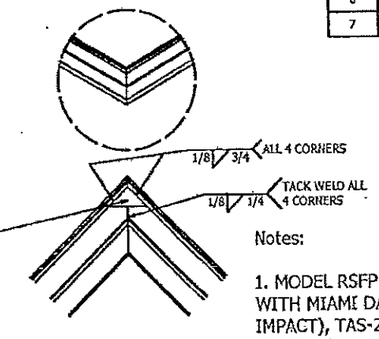

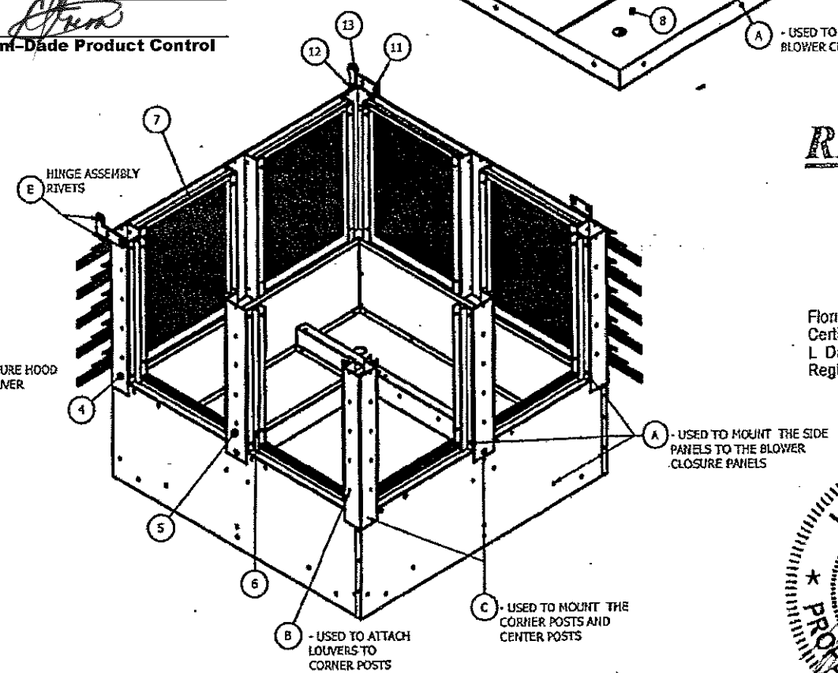

RICE
ENGINEERING
105 School Creek Trail
Luxemburg, WI 54217
Phone: 920.845 1042
Fax: 920.845 1048
www.rice-inc.com

Florida Firm No: F-01000005061
Certificate of Authorization: #9090
L David Rice
Registration No: 50923

L. DAVID RICE
LICENSE
No. 50923
STATE OF FLORIDA
PROFESSIONAL ENGINEER

JUL 22 2014

Approved as complying with the Florida Building Code
Date 09/25/2014
NOA# 14-0514.07
Miami Dade Product Control
By

Notes:

1. MODEL RSFP HAS BEEN SUCCESSFULLY TESTED IN ACCORDANCE WITH MIAMI DADE TEST PROTOCOL TAS-201(LARGE MISSILE IMPACT), TAS-202 (STATIC LOADING), AND TAS-203 (CYCLIC WIND LOADING).

2. ROOF STRUCTURE MUST BE DESIGNED TO WITHSTAND THE WEIGHT AND LOADING TRANSMITTED BY ROOF TOP FANS. FASTENERS SHALL BE AS SPECIFIED AND INSTALLED AS DETAILED.

3. DESIGN, TESTING, AND INSTALLATION CONFORMS TO FLORIDA BUILDING CODE.

4. DESIGN PRESSURE = +/- 150 PSF. LARGE MISSLE IMPACT RESISTANT.

5. TESTED FOR AREAS INCLUDING HIGH VELOCITY HURRICANE ZONES.

6. THESE FANS HAVE NOT BEEN TESTED FOR WIND PENETRATION ACCORDING TO FLORIDA BUILDING CODE, TAS 100(A) WIND DRIVEN RAIN TEST. THEY CANNOT BE INSTALLED WITHIN THE RIDGE AREA FBC 1523.6.5.2.13'.

7. THIS APPROVAL IS FOR THE STRUCTURAL CAPACITY AND IMPACT RATING OF THE EXTERIOR HOUSING ONLY, IT DOES NOT INCLUDE ANY INTERIOR MECHANISM OR ELECTRICAL PART.

8. CARBON STEEL IN CONTACT WITH ALUMINUM COMPLIES WITH FLORIDA BUILDING CODE SECTION 2003.8.4.2

PAINT	PART NO.	MAT'L	GAUGE	DESCRIPTION

GREENHECK

TITLE: RSFP-90 THRU 200
SHEET 7 OF 9

DRAWN BY	-----
ECO	-----
DATE	7/14/14
ENG. REF.	-----
SUPERSEDES	-----

SCALE	1/19

CAD DRAWING NO.	LPS1007
	B

PRODUCT REVISED
as complying with the Florida Building Code
NOA–No. 16-0209.04
Expiration Date 09/25/2019
By
Miami–Dade Product Control

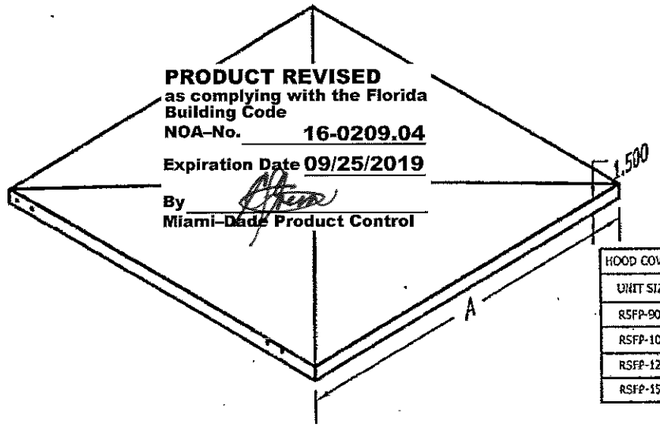

HOOD COVER PART "A"/ 0.063 ALUM 1100-H12		
UNIT SIZE	DIM "J"	DIM "K"
RSFP-180	48	24
RSFP-200	54	27

HOOD COVER/ 0.063 ALUM 1100-H12	
UNIT SIZE	DIM "A"
RSFP-90	28
RSFP-100	32
RSFP-120	36
RSFP-150	42

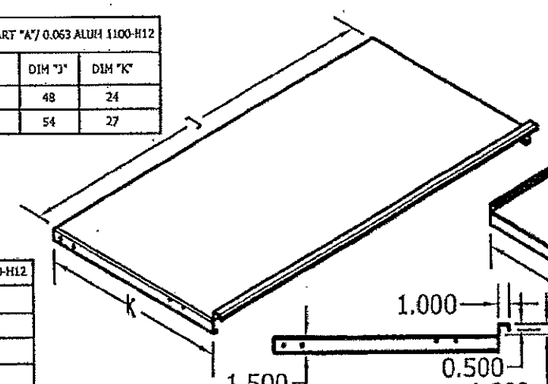

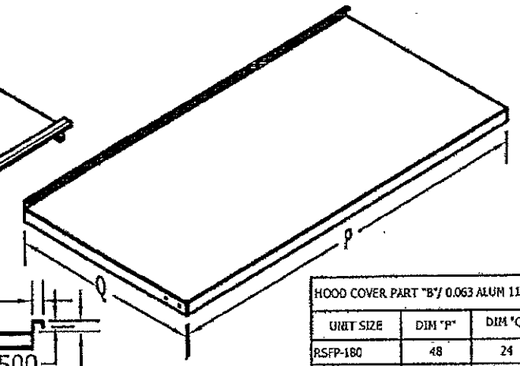

HOOD COVER PART "B"/ 0.063 ALUM 1100-H12		
UNIT SIZE	DIM "P"	DIM "Q"
RSFP-180	48	24
RSFP-200	54	27

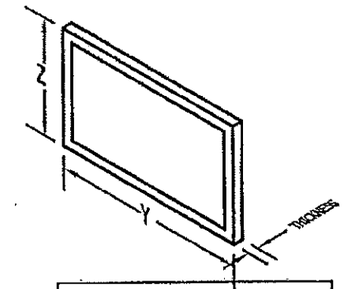

ALUM FRAME FILTER/ EXPANDED ALUM PAD				
UNIT SIZE	DIM "Y"	DIM "Z"	DIM "C"	QTY
RSFP-90	19 5/8	11 5/8	1 OR 2	4
RSFP-100	24 5/8	15 5/8	1 OR 2	4
RSFP-120	19 5/8	15 5/8	1 OR 2	4
RSFP-150	19 5/8	15 5/8	1 OR 2	8
RSFP-180	19 5/8	19 5/8	1 OR 2	4
RSFP-180	19 5/8	15 5/8	1 OR 2	4
RSFP-200	24 5/8	19 5/8	1 OR 2	8

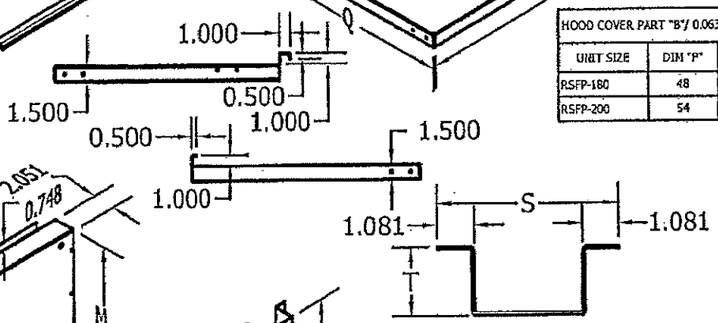

LOUVER/ 0.07 ALUM 6063-T5			
UNIT SIZE	DIM "B"	DIM "C"	QTY PER UNIT
RSFP-90	31 7/8	26 3/8	12
RSFP-100	35 7/8	30 7/8	12
RSFP-120	39 7/8	34 3/8	16
RSFP-150	45 7/8	40 3/8	20
RSFP-180	51 7/8	46 3/8	20
RSFP-200	58	52 1/2	24

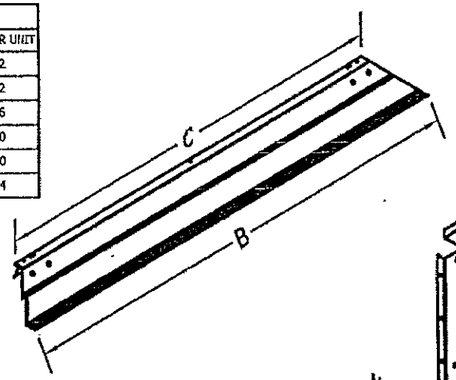

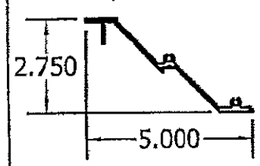

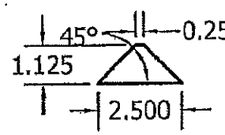

LOUVER GUSSET/ 0.63 ALUM 1100-H12	
UNIT SIZE	QTY PER UNIT
RSFP-90	12
RSFP-100	12
RSFP-120	16
RSFP-150	20
RSFP-180	20
RSFP-200	24

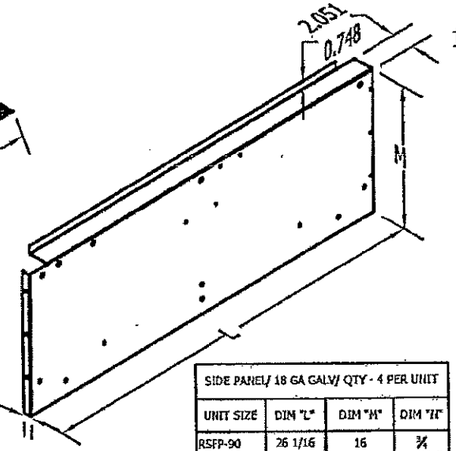

SIDE PANEL/ 18 GA GALV/ QTY - 4 PER UNIT			
UNIT SIZE	DIM "L"	DIM "M"	DIM "N"
RSFP-90	26 1/16	16	3/4
RSFP-100	30 1/16	16	3/4
RSFP-120	34 1/16	14	3/4
RSFP-150	40 1/16	14	3/4
RSFP-180	46 1/16	16	3/4
RSFP-200	52 1/16	16	1

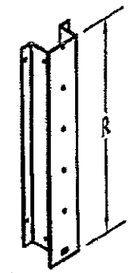

CENTER POST/ QTY - 4 PER UNIT				
UNIT SIZE	DIM "R"	DIM "S"	DIM "T"	ALUM THICKNESS
RSFP-150	21 3/16	3 3/4	1 15/16	0.080 1100-H12
RSFP-180	21 3/16	3 7/8	1 15/16	0.100 1100-H14
RSFP-200	26 1/4	5 5/16	1 15/16	0.125 3003-H14

FILTER RETAINER ANGLE 0.080 ALUM 1100-H12		
UNIT SIZE	DIM "A"	QTY PER
RSFP-90	11 5/8	8
RSFP-100	11 5/8	8
RSFP-120	15 5/8	8
RSFP-150	19 5/8	16
RSFP-180	19 5/8	16
RSFP-200	24 5/8	16

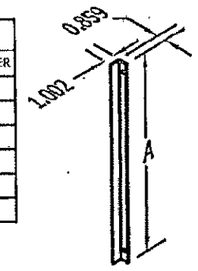

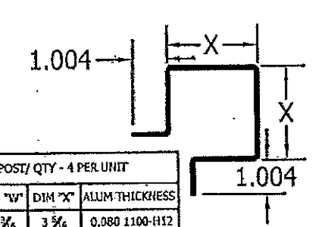

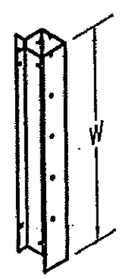

CORNER POST/ QTY - 4 PER UNIT			
UNIT SIZE	DIM "W"	DIM "X"	ALUM THICKNESS
RSFP-90	13 3/16	3 5/16	0.080 1100-H12
RSFP-100	13 3/16	2 13/16	0.080 1100-H12
RSFP-120	17 3/16	4 13/16	0.080 1100-H12
RSFP-150	21 3/16	2 3/4	0.080 1100-H12
RSFP-180	21 3/16	3 1/2	0.100 1100-H14
RSFP-200	26 1/4	3 3/4	0.125 3003-H14

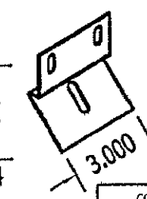

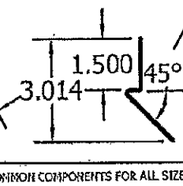

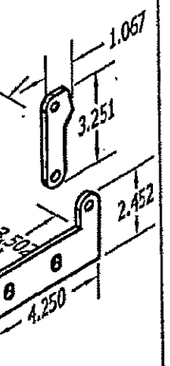

COMMON COMPONENTS FOR ALL SIZES		
COMPONENT	MATERIAL	QTY PER UNIT
HOOD LATCH	18 GA S.S 304-2B	1 OR 2
LOUVER BRKT	0.190 ALUM 1100-H14	2 OR 4
PIVOT BRKT	0.190 ALUM 1100-H14	2 OR 4
HOOD BRKT	0.190 ALUM 1100-H14	2 OR 4

NOTE: RSFP ONLY UTILIZES ONE HOOD LATCH
RSFP 180 AND 200 UTILIZE 4 HINGES

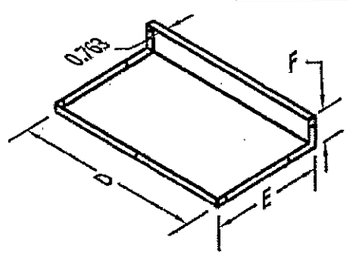

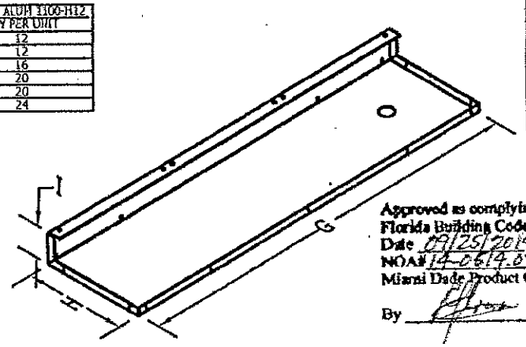

BLOWER CLOSURE PANEL					
UNIT SIZE	DIM "D"	DIM "E"	DIM "F"	QTY	MATERIAL
RSFP-90	12 5/16	7 1/2	6	2	18 GA GALV
RSFP-100	13 3/4	9	6	2	18 GA GALV
RSFP-120	16 1/4	10	5 5/16	2	18 GA GALV
RSFP-150	18 3/4	11 3/4	3 1/16	2	12 GA GALV
RSFP-180 RIGHT	22 1/4	10 1/4	2 1/16	1	12 GA GALV
RSFP-180 LEFT	22 1/4	38 5/8	2 1/16	1	12 GA GALV
RSFP-200	23 1/16	13 3/16	3 1/16	2	12 GA GALV

BLOWER SUPPORT PANEL					
UNIT SIZE	DIM "G"	DIM "H"	DIM "I"	QTY	MATERIAL
RSFP-90	26	6 7/8	6	2	18 GA GALV
RSFP-100	30	8 1/8	6	2	18 GA GALV
RSFP-120	34	8 7/8	5 5/16	2	18 GA GALV
RSFP-150	40	10 1/2	3 3/16	2	12 GA GALV
RSFP-180 RIGHT	46 1/4	11 7/8	2 5/16	1	12 GA GALV
RSFP-180 LEFT	46 1/4	11 7/8	2 5/16	1	12 GA GALV
RSFP-200	52	14 7/16	3 3/16	2	12 GA GALV

Approved as complying with the Florida Building Code
Date 09/25/2014
NOA# 14-0614.07
Miami Dade Product Control
By

RICE ENGINEERING
105 School Creek Trail
Luxemburg, WI 54217
Phone 920.845 1042
Fax 920.845.1048
www.rice-inc.com

Florida Firm No F-01000005061
Certificate of Authorization: #9090
L David Rice
Registration No 50923

L. DAVID RICE LICENSE No. 50923 STATE OF FLORIDA PROFESSIONAL ENGINEER

PAINT	PART NO.	MAT'L	GAUGE	DESCRIPTION

GREENHECK

DRAWN BY ----	ECO ----
DATE 07/14/14	ENG. REF. ----
SUPERSEDES ----	----
SCALE 1/12	----
CAD DRAWING NO. LPS1008	B

TITLE
RSFP–90 THRU 200
SHEET 8 OF 9

JUL 22 2014

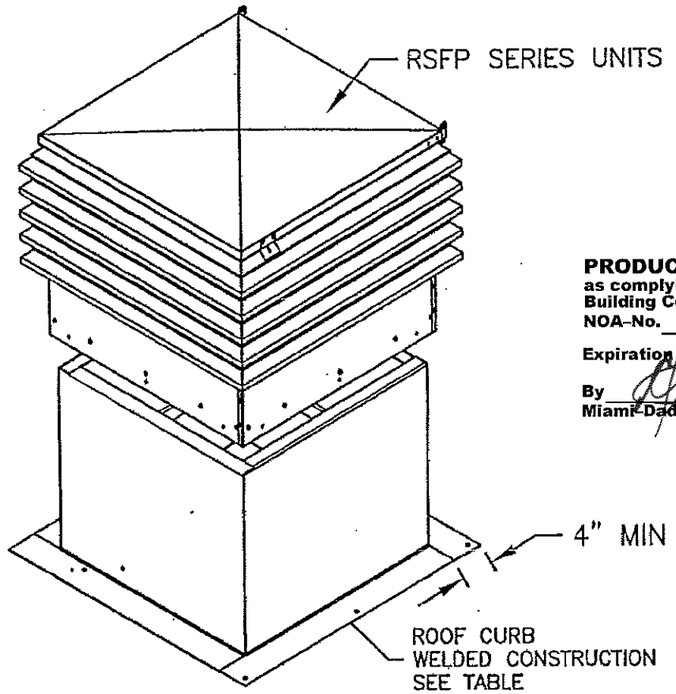

PRODUCT REVISED
as complying with the Florida Building Code
NOA-No. 16-0209.04
Expiration Date 09/25/2019
By
Miami-Dade Product Control

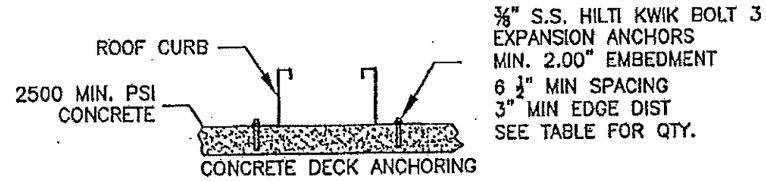

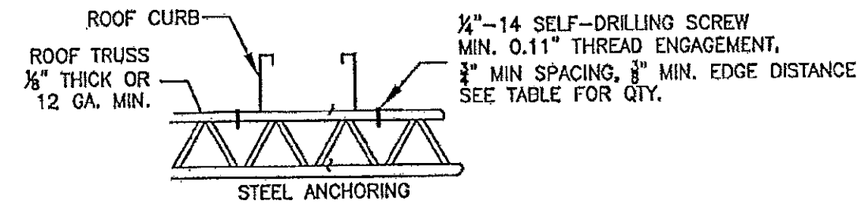

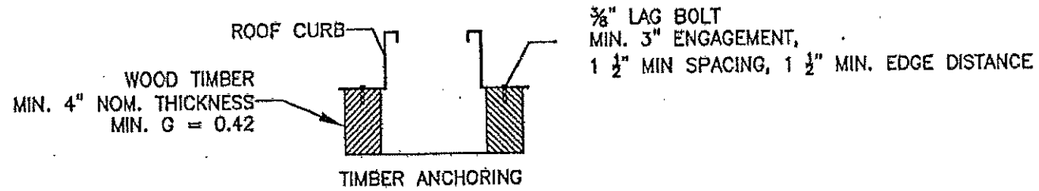

CURB TO DECK MOUNTING

UNIT SIZE	CONCRETE ANCHORING NO. OF FASTENERS PER SIDE	STEEL DECK ANCHORING NO. OF FASTENERS PER SIDE	TIMBER ANCHORING NO. OF FASTENERS PER SIDE
RSFP-90	5	8	5
RSFP-100, 150	3	5	4
RSFP-120	4	6	4
RSFP-180, 200	4	6	5

FAN TO CURB MOUNTING

UNIT SIZE	FASTENERS PER SIDE
RSFP-90, 100, 120	2
RSFP-150, 180, 200	3

¼ INCH FASTENER MINIMUM ⅝ INCH RECOMMENDED.
SELF-DRILLING SCREW, GALVANIZED A307 OR BETTER,
MINIMUM LENGHT OF 1.5"

Approved as complying with the Florida Building Code
Date 09/25/2014
NOA# 14-0514.07
Miami Dade Product Control
By

ROOF CURB REQUIRMENTS

UNIT SIZE	MAX CURB HEIGHT	MIN CURB GAGE (STEEL)
RSFP-90	42"	18
RSFP-100, 120	30"	18
RSFP-180, 150, 200	24"	12

RICE
ENGINEERING
105 School Creek Trail
Luxemburg, WI 54217
Phone: 920.845.1042
Fax: 920.845.1048
www.rice-inc.com

Florida Firm No: F-01000005061
Certificate of Authorization: #9090
L. David Rice
Registration No: 50923

L. DAVID RICE
LICENSE
No. 50923
STATE OF FLORIDA
PROFESSIONAL ENGINEER

JUL 22 2014

PAINT	PART NO.	MAT'L	GAUGE	DESCRIPTION

GREENHECK

TITLE
RSFP-90 THRU 200
SHEET 9 OF 9

DRAWN BY ----	ECO ----
DATE 07/14/14	ENG. REF. ----
SUPERSEDES ----	----
SCALE 1/16	----
CAD DRAWING NO. LPS1009	B