MIAMI-DADE COUNTY
DEPARTMENT OF REGULATORY AND ECONOMIC RESOURCES
BOARD AND CODE ADMINISTRATION DIVISION

MIAMI-DADE COUNTY
PRODUCT CONTROL SECTION
11805 SW 26 Street, Room 208
Miami, Florida 33175-2474
T (786) 315-2590 F (786) 315-2599
www.miamidade.gov/economy

# NOTICE OF ACCEPTANCE (NOA)

**Shutters Depot, LLC**
**1776 W. 41st Street**
**Hialeah, Florida 33012**

**SCOPE:**
This NOA is being issued under the applicable rules and regulations governing the use of construction materials. The documentation submitted has been reviewed and accepted by Miami-Dade County RER-Product Control Section to be used in Miami Dade County and other areas where allowed by the Authority Having Jurisdiction (AHJ).

This NOA shall not be valid after the expiration date stated below. The Miami-Dade County Product Control Section (In Miami Dade County) and/or the AHJ (in areas other than Miami Dade County) reserve the right to have this product or material tested for quality assurance purposes. If this product or material fails to perform in the accepted manner, the manufacturer will incur the expense of such testing and the AHJ may immediately revoke, modify, or suspend the use of such product or material within their jurisdiction. RER reserves the right to revoke this acceptance, if it is determined by Miami-Dade County Product Control Section that this product or material fails to meet the requirements of the applicable building code.

This product is approved as described herein, and has been designed to comply with the High Velocity Hurricane Zone of the Florida Building Code.

**DESCRIPTION: " HPMA / Performance System 2 " Aluminum Accordion Shutter**

**APPROVAL DOCUMENT:** Drawing No. AD10-30, titled " System 2 Aluminum Accordion Shutter ", sheets 1 through 10 of 10, prepared by MCY Engineering, Inc., dated May 13, 2010, last revision #3 dated March 20, 2015, signed and sealed by Yiping Wang, P.E., bearing the Miami-Dade County Product Control Renewal stamp with the Notice of Acceptance number and the expiration date by the Miami-Dade County Product Control Section.

**MISSILE IMPACT RATING: Large and Small Missile Impact Resistant**

**LABELING:** Each unit shall bear a permanent label with the manufacturer's name or logo, Hialeah, Florida, the following statement: "Miami-Dade County Product Control Approved", and NOA number, per TAS-201, TAS-202, and TAS-203, unless otherwise noted herein.

**RENEWAL** of this NOA shall be considered after a renewal application has been filed and there has been no change in the applicable building code negatively affecting the performance of this product.

**TERMINATION** of this NOA will occur after the expiration date or if there has been a revision or change in the materials, use, and/or manufacture of the product or process. Misuse of this NOA as an endorsement of any product, for sales, advertising or any other purposes shall automatically terminate this NOA. Failure to comply with any section of this NOA shall be cause for termination and removal of NOA.

**ADVERTISEMENT:** The NOA number preceded by the words Miami-Dade County, Florida, and followed by the expiration date may be displayed in advertising literature. If any portion of the NOA is displayed, then it shall be done in its entirety.

**INSPECTION:** A copy of this entire NOA shall be provided to the user by the manufacturer or its distributors and shall be available for inspection at the job site at the request of the Building Official.

This NOA **renews NOA #15-0615.11** and consists of this page 1, evidence submitted pages E-1, E-2, & E-3 as well as approval document mentioned above.

The submitted documentation was reviewed by **Helmy A. Makar, P.E., M.S.**

MIAMI-DADE COUNTY APPROVED

03/31/2016

**NOA No. 16-0209.18**
**Expiration Date: 03/31/2021**
**Approval Date: 03/31/2016**

**Shutters Depot, LLC**

## NOTICE OF ACCEPTANCE: EVIDENCE SUBMITTED

1. **EVIDENCE SUBMITTED UNDER PREVIOUS APPROVAL # 10-0930.14**

A. **DRAWINGS**

1. *Drawing No. AD10-30, titled " System 2 Aluminum Accordion Shutter ", sheets 1 through 10 of 10, prepared by MCY Engineering, Inc., dated May 13, 2010, last revision #1 dated September 05, 2010, signed and sealed by Yiping Wang, P.E.*

B. **TESTS**

1. *See Association's generic approval under 10-0710.*

C. **CALCULATIONS**

1. *See Association's generic approval under 10-0710.*

D. **QUALITY ASSURANCE**

1. *By Miami-Dade County Building and Neighborhood Compliance Department.*

E. **MATERIAL CERTIFICATIONS**

1. *See Association's generic approval under 10-0710.*

F. **STATEMENTS**

1. *Release letter issued by the Hurricane Protection Manufacturers Association, dated September 30, 2010, certifying this product to meet the criteria of product tested and approved, and allowing Shutters Depot to use the test results approved under Miami Dade County Approval No. 10-0710, signed by Mr. Henry Revilla.*
2. *Acknowledgment letter by Shutters Depot dated February 12, 2011, signed by Mr. Fracisco Ceballos.*
3. *Letter by MCY Engineering, Inc., dated February 05, 2011, signed and sealed by Yipping Wang, P.E., certifying that the drawing (No. AD10-30) prepared for Shutters Depot is engineering wise identical to HPMA's generic drawing (No. AD10-12).*

2. **EVIDENCE SUBMITTED UNDER PREVIOUS APPROVAL # 10-0930.14**

A. **DRAWINGS**

1. *Drawing No. AD10-30, titled " System 2 Aluminum Accordion Shutter ", sheets 1 through 10 of 10, prepared by MCY Engineering, Inc., dated May 13, 2010, last revision #1 dated April 09, 2012, signed and sealed by Yiping Wang, P.E.*

B. **TESTS**

1. *See Association's generic approval under 12-0736.*

**Helmy A. Makar, P.E., M.S.**
**Product Control Section Supervisor**
**NOA No. 16-0209.18**
**Expiration Date: 03/31/2021**
**Approval Date: 03/31/2016**

## NOTICE OF ACCEPTANCE: EVIDENCE SUBMITTED

**C. CALCULATIONS**

1. *See Association's generic approval under 12-0736.*

**D. QUALITY ASSURANCE**

1. *By Miami-Dade County Department of Regulatory and Economic Resources.*

**E. MATERIAL CERTIFICATIONS**

1. *See Association's generic approval under 12-0736.*

**F. STATEMENTS**

1. *Release letter issued by the Hurricane Protection Manufacturers Association, dated July 27, 2012, certifying this product to meet the criteria of product tested and approved, and allowing Shutters Depot, LLC to use the test results approved under Miami Dade County Approval No. 12-0736, signed by Mr. Henry Revilla.*
2. *Acknowledgment letter by Shutters Depot, LLC, dated July 27, 2012, signed by Mr. Fracisco Ceballos.*
3. *Letter by MCY Engineering, Inc., dated April 09, 2012, signed and sealed by Yipping Wang, P.E., certifying that the drawing (No. AD10-30) prepared for Shutters Depot, LLC is engineering wise identical to HPMA's generic drawing (No. AD10-12).*

**3. EVIDENCE SUBMITTED UNDER PREVIOUS APPROVAL # 15-0615.11**

**A. DRAWINGS**

1. *Drawing No. AD10-30, titled " System 2 Aluminum Accordion Shutter ", sheets 1 through 10 of 10, prepared by MCY Engineering, Inc., dated May 13, 2010, last revision #3 dated March 20, 2015, signed and sealed by Yiping Wang, P.E.*

**B. TESTS**

1. *See Association's generic approval under 15-0430.*

**C. CALCULATIONS**

1. *See Association's generic approval under 15-0430.*

**D. QUALITY ASSURANCE**

1. *By Miami-Dade County Department of Regulatory and Economic Resources.*

**E. MATERIAL CERTIFICATIONS**

1. *See Association's generic approval under 15-0430.*

**Helmy A. Makar, P.E., M.S.**
**Product Control Section Supervisor**
**NOA No. 16-0209.18**
**Expiration Date: 03/31/2021**
**Approval Date: 03/31/2016**

## NOTICE OF ACCEPTANCE: EVIDENCE SUBMITTED

**4. NEW EVIDENCE SUBMITTED**

**A. DRAWINGS**

*1. None.*

**B. TESTS**

*1. See Association's generic approval under 15-0430.*

**C. CALCULATIONS**

*1. See Association's generic approval under 15-0430.*

**D. QUALITY ASSURANCE**

*1. By Miami-Dade County Department of Regulatory and Economic Resources.*

**E. MATERIAL CERTIFICATIONS**

*1. See Association's generic approval under 15-0430.*

**Helmy A. Makar, P.E., M.S.**
**Product Control Section Supervisor**
**NOA No. 16-0209.18**
**Expiration Date: 03/31/2021**
**Approval Date: 03/31/2016**

## GENERAL NOTES:

1. THIS PRODUCT HAS BEEN DESIGNED AND TESTED TO COMPLY WITH THE REQUIREMENTS OF THE HIGH VELOCITY HURRICANE ZONE (HVHZ) OF THE 2014 FLORIDA BUILDING CODE.

2. STAINLESS STEEL SHEET METAL SCREWS USED AT LOUVER PIN SHALL BE # 14 x 3", 410-HT MINIMUM SERIES W/ 135.0 ksi YIELD STRENGTH & 180 ksi TENSILE STRENGTH. SCREWS SHALL BE COATED WITH XYLAN 5000 SERIES FLUOROPOLYMER COATINGS AS MANUFACTURED BY WHITFORD Co, BOX 507. WEST CHESTER PA. 19381.

3. ALL ALUMINUM EXTRUSIONS SHALL BE 6063-T6 ALLOY WITH MINIMUM YIELD STRENGTH OF Fy=31.0 ksi.

4. ANCHORS SHALL BE AS LISTED, SPACED AS SHOWN ON DETAILS. ANCHORS EMBEDMENT TO BASE MATERIAL SHALL BE BEYOND WALL DRESSING OR STUCCO.

5. ANCHORING OR LOADING CONDITIONS NOT SHOWN IN THESE DETAILS ARE NOT PART OF THIS APPROVAL.

6. WOOD BUCKS BY OTHERS MUST BE SOUTHERN PINE, G = 0.55 AND MUST BE ANCHORED PROPERLY TO TRANSFER LOADS TO THE STRUCTURE.

7. ALL ALUMINUM POP RIVETS TO BE 5052 ALUMINUM ALLOY WITH ALUMINUM MANDREL.

8. BOLTS TO BE GALVANIZED OR STAINLESS STEEL WITH 36 ksi MINIMUM MINIMUM YIELD STRENGTH.

9. SHUTTER'S COMPONENTS ARE PATENT PENDING.

10. IT SHALL BE THE RESPONSIBILITY OF THE CONTRACTOR TO VERIFY THE SOUNDNESS OF THE STRUCTURE WHERE SHUTTER IS TO BE ATTACHED TO INSURE PROPER ANCHORAGE. THIS SHUTTER SHALL ONLY BE ATTACHED TO CONCRETE, BLOCK OR WOOD FRAME BUILDINGS.

11. A PERMANENT SHUTTER MANUFACTURER'S LABEL SHALL BE PLACED ON THE EXPOSED SURFACE OF THE FEMALE CENTER MATE BLADE (COMPONENT H ). ONE LABEL SHALL BE PLACED FOR EVERY OPENING. LABEL SHALL READ AS FOLLOWS:
    "PERFORMANCE SYSTEM 2 ACCORDION SHUTTER"
    SHUTTERS DEPOT, LLC.
    HIALEAH, FL
    MIAMI-DADE COUNTY PRODUCT CONTROL APPROVED
    TEST REPORT TAS-201, 202 & 203.

12. (a) THIS PRODUCT APPROVAL DOCUMENT (P.A.D.) PREPARED BY THIS ENGINEER IS GENERIC.

(b) CONTRACTOR TO BE RESPONSIBLE FOR THE SELECTION, PURCHASE AND INSTALLATION INCLUDING LIFE SAFETY OF THIS PRODUCT BASED ON THIS PRODUCT APPROVAL PROVIDED HE/SHE DOES NOT DEVIATE FROM THE CONDITIONS DETAILED ON THIS DOCUMENT. CONSTRUCTION SAFETY AT SITE IS THE CONTRACTOR'S RESPONSIBILITY.

(c) THIS PRODUCT APPROVAL DOCUMENT WILL BE CONSIDERED INVALID IF MODIFIED.

(d) SITE SPECIFIC PROJECTS SHALL BE PREPARED BY A FLORIDA REGISTERED ENGINEER OR ARCHITECT WHICH WILL BECOME THE ENGINEER OF RECORD (E.O.R.) FOR THE PROJECT AND WHO WILL BE RESPONSIBLE FOR THE PROPER USE OF THE P.A.D. ENGINEER OF RECORD, ACTING AS DELEGATED ENGINEER TO THE P.A.D. ENGINEER, SHALL SUBMIT TO THIS LATTER THE SITE SPECIFIC DRAWINGS FOR REVIEW.

(e) THIS P.A.D. SHALL BEAR THE DATE AND ORIGINAL SEAL AND SIGNATURE OF THE PROFESSIONAL ENGINEER THAT PREPARED IT.

13. ULTIMATE LOAD OBTAINED FROM ASCE 7-10, MULTIPLY BY 0.6 SHALL BE LESS THAN OR EQUAL TO MAX. DESIGN LOAD IN THIS DOCUMENT. THE DESIGN LOADS SHOWN IN THIS DOCUMENT ARE ALLOWABLE DESIGN LOADS.

TYPICAL ANCHORS: (SEE CHARTS FOR ANCHOR SPACING)

TYPE A. 1/4" DIA. ITW TAPCON BY ITW BUILDEX
Fu = 120 KSI, Fy = 92 KSI
INTO CONCRETE fc'=3000 PSI
1-3/4" MIN. EMBED
2-1/2" MIN. EDGE DISTANCE

TYPE A1. INTO CONCRETE BLOCK
1-1/4" MIN. EMBED
2-1/2" MIN. EDGE DISTANCE

TYPE B. 1/4"-20 CALK-IN BY 'POWERS' FASTENERS
INTO CONCRETE fc'=3000 PSI
7/8" MIN. EMBED
3" MIN. EDGE DISTANCE

TYPE B1. INTO CONCRETE BLOCK
7/8" MIN. EMBED
3" MIN. EDGE DISTANCE

TYPE C. 1/4" CRETE-FLEX SS4 MASONRY ANCHOR BY "ELCO" CONSTRUCTION PRODUCTS
Fu = 120 KSI, Fy = 92 KSI
INTO CONCRETE fc'=3000 PSI
1 3/4" MIN. EMBED
2 1/2" MIN. EDGE DISTANCE

TYPE C1. INTO CONCRETE BLOCK
1 1/4" MIN. EMBED
2 1/2" MIN. EDGE DISTANCE

NOTES:

WHEN EDGE DISTANCE EQUAL OR GREATER THAN 2" AND LESS THAN MIN. EDGE DISTANCE SPECIFIED ABOVE THE ANCHOR SPACE IN ANCHOR CHARTS ON THE DRAWINGS MUST MULTIPLY BY FOLLOWING REDUCTION FACTOR:

ANCHOR TYPE A, & A1: REDUCTION FACTOR = 0.77
ANCHOR TYPE B & B1: REDUCTION FACTOR = 0.50
ANCHOR TYPE C & C1: REDUCTION FACTOR = 0.77

PLEASE NOTE THIS INSTALLATION ARE ONLY VALID FOR THE RESULTING ANCHOR SPACE EQUAL OR GREATER THAN 3".

PRODUCT RENEWED
as complying with the Florida
Building Code
Acceptance No 16-0209.18
Expiration Date 03/31/2021
By
Miami Dade Product Control

PRODUCT REVISED
as complying with the Florida
Building Code
Acceptance No 15-0615.11
Expiration Date 03/31/2016
By
Miami Dade Product Control

MIAMI DADE COUNTY

YIRING WANG, P.E.
FLORIDA REGISTRATION
PE #55983
C.A.N. 28677
STATE OF FLORIDA
PROFESSIONAL ENGINEER

JUN 05 2015

REVISIONS

| NO | DATE | DESCRIPTION |
|---|---|---|
| 1 | 06/05/10 | AS PER DCCO COMMENTS |
| 2 | 02/25/12 | UPDATE TO 2010 FBC |
| 3 | 02/20/15 | UPDATE TO 2014 FBC |


MCY ENGINEERING, INC.
GLAZING CONSULTANTS
8501 SW 124 AVE. STE 205A
MIAMI, FL 33183
P: 305.271.0117
F: 786.573.5063
www.MCYEngineering.com
MCY.Engineering@Att.net


SYSTEM 2 ALUMINUM ACCORDION SHUTTER
SHUTTERS DEPOT, LLC. (H.P.M.A. #41)
1776 W. 41 STREET
HIALEAH, FL 33012
Tel: (305) 822 - 3575 Fax: (305) 822 - 3731

| | |
|---|---|
| DATE | 5-13-10 |
| SCALE | |
| DRAWN | E. D. |
| PROJECT | 10-04 |

DRAWING NO.
AD10--30

1 OF 10

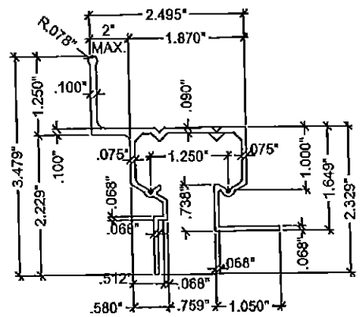


A WALL HEADER (& INVERTED)

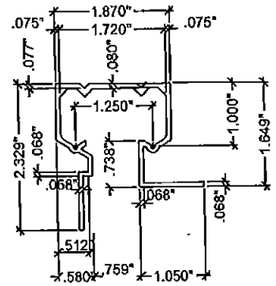


B CEILING HEADER

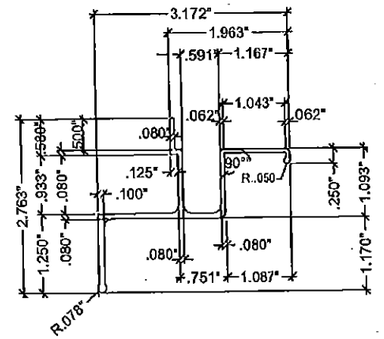


C WALL SILL

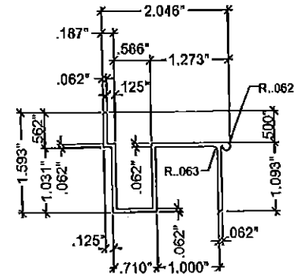


D FLOOR SILL
SCALE : 3/8" = 1"

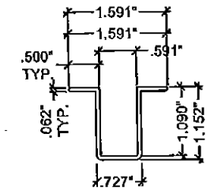


D1 FLOOR SILL
SCALE : 3/8" = 1"

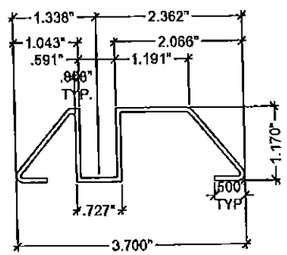


D2 THRESHOLD TRACK

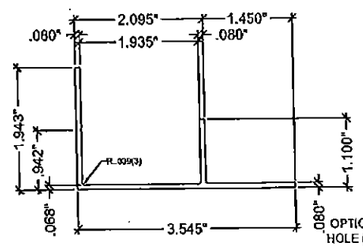


E ADJUSTABLE SILL ADAPTOR

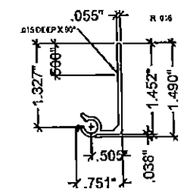


F1 180° MALE STARTER

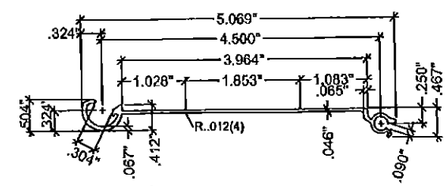


G MALE/FEMALE SOLID BLADE

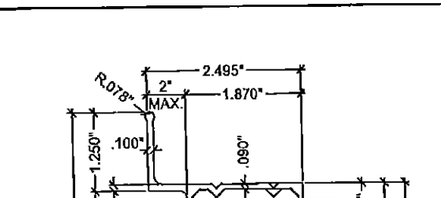


G' MALE/FEMALE PERFORATED BLADE

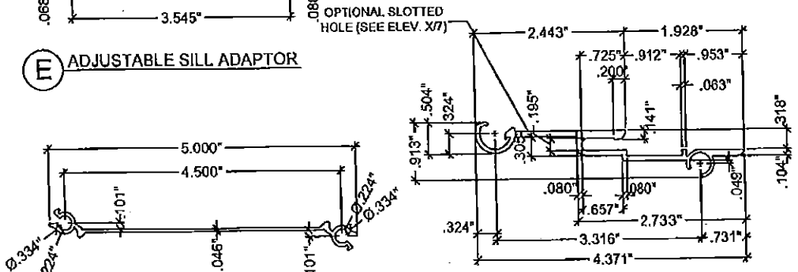


H FEMALE CENTERMATE BLADE
SCALE : 3/8" = 1"

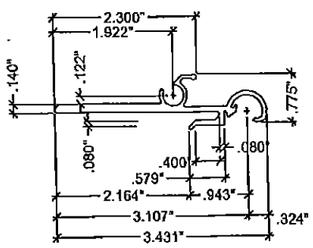


H1 MALE CENTERMATE BLADE
SCALE : 3/8" = 1"

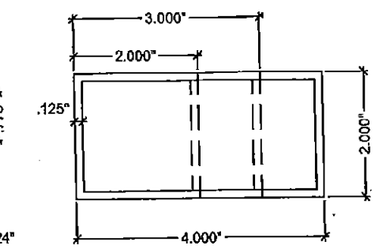


M ALUMINUM TUBES

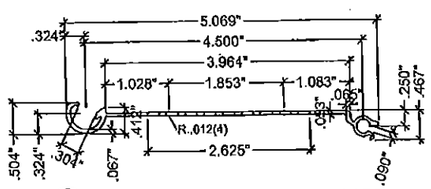


G1 MALE/MALE SOLID BLADE

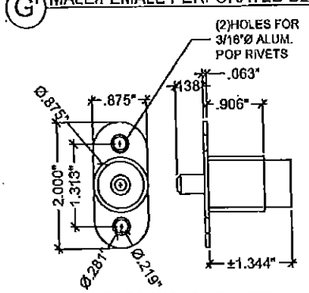


BRASS NICKEL PLATED
PUSH BUTTON LOCK

J

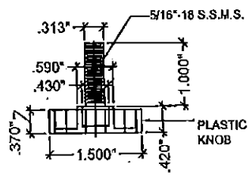


5/16" Ø X 1" S.S.M.S
W/ PLASTIC KNOB LOCK

J1

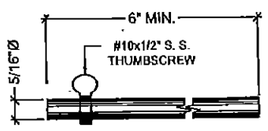


K LOCKING PIN (OPTIONAL)
SCALE : 3/8" = 1"

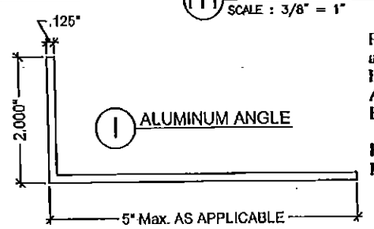


I ALUMINUM ANGLE

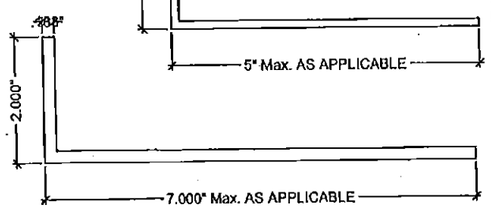


L1 ALUMINUM ANGLE

# COMPONENTS

PRODUCT RENEWED
as complying with the Florida
Building Code
Acceptance No 16-0209.18
Expiration Date 03/31/2021
By
Miami Dade Product Control

PRODUCT REVISED
as complying with the Florida
Building Code
Acceptance No 15-0615.11
Expiration Date 03/31/2016
By
Miami Dade Product Control

MIAMI DADE COUNTY

YIPING WANG, P.E.
FLORIDA REGISTRATION
PE #55983
C.A.N. 28677
No. 55983
STATE OF FLORIDA

JUN 05 2015

| REVISIONS | | |
|---|---|---|
| NO. | DATE | DESCRIPTION |
| 1 | 09/05/10 | AS PER BCCO COMMENTS |
| 2 | 02/25/12 | UPDATE TO 2010 FBC |
| 3 | 06/20/15 | UPDATE TO 2014 FBC |


MCY ENGINEERING, INC.
GLAZING CONSULTANTS
9501 SW 124 AVE. STE 205A
MIAMI, FL 33183
P: 305.271.0117
F: 786.573.5063
www.MCYEngineering.com
MCY.Engineering@Att.net


SYSTEM 2 ALUMINUM ACCORDION SHUTTER
SHUTTERS DEPOT, LLC. (H.P.M.A. #41)
1776 W. 41 STREET
HIALEAH, FL 33012
Tel: (305) 822 - 3575 Fax: (305) 822 - 3731

| | |
|---|---|
| DATE | 6-13-10 |
| SCALE | |
| DRAWN | E. D. |
| PROJECT | 10-04 |
| DRAWING NO. | AD10-30 |
| | 2 OF 10 |

## MAXIMUM DESIGN PRESSURE RATING "Pd" (PSF) AND CORRESPONDING MAXIMUM SPAN "L" SCHEDULE.

| MAXIMUM DESIGN LOAD "Pd" (PSF) | MAXIMUM SHUTTER SPAN FOR ALL SECTIONS | | MINIMUM SEPARATION TO GLASS (in.) ALL SECTIONS |
|---|---|---|---|
| | Max. PANEL LENGTH L+ (ft.) | Max. PANEL LENGTH L- (ft.) | |
| 40 | 13'-2" | 14'-1" | 3.0 |
| 45 | 12'-9" | 14'-1" | 3.0 |
| 50 | 12'-5" | 14'-1" | 3.0 |
| 55 | 12'-2" | 13'-5" | 3.0 |
| 60 | 11'-11" | 12'-10" | 3.0 |
| 65 | 11'-8" | 12'-4" | 3.0 |
| 70 | 11'-5" | 11'-11" | 3.0 |
| 75 | 11'-3" | 11'-6" | 3.0 |
| 80 | 11'-1" | 11'-2" | 3.0 |
| 85 | 10'-10" | 10'-10" | 3.0 |
| 90 | 10'-6" | 10'-6" | 3.0 |
| 95 | 10'-3" | 10'-3" | 2.875 |
| 100 | 10' | 10' | 2.875 |
| 105 | 9'-9" | 9'-9" | 2.625 |
| 110 | 9'-6" | 9'-6" | 2.5 |
| 115 | 9'-4" | 9'-4" | 2.5 |
| 120 | 9'-1" | 9'-1" | 2.5 |
| 125 | 8'-10" | 8'-10" | 2.5 |
| 130 | 8'-6" | 8'-6" | 2.375 |
| 135 | - | 8'-2" | 2.375 |
| 140 | - | 7'-11" | 2.375 |
| 145 | - | 7'-7" | 2.375 |
| 150 | - | 7'-4" | 2.375 |
| 155 | - | 7'-2" | 2.375 |
| 160 | - | 6'-11" | 2.375 |
| 165 | - | 6'-8" | 2.375 |
| 170 | - | 6'-6" | 2.375 |
| 175 | - | 6'-4" | 2.375 |
| 180 | - | 6'-2" | 2.375 |
| 185 | - | 6' | 2.375 |
| 190 | - | 5'-10" | 2.375 |
| 195 | - | 5'-8" | 2.375 |

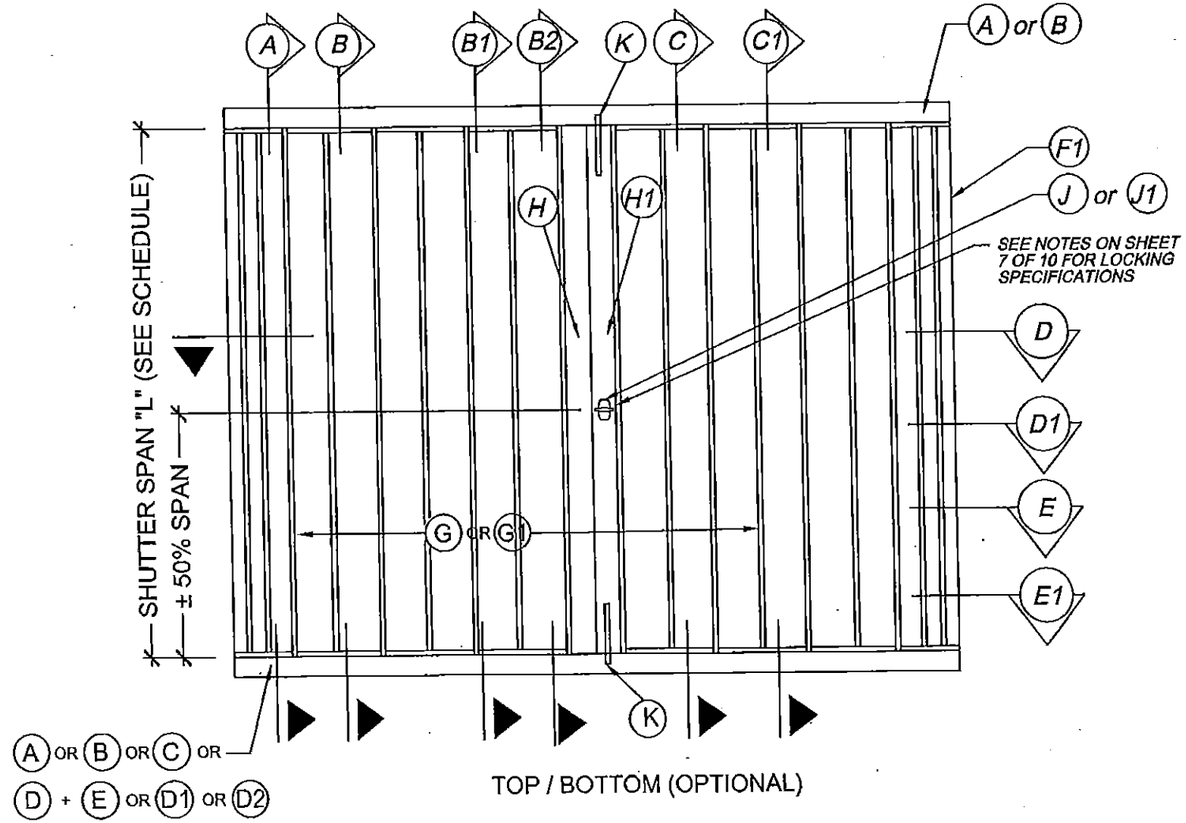


## TYPICAL ELEVATION

N.T.S.

### INSTRUCTION:

**STEP 1** DETERMINE DESIGN WIND LOAD REQUIREMENT BASED ON VELOCITY, BUILDING HEIGHT, WIND ZONE USING APPLICABLY ASCE 7 STANDARD.

**STEP 2** CHECK SHUTTER CAPACITY FOR A GIVEN SHUTTER SPAN USING CHARTS ON SHEET 3. MAX. DESIGN LOAD FROM CHART HAS TO BE GREATER THAN DESIGN WIND LOAD FROM STEP 1.

**STEP 3** USING CHARTS ON SHEET 4 THRU SHEET 10 SELECT ANCHOR TYPE AND SPACING BASED ON DESIGN LOAD AND SHUTTER SPAN FOR THE ANCHOR DETAIL USED.

PRODUCT RENEWED
as complying with the Florida Building Code
Acceptance No 16-0209.18
Expiration Date 03/31/2021
By [signature]
Miami Dade Product Control

PRODUCT REVISED
as complying with the Florida Building Code
Acceptance No 15-0615.11
Expiration Date 03/31/2016
By [signature]
Miami Dade Product Control
MIAMI DADE COUNTY

YIPING WANG, P.E.
FLORIDA REGISTRATION
P.E. #55983
C.A.N. 28677
LICENSED
No. 55983
STATE OF FLORIDA
PROFESSIONAL ENGINEER
JUN 05 2015

REVISIONS

| NO | DATE | DESCRIPTION |
|---|---|---|
| 1 | 09/05/10 | AS PER BCCO COMMENTS |
| 2 | 03/25/12 | UPDATE TO 2010 FBC |
| 3 | 03/20/15 | UPDATE TO 2014 FBC |


MCY ENGINEERING, INC.
GLAZING CONSULTANTS
8501 SW 124 AVE. STE 205A
MIAMI, FL 33183
P: 305.271.0117
F: 786.573.5063
www.MCYEngineering.com
MCY.Engineering@Att.net


SYSTEM 2 ALUMINUM ACCORDION SHUTTER
SHUTTERS DEPOT, LLC. (H.P.M.A. #41)
1776 W. 41 STREET
HIALEAH, FL 33012
Tel: (305) 822 - 3575 Fax: (305) 822 - 3731

| | |
|---|---|
| DATE | 6-13-10 |
| SCALE | |
| DRAWN | E. D. |
| PROJECT | 10-04 |
| DRAWING NO. | AD10-30 |

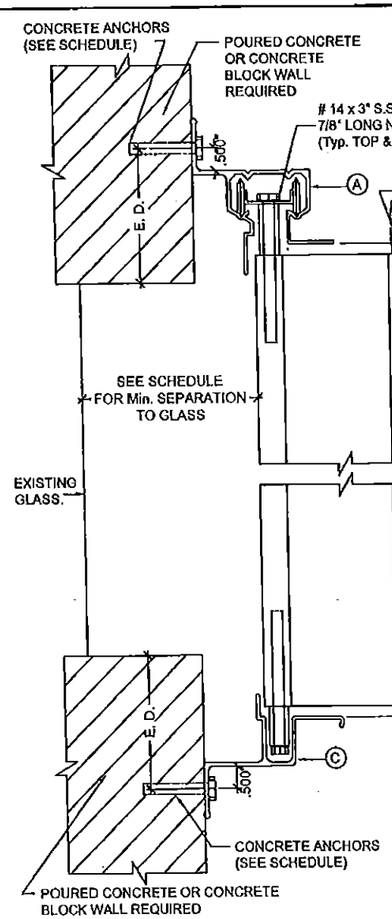


WALL MOUNTING INSTALLATION
SECTION A
SCALE : 3/8" = 1"

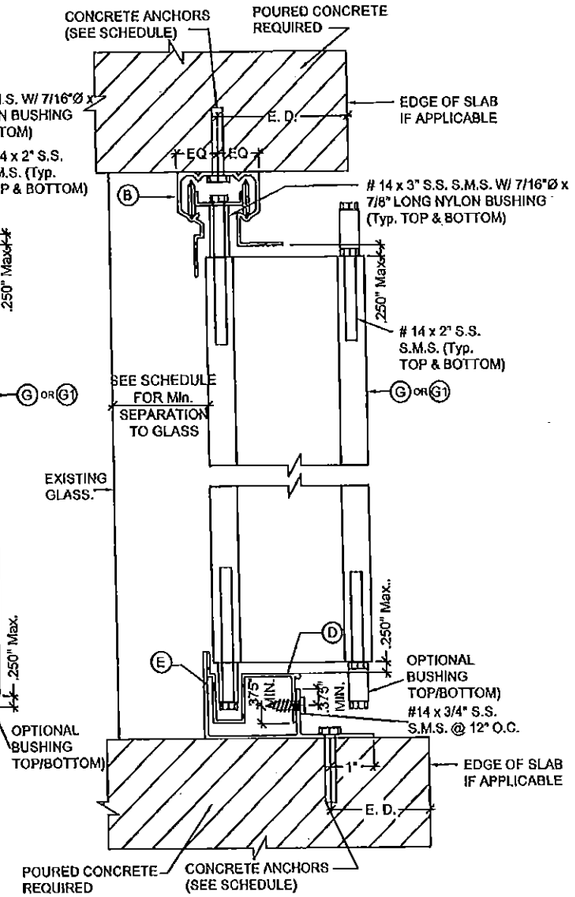


CEILING & FLOOR MOUNTING INSTALLATION
SECTION B
SCALE : 3/8" = 1"

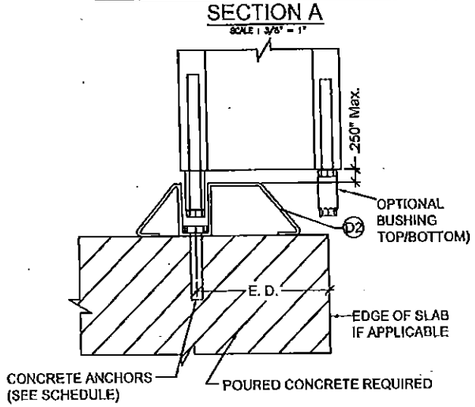


FLOOR MOUNTING INSTALLATION
SECTION B1
SCALE : 3/8" = 1"

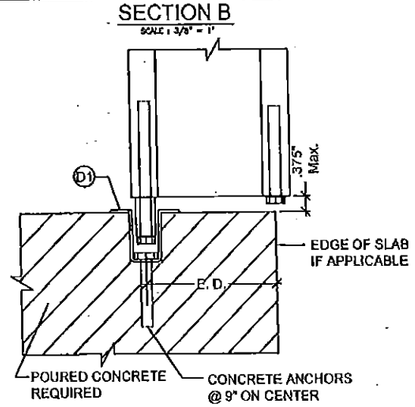


FLOOR MOUNTING INSTALLATION
SECTION B2
SCALE : 3/8" = 1"

MAXIMUM DESIGN PRESSURE RATING "Pd" (PSF) AND CORRESPONDING MAXIMUM ANCHOR SPACING (in.) SCHEDULE. +

| MAXIMUM DESIGN LOAD "Pd" (PSF) | SHUTTER SPAN (INCH) | SECTION A (TOP/BOTTOM) | | | | | SECTION B (TOP/BOTTOM) B1 (BOTTOM) | | |
|---|---|---|---|---|---|---|---|---|---|
| | | SUBSTRATE CONCRETE | | | SUBSTRATE BLOCK | | SUBSTRATE CONCRETE | | |
| | | ANCHOR TYPE A | ANCHOR TYPE B | ANCHOR TYPE C | ANCHOR TYPE B1 | ANCHOR TYPE C1 | ANCHOR TYPE A | ANCHOR TYPE B | ANCHOR TYPE C |
| 60 | 60" | 9 | 9 | 9 | 4 | 4.6 | 6 | 6 | 6 |
| | 78 | 9 | 9 | 9 | 3 | 3.5 | 6 | 6 | 6 |
| | 96 | 8 | 7.5 | 8 | - | - | 6 | 6 | 6 |
| | 120" | 6 | 6 | 6.5 | - | - | 6 | 6 | 6 |
| | 144" | 5 | 5 | 5.5 | - | - | 6 | 6 | 6 |
| | 154" | 5 | 4.5 | 5 | - | - | 6 | 6 | 6 |
| 65 | 60" | 9 | 9 | 9 | 3.5 | 4.2 | 6 | 6 | 6 |
| | 78 | 9 | 8.5 | 9 | - | 3.2 | 6 | 6 | 6 |
| | 96 | 7 | 7 | 7.5 | - | - | 6 | 6 | 6 |
| | 120" | 5.5 | 5.5 | 6 | - | - | 6 | 6 | 6 |
| | 148" | 4.5 | 4.5 | 4.5 | - | - | 6 | 5.5 | 6 |
| 70 | 60" | 9 | 9 | 9 | 3.5 | 3.9 | 6 | 6 | 6 |
| | 78 | 8 | 8 | 8.5 | - | 3 | 6 | 6 | 6 |
| | 96 | 6.5 | 6.5 | 7 | - | - | 6 | 6 | 6 |
| | 120" | 5.5 | 5 | 5.5 | - | - | 6 | 6 | 6 |
| | 143" | 4.5 | 4.5 | 4.5 | - | - | 5.5 | 5.5 | 6 |
| 80 | 60" | 9 | 9 | 9 | 3 | 3.4 | 6 | 6 | 6 |
| | 78 | 7 | 7 | 7.5 | - | - | 6 | 6 | 6 |
| | 96 | 6 | 5.5 | 6 | - | - | 6 | 6 | 6 |
| | 120" | 4.5 | 4.5 | 5 | - | - | 6 | 6 | 6 |
| | 134" | 4 | 4 | 4.5 | - | - | 5.5 | 5 | 6 |
| 100 | 60" | 7.5 | 7.5 | 8 | - | - | 6 | 6 | 6 |
| | 78 | 5.5 | 5.5 | 6 | - | - | 6 | 6 | 6 |
| | 96 | 4.5 | 4.5 | 5 | - | - | 6 | 6 | 6 |
| | 120" | 3.5 | 3.5 | 4 | - | - | 5 | 4.5 | 6 |
| 195 | 60" | 3.5 | 3.5 | 4 | - | - | 5 | 4.5 | 6 |
| | 66" | 3.5 | 3 | 3.5 | - | - | 4.5 | 4 | 5.5 |

NOTE:
FOR LIGHT DUTY SHUTTER ON SHEET 9, MAX. SPACING SHOULD BE LIMITED TO 6" O.C.

PRODUCT RENEWED
as complying with the Florida Building Code
Acceptance No 16-0209.18
Expiration Date 03/31/2021
By
Miami Dade Product Control

PRODUCT REVISED
as complying with the Florida Building Code
Acceptance No 15-0615.11
Expiration Date 03/31/2016
By
Miami Dade Product Control
MIAMI DADE COUNTY

YIPING WANG, P.E.
FLORIDA REGISTRATION
LPE #55983
C.A.N. 28677
No. 55983
STATE OF FLORIDA
PROFESSIONAL ENGINEER

JUN 05 2015

REVISIONS

| NO | DATE | DESCRIPTION |
|---|---|---|
| 1 | 06/05/10 | AS PER BCCO COMMENTS |
| 2 | 02/23/12 | UPDATE TO 2010 FBC |
| 3 | 03/20/15 | UPDATE TO 2014 FBC |

MCY ENGINEERING, INC.
GLAZING CONSULTANTS
8501 SW 124 AVE. STE 205A
MIAMI, FL 33183
P: 305.271.0117
F: 786.573.5063
www.MCYEngineering.com
MCY.Engineering@att.net

SYSTEM 2 ALUMINUM ACCORDION SHUTTER
SHUTTERS DEPOT, LLC. (H.P.M.A. #41)
1776 W. 41 STREET
HIALEAH, FL 33012
Tel: (305) 822 - 3575 Fax: (305) 822 - 3731

| | |
|---|---|
| DATE | 6-13-10 |
| SCALE | |
| DRAWN | E. D. |
| PROJECT | 10-04 |
| DRAWING NO. | AD10-30 |
| | 4 OF 10 |

## MAXIMUM DESIGN PRESSURE RATING "Pd" (PSF) AND CORRESPONDING MAXIMUM ANCHOR SPACING (in.) SCHEDULE. +

| MAXIMUM DESIGN LOAD "Pd" (PSF) | SHUTTER SPAN (INCH) | SECTION C TOP/BOTTOM | | | | | | SECTION C1 BOTTOM | | | | | |
|---|---|---|---|---|---|---|---|---|---|---|---|---|---|
| | | SUBSTRATE CONCRETE | | | SUBSTRATE BLOCK | | | SUBSTRATE CONCRETE | | | SUBSTRATE BLOCK | | |
| | | ANCHOR TYPE A | ANCHOR TYPE B | ANCHOR TYPE C | ANCHOR TYPE A1 | ANCHOR TYPE B1 | ANCHOR TYPE C1 | ANCHOR TYPE A | ANCHOR TYPE B | ANCHOR TYPE C | ANCHOR TYPE A1 | ANCHOR TYPE B1 | ANCHOR TYPE C1 |
| 60 | 60" | 6 | 6 | 6 | 4 | 5.5 | 8.1 | 6 | 6 | 6 | 4 | 6 | 8.1 |
| | 78" | 6 | 6 | 6 | 3 | 4.5 | 6.3 | 6 | 6 | 6 | 3 | 4.5 | 6.3 |
| | 96" | 6 | 6 | 6 | - | 3.5 | 5.1 | 6 | 6 | 6 | - | 4 | 5.1 |
| | 120" | 6 | 6 | 6 | - | - | 4.1 | 6 | 6 | 6 | - | 3 | 4.1 |
| | 144" | 6 | 6 | 6 | - | - | 3.4 | 6 | 6 | 6 | - | - | 3.4 |
| | 154" | 6 | 6 | 6 | - | - | 3.2 | 6 | 6 | 6 | - | - | 3.2 |
| 65 | 60" | 6 | 6 | 6 | 3.7 | 5 | 7.5 | 6 | 6 | 6 | 3.7 | 5.5 | 7.5 |
| | 78 | 6 | 6 | 6 | - | 4 | 5.8 | 6 | 6 | 6 | - | 4.5 | 5.8 |
| | 96 | 6 | 6 | 6 | - | 3 | 4.7 | 6 | 6 | 6 | - | 3.5 | 4.7 |
| | 120" | 6 | 6 | 6 | - | - | 3.8 | 6 | 6 | 6 | - | - | 3.8 |
| | 148" | 6 | 6 | 6 | - | - | 3.1 | 6 | 6 | 6 | - | - | 3.1 |
| 70 | 60" | 6 | 6 | 6 | 3.4 | 5 | 7 | 6 | 6 | 6 | 3.4 | 5.5 | 7 |
| | 78 | 6 | 6 | 6 | - | 3.5 | 5.4 | 6 | 6 | 6 | - | 4 | 5.4 |
| | 96 | 6 | 6 | 6 | - | 3 | 4.4 | 6 | 6 | 6 | - | 3 | 4.4 |
| | 120" | 6 | 6 | 6 | - | - | 3.5 | 6 | 6 | 6 | - | - | 3.5 |
| | 143" | 6 | 6 | 6 | - | - | - | 6 | 6 | 6 | - | - | - |
| 80 | 60" | 6 | 6 | 6 | - | 4 | 6.1 | 6 | 6 | 6 | - | 4.5 | 6.1 |
| | 78 | 6 | 6 | 6 | - | 3 | 4.7 | 6 | 6 | 6 | - | 3.5 | 4.7 |
| | 96 | 6 | 6 | 6 | - | - | 3.8 | 6 | 6 | 6 | - | 3 | 3.8 |
| | 120" | 6 | 6 | 6 | - | - | 3.1 | 6 | 6 | 6 | - | - | 3.1 |
| | 134" | 6 | 5.5 | 6 | - | - | - | 6 | 6 | 6 | - | - | - |
| 100 | 60" | 6 | 6 | | - | 3.5 | 4.9 | 6 | 6 | 6 | - | 3.5 | 4.9 |
| | 78 | 6 | 6 | | - | - | 3.8 | 6 | 6 | 6 | - | - | 3.8 |
| | 96 | 6 | 6 | | - | - | 3.1 | 6 | 6 | 6 | - | - | 3.1 |
| | 120" | 5 | 5 | 5.5 | - | - | - | 5 | 5.5 | 6 | - | - | - |
| 195 | 60" | 5 | 5 | 5.5 | - | - | - | 5 | 5.5 | 6 | - | - | - |
| | 66" | 4.5 | 4.5 | 5 | - | - | - | 5 | 5 | 5.5 | - | - | - |

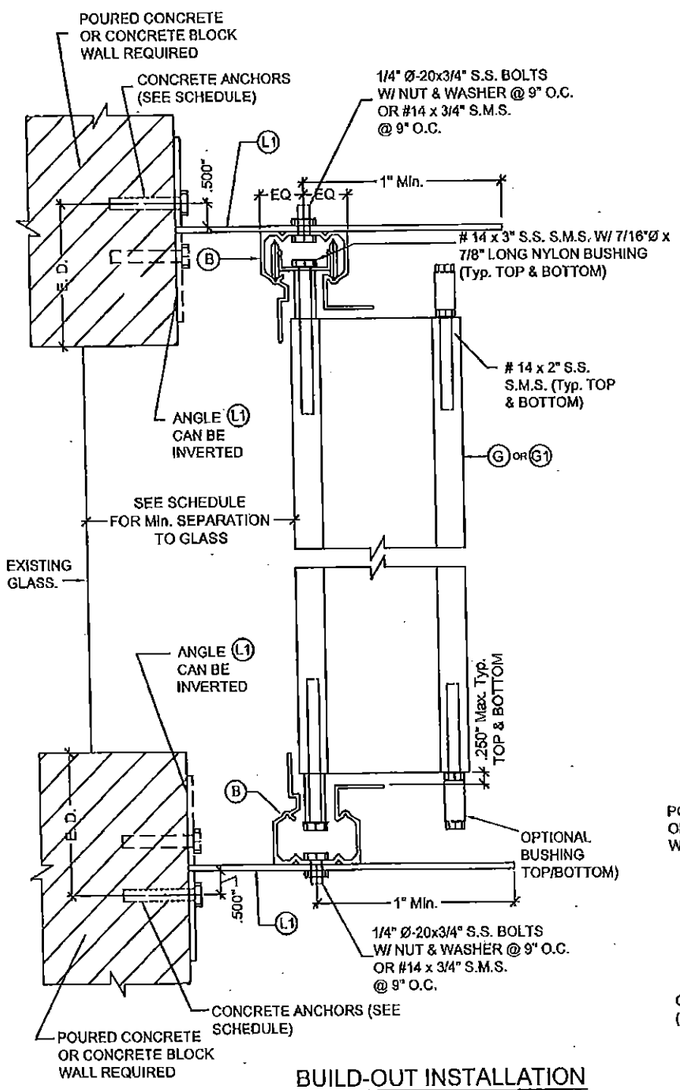


BUILD-OUT INSTALLATION
SECTION C

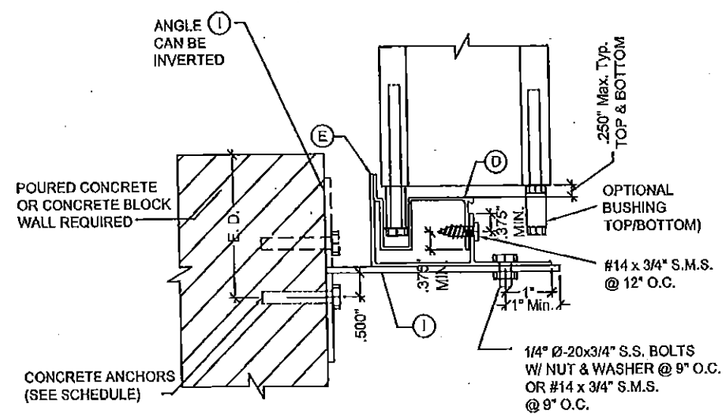


BUILD-OUT INSTALLATION
SECTION C1

PRODUCT RENEWED
as complying with the Florida
Building Code
Acceptance No 16-0209.18
Expiration Date 03/31/2021
By
Miami Dade Product Control

PRODUCT REVISED
as complying with the Florida
Building Code
Acceptance No 15-0615.11
Expiration Date 03/31/2016
By
Miami Dade Product Control

MIAMI DADE COUNTY

YIPING WANG, P.E.
FLORIDA REGISTRATION
LPE #35983
C.A.N. 28677
No. 35983
STATE OF FLORIDA
PROFESSIONAL ENGINEER

JUN 05 2015

| REVISIONS | | |
|---|---|---|
| NO | DATE | DESCRIPTION |
| 1 | 08/05/10 | AS PER RECO COMMENTS |
| 2 | 02/25/12 | UPDATE TO 2010 FBC |
| 3 | 02/20/15 | UPDATE TO 2014 FBC |


MCY ENGINEERING, INC.
GLAZING CONSULTANTS
8501 SW 124 AVE. STE 205A
MIAMI, FL 33183
P: 305.271.0117
F: 786.573.5063
www.MCYEngineering.com
MCY.Engineering@Att.net


SYSTEM 2 ALUMINUM ACCORDION SHUTTER

SHUTTERS DEPOT, LLC. (H.P.M.A. #41)
1776 W. 41 STREET
HIALEAH, FL 33012
Tel: (305) 822 - 3575 Fax: (305) 822 - 3731

| | |
|---|---|
| DATE | 5-13-10 |
| SCALE | |
| DRAWN | E. D. |
| PROJECT | 10-04 |

DRAWING NO. AD10-30

5 OF 10

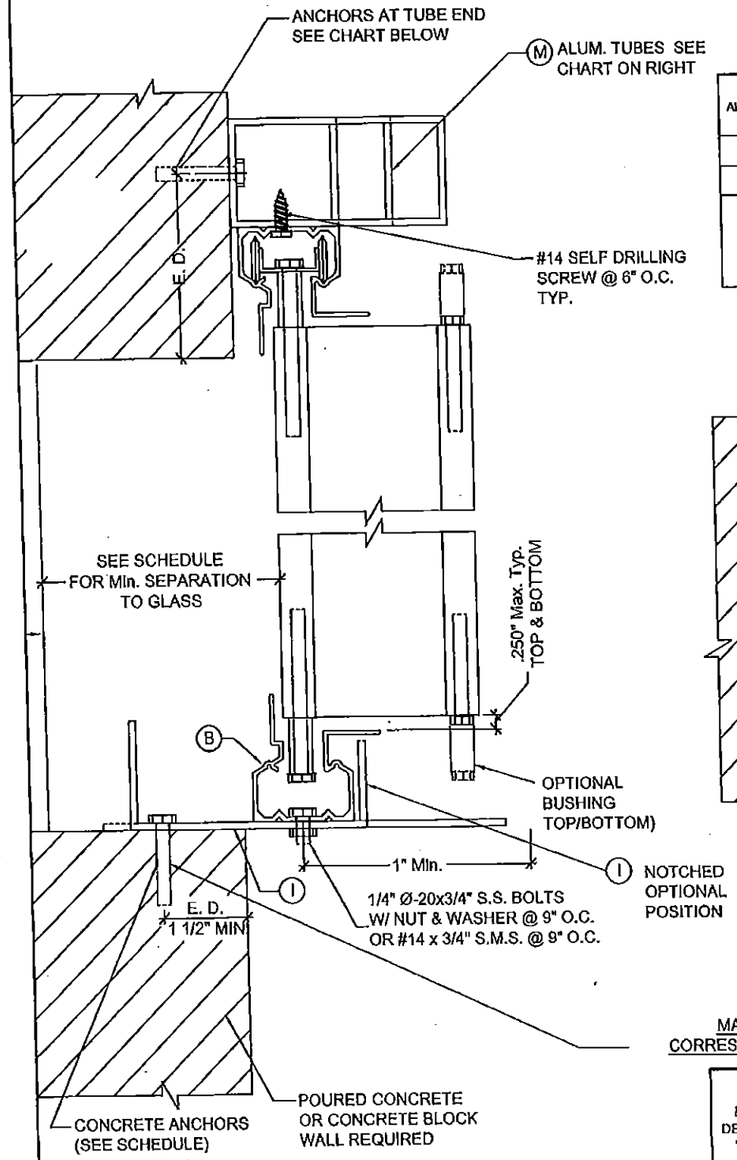


BUILD-OUT INSTALLATION
SECTION M

| ALUM. TUBE SIZE | OPEN'G WIDTH | MAX. HEIGHT | DESIGN LOAD (PSF) | |
|---|---|---|---|---|
| | | | ANCHOR TYPE "A" | ANCHOR TYPE "C" |
| 2"x2"x1/8" | 42" | 88" | 65 | 65 |
| 2"x3"x1/8" | 60" | 88" | 65 | 65 |
| 2"x4"x1/8" | 78" | 88" | 57.3 | 62 |
| | 78" | 84" | 60 | 65 |
| | 78" | 77" | 65 | 65 |

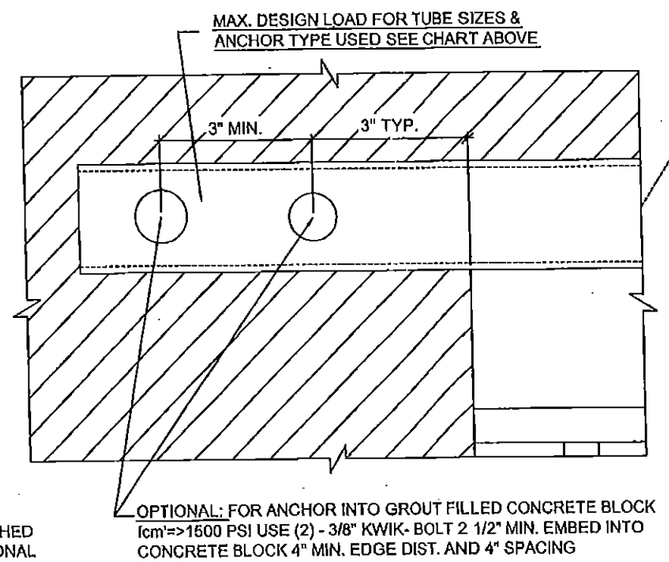


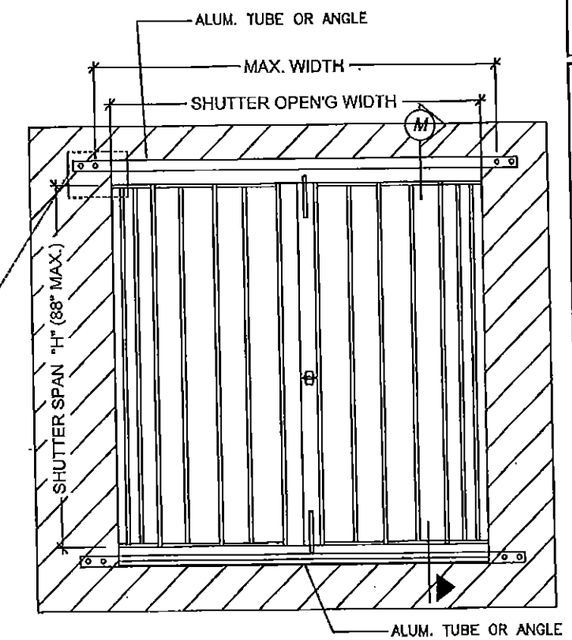


TOP / BOTTOM (OPTIONAL)

MAXIMUM DESIGN PRESSURE RATING "Pd" (PSF) AND CORRESPONDING MAXIMUM ANCHOR SPACING (in.) SCHEDULE. +

| MAXIMUM DESIGN LOAD "Pd" (PSF) | SHUTTER SPAN (INCH) | SECTION M BOTTOM SUBSTRATE CONCRETE ANCHOR SPACING (in.) | |
|---|---|---|---|
| | | ANCHOR TYPE A | ANCHOR TYPE C |
| 65 | 60" | 8.5 | 9 |
| | 72" | 7 | 7.5 |
| | 84" | 6 | 6.5 |
| | 88" | 5.5 | 6 |

PRODUCT RENEWED
as complying with the Florida Building Code
Acceptance No 16-0209.18
Expiration Date 03/31/2021
By [signature]
Miami Dade Product Control

PRODUCT REVISED
as complying with the Florida Building Code
Acceptance No 15-0615.11
Expiration Date 03/31/2016
By [signature]
Miami Dade Product Control
MIAMI DADE COUNTY

YIRING WANG, P.E.
FLORIDA REGISTRATION
P.E. #55983
C.A.N. 28677
No. 55983
STATE OF FLORIDA
PROFESSIONAL ENGINEER

JUN 05 2015

REVISIONS

| NO | DATE | DESCRIPTION |
|---|---|---|
| 1 | 09/05/10 | AS PER SCCO COMMENTS |
| 2 | 03/25/12 | UPDATE TO 2010 FBC |
| 3 | 03/20/15 | UPDATE TO 2014 FBC |


MCY ENGINEERING, INC.
GLAZING CONSULTANTS
8501 SW 124 AVE STE 205A
MIAMI, FL 33183
P: 305.271.0117
F: 786.573.5063
www.MCYEngineering.com
MCY.Engineering@Att.net


SYSTEM 2 ALUMINUM ACCORDION SHUTTER
SHUTTERS DEPOT, LLC. (H.P.M.A. #41)
1776 W. 41 STREET
HIALEAH, FL 33012
Tel: (305) 822 - 3575 Fax: (305) 822 - 3731

| | |
|---|---|
| DATE | 8-13-10 |
| SCALE | |
| DRAWN | E. D. |
| PROJECT | 10-04 |
| DRAWING NO. | AD10-30 |

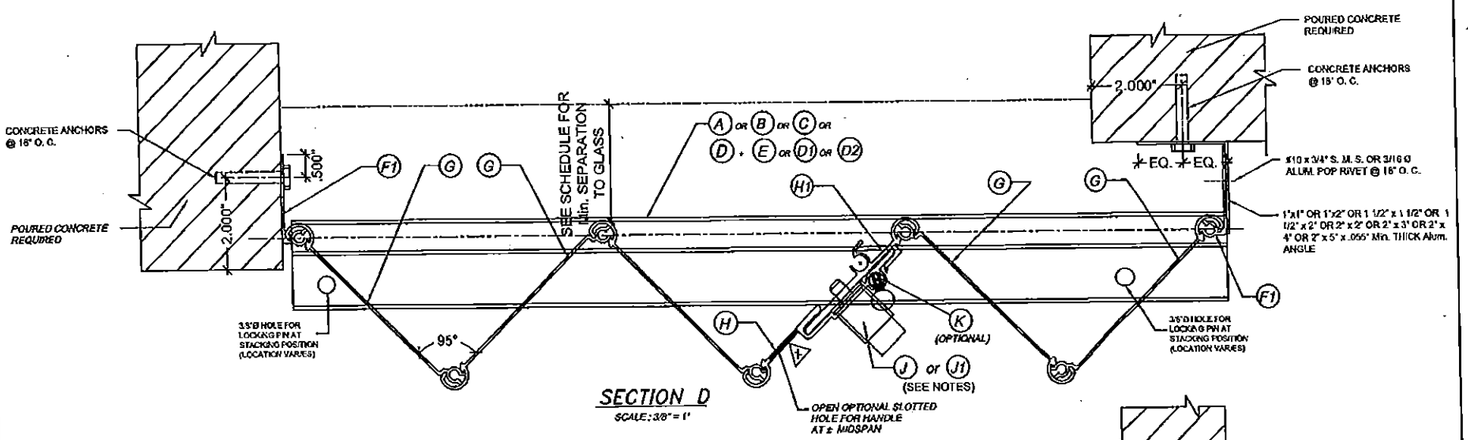


SECTION D
SCALE: 3/8" = 1"

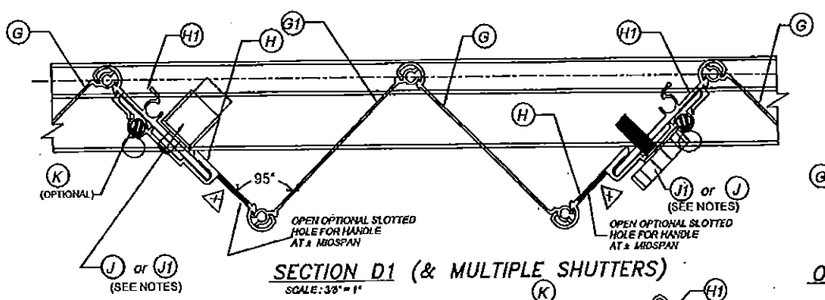


SECTION D1 (& MULTIPLE SHUTTERS)
SCALE: 3/8" = 1"

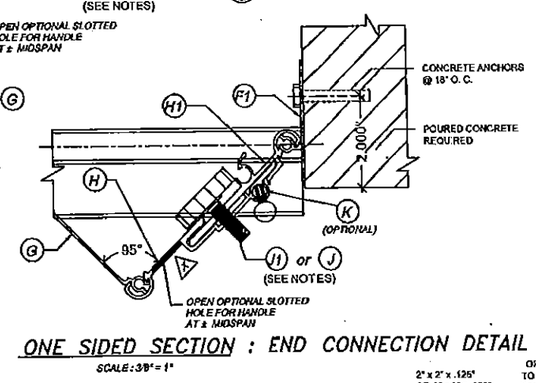


ONE SIDED SECTION : END CONNECTION DETAIL
SCALE: 3/8" = 1"

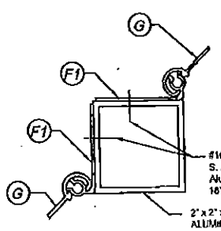


SECTION E
SCALE: 3/8" = 1"

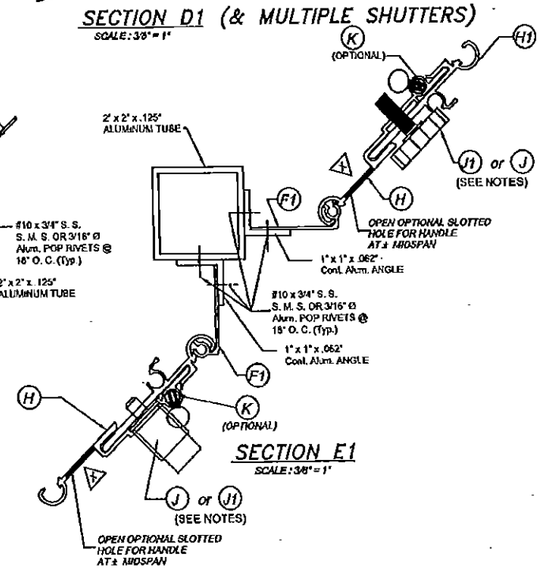


SECTION E1
SCALE: 3/8" = 1"

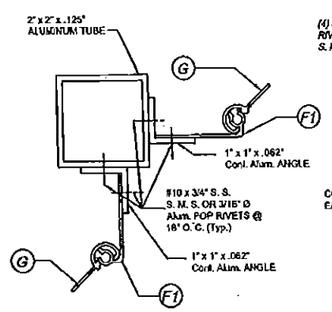


SECTION E2
SCALE: 3/8" = 1"

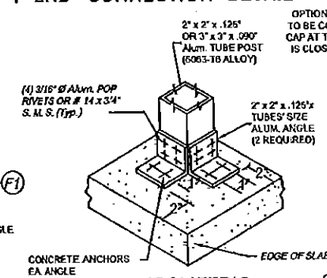


ISOMETRIC (CORNER POST)
(Typ. AT TOP & BOTTOM SLABS)

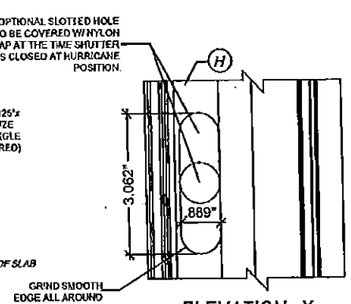


ELEVATION X

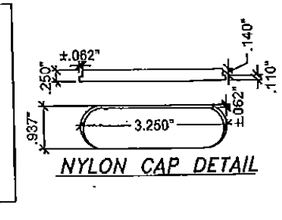


NYLON CAP DETAIL

## NOTES FOR LOCKING OF (H) & (H1)

1-PUSH BOTTOM LOCK (J) MAY BE USED FOR INSTALLATIONS SECURED FROM THE OUTSIDE OR INSIDE OF SHUTTER. WHEN INSTALLING (J) FROM THE OUTSIDE, A 7/8"Ø HOLE SHALL BE DRILLED AT (H) AND (J) MUST BE RIVETED FROM THE BACK OF (H) TO THE FRONT W/ (2)3/16"Ø ALUM. POP RIVETS. A 3/8"Ø HOLE MUST THEN BE DRILLED AT (H1) TO ALLOW FOR (J)'S PIN TO PASS THRU. WHEN INSTALLING (J) FROM THE INSIDE, (J) MUST BE RIVETED TO (H1) W/ (2)3/16"Ø ALUM. POP RIVETS. A 3/8"Ø HOLE MUST THEN BE DRILLED THRU (H) AND (H1) TO ALLOW FOR (J)'S PIN TO PASS THRU.

2-5/16"x1" LOCK (J1) MAY BE USED ALTERNATIVELY TO (J) LOCK FOR INSTALLATIONS SECURED FROM THE OUTSIDE OR INSIDE OF SHUTTER. IN THIS CASE, A 5/16"Ø HOLE SHALL BE DRILLED THRU (H) AND (H1). HOLE DRILLED TO (H1) SHALL BE TAPPED TO ACCEPT 18 THREADS PER INCH MACHINE SCREW.

NOTE:
END CONDITIONS SHOWN CAN BE INTERCHANGEABLE.

PRODUCT RENEWED
as complying with the Florida Building Code
Acceptance No 16-0209.18
Expiration Date 03/31/2021
By Miami Dade Product Control

PRODUCT REVISED
as complying with the Florida Building Code
Acceptance No 15-0615.11
Expiration Date 03/31/2016
By Miami Dade Product Control
MIAMI DADE COUNTY

YIPING WANG, P.E.
FLORIDA REGISTRATION
PE #55983
CA#-28677
No. 55983
STATE OF FLORIDA
PROFESSIONAL ENGINEER

JUN 05 2015

| REVISIONS | | | |
|---|---|---|---|
| NO. | DATE | DESCRIPTION | |
| 1 | 09/05/10 | AS PER BCCO COMMENTS | |
| 2 | 03/25/12 | UPDATE TO 2010 FBC | |
| 3 | 03/20/15 | UPDATE TO 2014 FBC | |


MCY ENGINEERING, INC.
GLAZING CONSULTANTS
8501 SW 124 AVE. STE 205A MIAMI, FL 33183
P: 305.271.0117
F: 786.573.5063
www.MCYEngineering.com
MCY.Engineering@att.net


SYSTEM 2 ALUMINUM ACCORDION SHUTTER
SHUTTERS DEPOT, LLC. (H.P.M.A. #41)
1776 W. 41 STREET
HIALEAH, FL 33012
Tel: (305) 822 - 3575 Fax: (305) 822 - 3731

| | |
|---|---|
| DATE | 5-13-10 |
| SCALE | |
| DRAWN | K. D. |
| PROJECT | 10-04 |
| DRAWING NO. | AD10-30 |
| | 7 OF 10 |

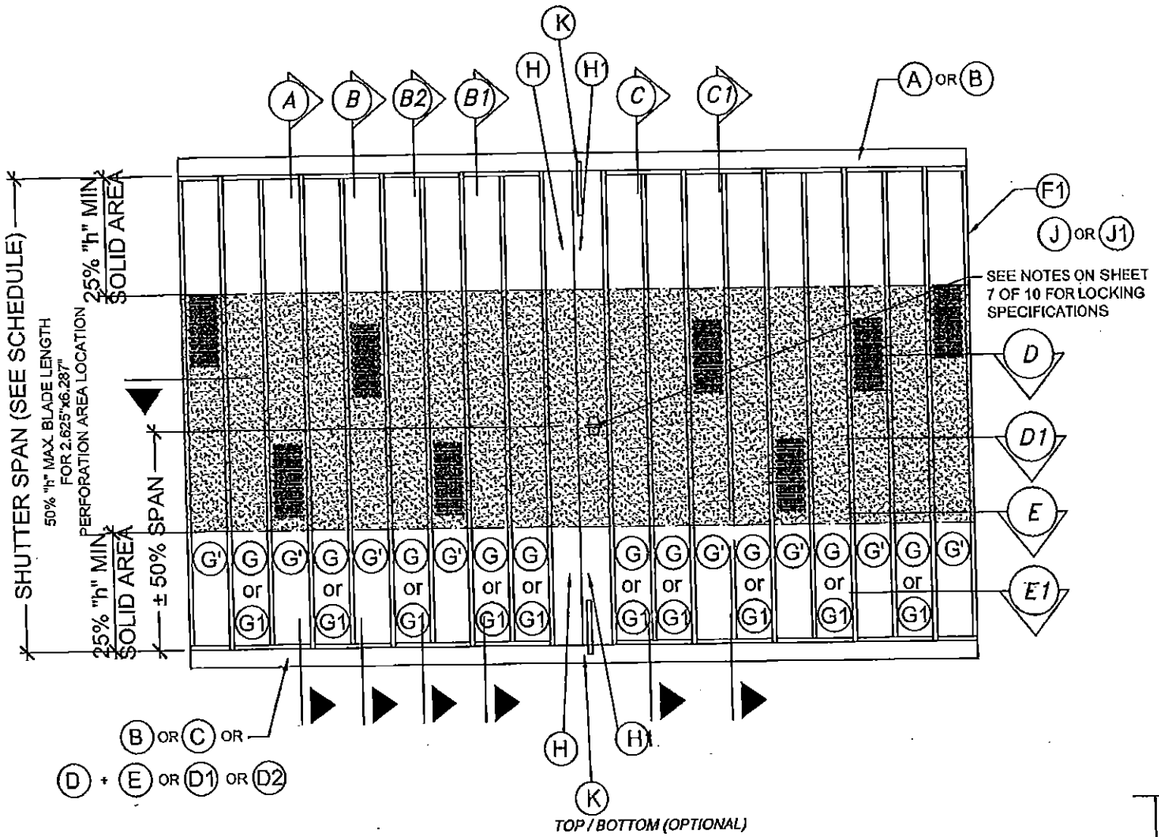


TYPICAL ELEVATION

## GENERAL LIMITATIONS AND CONDISTIONS OF USE FOR G OR G1 BLADE ACCORDIAN SHUTTER SYSTEM WORKING IN UNISON WITH G' BLADES.

1. MAXIMUM SHUTTER SPAN AND PRESSURE RATING, MAXIMUM ANCHOR SPACING AND MINIMUM SEPARATION TO GLASS FOR G' AND G1' WORKING IN UNISON WITH G AND G1 ARE AS PER SCHEDULES ON SHEET 3, 4, 5 & 9.
2. MAXIMUM PERFORATION AREA AT G', G1' IS ±2.625" x 6.28" AND MUST BE LOCATED WITHIN THE CENTRAL 50% OF THE BLADE SPAN.

   PERFORATED BLADES G, G1 MUST BE SOLID AT THE TOP AND BOTTOM 25% OF BLADES SPAN.
3. PERFORATED BLADES G', G1' SHALL BE INSTALLED AT EVERY OTHER BLADE (FREQUENCY).
4. CENTERMATES H, H1 MUST ALWAYS BE ACCOMPANIED BY TWO SOLID BLADES G, G1 AT EITHER SIDE OF EACH CENTERMATE.
5. STARTERS AND CENTERMATES MUST BE ALWAYS SOLID.
6. STARTERS CONNECTION TO EXISTING BUILDING OR TO END/CORNER TUBES MUST BE AS PER DETAILS INDICATED ON SHEET 7.

SECTION S-S THRU G MALE/FEMALE BLADE

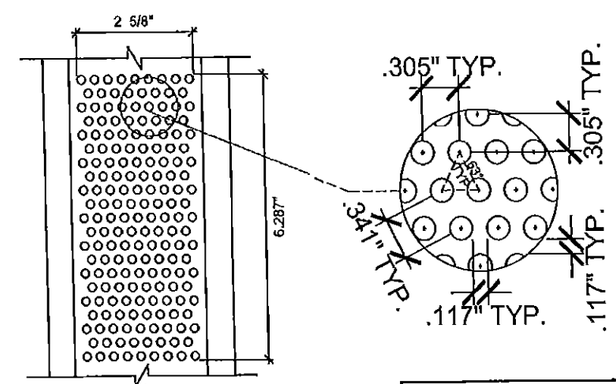


TYPICAL G' PERFORATED BLADE ELEVATION

TYPICAL SHUTTER PLAN

PRODUCT RENEWED
as complying with the Florida Building Code
Acceptance No 16-0209.18
Expiration Date 03/31/2021
By
Miami Dade Product Control

PRODUCT REVISED
as complying with the Florida Building Code
Acceptance No 15-0615.11
Expiration Date 03/31/2016
By
Miami Dade Product Control

MIAMI DADE COUNTY

YIPING WANG, P.E.
FLORIDA REGISTRATION
PE #55983
C.A.N. 28677
No. 55983
STATE OF FLORIDA
PROFESSIONAL ENGINEER

| REVISIONS | | |
|---|---|---|
| NO. | DATE | DESCRIPTION |
| 1 | 06/05/10 | AS PER BCCO COMMENTS |
| 2 | 03/25/12 | UPDATE TO 2010 FBC |
| 3 | 03/20/15 | UPDATE TO 2014 FBC |


MCY ENGINEERING, INC.
GLAZING CONSULTANTS
8501 SW 124 AVE STE 205A MIAMI, FL 33183
P: 305.271.0117
F: 786.573.5063
www.MCYEngineering.com
MCY.Engineering@Att.net


SYSTEM 2 ALUMINUM ACCORDION SHUTTER

SHUTTERS DEPOT, LLC. (H.P.M.A. #41)
1776 W. 41 STREET
HIALEAH, FL 33012
Tel: (305) 822 - 3575 Fax: (305) 822 - 3731

| | |
|---|---|
| DATE | 8-13-10 |
| SCALE | |
| DRAWN | K. D. |
| PROJECT | 10-04 |
| DRAWING NO. | AD10-30 |

8 OF 10

JUN 05 2015

# LIGHT DUTY SHUTTER WALL MOUNT, CEILING AND FLOOR INSTALLATIONS W/ A1, A2, A3 TRACKS, CENTERMATE HL & BLADES G, G1

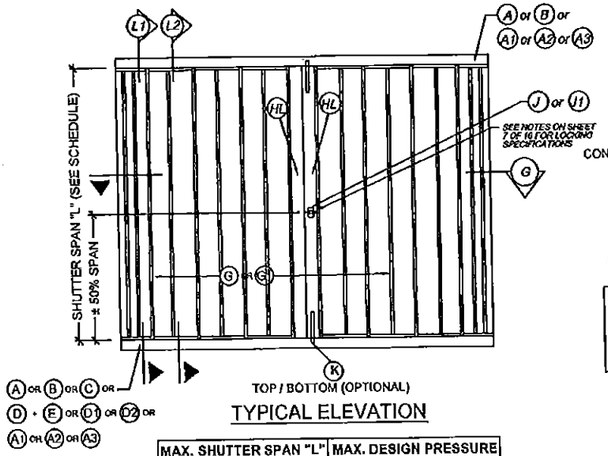


TYPICAL ELEVATION

| MAX. SHUTTER SPAN "L" | MAX. DESIGN PRESSURE |
|---|---|
| 60" | +/- 76 PSF |
| 108" | +/- 70 PSF |

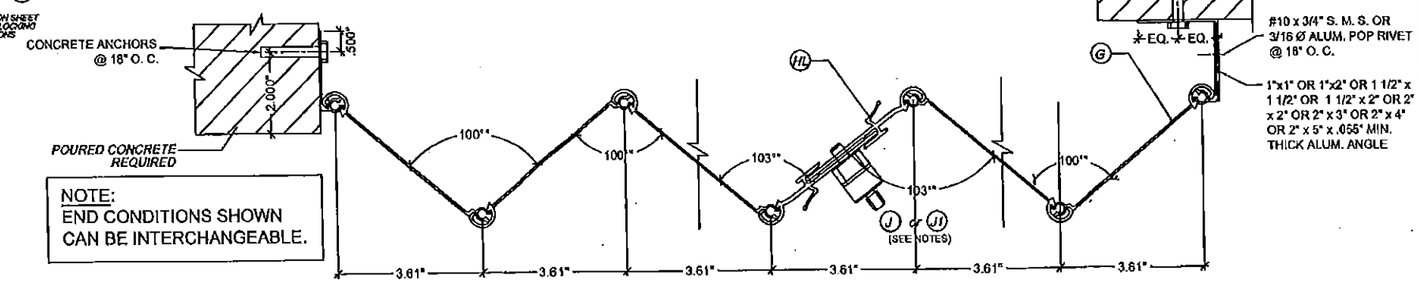


NOTE:
END CONDITIONS SHOWN CAN BE INTERCHANGEABLE.

SECTION G-G

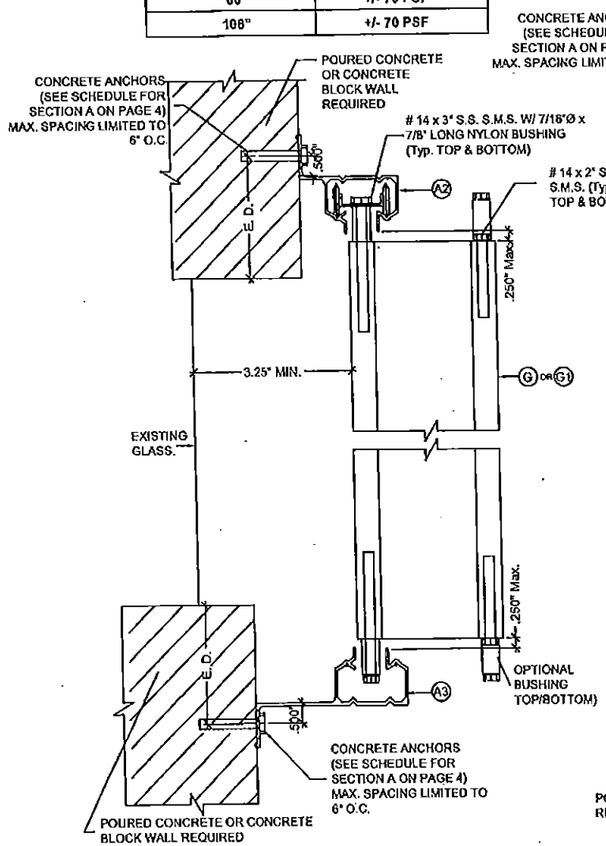


WALL MOUNTING INSTALLATION
SECTION L1
SCALE : 3/8" = 1"

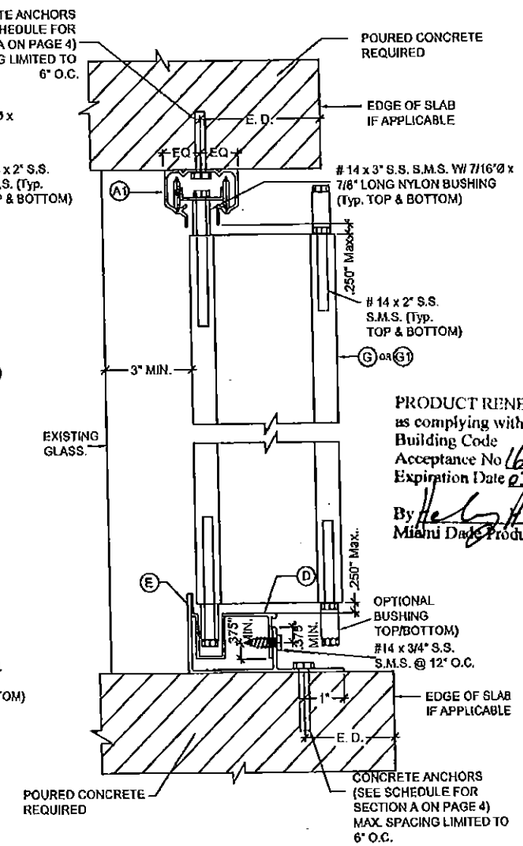


CEILING & FLOOR MOUNTING INSTALLATION
SECTION L2
SCALE : 3/8" = 1"

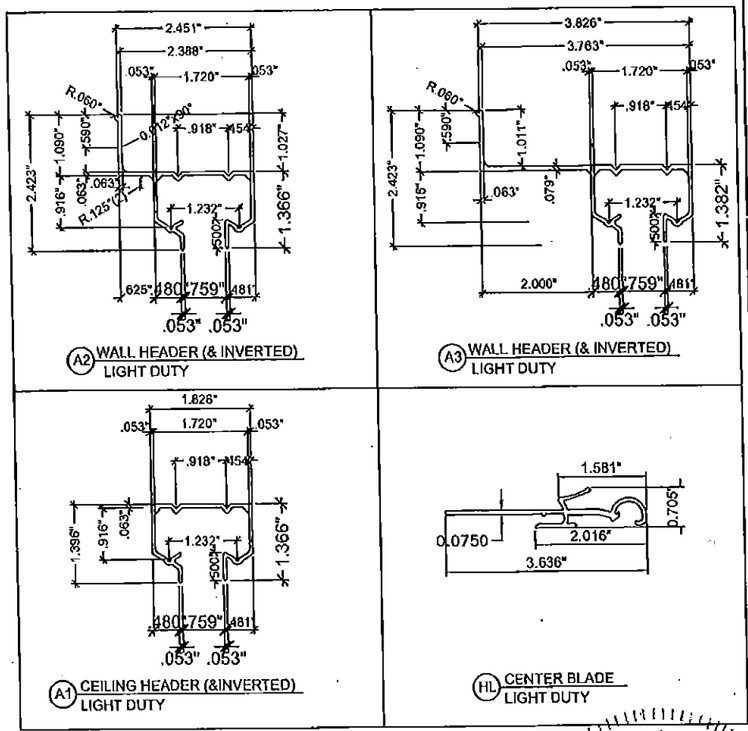


PRODUCT RENEWED
as complying with the Florida Building Code
Acceptance No 16-0209.18
Expiration Date 03/31/2021
By
Miami Dade Product Control

NEW SHEET

PRODUCT REVISED
as complying with the Florida Building Code
Acceptance No 15-0615.11
Expiration Date 03/31/2016
By
Miami Dade Product Control

MIAMI DADE COUNTY

YIRING WANG, P.E.
FLORIDA REGISTRATION
PE C 55983
C.A.N. 28677
No. 55983
STATE OF FLORIDA
PROFESSIONAL ENGINEER

JUN 05 2015

| REVISIONS | | |
|---|---|---|
| NO | DATE | DESCRIPTION |
| 1 | 09/05/11 | AS PER BCCO COMMENTS |
| 2 | 03/25/12 | UPDATE TO 2010 FBC |
| 3 | 03/20/15 | UPDATE TO 2014 FBC |


MCY ENGINEERING, INC.
GLAZING CONSULTANTS
8501 SW 124 AVE. STE 205A
MIAMI, FL. 33183
P: 305.271.0117
F: 786.573.5063
MCY.Engineering@Att.net
www.MCYEngineering.com


SYSTEM 2 ALUMINUM ACCORDION SHUTTER
SHUTTERS DEPOT, LLC. (H.P.M.A. #41)
1776 W. 41 STREET
HIALEAH, FL 33012
Tel: (305) 822 - 3575 Fax: (305) 822 - 3731

| | |
|---|---|
| DATE | 6-13-10 |
| SCALE | |
| DRAWN | E. D. |
| PROJECT | 10-04 |
| DRAWING NO. | AD10-30 |
| | 9 OF 10 |

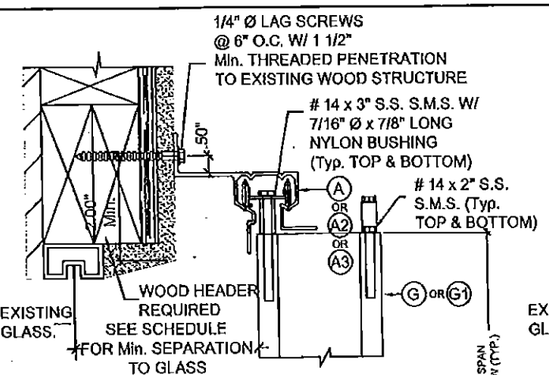


ALTERNATIVE 1

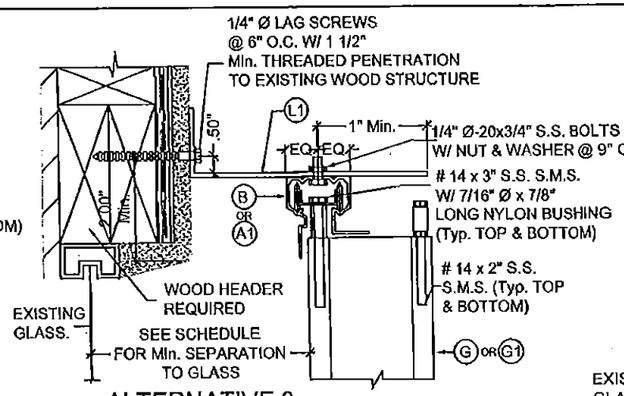


ALTERNATIVE 3

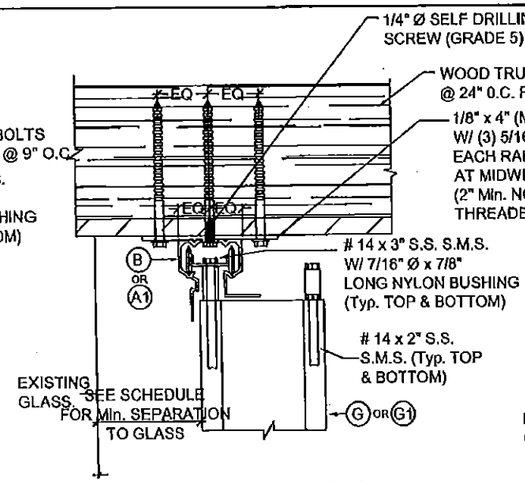


ALTERNATIVE 1

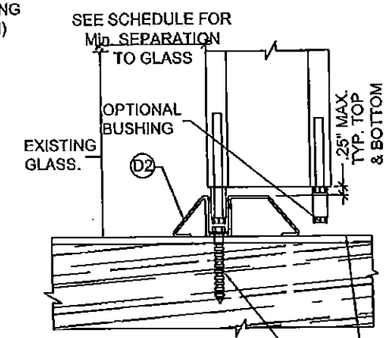


ALTERNATIVE 3

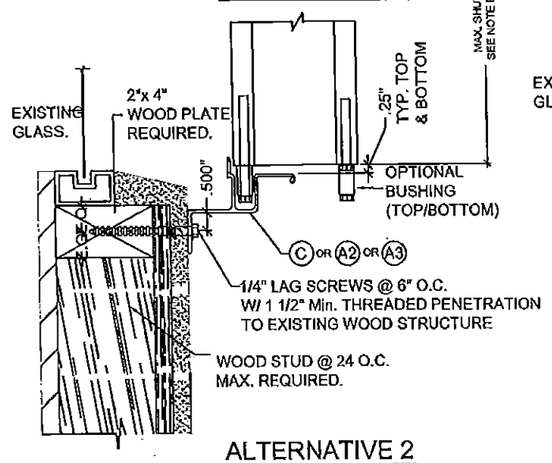


ALTERNATIVE 2

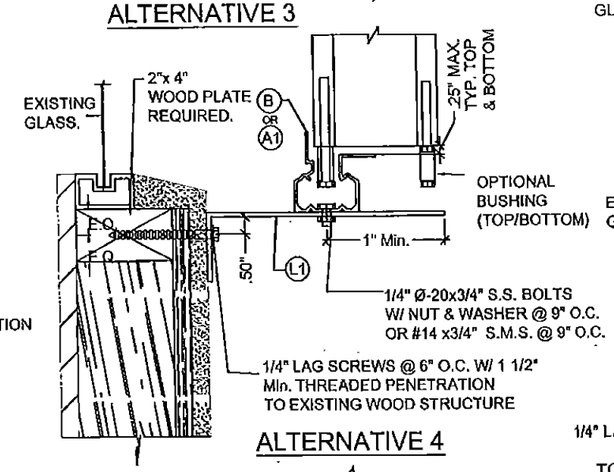


ALTERNATIVE 4

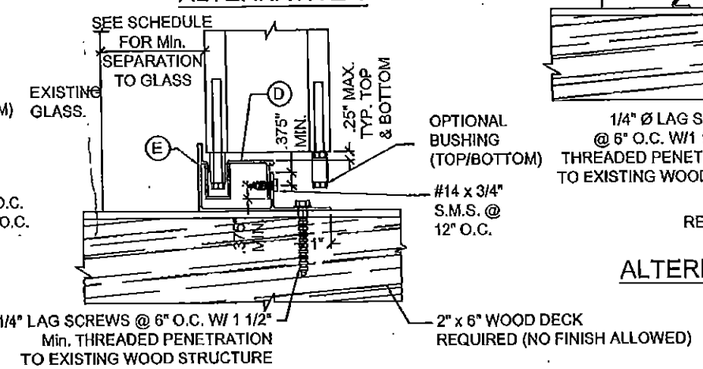


ALTERNATIVE 2

WALL MOUNTING INSTALLATION (OFFSET)

SECTIONS B

SCALE: 1/4"=1"

NOTE:
WALL/FLOOR/CEILING MOUNTING SECTIONS CAN BE COMBINED IN ANY WAY TO SUIT ANY INSTALLATION.

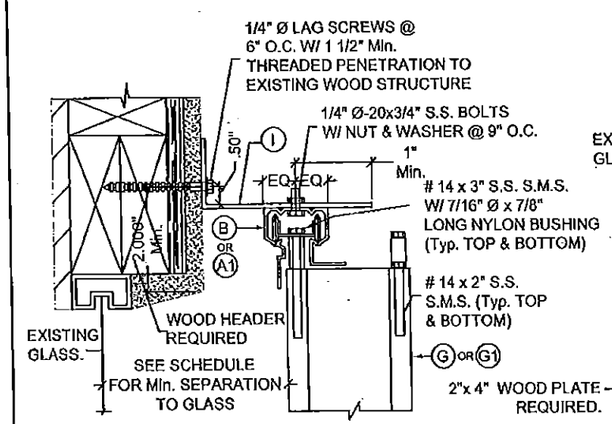


ALTERNATIVE 5

WALL MOUNTING INSTALLATION (OFFSET)

SECTIONS A

SCALE: 1/4"=1"

INSTALLATION DETAILS ON EXISTING WOOD BUILDINGS

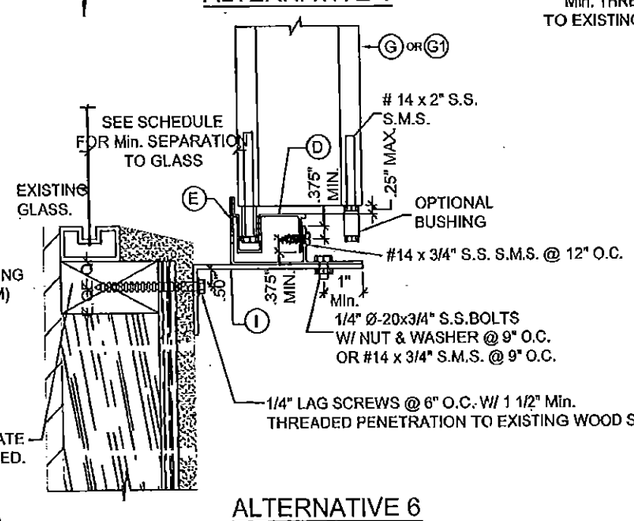


ALTERNATIVE 6

**NOTES:**

1. INSTALLATIONS ARE ONLY VALID FOR INSTALLATIONS WITH DESIGN WIND LOADS LESS THAN OR EQUAL TO 70 p.s.f. AND 9'-0" Max. SHUTTER SPAN.
2. FOR NEW WOOD FRAME CONSTRUCTION: WOOD MEMBERS TO BE SOUTHERN PINE No. 2, W/ SPECIFIC DENSITY OF 0.55 OR EQUAL/GREATER.

PRODUCT RENEWED
as complying with the Florida
Building Code
Acceptance No. 16-0209.18
Expiration Date 03/31/2021
By
Miami Dade Product Control

PRODUCT REVISED
as complying with the Florida
Building Code
Acceptance No. 15-0615.11
Expiration Date 03/31/2016
By
Miami Dade Product Control

MIAMI DADE COUNTY

YIRIO WANG
FLORIDA REGISTRATION
REG. 55983
C.A.N. 28677
No. 55983
STATE OF FLORIDA
PROFESSIONAL ENGINEER

JUN 05 2015

REVISIONS

| NO | DATE | DESCRIPTION |
|---|---|---|
| 1 | 09/06/10 | AS PER BCCO COMMENTS |
| 2 | 03/25/12 | UPDATE TO 2010 FBC |
| 3 | 03/20/15 | UPDATE TO 2014 FBC |


MCY ENGINEERING, INC.
GLAZING CONSULTANTS
8501 SW 124 AVE. STE. 205A
MIAMI, FL. 33183
P: 305.271.0117
F: 786.573.5063
www.MCYEngineering.com
MCY.Engineering@Att.net


SYSTEM 2 ALUMINUM ACCORDION SHUTTER

SHUTTERS DEPOT, LLC. (H.P.M.A. #41)
1776 W. 41 STREET
HIALEAH, FL 33012
Tel: (305) 822 - 3575 Fax: (305) 822 - 3731

| | |
|---|---|
| DATE | 5-15-10 |
| SCALE | |
| DRAWN | E. D. |
| PROJECT | 10-04 |
| DRAWING NO. | AD10-30 |

10 OF 10