MIAMI-DADE COUNTY
DEPARTMENT OF REGULATORY AND ECONOMIC RESOURCES (RER)
BOARD AND CODE ADMINISTRATION DIVISION

MIAMI–DADE COUNTY
PRODUCT CONTROL SECTION
11805 SW 26 Street, Room 208
T (786) 315–2590 F (786) 315–2599
www.miamidade.gov/economy

NOTICE OF ACCEPTANCE (NOA)

Aldora Aluminum & Glass Products, Inc.
11500 Miramar Parkway, Suite 300
Miramar, FL 33025

SCOPE:

This NOA is being issued under the applicable rules and regulations governing the use of construction materials. The documentation submitted has been reviewed and accepted by Miami-Dade County RER–Product Control Section to be used in Miami–Dade County and other areas where allowed by the Authority Having Jurisdiction (AHJ).

This NOA shall not be valid after the expiration date stated below. The Miami–Dade County Product Control Section (In Miami-Dade County) and/ or the AHJ (in areas other than Miami–Dade County) reserve the right to have this product or material tested for quality assurance purposes. If this product or material fails to perform in the accepted manner, the manufacturer will incur the expense of such testing and the AHJ may immediately revoke, modify, or suspend the use of such product or material within their jurisdiction. RER reserves the right to revoke this acceptance, if it is determined by Miami–Dade County Product Control Section that this product or material fails to meet the requirements of the applicable building code.

This product is approved as described herein, and has been designed to comply with the Florida Building Code, including the High Velocity Hurricane Zone.

DESCRIPTION: Series "K2LM" 10'0" Outswing Glazed Aluminum Entrance Door – L.M.I.

APPROVAL DOCUMENT: Drawing No. **W04–91**, titled "Series K2LM Alum. Out–Swing Entrance Door", sheets 1 through 11 of 11, dated 10/25/04, with revision "**G**" dated 12/15/14, prepared by Al–Farooq Corporation, signed and sealed by Javad Ahmad, P. E., bearing the Miami–Dade County Product Control Renewal stamp with the Notice of Acceptance number and Expiration date by the Miami–Dade County Product Control Section.

MISSILE IMPACT RATING: Large and Small Missile Impact Resistant

LABELING: Each unit shall bear a permanent label with the manufacturer's name or logo, city, state, series, and following statement: "Miami–Dade County Product Control Approved", unless otherwise noted herein.

REVISION of this NOA shall be considered after a renewal application has been filed and there has been no change in the applicable building code negatively affecting the performance of this product.

TERMINATION of this NOA will occur after the expiration date or if there has been a revision or change in the materials, use, and/ or manufacture of the product or process. Misuse of this NOA as an endorsement of any product, for sales, advertising or any other purposes shall automatically terminate this NOA. Failure to comply with any section of this NOA shall be cause for termination and removal of NOA.

ADVERTISEMENT: The NOA number preceded by the words Miami–Dade County, Florida, and followed by the expiration date may be displayed in advertising literature. If any portion of the NOA is displayed, then it shall be done in its entirety.

INSPECTION: A copy of this entire NOA shall be provided to the user by the manufacturer or its distributors and shall be available for inspection at the job site at the request of the Building Official.

This NOA **renews NOA No. 15–0106.05** and consists of this page 1 and evidence pages E–1, E–2 and E–3, as well as approval document mentioned above.

The submitted documentation was reviewed by **Jorge M. Plasencia, P. E.**

MIAMI-DADE COUNTY APPROVED

AP 4/5/16

Aldora Aluminum & Glass Products, Inc.

NOTICE OF ACCEPTANCE: EVIDENCE SUBMITTED

A. DRAWINGS

1. Manufacturer's die drawings and sections.
   (Submitted under NOA No. 05–0301.04)
2. Drawing No. **W04–91**, titled "Series K2LM Alum. Out–Swing Entrance Door", sheets 1 through 11 of 11, dated 10/25/04, with revision "**G**" dated 12/15/14, prepared by Al–Farooq Corporation, signed and sealed by Javad Ahmad, P. E.
   (Submitted under NOA No. 15–0106.05)

B. TESTS

1. Test reports on: 1) Air Infiltration Test per FBC, TAS 202–94
   2) Uniform Static Air Pressure Test Loading per FBC, TAS 202–94
   3) Water Resistance Test per FBC, TAS 202–94
   4) Large Missile Impact Test per FBC, TAS 201–94
   5) Cyclic Wind Pressure Loading per FBC, TAS 203–94
   6) Forced Entry Test, per FBC 2411.3.2.1 (b) and TAS 202–94

   along with marked–up drawings and installation diagram of an aluminum outswing door, all prepared by Fenestration Testing Laboratory, Inc., Test Reports No.'s **FTL–4267, FTL–4238, FTL–4257** and **FTL–4276**, dated 06/18/04, 06/30/04, 08/12/04 and 08/13/04 all respectively, signed and sealed by Edmundo J. Largaespada, P. E.
   (Submitted under NOA No. 05–0301.04)

C. CALCULATIONS:

1. Anchor verification calculations and structural analysis, complying with **FBC 5th Edition (2014)**, prepared by Al–Farooq Corporation, dated 12/16/14, signed and sealed by Javad Ahmad, P. E.
   (Submitted under NOA No. 15–0106.05)
2. **Glazing complies with ASTM E1300–04/ 09.**

D. QUALITY ASSURANCE

1. Miami–Dade Department of Regulatory and Economic Resources (RER)

E. MATERIAL CERTIFICATIONS

1. Notice of Acceptance No. **14–0423.17** issued to **Eastman Chemical Company (MA)** for their "**Saflex Clear and Color Glass Interlayers**" dated 06/19/14, expiring on 05/21/16.
2. Notice of Acceptance No. **14–0423.16** issued to **Eastman Chemical Company (MA)** for their "**Saflex HP Clear or Color Glass Interlayers**" dated 06/19/14, expiring on 04/14/18.

Jorge M. Plasencia, P. E.
Product Control Unit Supervisor
NOA No. 16–0216.01
Expiration Date: May 12, 2017
Approval Date: April 14, 2016

NOTICE OF ACCEPTANCE: EVIDENCE SUBMITTED

E. MATERIAL CERTIFICATIONS (CONTINUED)

3. Notice of Acceptance No. **13–1126. 20** issued to **Allnex USA, Inc.** for their "**Uvekol S Laminated Glass Interlayer**", dated 02/20/14, expiring on 02/08/19.

F. STATEMENTS

1. Email from manufacturer requesting a 1–year extension to allow time to perform verification test, dated 02/12/16, signed by Manny Valladares.
2. Statement letter of conformance to, of complying with **FBC 5th Edition (2014)**, and of no financial interest, dated 10/10/13, signed and sealed by Javad Ahmad, P. E.
   (Submitted under NOA No. 15–0106.05)
3. Department of State Certification of **ALDORA ALUMINUM & GLASS PRODUCTS, INC.** as a for foreign profit corporation, active and organized under the laws of the State of Florida, dated March 10, 2015 and filed by the Secretary of State.
   (Submitted under NOA No. 15–0106.05)
4. Statement letter dated 08/21/13, issued by Aldora Aluminum & Glass Products, Inc. of legally purchase of asset and rights of **NOA No. 12–0731.06** from SMI Aluminum System, LLC and requesting that said NOA be issued under their name, signed by Manny Valladares, for and on behalf of Aldora Aluminum & Glass Products, Inc.
   (Submitted under NOA No. 13–1021.03)
5. Letter from owners of existing NOA stating that they have sold all assets to the applicant, that they no longer manufacture the product and relinquish their rights to the current **NOA No. 12–0731.06**, dated 08/21/13, signed by Mr. Manny Valladares, for and on behalf of SMI Aluminum Systems, LLC.
   (Submitted under NOA No. 13–1021.03)
6. Assignment & Assumption agreement dated July 26, 2013 between Aldora Holdings LLC, SMI Aluminum Systems, LLC, Architectural Glass Products, LLC (each an "Assignor" and collectively, the "Assignors") and Aldora Holdco, Inc. (the "Assignee") signed by Leon Silverstein, Aldora Holdings LLC manager; Leon Silverstein, SMI Aluminum Systems, LLC, manager; Leon Silverstein, Architectural Glass Products, LLC manager and Scott Hauncher, VP Aldora Holdco, Inc.
   (Submitted under NOA No. 13–1021.03)
7. Bill of Sale dated July 26, 2013, delivered by Aldora Holdco, Inc. transferring assets to Aldora Aluminum & Glass Products, Inc., signed by Mr. Scott Hauncher, Vice President, Aldora Holdco, Inc.
   (Submitted under NOA No. 13–1021.03)
8. Department of State Certification of **ALDORA ALUMINUM & GLASS PRODUCTS, INC.** as a for foreign profit corporation, active and organized under the laws of the State of Delaware, dated July 18, 2013 and signed by Jeffrey W. Bullock, Secretary of State.
   (Submitted under NOA No. 13–1021.03)

Jorge M. Plasencia, P. E.
Product Control Unit Supervisor
NOA No. 16-0216.01
Expiration Date: May 12, 2017
Approval Date: April 14, 2016

NOTICE OF ACCEPTANCE: EVIDENCE SUBMITTED

F. STATEMENTS (CONTINUED)

9. Department of State Certification of **ALDORA ALUMINUM & GLASS PRODUCTS, INC.** as a for foreign profit corporation, active and organized under the laws of the State of Florida, dated July 20, 2013 and signed by T. Burgh, Secretary of State.
(Submitted under NOA No. 13–1021.03)

10. Laboratory compliance letter for Test Reports No.'s **FTL–4267**, **FTL–4238**, **FTL–4257**, **FTL–4276**, all issued by Fenestration Testing Laboratory, Inc., dated 16/18/04, 06/30/04, 08/12/04 and 08/13/04 all respectively, signed and sealed by Edmundo J. Largaespada, P. E.
(Submitted under NOA No. 05–0301.04)

11. Proposal issued by the Product Control, dated 04/01/04, signed by Jaime D. Gascon, P. E.
(Submitted under NOA No. 05–0301.04)

G. OTHERS

1. Notice of Acceptance No. **15–0106.05**, issued to Aldora Aluminum & Glass Products, Inc. for their Series **"K2LM 10'0" Outswing Glazed Aluminum Entrance Door – L.M.I.**", approved on 04/02/15 and expiring on 05/12/16.

2. One year approval, subjected to successful verification test.

Jorge M. Plasencia, P. E.
Product Control Unit Supervisor
NOA No. 16–0216.01
Expiration Date: May 12, 2017
Approval Date: April 14, 2016

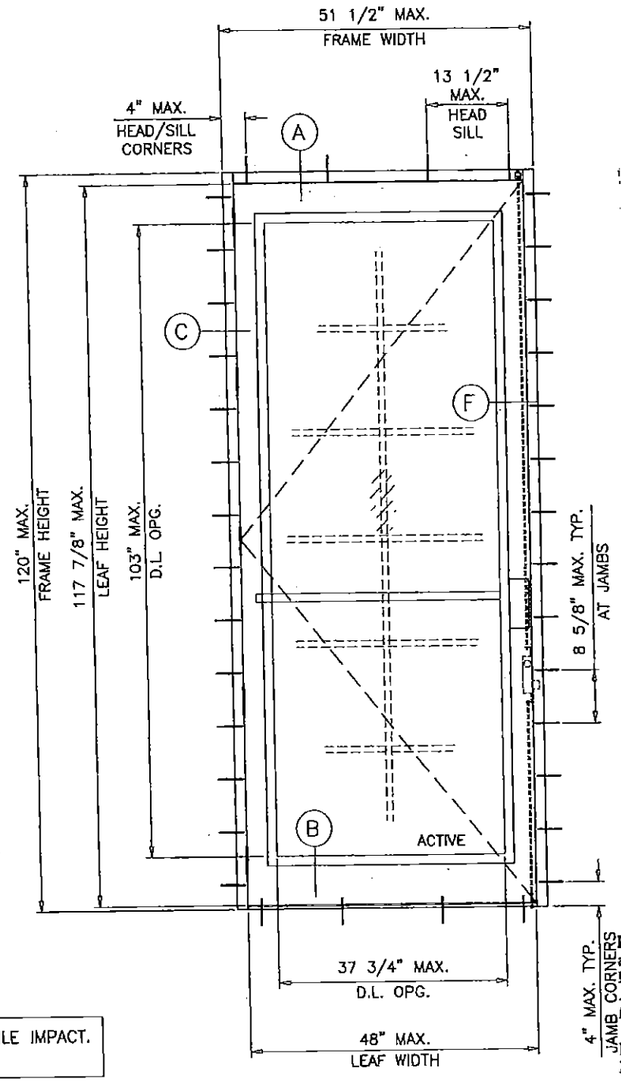

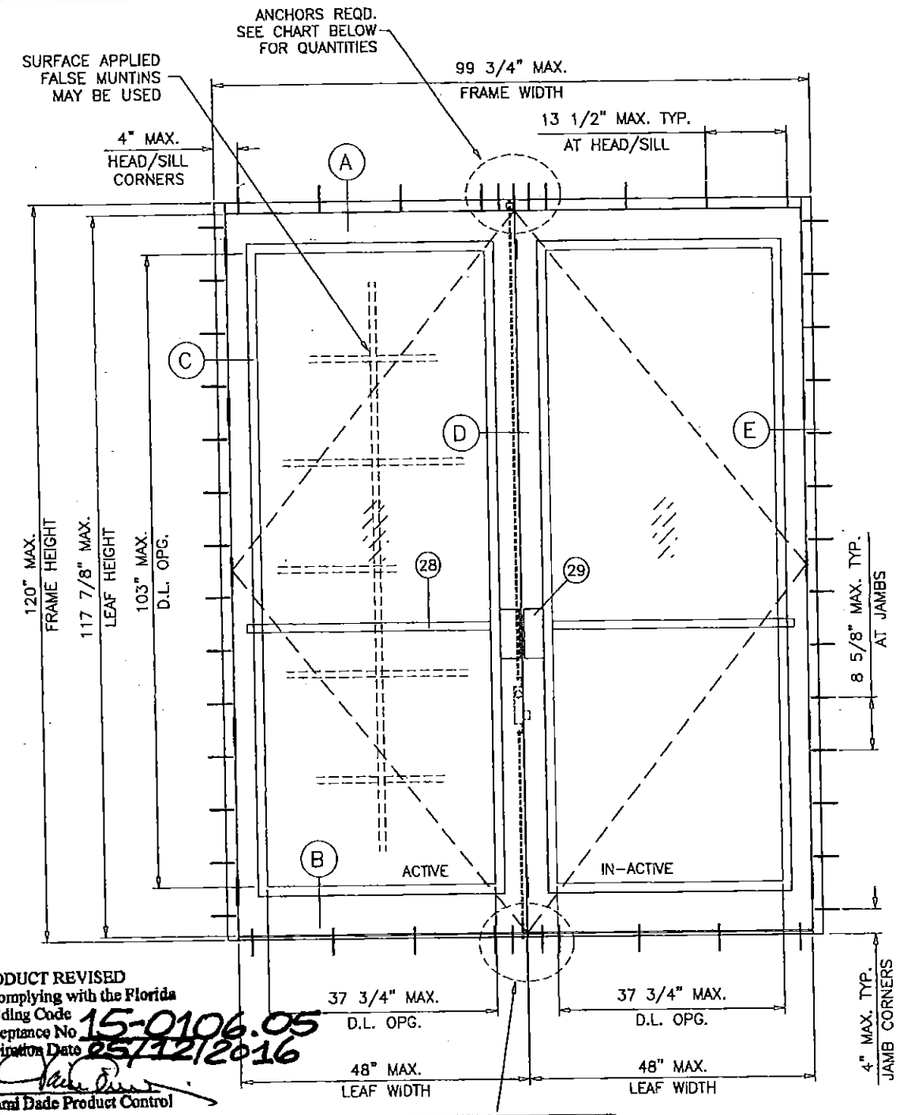

PRODUCT REVISED
as complying with the Florida Building Code
Acceptance No. 15-0106.05
Expiration Date 05/12/2016
By
Miami Dade Product Control

THESE DOORS ARE RATED FOR LARGE & SMALL MISSILE IMPACT. SHUTTERS ARE NOT REQUIRED.

SERIES K2LM ALUMINUM OUT-SWING DOOR

USE BUMPER THRESHOLD (#5A+5B) WHEN WATER INFILTRATION REQUIREMENTS ARE NOT APPLICABLE.

USE HIGH-RISE THRESHOLD COVER (#5A+5C) WHEN WATER INFILTRATION REQUIREMENTS MUST BE MET.

SEE CHARTS ON SHEET 2 FOR DESIGN LOAD CAPACITY OF SINGLE (X) AND DOUBLE (XX) LEAF DOORS W/O TRANSOMS.

SEE CHARTS ON SHEET 3 FOR DESIGN LOAD CAPACITY OF SINGLE (O/X) AND DOUBLE (O/XX) LEAF DOORS WITH TRANSOMS.

SEE CHARTS ON SHEETS 5 & 6 FOR DESIGN LOAD CAPACITY OF DOOR MULLION.

USE LOWER VALUES OF DOOR MULLION CHARTS (SHEETS 5 & 6) OR DOOR CAPACITY CHARTS (SHEETS 2 & 3).

TYPICAL ELEVATIONS

NOTES:

THIS PRODUCT HAS BEEN DESIGNED AND TESTED TO COMPLY WITH THE REQUIREMENTS OF THE FLORIDA BUILDING CODE INCLUDING HIGH VELOCITY HURRICANE ZONE (HVHZ).

WOOD BUCKS BY OTHERS, MUST BE ANCHORED PROPERLY TO TRANSFER LOADS TO THE STRUCTURE.

ANCHORS SHALL BE AS LISTED, SPACED AS SHOWN ON DETAILS, ANCHORS EMBEDMENT TO BASE MATERIAL SHALL BE BEYOND WALL DRESSING OR STUCCO.

ANCHORING OR LOADING CONDITIONS NOT SHOWN IN THESE DETAILS ARE NOT PART OF THIS APPROVAL.

A LOAD DURATION INCREASE IS USED IN DESIGN OF ANCHORS INTO WOOD ONLY.

MATERIALS INCLUDING BUT NOT LIMITED TO STEEL/METAL SCREWS, THAT COME INTO CONTACT WITH OTHER DISSIMILAR MATERIALS SHALL MEET THE REQUIREMENTS OF THE FLORIDA BLDG. CODE.

TOTAL NO. OF ANCHORS AT MTG. STILE ENDS	
SUBSTRATE	FOR FRAME HT. UPTO 120 IN.
WOOD	9
CONCRETE	3
METAL	3

JAVAD AHMADI
LICENSE No. 70592
STATE OF FLORIDA
PROFESSIONAL ENGINEER
Engr: JAVAD AHMADI
CIVIL
FLA. PE # 70592
C.A.N.A. 1538
DEC 16 2014

LAMINATED GLASS
LARGE MISSILE IMPACT

PRODUCT RENEWED
as complying with the Florida Building Code
NOA-No. 16-0216.01
Expiration Date 05/12/2017
By
Miami-Dade Product Control

AL-FAROOQ CORPORATION
ENGINEERS & PRODUCT DEVELOPMENT
1235 S.W. 87 AVE
MIAMI, FLORIDA 33174
TEL. (305) 264-8100 FAX. (305) 262-6978
COMP-ANL\W04-91SM

SERIES K2LM ALUM OUT-SWING ENTRANCE DOOR

Aldora Aluminum & Glass Products Inc.
11500 MIRAMAR PARKWAY SUITE 300
MIRAMAR, FL. 33025
TEL. (305) 888-6288 FAX. (305) 888-6289

revisions:			
no	date	by	description
C	02.02.11		NO CHANGE THIS SHEET
D	10.21.11		UPDATED TO 2010 FBC
F	08.12.13		MANUF. NAME REV.
G	12.15.14		UPDATED TO 2014 FBC

date: 10-25-04
scale: 1/2"=1'-0"
dr. by: HAMID
chk. by:

drawing no. W04-91

sheet 1 of 11

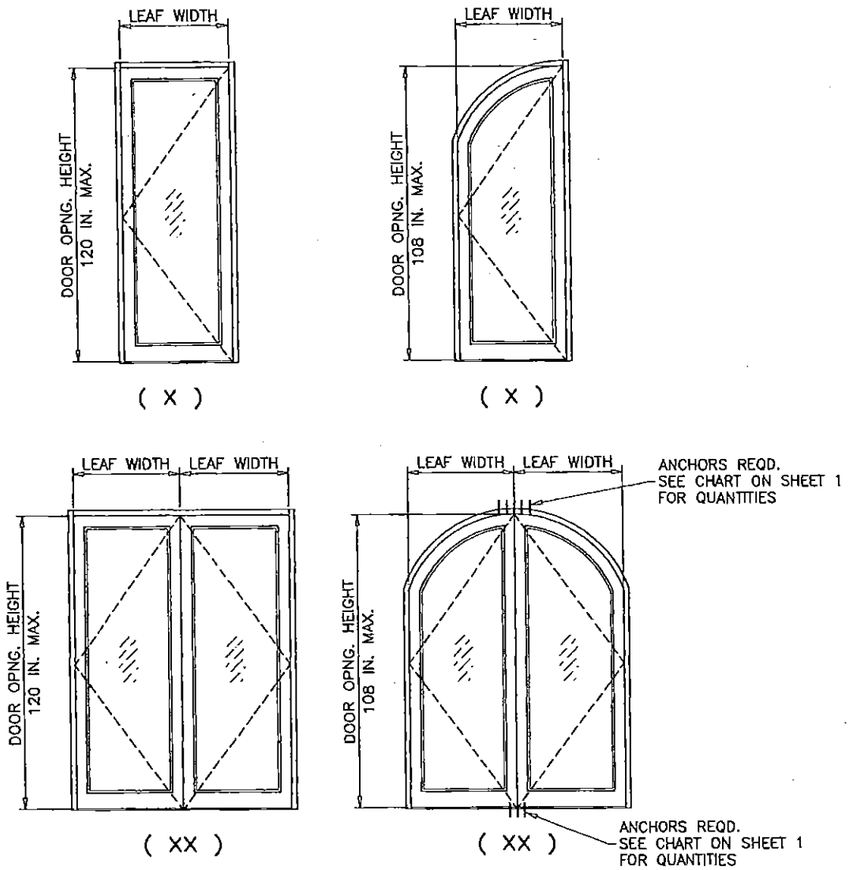

SINGLE OR DOUBLE ENTRANCE DOORS W/O TRANSOM			
NOMINAL DIMS.		DESIGN LOAD CAPACITY-PSF	
OPNG. HEIGHT INCHES	LEAF WIDTH INCHES	EXT.(+)	INT.(-)
80	30	100.0	120.0
	36	100.0	120.0
	42	100.0	120.0
	48	100.0	120.0
84	30	100.0	120.0
	36	100.0	120.0
	42	100.0	120.0
	48	100.0	120.0
96	30	100.0	120.0
	36	100.0	120.0
	42	100.0	120.0
	48	100.0	120.0
108	30	100.0	120.0
	36	100.0	120.0
	42	100.0	120.0
	48	100.0	120.0
120	30	100.0	100.0
	36	100.0	100.0
	42	100.0	100.0
	48	100.0	100.0

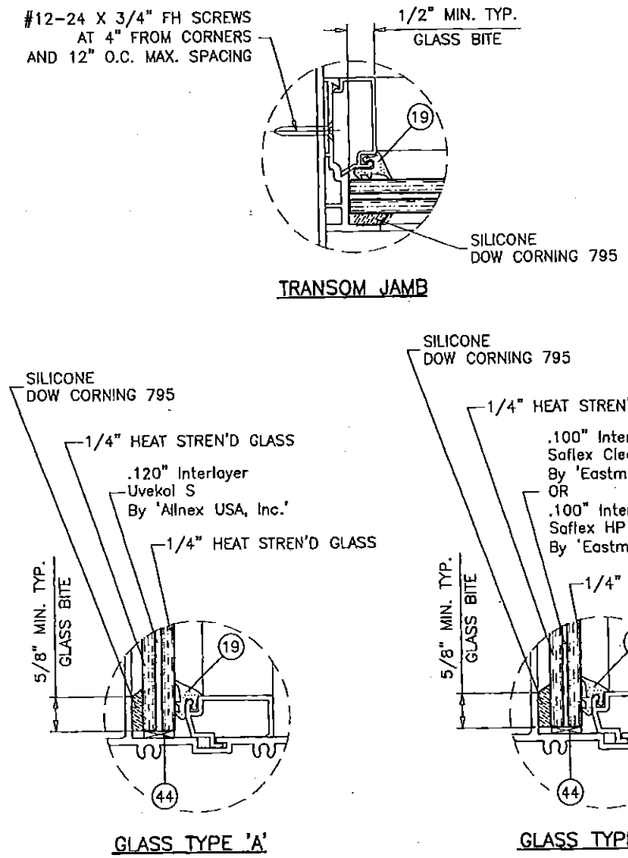

GLAZING DETAILS TRANSOM

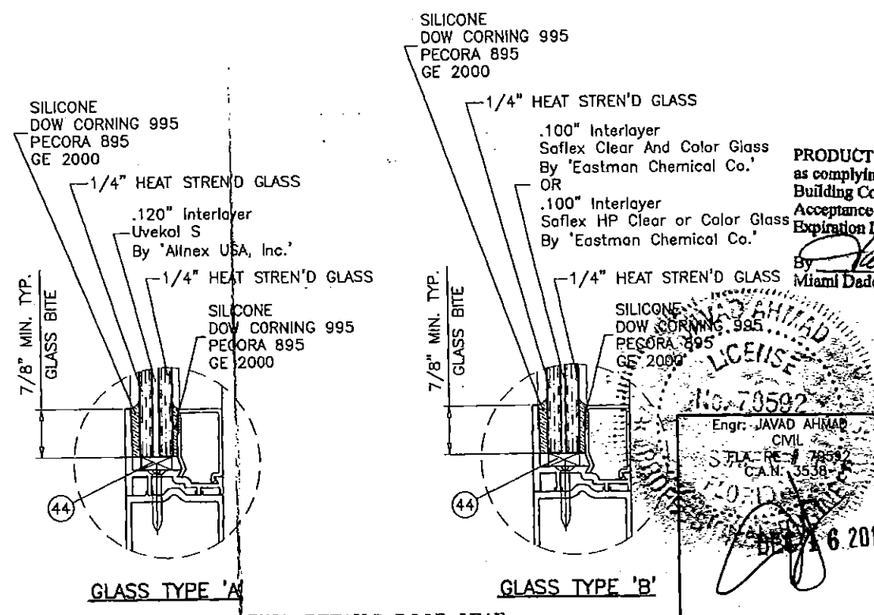

GLAZING DETAILS DOOR LEAF

NOTE:
GLASS CAPACITIES ON THIS SHEET ARE BASED ON ASTM E1300-09 (3 SEC. GUSTS) AND FLORIDA BUILDING COMMISSION DECLARATORY STATEMENT DCA05-DEC-219

PRODUCT REVISED
as complying with the Florida Building Code
Acceptance No 15-0106.05
Expiration Date 25/12/2016
By
Miami Dade Product Control

LICENSE No. 70592 STATE OF FLORIDA
Engr: JAVAD AHMAD CIVIL
S.FLA. RE: 78592 C.A.N: 3538
DEC 16 2014

PRODUCT RENEWED
as complying with the Florida Building Code
NOA-No. 16-0216.01
Expiration Date 05/12/2017
By
Miami-Dade Product Control

AL-FAROOQ CORPORATION
ENGINEERS & PRODUCT DEVELOPMENT
1235 S.W. 87 AVE
MIAMI, FLORIDA 33174
TEL (305) 264-8100 FAX. (305) 262-6978
COMP-ANL\W04-91SM

SERIES K2LM ALUM OUT-SWING ENTRANCE DOOR

Aldora Aluminum & Glass Products Inc.
11500 MIRAMAR PARKWAY SUITE 300
MIRAMAR, FL. 33025
TEL. (305) 888-6288 FAX. (305) 888-6289

revisions:

no	date	by	description
C	02.02.11		NO CHANGE THIS SHEET
D	10.21.11		NO CHANGE THIS SHEET
F	08.12.13		MANUF. NAME REV.
G	12.15.14		UPDATED TO 2014 FBC

date: 10-25-04
scale: 1/2"=1'-0"
dr. by: HAMID
chk. by:

drawing no. W04-91

SINGLE ENTRANCE DOORS WITH TRANSOM				
DESIGN LOAD CAPACITY				
NOMINAL DIMS.			WITHOUT REINF.	
OPNG. WIDTH INCHES	DOOR HEIGHT INCHES	TRANSOM HEIGHT INCHES	EXT. (+)	INT. (−)
48 MAX.	108 MAX.	60	100.0	120.0

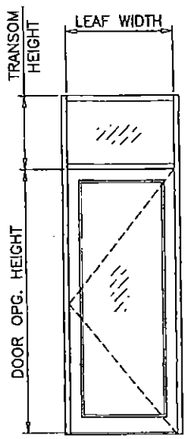

(O/X)

DOUBLE ENTRANCE DOORS WITH TRANSOM						
DESIGN LOAD CAPACITY						
NOMINAL DIMS.			WITHOUT REINF.		WITH REINF.	
OPNG. WIDTH INCHES	DOOR HEIGHT INCHES	TRANSOM HEIGHT INCHES	EXT. (+)	INT. (−)	EXT. (+)	INT. (−)
60	80	24	100.0	120.0	100.0	120.0
		30	100.0	120.0	100.0	120.0
		36	100.0	120.0	100.0	120.0
		42	100.0	120.0	100.0	120.0
		48	100.0	120.0	100.0	120.0
		54	100.0	113.7	100.0	120.0
		60	100.0	108.0	100.0	120.0
72		24	100.0	104.3	100.0	120.0
		30	97.6	97.6	100.0	120.0
		36	91.5	91.5	100.0	120.0
		42	86.0	86.0	100.0	120.0
		48	81.0	81.0	100.0	120.0
		54	76.5	76.5	100.0	120.0
84		24	75.4	75.4	100.0	120.0
		30	70.2	70.2	100.0	120.0
		36	65.6	65.6	100.0	120.0
		42	61.4	61.4	100.0	120.0
		48	57.6	57.6	100.0	120.0
96"		24	56.7	56.7	100.0	120.0
		30	52.5	52.5	100.0	120.0
		36	48.8	48.8	100.0	120.0
		42	45.4	45.4	100.0	120.0
60	84	24	100.0	120.0	100.0	120.0
		30	100.0	120.0	100.0	120.0
		36	100.0	120.0	100.0	120.0
		42	100.0	120.0	100.0	120.0
		48	100.0	116.3	100.0	120.0
		54	100.0	110.4	100.0	120.0
		60	100.0	105.0	100.0	120.0
72		24	100.0	100.5	100.0	120.0
		30	94.1	94.1	100.0	120.0
		36	88.4	88.4	100.0	120.0
		42	83.3	83.3	100.0	120.0
		48	78.6	78.6	100.0	120.0
		54	74.3	74.3	100.0	120.0
84		24	72.6	72.6	100.0	120.0
		30	67.8	67.8	100.0	120.0
		36	63.4	63.4	100.0	120.0
		42	59.4	59.4	100.0	120.0
		48	55.8	55.8	100.0	120.0
96"		24	54.6	54.6	100.0	120.0
		30	50.7	50.7	100.0	120.0
		36	47.1	47.1	100.0	120.0
		42	43.9	43.9	100.0	120.0

DOUBLE ENTRANCE DOORS WITH TRANSOM						
DESIGN LOAD CAPACITY						
NOMINAL DIMS.			WITHOUT REINF.		WITH REINF.	
OPNG. WIDTH INCHES	DOOR HEIGHT INCHES	TRANSOM HEIGHT INCHES	EXT. (+)	INT. (−)	EXT. (+)	INT. (−)
60	96	24	100.0	120.0	100.0	120.0
		30	100.0	120.0	100.0	120.0
		36	100.0	118.2	100.0	120.0
		42	100.0	112.1	100.0	120.0
		48	100.0	106.6	100.0	120.0
72		24	90.4	90.4	100.0	120.0
		30	85.2	85.2	100.0	120.0
		36	80.4	80.4	100.0	120.0
		42	76.0	76.0	100.0	120.0
		48	72.0	72.0	100.0	120.0
84		24	65.4	65.4	100.0	120.0
		30	61.3	61.3	100.0	120.0
		36	57.6	57.6	100.0	120.0
		42	54.2	54.2	100.0	120.0
		48	51.2	51.2	100.0	120.0
96"		24	49.1	49.1	100.0	120.0
		30	45.8	45.8	100.0	120.0
		36	42.8	42.8	100.0	120.0
		42	40.1	40.1	100.0	120.0
60	108	24	100.0	120.0	100.0	120.0
		30	100.0	113.9	100.0	120.0
		36	100.0	108.3	100.0	120.0
72		24	82.2	82.2	100.0	120.0
		30	77.8	77.8	100.0	120.0
		36	73.7	73.7	100.0	120.0
84		24	59.4	59.4	100.0	120.0
		30	56.0	56.0	100.0	120.0
		36	52.8	52.8	100.0	120.0
96"		24	44.7	44.7	100.0	120.0
		30	41.8	41.8	100.0	120.0
		36	39.3	39.3	100.0	120.0

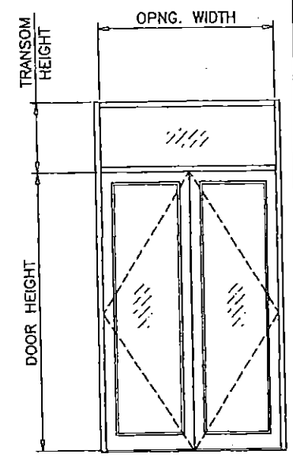

(O/XX)

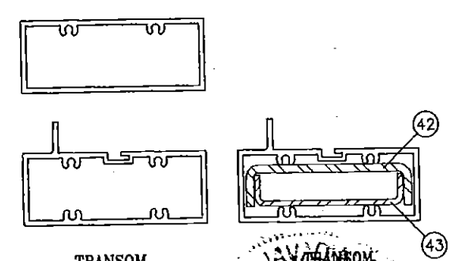

TRANSOM WITHOUT REINF.

TRANSOM WITH REINF.

NOTE:
GLASS CAPACITIES ON THIS SHEET ARE BASED ON ASTM E1300-09 (3 SEC. GUSTS) AND FLORIDA BUILDING COMMISSION DECLARATORY STATEMENT DCA05-DEC-219

PRODUCT REVISED
as complying with the Florida Building Code
Acceptance No 15-0106.05
Expiration Date 05/12/2016
By
Miami Dade Product Control

JAVED AHMAD LICENSED PROFESSIONAL ENGINEER
Engr. JAVED AHMAD
CIVIL
FLA. PE # 70592
C.A. # 3538
STATE OF FLORIDA
DEC 16 2014

PRODUCT RENEWED
as complying with the Florida Building Code
NOA-No. 16-0216.01
Expiration Date 05/12/2017
By
Miami-Dade Product Control

AL-FAROOQ CORPORATION
ENGINEERS & PRODUCT DEVELOPMENT
1235 S.W. 87 AVE
MIAMI, FLORIDA 33174
TEL. (305) 264-8100 FAX. (305) 262-6978
COMP-ANL\W04-91SM

SERIES K2LM ALUM OUT-SWING ENTRANCE DOOR

Aldora Aluminum & Glass Products Inc.
11500 MIRAMAR PARKWAY SUITE 300
MIRAMAR, FL. 33025
TEL. (305) 888-6288 FAX. (305) 888-6289

revisions:

no	date	by	description
C	02.02.11		NO CHANGE THIS SHEET
D	10.21.11		NO CHANGE THIS SHEET
F	08.12.13		MANUF. NAME REV.
G	12.15.14		UPDATED TO 2014 FBC

date: 10-25-04
scale: 1/2"=1'-0"
dr. by: HAMID
chk. by:

drawing no. W04-91

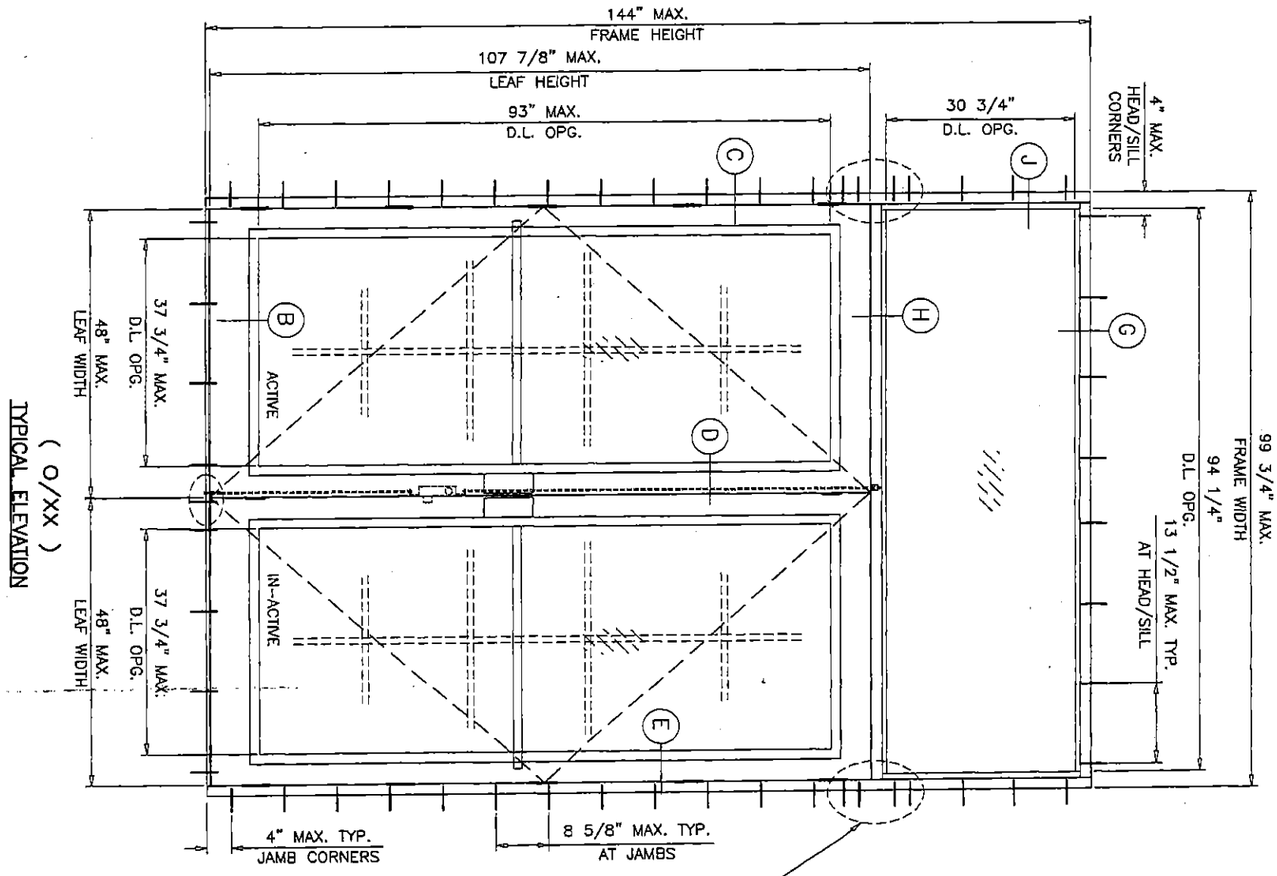

SUBSTRATE	NO. OF ANCHORS AT TRANSOM ENDS	
	WITHOUT REINF.	WITH REINF.
WOOD	5	8
CONCRETE	3	5
METAL	3	4

PRODUCT REVISED
as complying with the Florida
Building Code
Acceptance No. 15-0106.05
Expiration Date 05/12/2016
By
Miami Dade Product Control

Engr. JAVAD AHMAD
FLA. PE
C.A.N. 3538
DEC 16 2014

PRODUCT RENEWED
as complying with the Florida
Building Code
NOA-No. 16-0216.01
Expiration Date 05/12/2017
By
Miami-Dade Product Control

date:	10-25-04
scale:	1/2"=1'-0"
dr. by:	HAMID
chk. by:	

revisions:

no	date	by	description
C	02.02.11		NO CHANGE THIS SHEET
D	10.21.11		NO CHANGE THIS SHEET
F	08.12.13		MANUF. NAME REV.
G	12.15.14		UPDATED TO 2014 FBC

SERIES K2LM ALUM OUT-SWING ENTRANCE DOOR

Aldora Aluminum & Glass Products Inc.
11500 MIRAMAR PARKWAY SUITE 300
MIRAMAR, FL. 33025
TEL. (305) 888-6288 FAX. (305) 888-6289

AL-FAROOQ CORPORATION
ENGINEERS & PRODUCT DEVELOPMENT
1235 S.W. 87 AVE
MIAMI, FLORIDA 33174
TEL. (305) 264-8100 FAX. (305) 262-6978

afc

COMP-ANL\W04-91SM

drawing no. W04-91

sheet 4 of 11

DOOR MULLION LOAD CAPACITY		
NOMINAL DIMS.		LOADS–PSF
WIDTH (W)	FRAME HEIGHT	EXT.(+) & INT.(–)
24"	80"	100.0
30"		100.0
36"		100.0
42"		100.0
48"		100.0
54"		100.0
60"		100.0
24"	84"	100.0
30"		100.0
36"		100.0
42"		100.0
48"		100.0
54"		100.0
60"		100.0
24"	90"	100.0
30"		100.0
36"		100.0
42"		100.0
48"		100.0
54"		100.0
24"	96"	100.0
30"		100.0
36"		100.0
42"		100.0
48"		100.0
24"	102"	100.0
30"		100.0
36"		100.0
42"		100.0
48"		100.0
24"	108"	100.0
30"		100.0
36"		100.0
42"		100.0
24"	114"	100.0
30"		100.0
36"		100.0
42"		100.0
24"	120"	100.0
30"		100.0
36"		100.0
42"		99.7

SUBSTRATE	NO. OF ANCHORS AT DOOR MULLION
WOOD	8
CONCRETE	6
METAL	4

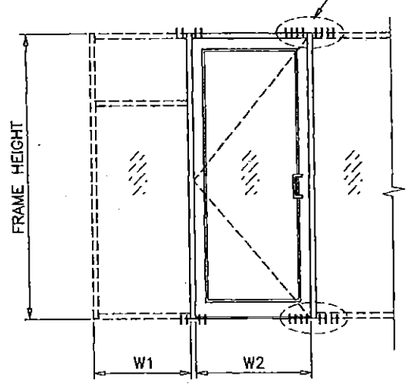

$$\text{WIDTH (W)} = \frac{W1 + W2}{2}$$

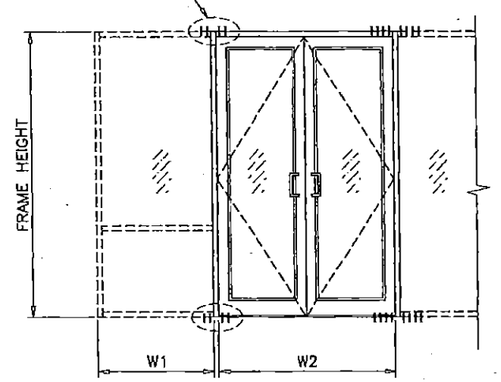

$$\text{WIDTH (W)} = \frac{W1}{2} + \frac{W2}{4}$$

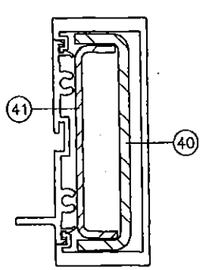

DOOR MULLION

PRODUCT REVISED
as complying with the Florida
Building Code
Acceptance No 15-0106.05
Expiration Date 05/12/2016
By
Miami Dade Product Control

JAVAD AHMAD
LICENSE
Engr: JAVAD AHMAD
No. 76592
FLA. PE # 76592
C.A.# 3538
STATE OF FLORIDA
DEC 16 2014

PRODUCT RENEWED
as complying with the Florida Building Code
NOA-No. 16-0216.01
Expiration Date 05/12/2017
By
Miami-Dade Product Control

AL-FAROOQ CORPORATION
ENGINEERS & PRODUCT DEVELOPMENT
1235 S.W. 87 AVE
MIAMI, FLORIDA 33174
TEL. (305) 264-8100 FAX. (305) 262-6978

COMP–ANL\W04–91SM

SERIES K2LM ALUM OUT–SWING ENTRANCE DOOR

Aldora Aluminum & Glass Products Inc.
11500 MIRAMAR PARKWAY SUITE 300
MIRAMAR, FL. 33025
TEL. (305) 888–6288 FAX. (305) 888–6289

revisions:

no	date	by	description
C	02.02.11		NO CHANGE THIS SHEET
D	10.21.11		NO CHANGE THIS SHEET
F	08.12.13		MANUF. NAME REV.
G	12.15.14		UPDATED TO 2014 FBC

date: 10–25–04
scale: 1/2"=1'–0"
dr. by: HAMID
chk. by:

drawing no. W04–91

DOOR MULLION LOAD CAPACITY

NOMINAL DIMS.				LOADS–PSF
DOOR WIDTH W1	SIDELITE WIDTH W2	DOOR HEIGHT A	FRAME SPAN L	EXT. (+) INT. (–)
60"	30"	80"	108"	100.0
	33"			100.0
	39"			100.0
	42"			100.0
72"	30"			100.0
	33"			100.0
	39"			100.0
	42"			100.0
84"	30"			100.0
	33"			100.0
	39"			97.3
	42"			94.7
96"	30"			96.7
	33"			94.2
	39"			89.4
	42"			87.3
60"	30"	80"	114"	100.0
	33"			100.0
	39"			100.0
	42"			99.5
72"	30"			100.0
	33"			98.4
	39"			92.7
	42"			90.1
84"	30"			91.6
	33"			89.1
	39"			84.4
	42"			82.2
96"	30"			83.5
	33"			81.4
	39"			77.4
60"	30"	80"	120"	99.7
	33"			96.4
	39"			90.4
	42"			87.6
72"	30"			88.8
	33"			86.1
	39"			81.3
	42"			79.1
84"	30"			80.0
	33"			77.9
	39"			73.9
	42"			72.1
96"	30"			72.7
	33"			71.0

DOOR MULLION LOAD CAPACITY

NOMINAL DIMS.				LOADS–PSF
DOOR WIDTH W1	SIDELITE WIDTH W2	DOOR HEIGHT A	FRAME SPAN L	EXT. (+) INT. (–)
60"	30"	84"	108"	100.0
	33"			100.0
	39"			100.0
	42"			100.0
72"	30"			100.0
	33"			100.0
	39"			100.0
	42"			100.0
84"	30"			100.0
	33"			100.0
	39"			100.0
	42"			97.8
96"	30"			100.0
	33"			97.7
	39"			92.6
	42"			90.3
60"	30"	84"	114"	100.0
	33"			100.0
	39"			100.0
	42"			100.0
72"	30"			100.0
	33"			100.0
	39"			95.4
	42"			92.6
84"	30"			94.7
	33"			92.0
	39"			87.0
	42"			84.7
96"	30"			86.5
	33"			84.2
	39"			80.0
60"	30"	84"	120"	100.0
	33"			99.0
	39"			92.6
	42"			89.7
72"	30"			91.4
	33"			88.5
	39"			83.5
	42"			81.2
84"	30"			82.5
	33"			80.3
	39"			76.0
	42"			74.1
96"	30"			75.2
	33"			73.3

DOOR MULLION LOAD CAPACITY

NOMINAL DIMS.				LOADS–PSF
DOOR WIDTH W1	SIDELITE WIDTH W2	DOOR HEIGHT A	FRAME SPAN L	EXT. (+) INT. (–)
60"	30"	96"	108"	100.0
	33"			100.0
	39"			100.0
	42"			100.0
72"	30"			100.0
	33"			100.0
	39"			100.0
	42"			100.0
84"	30"			100.0
	33"			100.0
	39"			100.0
	42"			100.0
96"	30"			100.0
	33"			100.0
	39"			100.0
	42"			100.0
60"	30"	96"	114"	100.0
	33"			100.0
	39"			100.0
	42"			100.0
72"	30"			100.0
	33"			100.0
	39"			100.0
	42"			100.0
84"	30"			100.0
	33"			100.0
	39"			95.6
	42"			92.8
96"	30"			96.5
	33"			93.7
	39"			88.5
60"	30"	96"	120"	100.0
	33"			100.0
	39"			99.8
	42"			96.5
72"	30"			100.0
	33"			96.8
	39"			90.7
	42"			87.9
84"	30"			91.0
	33"			88.2
	39"			83.1
	42"			80.7
96"	30"			83.3
	33"			81.0

DOOR MULLION LOAD CAPACITY

NOMINAL DIMS.				LOADS–PSF
DOOR WIDTH W1	SIDELITE WIDTH W2	DOOR HEIGHT A	FRAME SPAN L	EXT. (+) INT. (–)
60"	30"	108"	114"	100.0
	33"			100.0
	39"			100.0
	42"			100.0
72"	30"			100.0
	33"			100.0
	39"			100.0
	42"			100.0
84"	30"			100.0
	33"			100.0
	39"			100.0
	42"			100.0
96"	30"			100.0
	33"			100.0
	39"			98.3
60"	30"	108"	120"	100.0
	33"			100.0
	39"			100.0
	42"			100.0
72"	30"			100.0
	33"			100.0
	39"			98.8
	42"			95.5
84"	30"			100.0
	33"			97.4
	39"			91.1
	42"			88.3
96"	30"			92.9
	33"			89.9

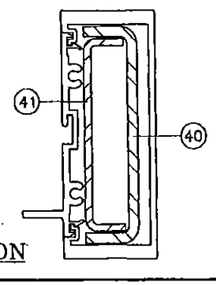

DOOR MULLION

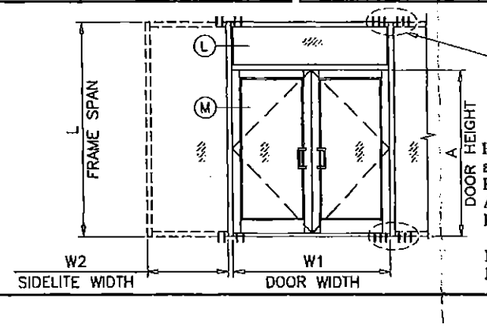

SUBSTRATE	NO. OF ANCHORS AT DOOR MULLION
WOOD	12
CONCRETE	8
METAL	6

PRODUCT REVISED
as complying with the Florida
Building Code
Acceptance No 15-0106.05
Expiration Date 05/12/2016
By
Miami Dade Product Control

JAVAD AHMAD
LICENSE
Eng: JAVAD AHMAD
FLA. PE # 70592
C.A.N. 3538
DEC 16 2014

PRODUCT RENEWED
as complying with the Florida
Building Code
NOA-No. 16-0216.01
Expiration Date 05/12/2017
By
Miami-Dade Product Control

AL-FAROOQ CORPORATION
ENGINEERS & PRODUCT DEVELOPMENT
1235 S.W. 87 AVE
MIAMI, FLORIDA 33174
TEL. (305) 264-8100 FAX. (305) 262-6978

COMP–ANL\W04–91SM

SERIES K2LM ALUM OUT–SWING ENTRANCE DOOR

Aldora Aluminum & Glass Products Inc.
11500 MIRAMAR PARKWAY SUITE 300
MIRAMAR, FL. 33025
TEL. (305) 888–6288 FAX. (305) 888–6289

revisions:

no	date	by	description
C	02.02.11		NO CHANGE THIS SHEET
D	10.21.11		NO CHANGE THIS SHEET
F	08.12.13		MANUF. NAME REV.
G	12.15.14		UPDATED TO 2014 FBC

date: 10–25–04
scale: 1/2"=1'–0"
dr. by: HAMID
chk. by:

drawing no.
W04–91

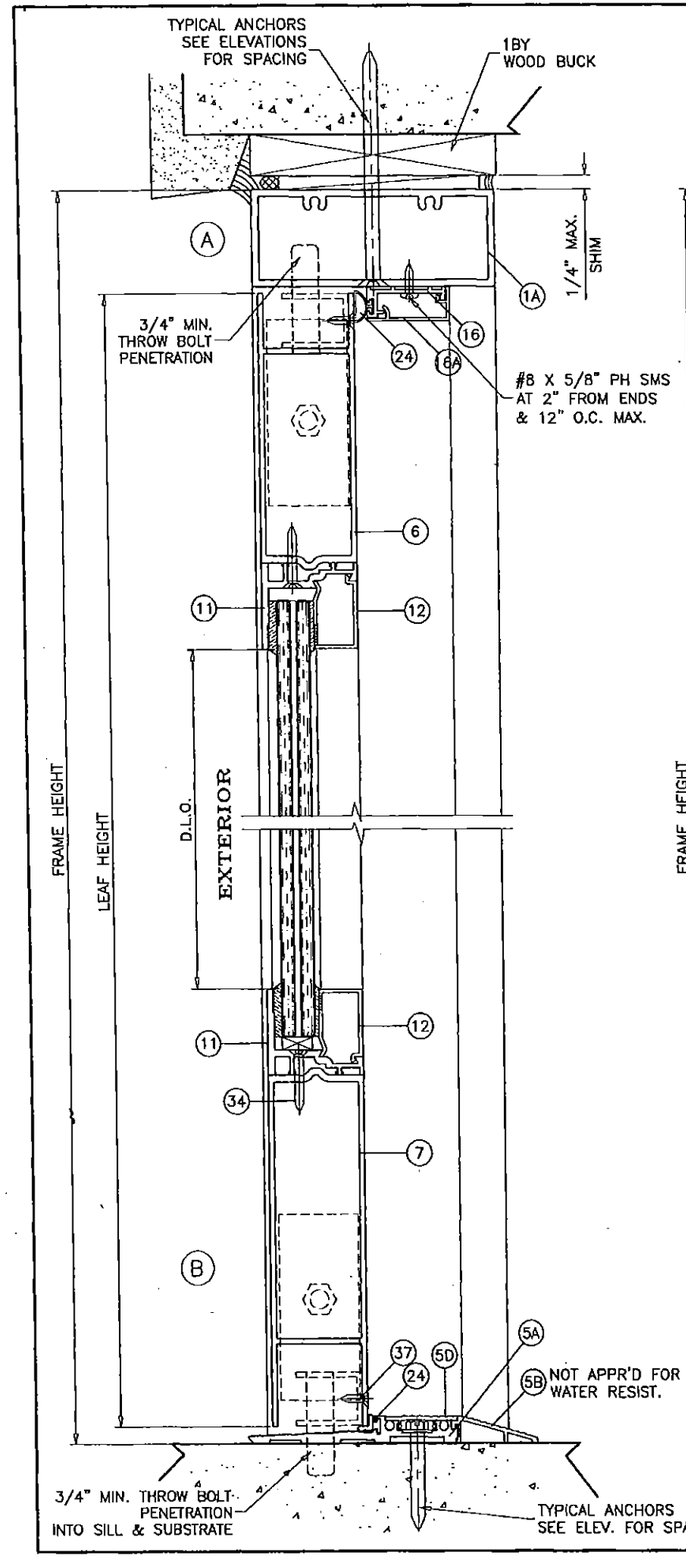

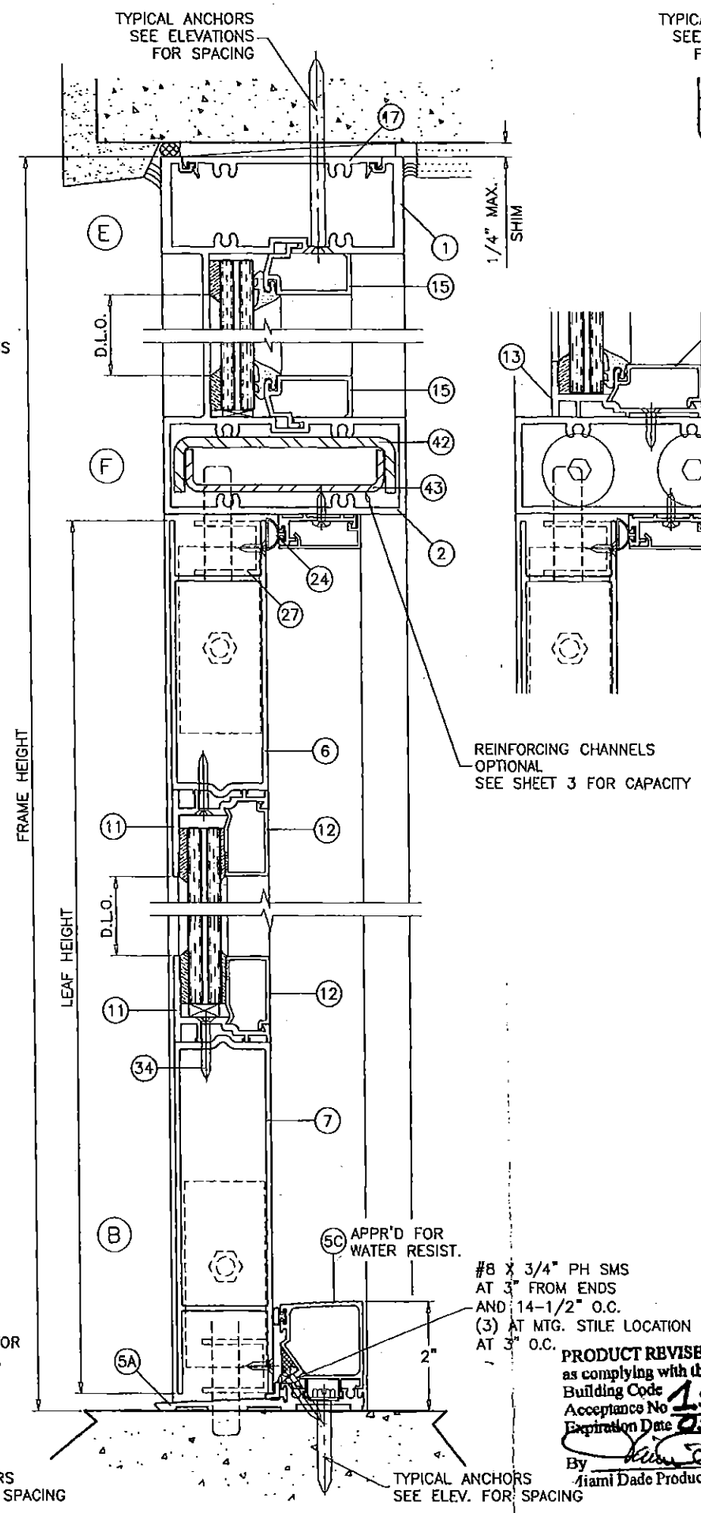

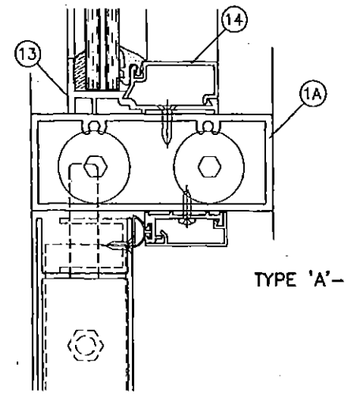

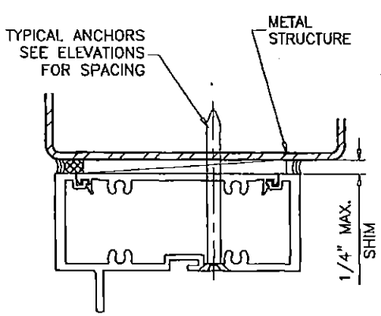

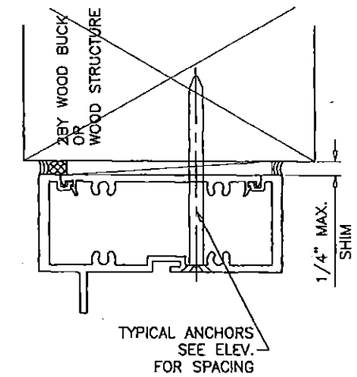

WOOD BUCKS AND METAL STRUCTURE NOT BY 'ALDORA ALUMINUM & GLASS PRODUCTS' MUST SUSTAIN LOADS IMPOSED BY GLAZING SYSTEM AND TRANSFER THEM TO THE BUILDING STRUCTURE.

TYPICAL ANCHORS: SEE ELEV. FOR SPACING

TYPE 'A'– 1/4" DIA. ULTRACON BY 'ELCO' (Fu=177 KSI, Fy=155 KSI)
INTO 2BY WOOD BUCKS OR WOOD STRUCTURES
1–1/2" MIN. PENETRATION INTO WOOD
THRU 1BY BUCKS INTO CONC. OR MASONRY
1–1/4" MIN. EMBED INTO CONC. OR MASONRY

TYPE 'B'– 1/4" DIA. ULTRACON BY 'ELCO' (Fu=177 KSI, Fy=155 KSI)
DIRECTLY INTO CONC. OR MASONRY
1–1/4" MIN. EMBED INTO MASONRY
1–3/4" MIN. EMBED INTO CONCRETE

TYPE 'C'– #14 SMS OR SELF DRILLING SCREWS (GRADE 2 CRS)
INTO MIAMI–DADE COUNTY APPROVED MULLIONS (MIN. THK.=1/8")
INTO METAL STRUCTURES
STEEL : 12 GA. MIN. (Fy = 36 KSI MIN.)
ALUMINUM : 1/8" THK. MIN. (6063–T5 MIN.)
(STEEL IN CONTACT WITH ALUMINUM TO BE PLATED OR PAINTED)

TYPICAL EDGE DISTANCE
INTO CONCRETE AND MASONRY = 2–1/2" MIN.
INTO WOOD STRUCTURE = 1" MIN.
INTO METAL STRUCTURE = 3/4" MIN.

TYPICAL CL TO CL DISTANCE
INTO CONCRETE AND MASONRY = 3" MIN.
INTO WOOD STRUCTURE = 1" MIN.
INTO METAL STRUCTURE = 1" MIN.

WOOD AT HEAD, SILL OR JAMBS SG = 0.55 MIN.
CONCRETE AT HEAD, SILL OR JAMBS f'c = 3000 PSI MIN.
C–90 HOLLOW FILLED BLOCK AT JAMBS f'm = 2000 PSI MIN.

PRODUCT REVISED
as complying with the Florida Building Code
Acceptance No 15-0106.05
Expiration Date 05/12/2016
By
Miami Dade Product Control

EDWARD ZAHID AHMAD
CIVIL
STATE OF FLORIDA
No. 65579
LICENSED PROFESSIONAL ENGINEER
05-12-2014

PRODUCT RENEWED
as complying with the Florida Building Code
NOA-No. 16-0216.01
Expiration Date 05/12/2017
By
Miami-Dade Product Control

AL-FAROOQ CORPORATION
ENGINEERS & PRODUCT DEVELOPMENT
1235 S.W. 87 AVE
MIAMI, FLORIDA 33174
TEL (305) 264-8100 FAX (305) 262-8878
COMP–ANL\W04–91 SM

SERIES K2LM ALUM OUT–SWING ENTRANCE DOOR

Aldora Aluminum & Glass Products Inc.
11500 MIRAMAR PARKWAY SUITE 300
MIRAMAR, FL. 33025
TEL (305) 888–6288 FAX. (305) 888–6289

revisions:

no	date	by	description
C	02.02.11		NO CHANGE THIS SHEET
D	10.21.11		NO CHANGE THIS SHEET
F	08.12.13		THRESHOLD DETAIL REV.
G	12.15.14		UPDATED TO 2014 FBC

date: 10-25-04
scale: 3/8" = 1"
dr. by: HAMID
chk. by:

drawing no. W04–91

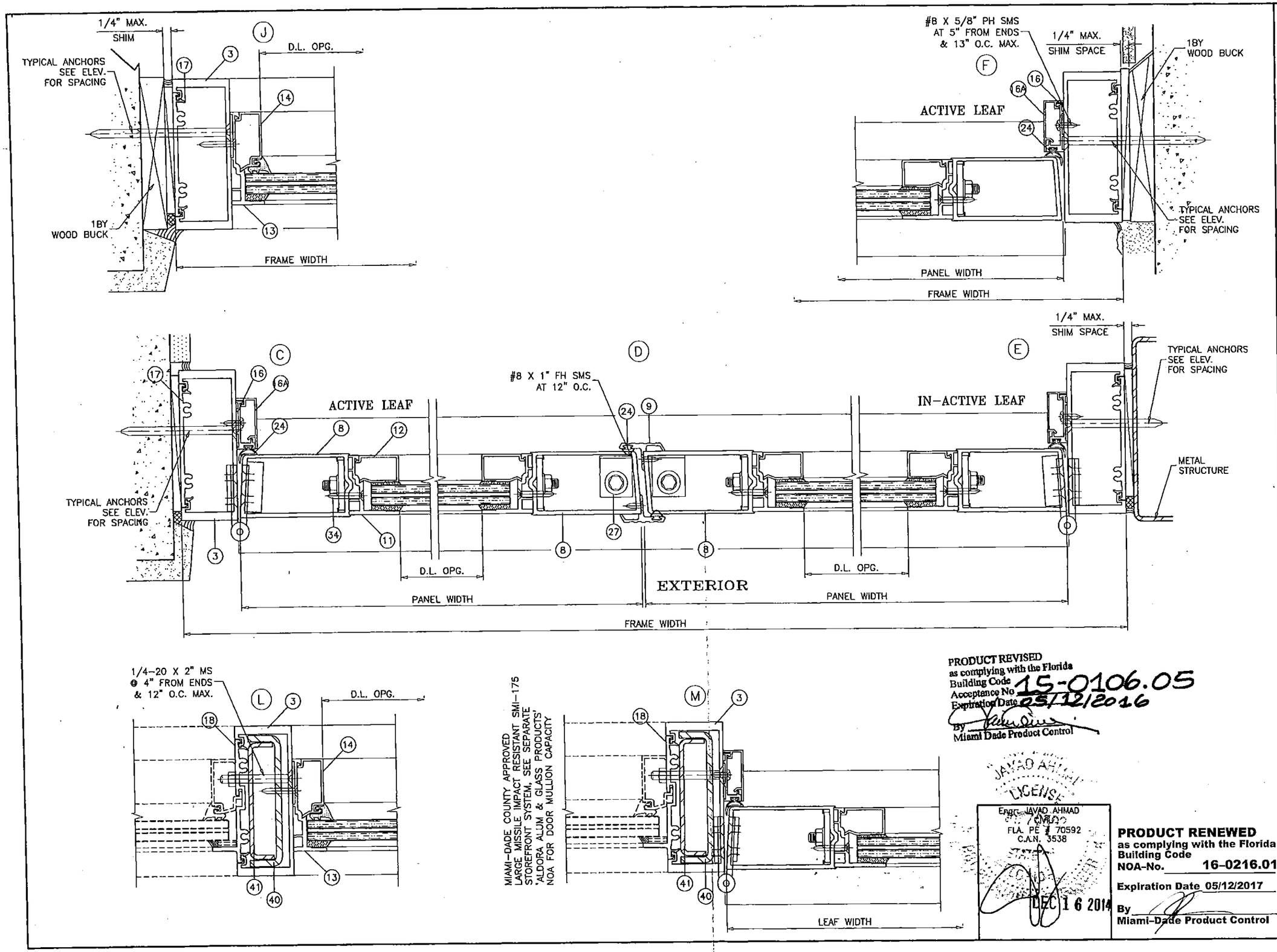

PRODUCT REVISED
as complying with the Florida Building Code
Acceptance No 15-0106.05
Expiration Date 05/12/2016
By
Miami Dade Product Control

JAVAD AHMAD
LICENSE
Engr. JAVAD AHMAD
FLA. PE # 70592
C.A.N. 3538
DEC 16 2014

PRODUCT RENEWED
as complying with the Florida Building Code
NOA-No. 16-0216.01
Expiration Date 05/12/2017
By
Miami-Dade Product Control

AL-FAROOQ CORPORATION
ENGINEERS & PRODUCT DEVELOPMENT
1235 S.W. 87 AVE
MIAMI, FLORIDA 33174
TEL. (305) 264-8400 FAX. (305) 262-6978
COMP-ANL\W04-91SM

SERIES K2LM ALUM OUT-SWING ENTRANCE DOOR

Aldora Aluminum & Glass Products Inc.
11500 MIRAMAR PARKWAY SUITE 300
MIRAMAR, FL. 33025
TEL. (305) 888-6288 FAX. (305) 888-6289

revisions:

no	date	by	description
C	02.02.11		NO CHANGE THIS SHEET
D	10.21.11		NO CHANGE THIS SHEET
F	08.12.13		MANUF. NAME REV.
G	12.15.14		UPDATED TO 2014 FBC

date: 10-25-04
scale: 3/8" = 1"
dr. by: HAMID
chk. by:

drawing no.
W04-91

sheet 8 of 11

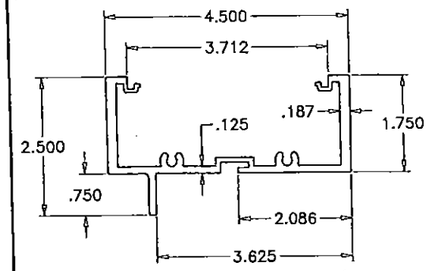

1 FRAME HEAD

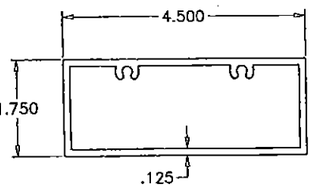

1A ALT. FRAME HEAD

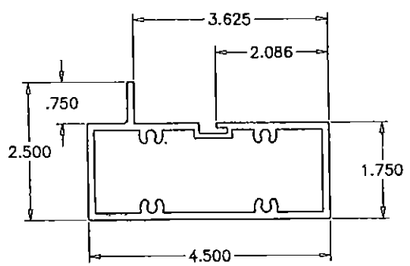

2 FRAME TRANSOM

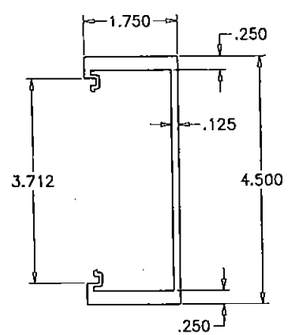

3 FRAME JAMB

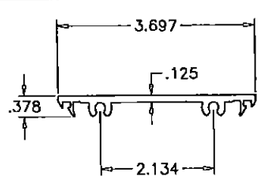

17 FLAT FILLER

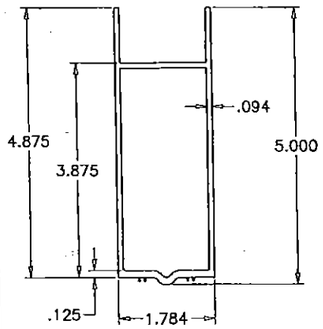

6 TOP RAIL

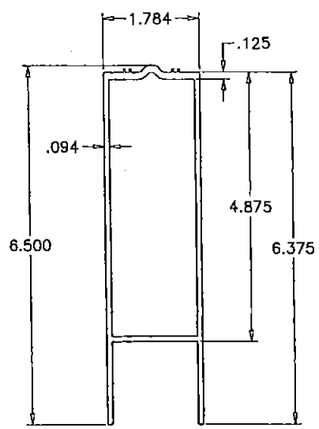

7 BOTTOM RAIL

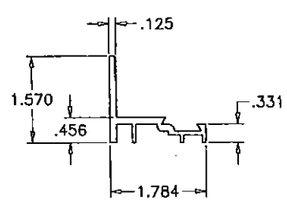

11 EXTERIOR GLASS STOP (DOOR)

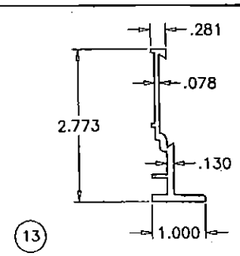

13 EXTERIOR GLASS STOP (TRANSOM)

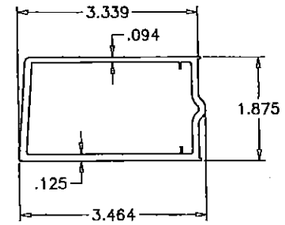

8 DOOR STILE

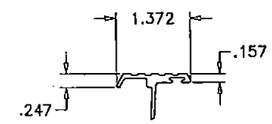

9 ASTRAGAL STILE

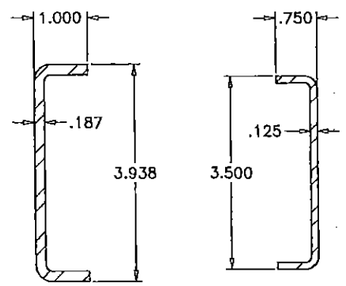

40 41 REINFORCING CHANNELS

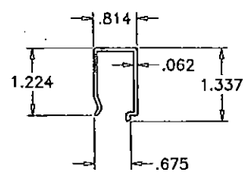

12 INTERIOR GLASS STOP (DOOR)

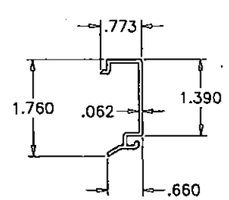

14 INTERIOR GLASS STOP (TRANSOM)

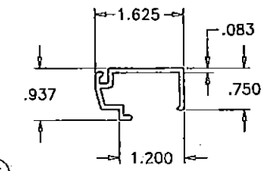

15 GLASS STOP (TRANSOM HEAD/SILL)

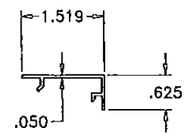

16A DOOR STOP COVER

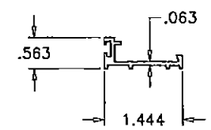

16 DOOR STOP

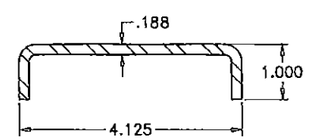

42

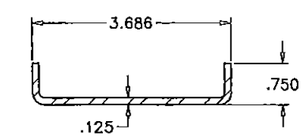

43 REINFORCING CHANNELS

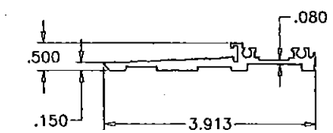

5A THRESHOLD BASE

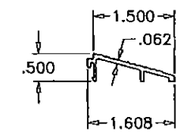

5B THRESHOLD RAMP ADAPTER

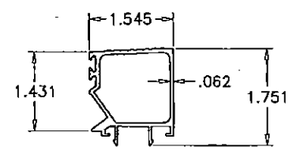

5C HI-RISE THRESHOLD COVER

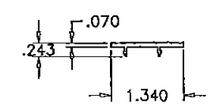

50 ADA THRESHOLD COVER

PRODUCT REVISED
as complying with the Florida Building Code
Acceptance No 15-0106.05
Expiration Date 05/12/2016
By
Miami Dade Product Control

Engr: JAVAD AHMAD
CIVIL
FLA. PE # 70592
C.A.N. 3538

DEC 16 2014

PRODUCT RENEWED
as complying with the Florida Building Code
NOA-No. 16-0216.01
Expiration Date 05/12/2017
By
Miami-Dade Product Control

AL-FAROOQ CORPORATION
ENGINEERS & PRODUCT DEVELOPMENT
1235 S.W. 87 AVE
MIAMI, FLORIDA 33174
TEL. (305) 264-8100 FAX. (305) 262-6978

COMP-ANL\W04-91SM

SERIES K2LM ALUM OUT-SWING ENTRANCE DOOR

Aldora Aluminum & Glass Products Inc.
11500 MIRAMAR PARKWAY SUITE 300
MIRAMAR, FL. 33025
TEL. (305) 888-6288 FAX. (305) 888-6289

revisions:

no	date	by	description
C	02.02.11		NO CHANGE THIS SHEET
D	10.21.11		NO CHANGE THIS SHEET
F	08.12.13		THRESHOLD REV.
G	12.15.14		UPDATED TO 2014 FBC

date: 10-25-04
scale: 3/8" = 1"
dr. by: HAMID
chk. by:

drawing no. W04-91

LOCK OPTIONS:

OPTION 1:

SINGLE LEAF DOORS:

ALL SINGLE LEAF DOORS TO BE FITTED WITH 3 POINT LOCK

DOUBLE LEAF DOORS:

ACTIVE LEAF:

THREE POINT LOCK SYSTEM WITH 5 PLY HOOK LOCK BOLT REGENT 2222, KEY OPERATED ON EXTERIOR AND THUMB-TURN ON INTERIOR, LOCATED AT 34" FROM BOTTOM OF PANEL

INACTIVE LEAF:

TWO POINT LOCK SYSTEM SULLIVAN CH 103 WITH THUMB TURN ON THE INTERIOR, LOCATED AT 34" FROM BOTTOM OF PANEL

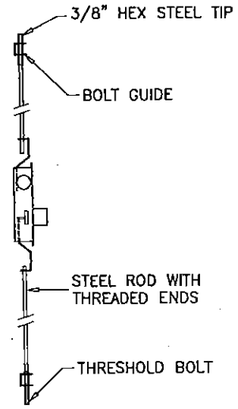

OPTION 2:

SINGLE LEAF DOORS:

ALL SINGLE LEAF DOORS TO BE FITTED WITH 3 POINT LOCK

DOUBLE LEAF DOORS:

ACTIVE LEAF:

THREE POINT LOCK SYSTEM WITH 4 PLY HOOK LOCK REGENT NO. 206-3P, KEY OPERATED ON EXTERIOR AND THUMB-TURN ON INTERIOR, LOCATED AT 36" FROM BOTTOM OF PANEL

INACTIVE LEAF:

TWO POINT LOCK SYSTEM SULLIVAN CH 103 WITH THUMB TURN ON THE INTERIOR, LOCATED AT 36" FROM BOTTOM OF PANEL

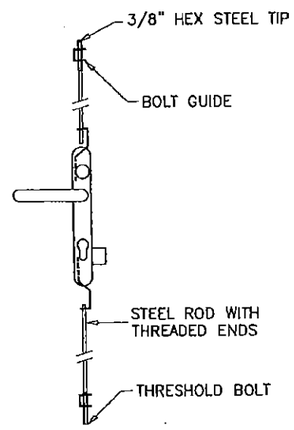

HINGES:

4-1/2 X 4" TWO PIECE STAINLESS STEEL BUTT HINGES AT 8" FROM TOP AND BOTTOM AND 26" O.C. MAX.

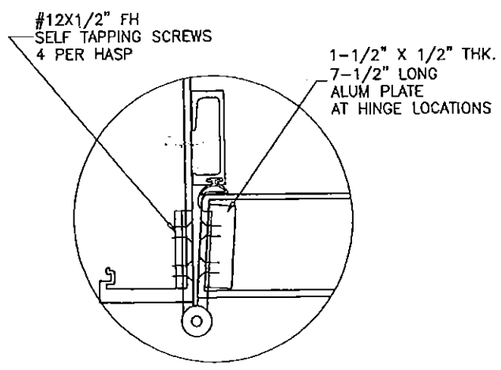

ITEM #	PART #	SMIS EXT. #	REQD.	DESCRIPTION	MATERIAL	MANF./SUPPLIER/REMARKS
1	5806	SMI-001	1	FRAME HEAD	6063-T6	-
1A	SMM-006	SMI-006	1	ALT. FRAME HEAD	6063-T6	-
2	5710	SMI-018	AS REQD.	FRAME TRANSOM	6063-T6	-
3	SMM-6007	SMI-005	2	FRAME JAMB	6063-T6	-
5A	-	SMI-036	1	THRESHOLD BASE	6063-T6	-
5B	-	SMI-037	1	THRESHOLD RAMP ADAPTER	6063-T5	-
5C	-	SMI-066	1	HI-RISE THRESHOLD COVER	6063-T5	-
5D	-	SMI-038	1	ADA THRESHOLD COVER	6063-T5	-
6	SMM-5984	SMI-012	1/ LEAF	TOP RAIL	6063-T6	-
7	SMM-5987	SMI-013	1/ LEAF	BOTTOM RAIL	6063-T6	-
8	SMM-5986	SMI-011	2/ LEAF	DOOR STILE	6063-T6	-
9	SMI-030	SMI-030	1/ LEAF	ASTRAGAL	6063-T5	-
11	SMM-5981	SMI-007	4/ LEAF	EXTERIOR GLASS STOP (DOOR)	6063-T5	-
12	SMM-5982	SMI-008	4/ LEAF	INTERIOR GLASS STOP (DOOR)	6063-T5	-
13	SMM-003	SMI-016	-	EXTERIOR GLASS STOP (TRANSOM JAMB)	-	-
14	SMM-004	SMI-017	-	INTERIOR GLASS STOP (TRANSOM JAMB)	-	-
15	SMM-5712	SMI-002	2/ LITE	GLASS STOP (TRANSOM HEAD/SILL)	-	-
16	SMM-002	SMI-014	3/ DOOR	DOOR STOP	6063-T5	-
16A	SMM-001	SMI-015	3/ DOOR	DOOR STOP COVER	6063-T5	-
17	SMM-5807A	SMI-004	OPTIONAL	FLAT FILLER	6063-T6	-
18	SMI-003	-	AS REQD.	INTERMEDIATE SNAP-IN	6063-T5	-
19	H-63	SMI-G01	AS REQD.	WEDGE-IN GASKET	NEOPRENE	DUROMETER 68 SHORE A
24	-	SMI-G03	AS REQD.	BULB W'STRIPPING	VINYL	DUROMETER 83 SHORE A
26	-	-	2/ LEAF	3/8" THREADED ROD WITH NUT	STEEL	-
27	-	-	2/ LEAF	FLUSH BOLT GUIDE	ST. STEEL	-
28	-	-	AS REQD.	PUSH BAR	-	-
29	-	-	AS REQD.	PULL HANDLE	-	-
30	-	-	2	THRESHOLD CLIP	ALUMINUM	2" X 2" X 1/8" X 7/8" LONG
31	-	-	4/ LEAF	SUPPORT PLATE (1-1/2" X 3-3/8" X 3/16")	ALUMINUM	-
33	#12 X 1-1/2"	-	AS REQD.	FRAME ASSEMBLY SCREWS	-	HEX H TEKS
35	#12 X 3/4"	-	AS REQD.	THRESHOLD CLIP SCREWS	-	FH SELF DRILLING
37	#10 X 5/16"	-	2/ GUIDE	GUIDE INSTALLATION SCREWS	-	FH MS
40	-	-	-	REINFORCING CHANNEL (DOOR MULL)	STEEL	1" X 3-15/16" X 1" X 3/16" THK.
41	-	-	-	REINFORCING CHANNEL (DOOR MULL)	STEEL	3/4" X 3-1/2" X 3/4" X 1/8" THK.
42	-	-	OPTIONAL	REINFORCING CHANNEL (TRANSOM)	STEEL	1" X 4-1/8" X 1" X 3/16" THK.
43	-	-	OPTIONAL	REINFORCING CHANNEL (TRANSOM)	STEEL	3/4" X 3-11/16" X 3/4" X 1/8" THK.
44	-	-	2/ LITE	SETTING BLOCKS AT 1/4 POINTS	EPDM	DUROMETER 80±5 SHORE A

SEALANTS:

ALL FRAME AND LEAF CORNERS AND INSTALLATION SCREWS SEALED WITH SILICONE.

PRODUCT REVISED
as complying with the Florida Building Code
Acceptance No 15-0106.05
Expiration Date 05/12/2016
By
Miami Dade Product Control

Engr: JAVAD AHMAD
CIVIL
FLA. PE # 70592
C.A.N. 3538
DEC 16 2014

PRODUCT RENEWED
as complying with the Florida Building Code
NOA-No. 16-0216.01
Expiration Date 05/12/2017
By
Miami-Dade Product Control

AL-FAROOQ CORPORATION
ENGINEERS & PRODUCT DEVELOPMENT
1235 S.W. 87 AVE
MIAMI, FLORIDA 33174
TEL. (305) 264-8100 FAX. (305) 262-6978
COMP-ANL\W04-91SM

SERIES K2LM ALUM OUT-SWING ENTRANCE DOOR

Aldora Aluminum & Glass Products Inc.
11500 MIRAMAR PARKWAY SUITE 300
MIRAMAR, FL. 33025
TEL. (305) 888-6288 FAX. (305) 888-6289

revisions:

no	date	by	description
C	02.02.11		DUROMETER
D	10.21.11		NO CHANGE THIS SHEET
F	08.12.13		MANUF. NAME REV.
G	12.15.14		UPDATED TO 2014 FBC

date: 10-25-04
scale: 3/8" = 1"
dr. by: HAMID
chk. by:

drawing no. W04-91

sheet 10 of 11

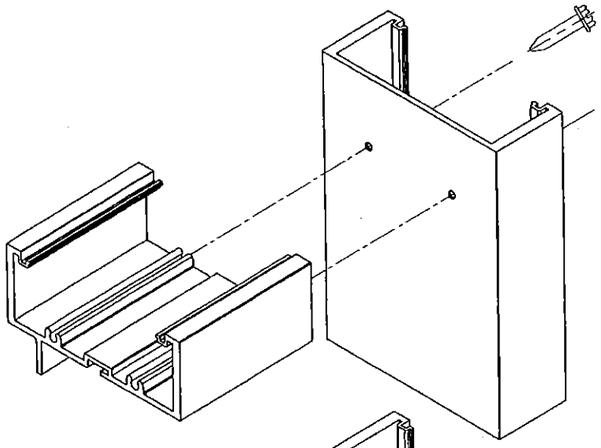

FRAME TOP CORNER

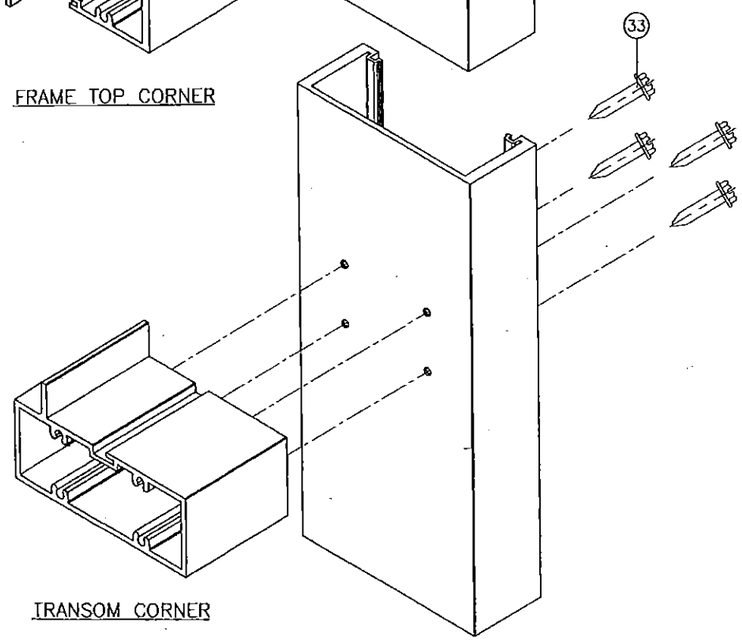

TRANSOM CORNER

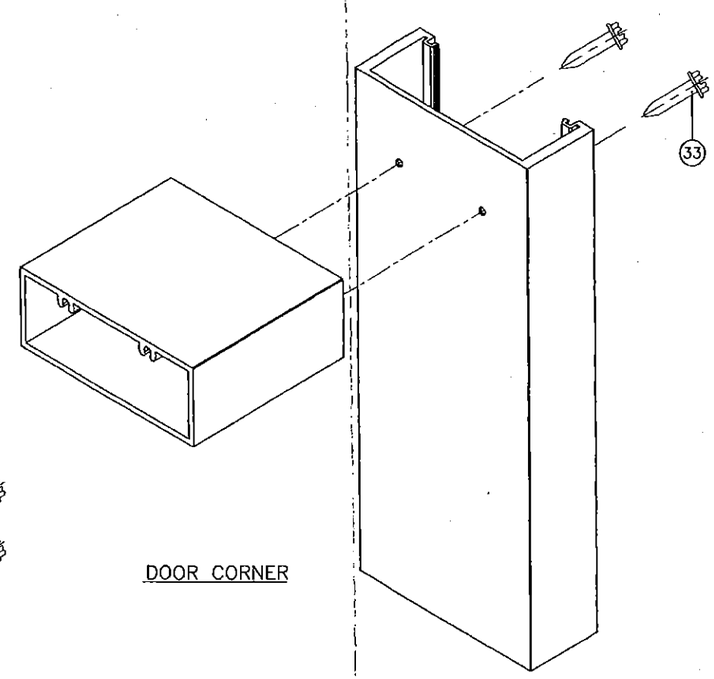

DOOR CORNER

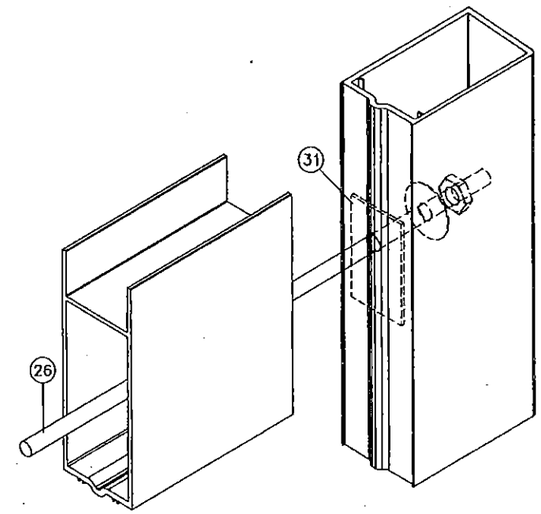

DOOR LEAF CORNER

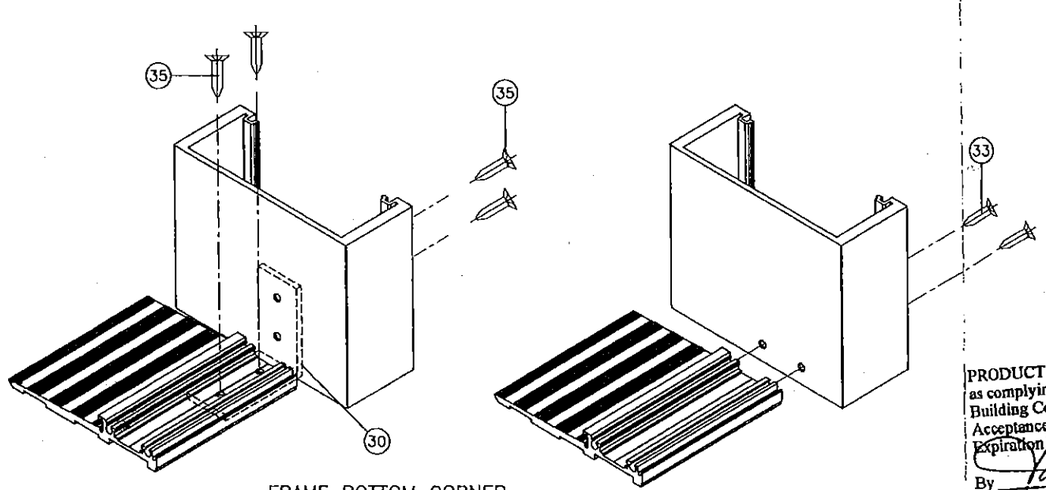

FRAME BOTTOM CORNER

PRODUCT REVISED
as complying with the Florida Building Code
Acceptance No 15-0106.05
Expiration Date 05/12/2016
By
Miami Dade Product Control

Engr JAVAD AHMAD
CIVIL
FLA PE-1 70592
CA AO 3528
OCT 16 2014

PRODUCT RENEWED
as complying with the Florida Building Code
NOA-No. 16-0216.01
Expiration Date 05/12/2017
By
Miami-Dade Product Control

AL-FAROOQ CORPORATION
ENGINEERS & PRODUCT DEVELOPMENT
1235 S.W. 87 AVE
MIAMI, FLORIDA 33174
TEL. (305) 264-8100 FAX. (305) 262-6978
COMP-ANL\W04-91SM

SERIES K2LM ALUM OUT-SWING ENTRANCE DOOR

Aldora Aluminum & Glass Products Inc.
11500 MIRAMAR PARKWAY SUITE 300
MIRAMAR, FL. 33025
TEL. (305) 888-6288 FAX. (305) 888-6289

revisions:

no	date	by	description
C	02.02.11		NO CHANGE THIS SHEET
D	10.21.11		NO CHANGE THIS SHEET
F	08.12.13		MANUF. NAME REV.
G	12.15.14		UPDATED TO 2014 FBC

date: 10-25-04
scale: 3/8" = 1"
dr. by: HAMID
chk. by:

drawing no.
W04-91
sheet 11 of 11