MIAMI-DADE COUNTY
PRODUCT CONTROL SECTION
11805 SW 26 Street, Room 208
Miami, Florida 33175-2474
T (786) 315-2590 F (786) 315-2599
www.miamidade.gov/economy

DEPARTMENT OF REGULATORY AND ECONOMIC RESOURCES (RER)
BOARD AND CODE ADMINISTRATION DIVISION

NOTICE OF ACCEPTANCE (NOA)

Construction Specialties, Inc.
49 Meeker Avenue
Cranford, NJ 07016

SCOPE:

This NOA is being issued under the applicable rules and regulations governing the use of construction materials. The documentation submitted has been reviewed and accepted by Miami-Dade County RER-Product Control Section to be used in Miami Dade County and other areas where allowed by the Authority Having Jurisdiction (AHJ).

This NOA shall not be valid after the expiration date stated below. The Miami-Dade County Product Control Section (In Miami Dade County) and/or the AHJ (in areas other than Miami Dade County) reserve the right to have this product or material tested for quality assurance purposes. If this product or material fails to perform in the accepted manner, the manufacturer will incur the expense of such testing and the AHJ may immediately revoke, modify, or suspend the use of such product or material within their jurisdiction. RER reserves the right to revoke this acceptance, if it is determined by Miami-Dade County Product Control Section that this product or material fails to meet the requirements of the applicable building code.

This product is approved as described herein, and has been designed to comply with the Florida Building Code, including the High Velocity Hurricane Zone.

DESCRIPTION: Model DC-9614 Aluminum Louver

APPROVAL DOCUMENT: Drawing No. **RD-1457**, titled "DC-9614 Submittal Drawings", sheets 1 through 13 of 13, dated 11/20/2015, prepared by Construction Specialties, Inc., signed and sealed by L. David Rice, P.E., bearing the Miami-Dade County Product Control approval stamp with the Notice of Acceptance number and approval date by the Miami-Dade County Product Control Section.

MISSILE IMPACT RATING: Large and Small Missile Impact Resistant

LABELING: Each unit shall bear a permanent label with the manufacturer's name or logo, Del Rio, TX, model/series, and following statement: "Miami-Dade County Product Control Approved", unless otherwise noted herein.

RENEWAL of this NOA shall be considered after a renewal application has been filed and there has been no change in the applicable building code negatively affecting the performance of this product.

TERMINATION of this NOA will occur after the expiration date or if there has been a revision or change in the materials, use, and/or manufacture of the product or process. Misuse of this NOA as an endorsement of any product, for sales, advertising or any other purposes shall automatically terminate this NOA. Failure to comply with any section of this NOA shall be cause for termination and removal of NOA.

ADVERTISEMENT: The NOA number preceded by the words Miami-Dade County, Florida, and followed by the expiration date may be displayed in advertising literature. If any portion of the NOA is displayed, then it shall be done in its entirety.

INSPECTION: A copy of this entire NOA shall be provided to the user by the manufacturer or its distributors and shall be available for inspection at the job site at the request of the Building Official.

This NOA consists of this page 1 and evidence page E-1, as well as approval document mentioned above.

The submitted documentation was reviewed by **Carlos M. Utrera, P.E.**

MIAMI-DADE COUNTY APPROVED

07/21/2016

NOTICE OF ACCEPTANCE: EVIDENCE SUBMITTED

A. DRAWINGS

1. Drawing No. **RD-1457**, titled "DC-9614 Submittal Drawings", sheets 1 through 13 of 13, dated 11/20/2015, prepared by Construction Specialties, Inc., signed and sealed by L. David Rice, P.E.

B. TESTS

1. Test reports on 1) Uniform Static Air Pressure Test, Loading per FBC TAS 202-94
   2) Large Missile Impact Test per FBC, TAS 201-94
   3) Cyclic Wind Pressure Loading per FBC, TAS 203-94
   along with marked-up drawings and installation diagram of DC-9614 Aluminum Louvers, prepared by Intertek/Architectural Testing, Inc., Report No. **F1331.01-109-18**, dated 12/21/2015, signed and sealed by Joseph A. Reed, P.E.
2. Test Report on High Velocity Wind Driven Rain Resistance per AMCA 550-09 of a Model DC-9614 Aluminum Louver, prepared by Intertek/Architectural Testing, Inc, Test Report No. **E4141.02-602-44**, dated 01/14/2015, with revision 2 dated 06/26/2015, signed and sealed by Joseph A. Reed, P.E.

C. CALCULATIONS

1. Anchor and structural calculations prepared by Rice Engineering, dated 02/11/2016, signed and sealed by L. David Rice, P.E.

D. QUALITY ASSURANCE

1. Miami-Dade Department of Regulatory and Economic Resources (RER)

E. MATERIAL CERTIFICATIONS

1. Test report on Impact Resistance per AMCA 540-13 of Model DC-9614 Aluminum Louvers, prepared by Intertek/Architectural Testing, Inc., Test Report No. **E7316.01-109-44** dated 08/11/2015, with revision 1 dated 08/21/2015, signed and sealed by Joseph A. Reed, P.E.

F. STATEMENTS

1. Statement letter of code conformance to the 5th edition (2014) FBC issued by Rice Engineering, dated 02/11/2015, signed and sealed by L. David Rice, P.E.
2. Statement letter of no financial interest issued by Rice Engineering, dated 02/11/2015, signed and sealed by L. David Rice, P.E.

07/21/2016

Carlos M. Utrera, P.E.
Product Control Examiner
NOA No. 16-0222.04
Expiration Date: July 28, 2021
Approval Date: July 28, 2016

RICE
ENGINEERING
105 School Creek Trail
Luxemburg, WI 54217
Phone: (920) 617-1042
Fax: (920) 617-1100
www.rice-inc.com

Florida Firm No: F-01000005061
Certificate of Authorization: #9090
L. David Rice
Registration No: 50923

L. DAVID RICE
LICENSE
No. 50923
STATE OF FLORIDA
PROFESSIONAL ENGINEER
MAY 2 3 2016

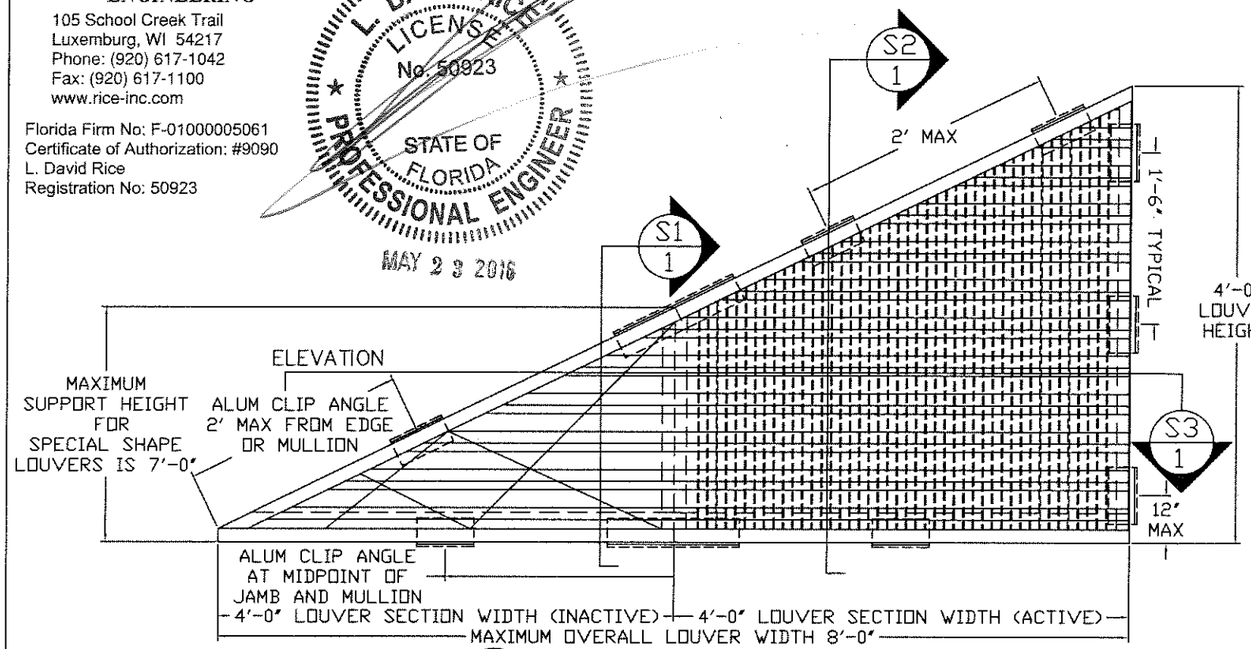

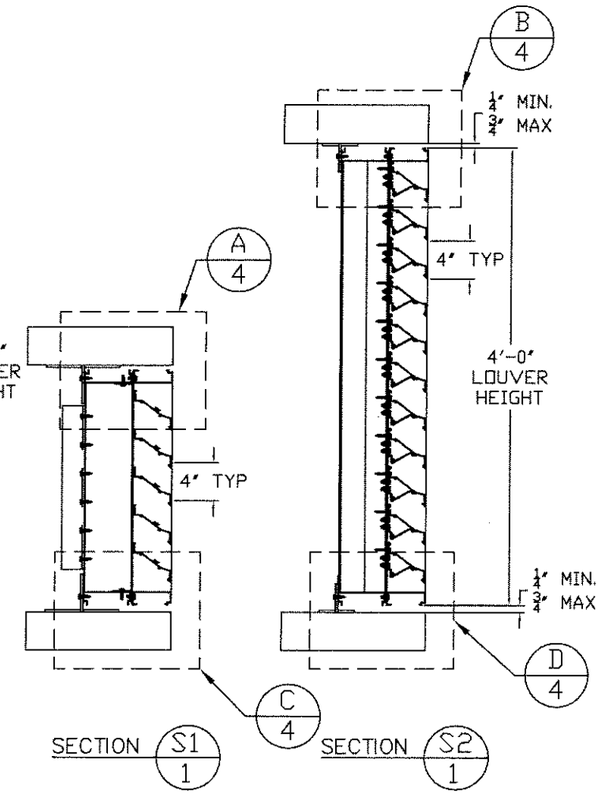

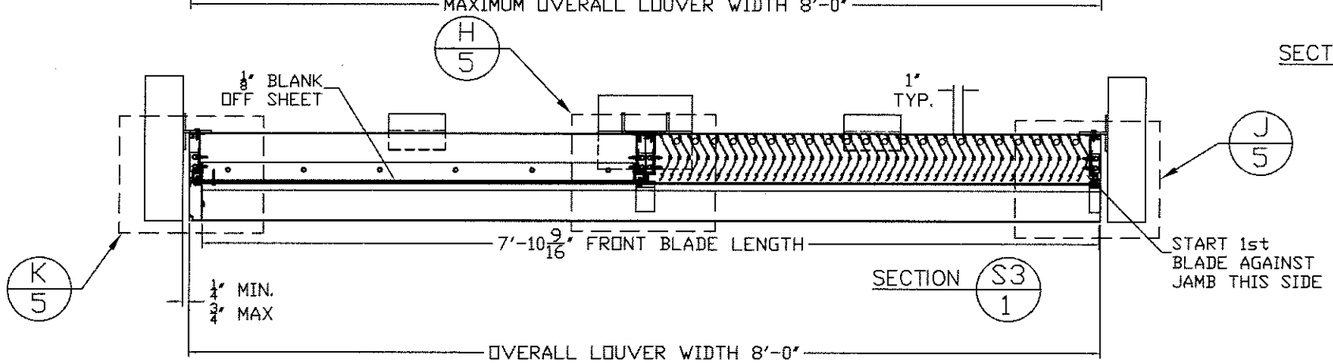

SPECIMEN 1 +/- 160 PSF

EXAMPLES OF SPECIAL SHAPES AVAILABLE
(NO ROUND OR CIRCULAR FRAMES PERMITTED.

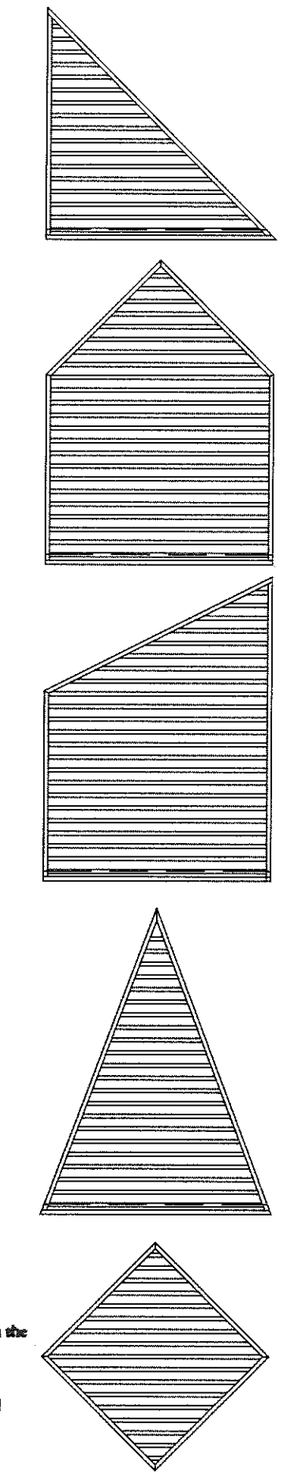

1) It shall be the responsibility of the Structural Engineer of Record to verify the capacity of the structure to support the loads imposed by the louvers.
2) These louvers have been designed according to the Florida Building Code and the Aluminum Design Manual. They are tested in accordance with Dade County protocols TAS 201, TAS 202 and TAS 203.
3) All fasteners shall be stainless steel or plated steel.
4) All block grout substrate shall be designed by others (1500 PSI, ASTM C90, Type II with min. 2000 PSI Grout).
5) Section widths and heights are limited as shown in elevations and details.
6) The louver may be installed in a location where the room behind the louver is NOT DESIGNED to drain water penetrating into the room and the room will house non waterproof or non water resistant equipment, components or supplies.
7) Each fastener used must be detailed on the drawing and verified on the NOA.
8) Separation of unpainted aluminum and dissimilar materials per Aluminum Design Manual to be maintained by the installer.
10) This louver system has been tested, analyzed and approved for design pressures up to and including +/-160 PSF.
11) Stack sections horizontally to an unlimited opening width.
12) Louver Construction - Head, sill and jambs are constructed of extruded aluminum. The corners are coped and butted, secured with (2) #8 x 1½" screws at each corner, through the sill into the jambs and through the head into the jambs. The jambs are also secured to the head and sill with a 1"x1½"x⅛"x2"LG alum. angle with (4)1/4-14x1"LG SS HH TEK Screws. The rear blades are secured to the head and sill using (2) #8 x 1½" hex head screws. Front blades are secured using a blade brace, and then a #12x2"LG SS HH TEK Screw (field installed) through the top of the blade at each blade end. For special shape louvers, louvers are supplied with front blades shop attached and welded.
13) These louvers have been designed and tested in accordance with AMCA 550 Test Method for High Velocity Wind Driven Rain Resistant Louvers. Minimum section size to be 16" x 16".
14) A horizontal rod and tube spacer is used on the rear blades if the section height is greater than 96".
15) For louver areas requiring intake or exhaust airflow (active), both front and rear blades must be used. For all other areas where no airflow is required (inactive) a fully blanked off louver section can be supplied using the 1/8" aluminum blank off sheet with formed sides.

Approved as complying with the Florida Building Code
Date 01/28/2016
NOA# 16-0222.04
Miami Dade Product Control
By

REVISION:
DATE: 11-20-15
SHEET: 1 OF 13
DRW NO: RD-1457

PROJECT: DC-9614 SUBMITTAL DRAWINGS
TITLE: SPECIMEN 1 AND AVAILABLE SPECIAL SHAPES
SCALE: 3/4" = 1'-0"
DRW BY: R. GEIST

Construction Specialties™
49 MEEKER AVENUE, CRANFORD, NEW JERSEY
PHONE: 1-800-631-7379 / FAX: 908-272-5844

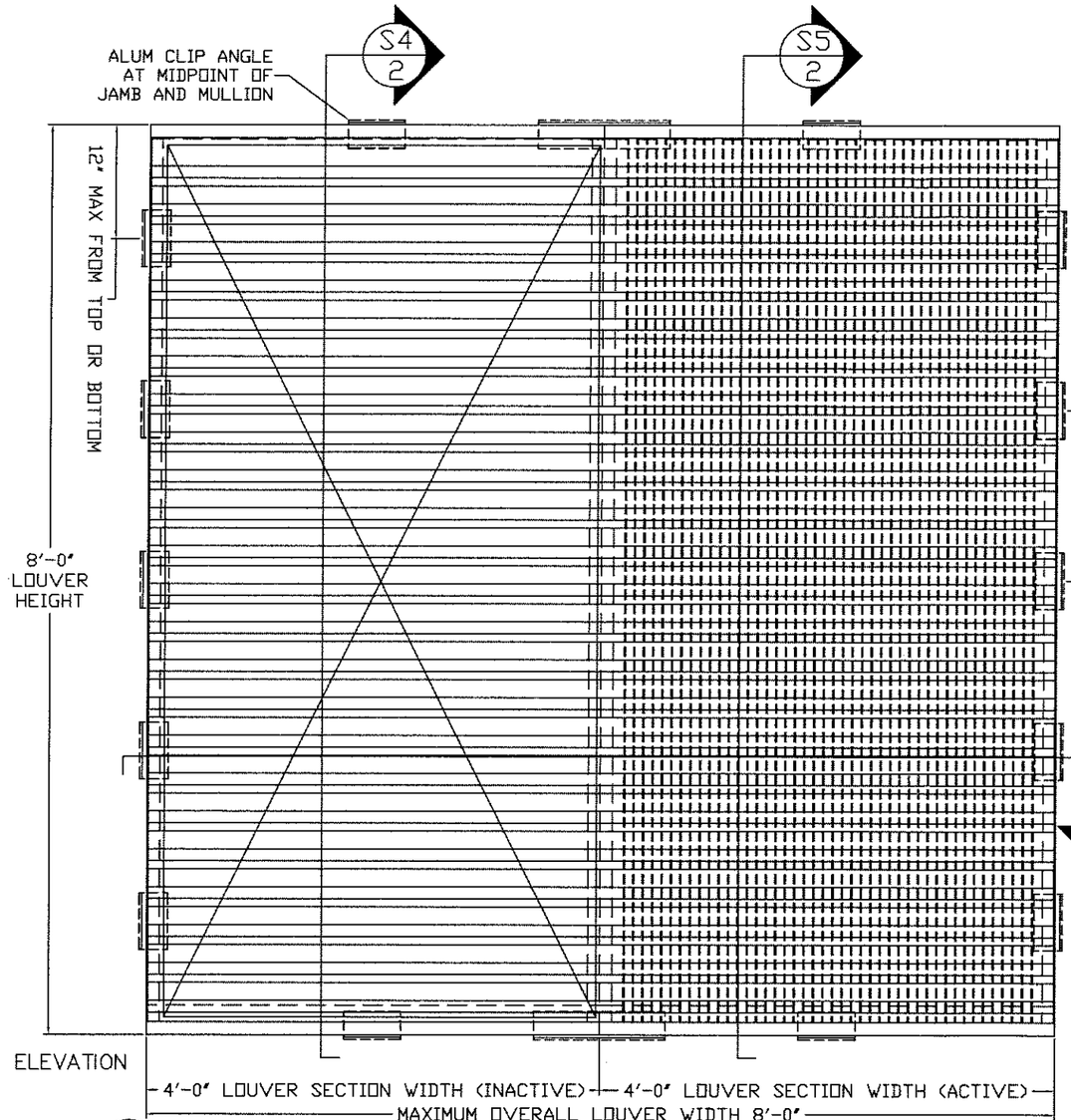

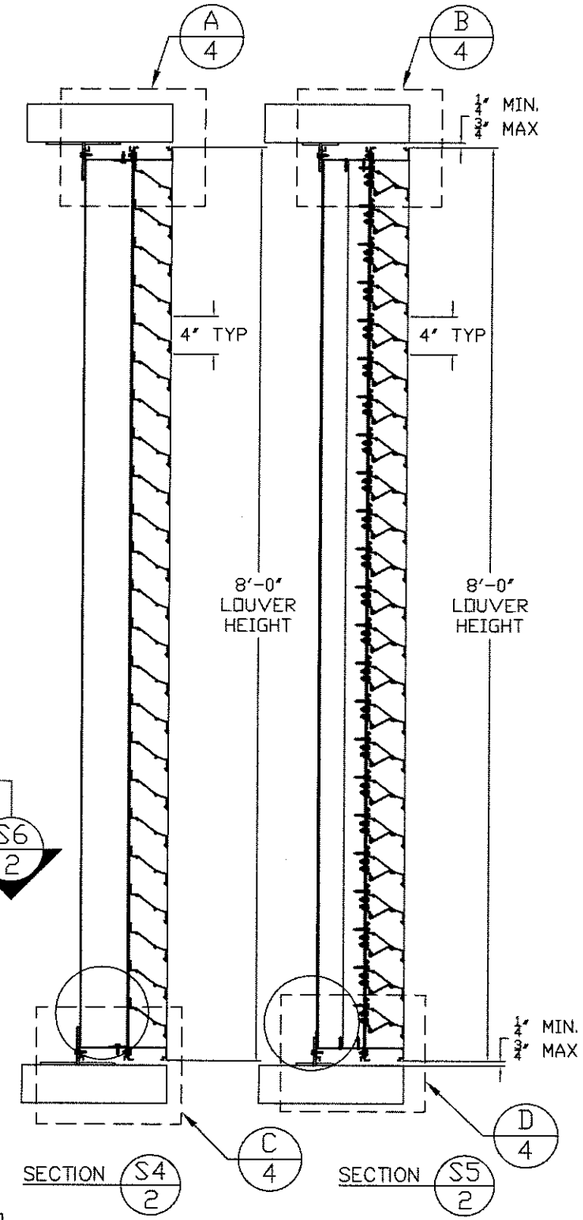

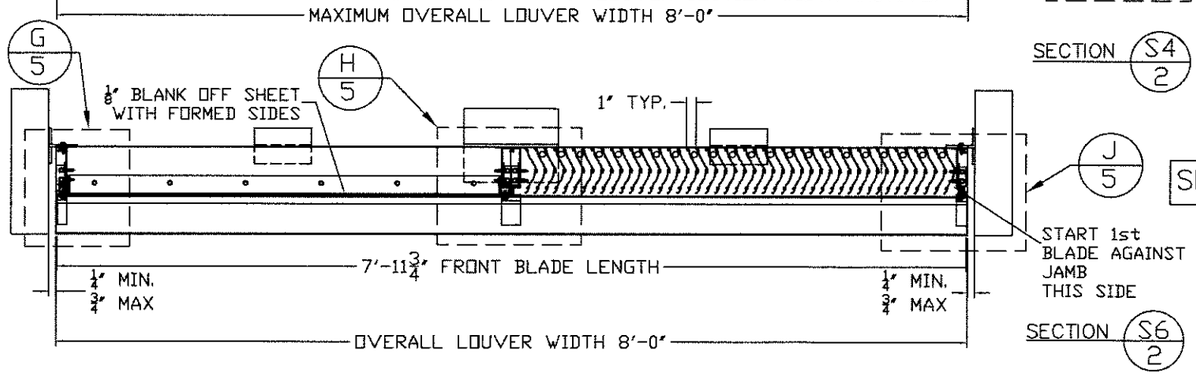

SPECIMEN 2 +/- 120 PSF

Approved as complying with the
Florida Building Code
Date 07/28/2016
NOA# 16-0222.04
Miami Dade Product Control
By

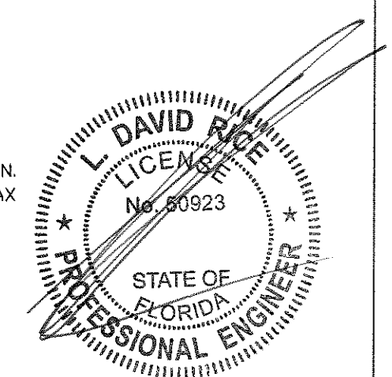

MAY 23 2016

RICE
ENGINEERING
105 School Creek Trail
Luxemburg, WI 54217
Phone: (920) 617-1042
Fax: (920) 617-1100
www.rice-inc.com

Florida Firm No: F-01000005061
Certificate of Authorization: #9090
L. David Rice
Registration No: 50923

REVISION:
DATE: 11-20-15
SHEET: 2 OF 13
DRW NO: RD-1457

PROJECT: DC-9614 SUBMITTAL DRAWINGS
TITLE: SPECIMEN 2
SCALE: 3/4" = 1'-0"
DRW BY: R. GEIST

Construction Specialties™
49 MEEKER AVENUE, CRANFORD, NEW JERSEY
PHONE: 1-800-631-7379 / FAX: 908-272-5844

RICE
ENGINEERING
105 School Creek Trail
Luxemburg, WI 54217
Phone: (920) 617-1042
Fax: (920) 617-1100
www.rice-inc.com

Florida Firm No: F-01000005061
Certificate of Authorization: #9090
L. David Rice
Registration No: 50923

L. DAVID RICE
LICENSE
No. 50923
STATE OF FLORIDA
PROFESSIONAL ENGINEER
MAY 23 2016

Approved as complying with the Florida Building Code
Date 07/29/2016
NOA# 16-0722.04
Miami Dade Product Control
By

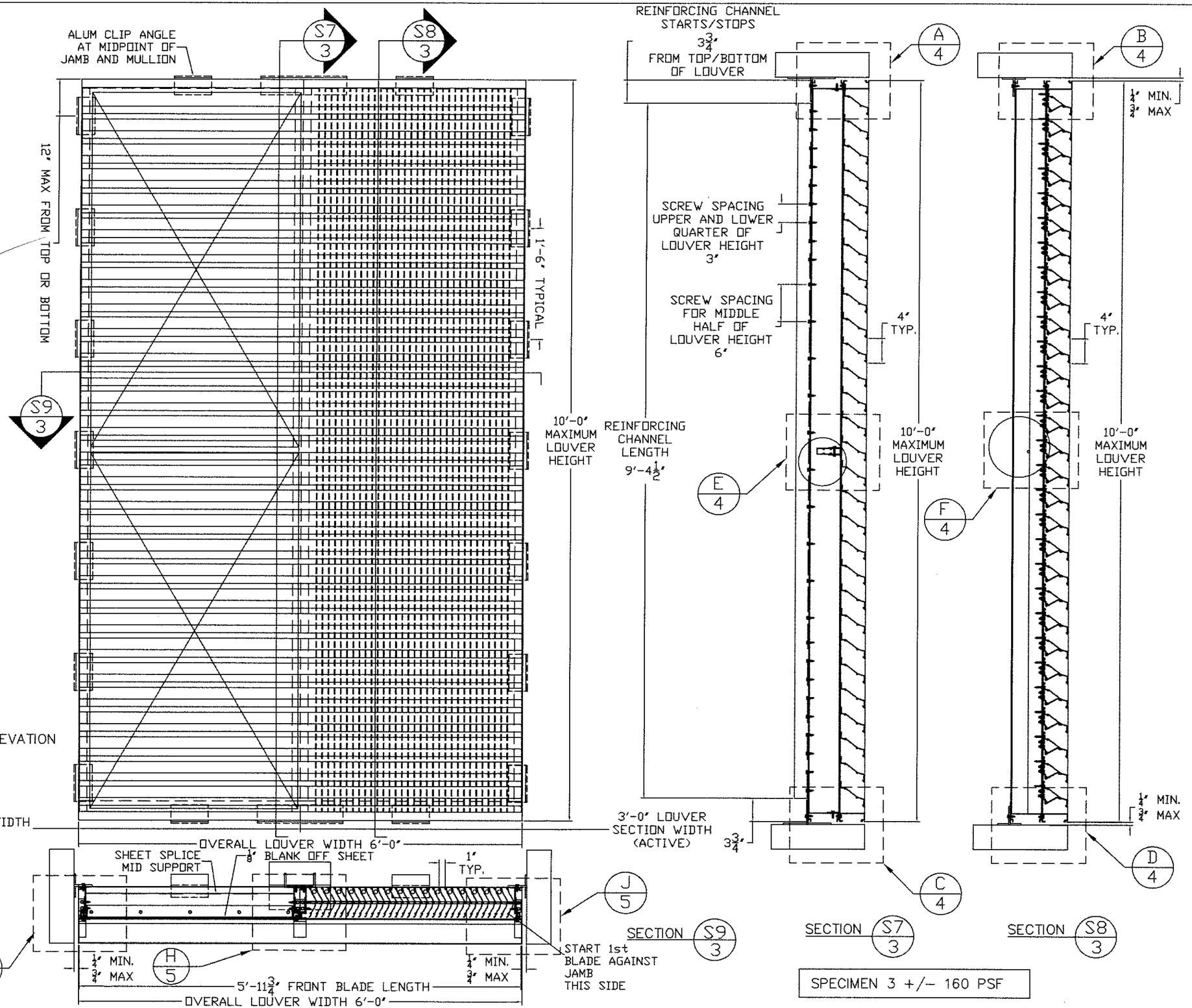

SPECIMEN 3 +/- 160 PSF

REVISION:	
DATE: 11-20-15	
SHEET: 3 OF 13	
DRW NO.: RD-1457	
PROJECT: DC-9614 SUBMITTAL DRAWINGS	
TITLE: SPECIMEN 3	
SCALE: 3/4" = 1'-0"	
DRW BY: R. GEIST	

Construction Specialties™
49 MEEKER AVENUE, CRANFORD, NEW JERSEY
PHONE: 1-800-631-7379 / FAX: 908-272-5844

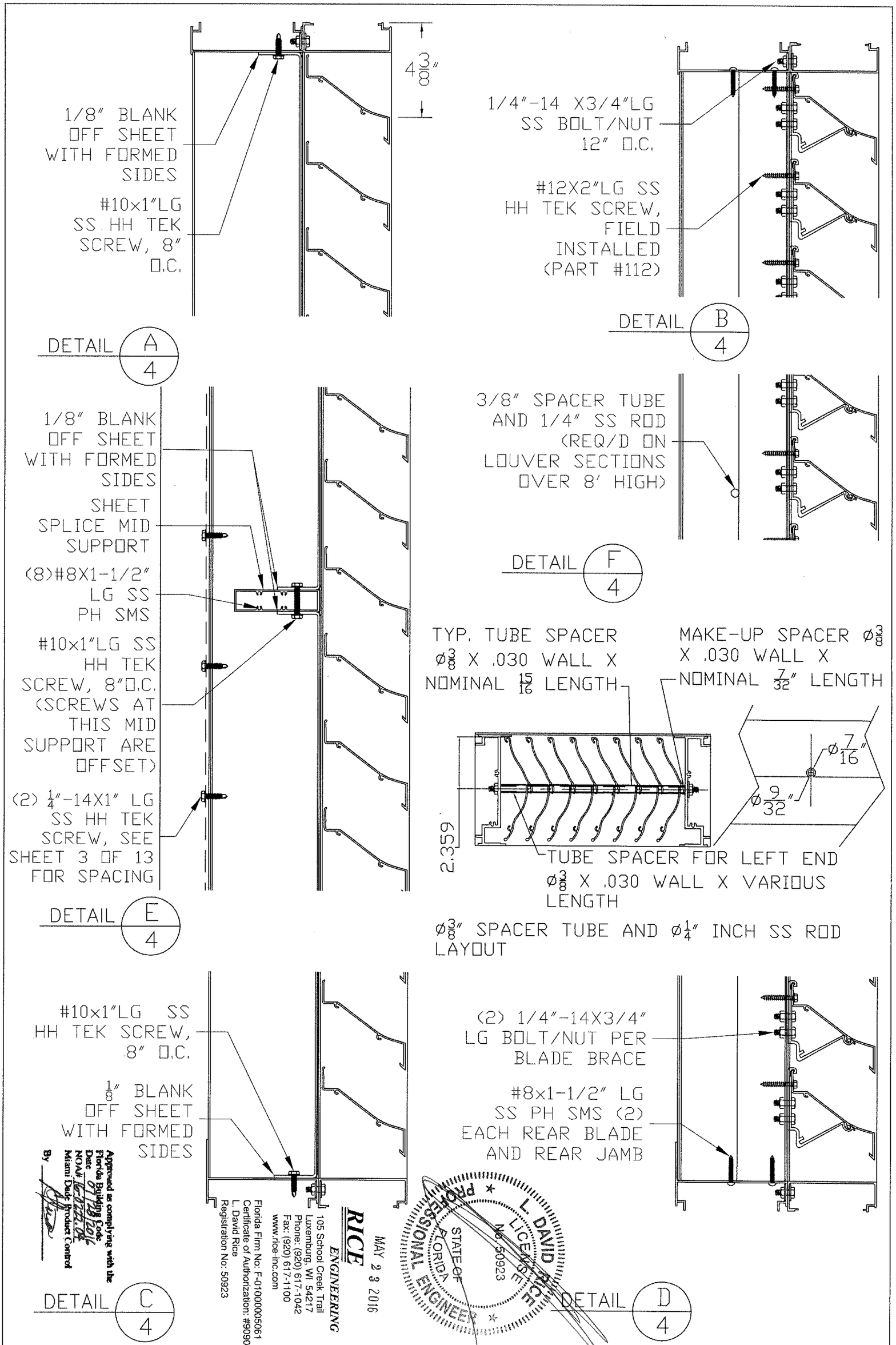

Approved as complying with the Florida Building Code
Date 07/28/2016
NOA# 16-0222.04
Miami Dade Product Control
By

RICE ENGINEERING
105 School Creek Trail
Luxemburg, WI 54217
Phone: (920) 617-1042
Fax: (920) 617-1100
www.rice-inc.com
Florida Firm No: F-01000005061
Certificate of Authorization: #9090
L. David Rice
Registration No: 50923

MAY 23 2016

L. DAVID RICE
LICENSE No. 50923
STATE OF FLORIDA
PROFESSIONAL ENGINEER

Construction Specialties™
49 MEEKER AVENUE, CRANFORD, NEW JERSEY
PHONE: 1-800-631-7379 / FAX: 908-272-5844

PROJECT: DC-9614 SUBMITTAL DRAWINGS	REVISION:
TITLE: LOUVER ASSEMBLY DETAILS PART A	DATE: 11-20-15
SCALE: 3" = 1'-0"	SHEET: 4 OF 13
DRW BY: R. GEIST	DRW NO : RD-1457

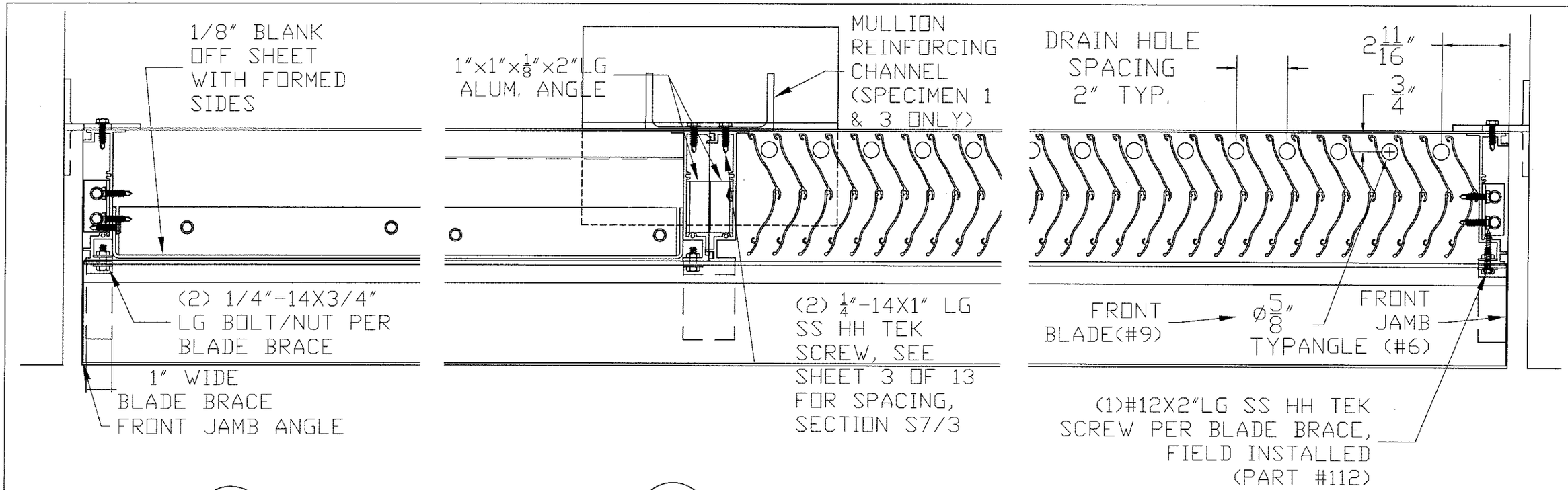

DETAIL G/5

DETAIL H/5

DETAIL J/5

DETAIL K/5

SPECIAL SHAPE LOUVERS ONLY

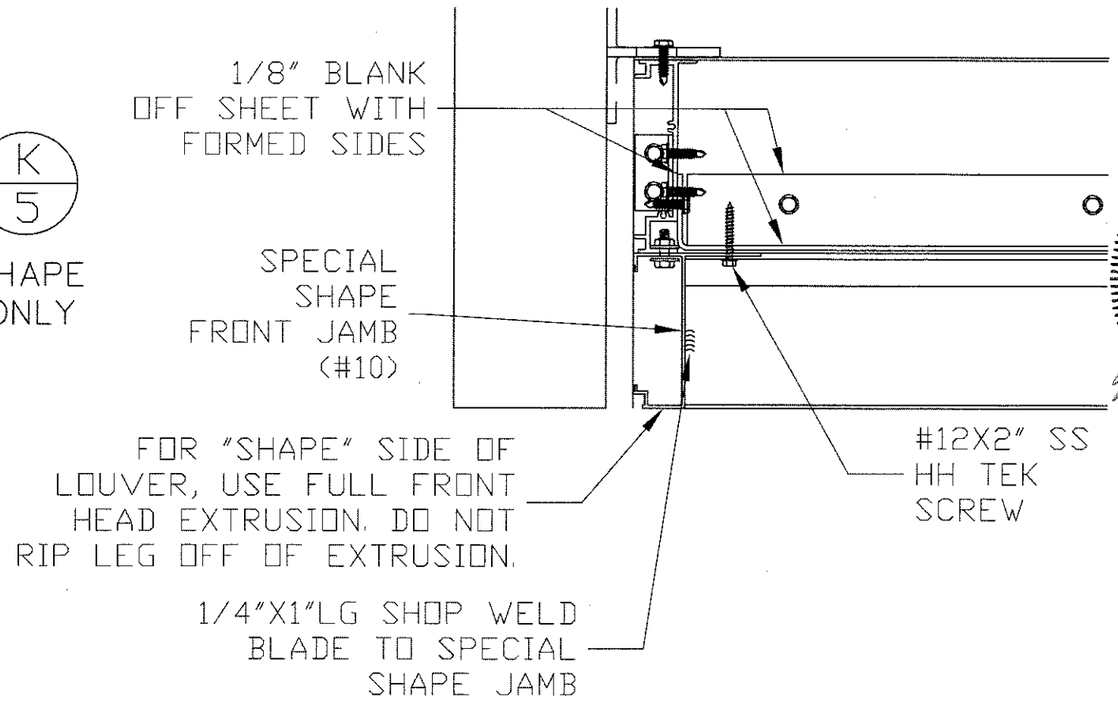

Approved as complying with the Florida Building Code
Date 01/28/2016
NOA# 16-0122.04
Miami Dade Product Control
By

L. DAVID RICE
LICENSED
No. 50923
STATE OF FLORIDA
PROFESSIONAL ENGINEER

MAY 23 2016

RICE ENGINEERING
105 School Creek Trail
Luxemburg, WI 54217
Phone: (920) 617-1042
Fax: (920) 617-1100
www.rice-inc.com

Florida Firm No: F-01000005061
Certificate of Authorization: #9090
L. David Rice
Registration No: 50923

1" X 1-1/2" X 1/8" X 2" LG ALUM ANGLE ATTACHED TO HEAD AND JAMB, AND SILL AND JAMB (SECURED WITH (4) 1/4"-14X1"LG SS HH TEK SCREW, ITEM #100)

#8 X 1-1/2" LG SS PH SMS FOR ASSEMBLING JAMBS AND BLADES TO HEAD AND SILL (REAR COMPONENTS ONLY)

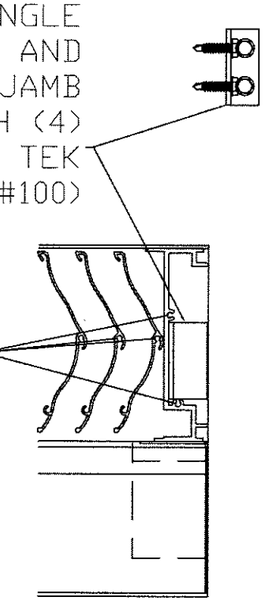

REVISION:
DATE: 11-20-15
SHEET: 5 OF 13
DRW NO: RD-1457

PROJECT: DC-9614 SUBMITTAL DRAWINGS
TITLE: LOUVER ASSEMBLY DETAILS PART B
SCALE: 3" = 1'-0"
DRW BY: R. GEIST

Construction Specialties™
49 MEEKER AVENUE, CRANFORD, NEW JERSEY
PHONE: 1-800-631-7379 / FAX: 908-272-5844

1	REAR HEAD	6063-T6 ALUMINUM 0.080 THK
2	REAR SILL	6063-T6 ALUMINUM 0.080 THK
3	REAR JAMB/MULLION HALF	6063-T6 ALUMINUM 0.125 THK
4	REAR MULLION HALF	6063-T6 ALUMINUM 0.125 THK
5	FRONT HEAD AND SILL	6063-T6 ALUMINUM 0.080 THK
6	FRONT JAMB ANGLE	1-3/8"x4.077"x0.080" FORMED ALUMINUM ANGLE
7	FRONT BLADE BRACE	6063-T6 ALUMINUM - 1" WIDE AT JAMBS, 2" WIDE AT MULLIONS
8	REAR BLADE	6063-T6 ALUMINUM 0.060 THK
9	FRONT BLADE	6063-T6 ALUMINUM 0.068 THK
10	SPECIAL SHAPE FRONT JAMB	6063-T6 ALUMINUM 0.080 THK
11	MULLION REINFORCING CHANNEL	5" X 2.212# ALUMINUM ASSOCIATION CHANNEL 6061-T6
12	SHEET SPLICE MID SUPPORT	6063-T6 ALUMINUM EXTRUSION TUBE 0.068 MIN. THICKNESS
13	SHEET BLANK OFF	1/8" ALUMINUM SHEET BLANK OFF WITH 2" FORMED SIDES, 1/8" MINIMUM THICKNESS
50	JAMB AND MID SPAN ALUM. CLIP ANGLE	3"x2"x1/4"x6" LG 6061-T6 ALUMINUM (WOOD SUBSTRATE)
51	ALUM. JAMB CLIP ANGLE	3"x2"x1/4"x4" LG 6061-T6 ALUMINUM (STRUCTURAL STEEL, CONCRETE AND CMU SUBSTRATES)
52	ALUM. JAMB SHELF ANGLE	6"x4"x3/8"x4-1/2" LG 6061-T6 ALUMINUM (CONCRETE SUBSTRATE)
53	ALUM. JAMB SHELF ANGLE	6"x4"x3/8"x10" LG 6061-T6 ALUMINUM (CMU SUBSTRATE)
54	ALUM. JAMB CLIP ANGLE	3"x2"x1/4"x4" LG 6061-T6 ALUMINUM (STEEL STUD AND ALUMINUM SUBSTRATES)
55	ALUM CLIP ANGLE (MID-SPAN JAMB TO MULLION)	3"x2"x1/4"x6" LG 6061-T6 ALUMINUM (STEEL STUD SUBSTRATE)
56	ALUM CLIP ANGLE (MID-SPAN JAMB TO MULLION)	3"x2"x1/4"x6" LG 6061-T6 ALUMINUM (STRUCTURAL STEEL AND CMU SUBSTRATE)
57	ALUM CLIP ANGLE (MID-SPAN JAMB TO MULLION)	3"x3"x1/4"x6" LG 6061-T6 ALUMINUM (CONCRETE SUBSTRATE)
58	ALUM. SHELF ANGLE (MID-SPAN JAMB TO MULLION)	6"x4"x3/8"x6" LG 6061-T6 ALUMINUM (CONCRETE SUBSTRATE)
59	ALUM. SHELF ANGLE (MID-SPAN JAMB TO MULLION)	6"x6"x3/8"x10" LG 6061-T6 ALUMINUM (CMU SUBSTRATE)
60	ALUM CLIP ANGLE (MID-SPAN JAMB TO MULLION)	3"x2"x1/4"x6" LG 6061-T6 ALUMINUM (ALUMINUM SUBSTRATE)
61	ALUM CLIP ANGLE (MID-SPAN JAMB TO MULLION)	6"x4"x3/8"x4" LG 6061-T6 ALUMINUM (CONCRETE SUBSTRATE)
63	ALUM. MULLION CLIP ANGLE	4"x4"x1/4"x11" LG 6061-T6 ALUMINUM (STEEL STUD SUBSTRATE)
64	ALUM. MULLION CLIP ANGLE	4"x4"x1/4"x11" LG 6061-T6 ALUMINUM (STRUCTURAL STEEL SUBSTRATE)
65	ALUM. MULLION CLIP ANGLE	4"x4"x1/4"x11" LG 6061-T6 ALUMINUM (CONCRETE SUBSTRATE)
66	ALUM. MULLION SHELF ANGLE	6"x4"x3/8"x27" LG 6061-T6 ALUMINUM (CONCRETE SUBSTRATE)
67	ALUM. MULLION CLIP ANGLE	4"x4"x1/4"x20" LG 6061-T6 ALUMINUM (CMU SUBSTRATE)
68	ALUM. MULLION SHELF ANGLE	8"x6"x5/8"x34" LG 6061-T6 ALUMINUM (CMU SUBSTRATE)
69	ALUM. MULLION CLIP ANGLE	4"x4"x1/4"x20" LG 6061-T6 ALUMINUM (WOOD SUBSTRATE)
70	ALUM. MULLION CLIP ANGLE	4"x4"x1/4"x11" LG 6061-T6 ALUMINUM (ALUMINUM SUBSTRATE)
71	ALUM. MULLION CLIP ANGLE	6"x4"x3/8"x20" LG 6061-T6 ALUMINUM (CONCRETE SUBSTRATE)
80	STEEL STUD	16 GA MINIMUM GALVANIZED STRUCTURAL STEEL STUD, Fy=33Ksi
81	STRUCTURAL STEEL	1/8" THK MIN. (ASTM A36)
82	ALUMINUM	1/8" THK. MIN (6063-T5)
83	CONCRETE	4000 LB MIN. CONCRETE - CRACKED, NORMAL WEIGHT
84	CMU	GROUT FILLED CONCRETE MASONRY UNIT (1500 PSI, ASTM C90, TYPE II WITH MIN. 2000 PSI GROUT)
85	WOOD	G = 0.42 MINIMUM, SPRUCE PINE-FIR, 3" MIN. THICKNESS
100	1/4"-14 X 1" LG TEK SELF DRILLING SCREW	THREAD FORMING OR SELF DRILL S.S FOR ALUM. / PLATED CARBON STEEL FOR STEEL
101	1/4"-14 X 1-1/2" LG SCREW	THREAD FORMING OR SELF DRILL S.S FOR ALUM. / PLATED CARBON STEEL FOR STEEL
102	1/2" HILTI KWIK BOLT TZ	SS 304/316, EMBEDMENT MINIMUM OF 3-5/8"
103	1/2"X3" LAG SCREW	SS OR PLATED CARBON STEEL WOOD SCREW, MIN. EMBEDMENT 2-3/4", MIN EDGE/END DISTANCE 2" (PREDRILL HOLES @40-70% DIAMETER)
104	1/2" HILTI HIT-HY 70 HYBRID	ADHESIVE ANCHOR W/ASTM F593 CW 304/316 S.S. THREADED RODS, *ONLY ONE ANCHOR PER MASONRY CELL
105	1/2" HILTI KWIK BOLT TZ	SS 304/316, EMBEDMENT MINIMUM OF 2-3/8"
110	1/4"-14 X 1-1/2" LG (MIN) BOLT, NUT & WASHER	1/4 - 14 SS ALLOY GROUP 1, 2 OR 3 CONDITION CW NUT, BOLT AND LOCKWASHER
111	3/8"-12 X 1-1/2" LG (MIN.) NUT AND BOLT	3/8 - 12 S.S. ALLOY GROUP 1, 2, OR 3 CONDITION CW WITH LOCK WASHER
112	#12 SELF DRILLING SCREW	#12-24 x 2" S.S. ELCO BIFLEX SELF DRILLING SCREW WITH NO 5 POINT

Approved as complying with the Florida Building Code
Date 07/28/2016
NOA# 16-0722.04
Miami Dade Product Control
By

L. DAVID RICE
LICENSE
No. 50923
STATE OF FLORIDA
PROFESSIONAL ENGINEER

MAY 23 2016

RICE
ENGINEERING
105 School Creek Trail
Luxemburg, WI 54217
Phone: (920) 617-1042
Fax: (920) 617-1100
www.rice-inc.com

Florida Firm No: F-01000005061
Certificate of Authorization: #9090
L. David Rice
Registration No: 50923

PROJECT: DC-9614 SUBMITTAL DRAWINGS
TITLE: PARTS LIST
SCALE: 3" = 1'-0"
DRW BY: R. GEIST

REVISION:
DATE: 11-20-15
SHEET: 6 OF 13
DRW NO : RD-1457

Construction Specialties™
49 MEEKER AVENUE, CRANFORD, NEW JERSEY
PHONE: 1-800-631-7379 / FAX: 908-272-5844

1 - REAR HEAD

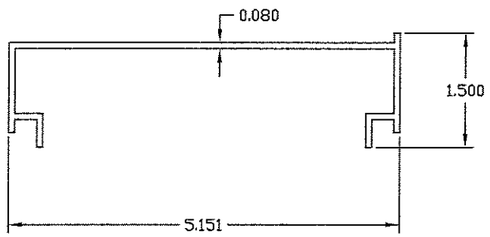

2 - REAR SILL

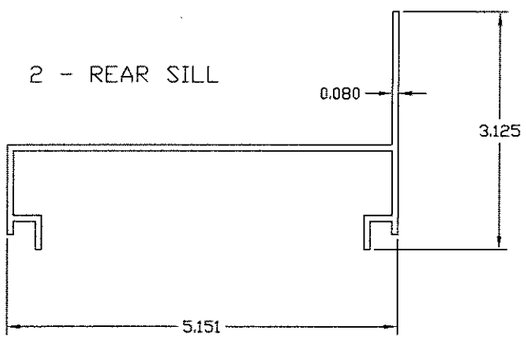

3 - REAR JAMB/MULLION HALF

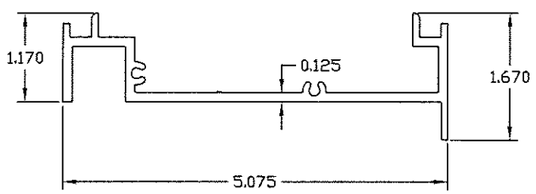

4 - REAR MULLION HALF

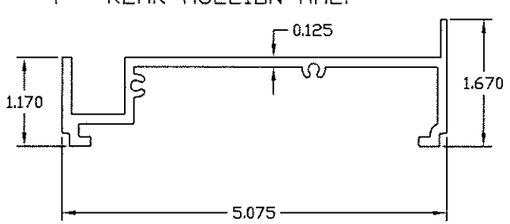

5 - FRONT HEAD & SILL

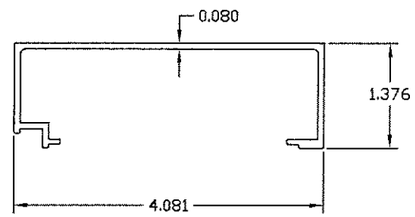

6 - FRONT JAMB ANGLE

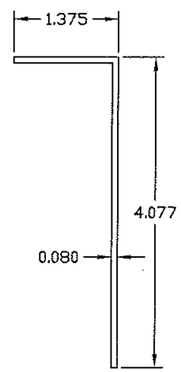

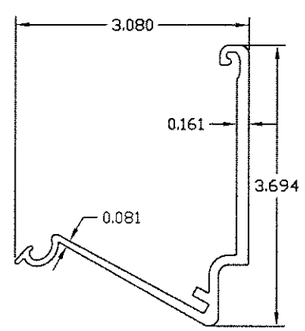

7 - FRONT BLADE BRACE

8 - REAR BLADE

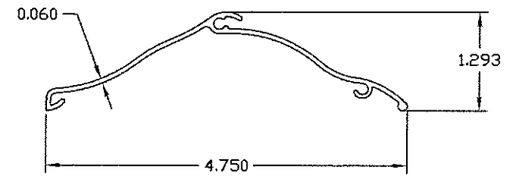

9 - FRONT BLADE

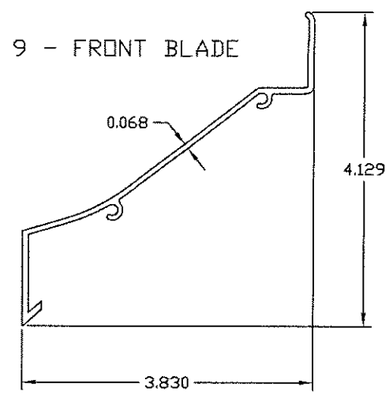

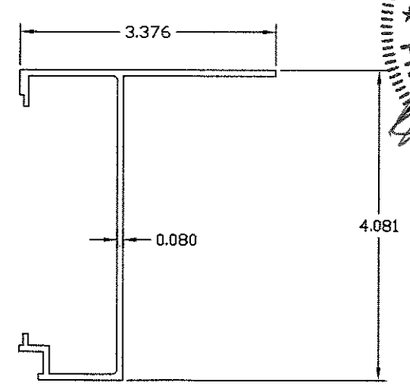

10 - SPECIAL SHAPE FRONT JAMB

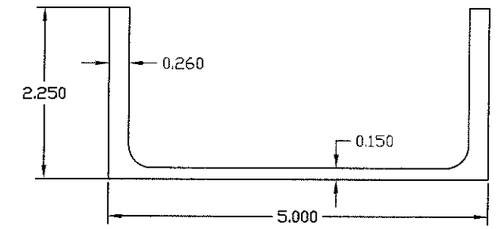

11 - MULLION REINFORCING CHANNEL

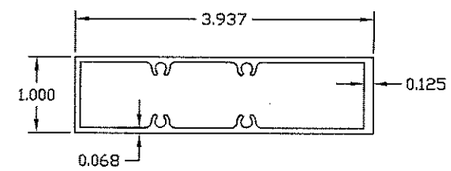

12 - SHEET SPLICE MID SUPPORT

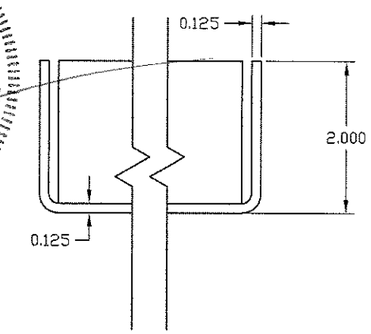

13 - SHEET BLANK OFF FOR INACTIVE LOUVERS

L. DAVID RICE
LICENSED
No. 50923
STATE OF FLORIDA
PROFESSIONAL ENGINEER
MAY 23 2016

Approved as complying with the Florida Building Code
Date 07/28/2016
NOA# 16-0222.04
Miami Dade Product Control
By

RICE ENGINEERING
105 School Creek Trail
Luxemburg, WI 54217
Phone: (920) 617-1042
Fax: (920) 617-1100
www.rice-inc.com

Florida Firm No: F-01000005061
Certificate of Authorization: #9090
L. David Rice
Registration No: 50923

REVISION:
DATE: 11-20-15
SHEET: 7 OF 13
DRW NO : RD-1457

PROJECT: DC-9614 SUBMITTAL DRAWINGS
TITLE: PARTS DRAWING
SCALE: 6" = 1'-0"
DRW BY: R. GEIST

Construction Specialties™
49 MEEKER AVENUE, CRANFORD, NEW JERSEY
PHONE: 1-800-631-7379 / FAX: 908-272-5844

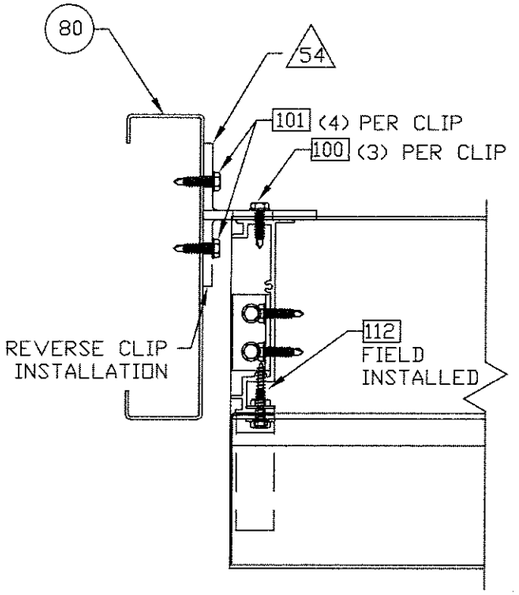

16 Ga MIN GALVANIZED
STRUCTURAL STEEL STUD
Fy = 33 Ksi

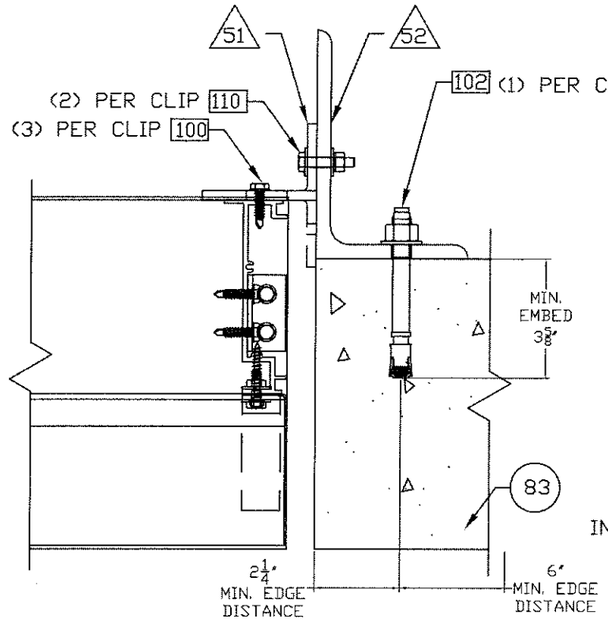

CONCRETE
4000 LB MIN

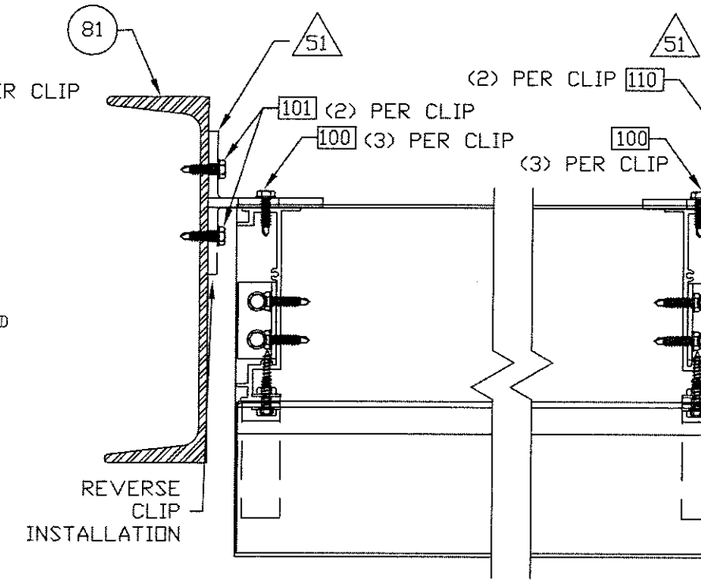

1/8" MINIMUM
STRUCTURAL STEEL
ASTM A36

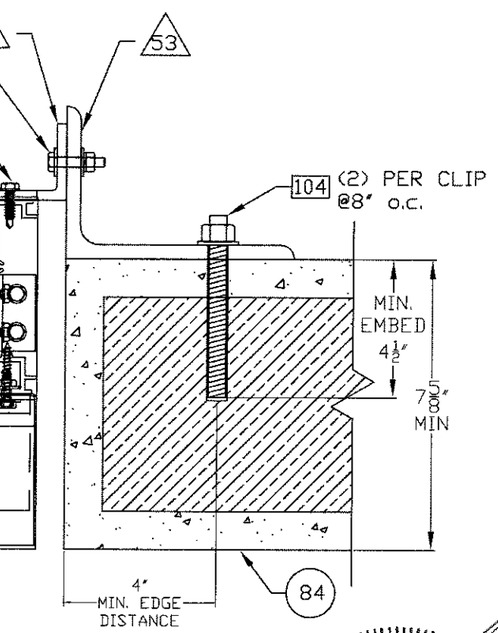

GROUT FILLED CMU
(2,000 PSI MIN.)
*ONLY ONE ANCHOR
PER MASONRY CELL

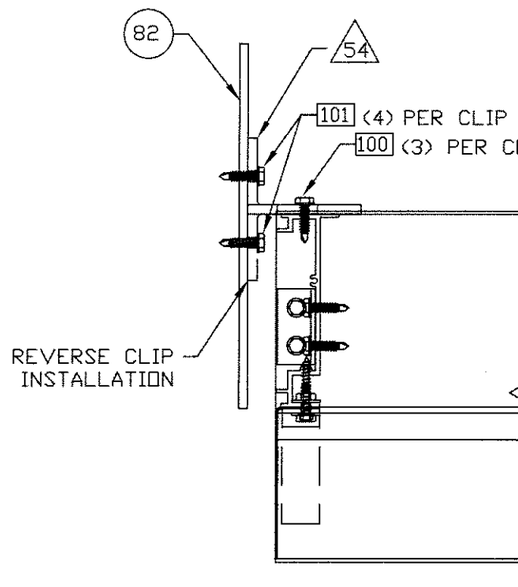

1/8" MINIMUM ALUMINUM
6063-T5

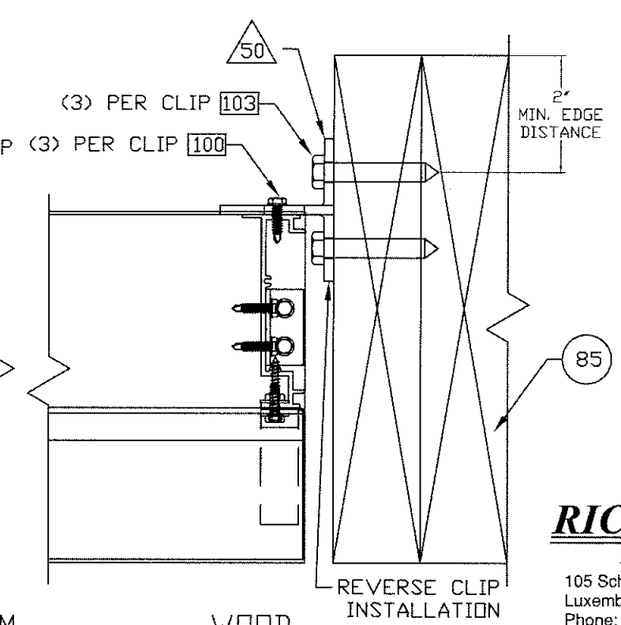

WOOD
G=0.42 MIN.
3" MIN. THICKNESS

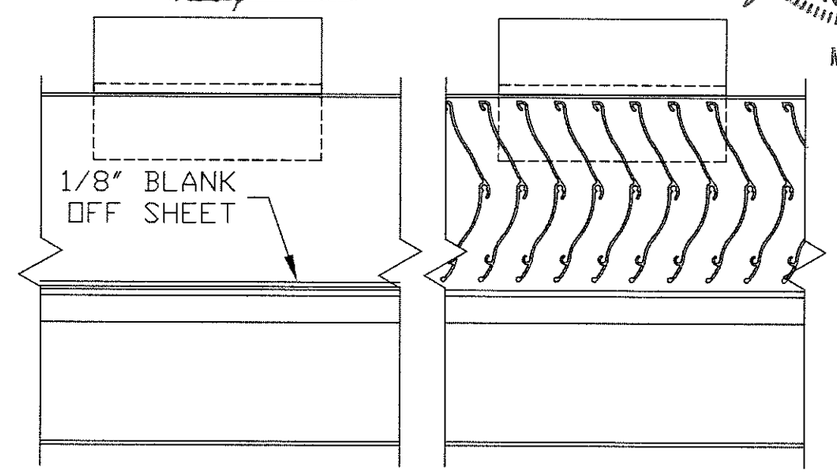

SEE MID-SPAN MOUNTING CONDITIONS (FOLLOWING SHEET) FOR ANGLES TO BE USED BETWEEN JAMBS AND MULLIONS. LOUVERS OF SPECIAL SHAPE (TRIANGULAR) USE MID-SPAN ANGLES ALONG THE SLOPED SIDE FOR ALL ATTACHMENTS EXCEPT MULLION ATTACHMENTS, WHICH WILL USE THE STANDARD MULLION ATTACHMENT FOR THE APPROPRIATE SUBSTRATE.

REAR BLADES AND 1/8" ALUM. BLANK OFF HIDDEN FOR CLARITY

Approved as complying with the Florida Building Code
Date 01/28/2016
NOA# 16-0222.04
Miami Dade Product Control
By

L. DAVID RICE
LICENSED
No. 50923
STATE OF FLORIDA
PROFESSIONAL ENGINEER

MAY 23 2016

RICE
ENGINEERING
105 School Creek Trail
Luxemburg, WI 54217
Phone: (920) 617-1042
Fax: (920) 617-1100
www.rice-inc.com

Florida Firm No: F-01000005061
Certificate of Authorization: #9090
L. David Rice
Registration No: 50923

REVISION:	
DATE: 11-20-15	
SHEET: 8 OF 13	
DRW NO : RD-1457	
PROJECT: DC-9614 SUBMITTAL DRAWINGS	
TITLE: JAMB MOUNTING CONDITIONS	
SCALE: 3" = 1'-0"	
DRW BY: R. GEIST	

Construction Specialties™
49 MEEKER AVENUE, CRANFORD, NEW JERSEY
PHONE: 1-800-631-7379 / FAX: 908-272-5844

RICE
ENGINEERING
105 School Creek Trail
Luxemburg, WI 54217
Phone: (920) 617-1042
Fax: (920) 617-1100
www.rice-inc.com

Florida Firm No: F-01000005061
Certificate of Authorization: #9090
L. David Rice
Registration No: 50923

L. DAVID RICE
LICENSED
No. 50923
STATE OF FLORIDA
PROFESSIONAL ENGINEER

MAY 23 2016

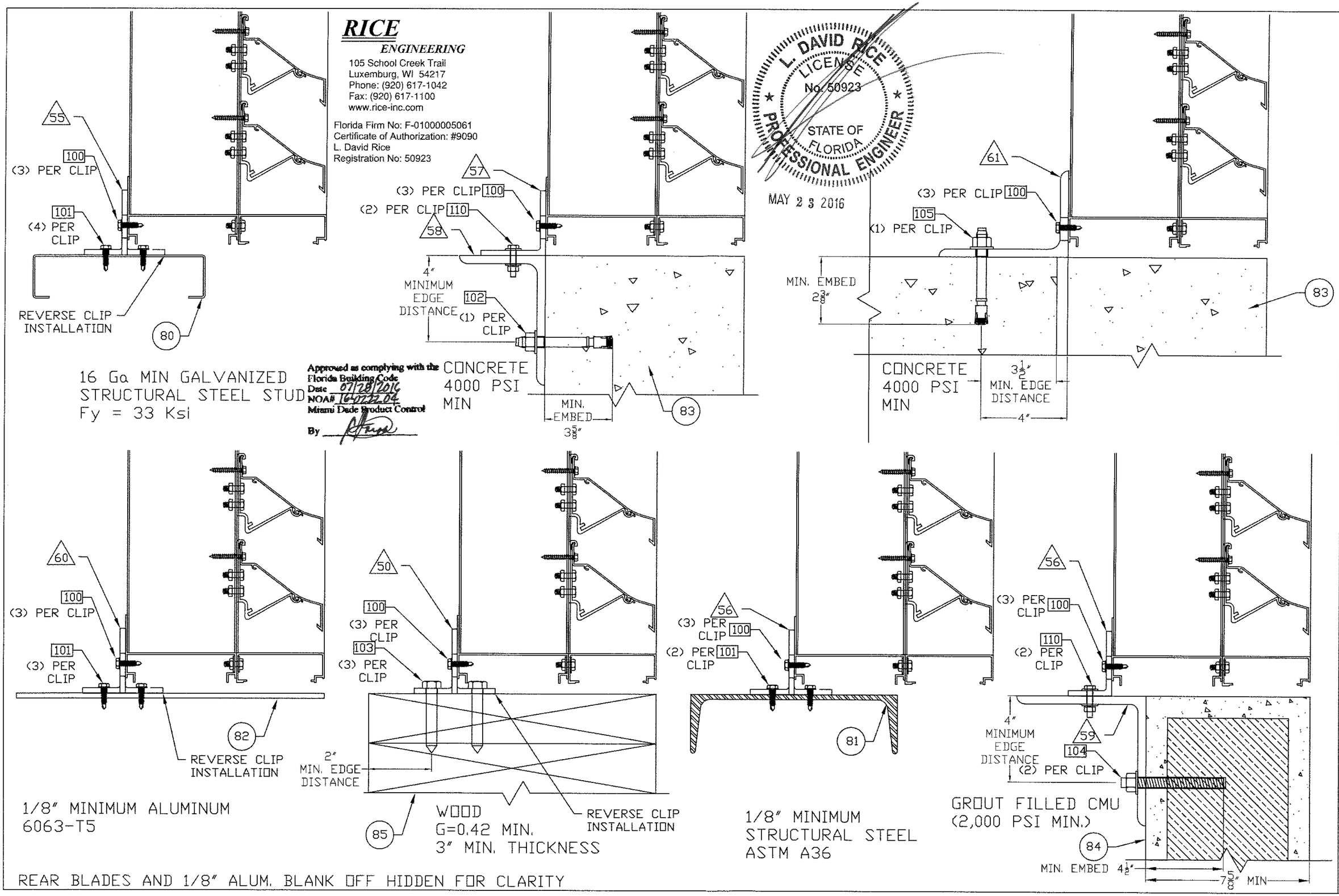

Approved as complying with the Florida Building Code
Date 07/28/2016
NOA# 16-0722.04
Miami Dade Product Control
By

REAR BLADES AND 1/8" ALUM. BLANK OFF HIDDEN FOR CLARITY

REVISION:	
DATE: 11-20-15	
SHEET: 9 OF 13	
DRW NO : RD-1457	
PROJECT: DC-9614 SUBMITTAL DRAWINGS	
TITLE: MID SPAN MOUNTING CONDITIONS	
SCALE: 3" = 1'-0"	
DRW BY: R. GEIST	

Construction Specialties™
49 MEEKER AVENUE, CRANFORD, NEW JERSEY
PHONE: 1-800-631-7379 / FAX: 908-272-5844

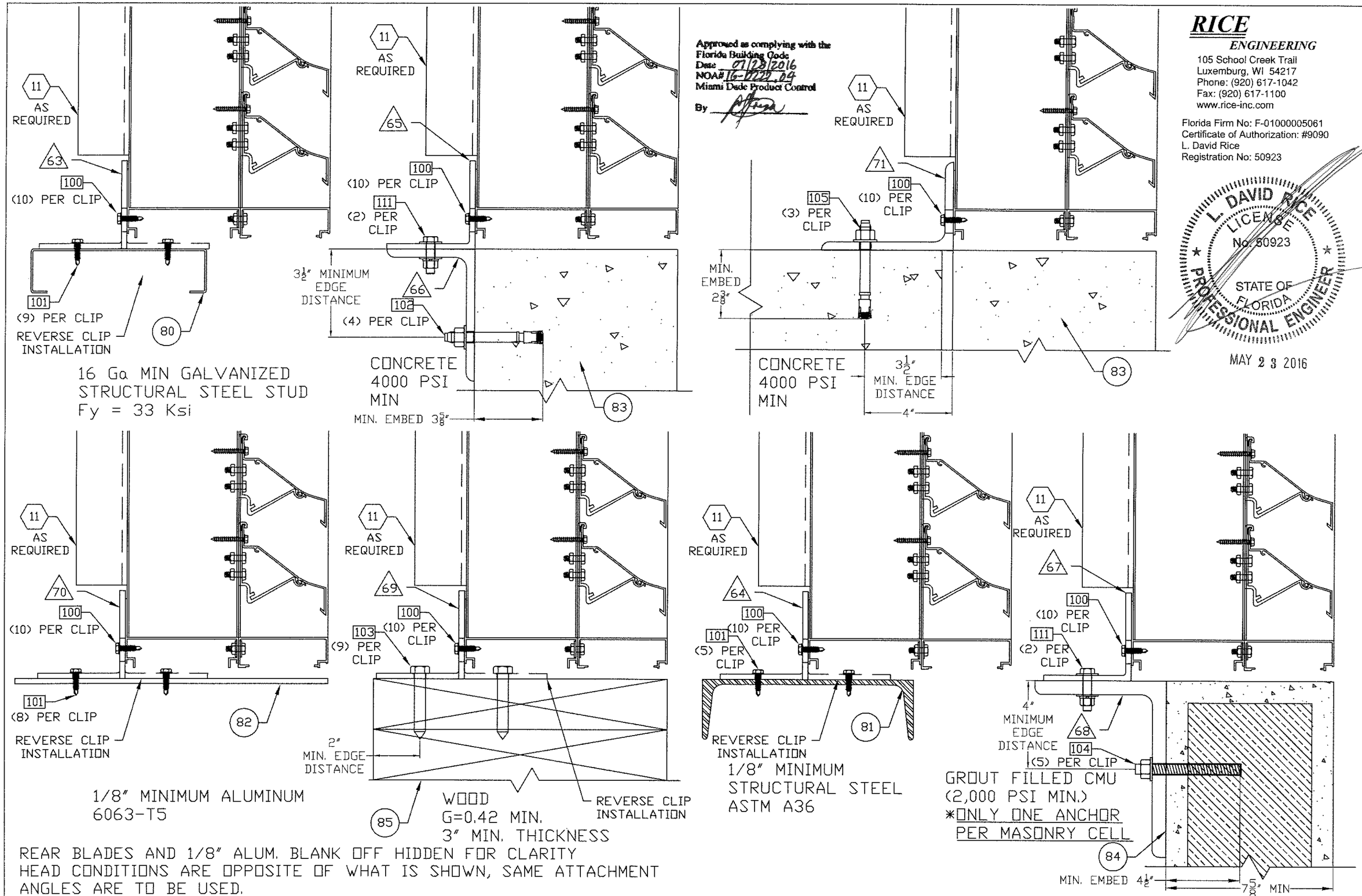

Approved as complying with the Florida Building Code
Date: 07/28/2016
NOA# 16-0727.04
Miami Dade Product Control
By

RICE
ENGINEERING
105 School Creek Trail
Luxemburg, WI 54217
Phone: (920) 617-1042
Fax: (920) 617-1100
www.rice-inc.com

Florida Firm No: F-01000005061
Certificate of Authorization: #9090
L. David Rice
Registration No: 50923

L. DAVID RICE LICENSE No. 50923 STATE OF FLORIDA PROFESSIONAL ENGINEER

MAY 23 2016

REVISION:
DATE: 11-20-15
SHEET: 10 OF 13
DRW NO: RD-1457

PROJECT: DC-9614 SUBMITTAL DRAWINGS
TITLE: MULLION MOUNTING CONDITIONS
SCALE: 3" = 1'-0"
DRW BY: R. GEIST

Construction Specialties™
49 MEEKER AVENUE, CRANFORD, NEW JERSEY
PHONE: 1-800-631-7379 / FAX: 908-272-5844

REAR BLADES AND 1/8" ALUM. BLANK OFF HIDDEN FOR CLARITY
HEAD CONDITIONS ARE OPPOSITE OF WHAT IS SHOWN, SAME ATTACHMENT ANGLES ARE TO BE USED.

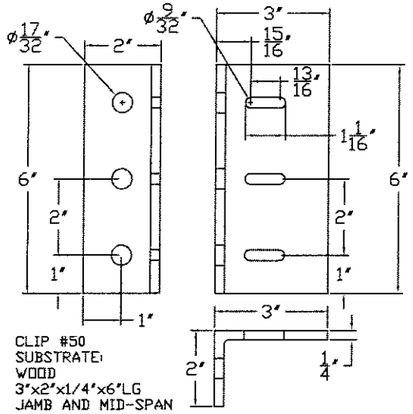

CLIP #50
SUBSTRATE:
WOOD
3"x2"x1/4"x6"LG
JAMB AND MID-SPAN
ALUM. CLIP ANGLE

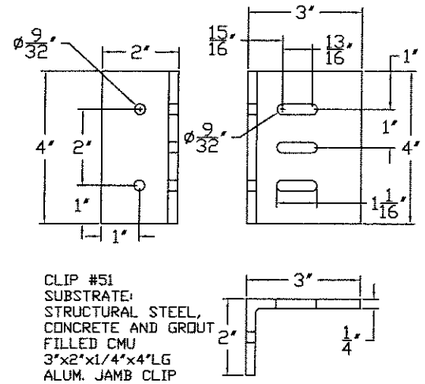

CLIP #51
SUBSTRATE:
STRUCTURAL STEEL,
CONCRETE AND GROUT
FILLED CMU
3"x2"x1/4"x4"LG
ALUM. JAMB CLIP
ANGLE

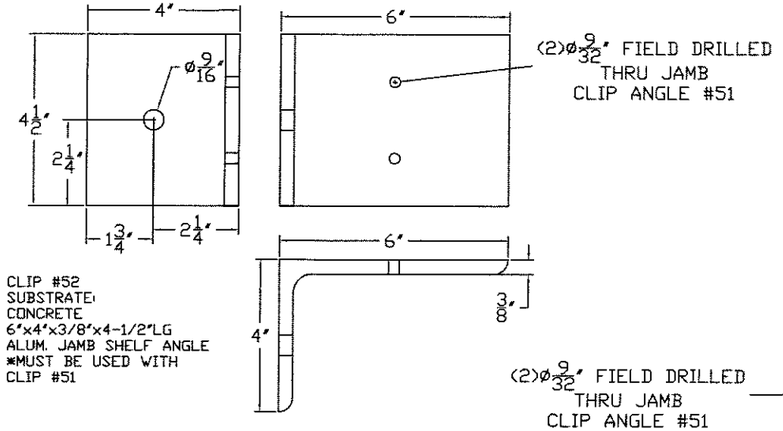

CLIP #52
SUBSTRATE:
CONCRETE
6"x4"x3/8"x4-1/2"LG
ALUM. JAMB SHELF ANGLE
*MUST BE USED WITH
CLIP #51

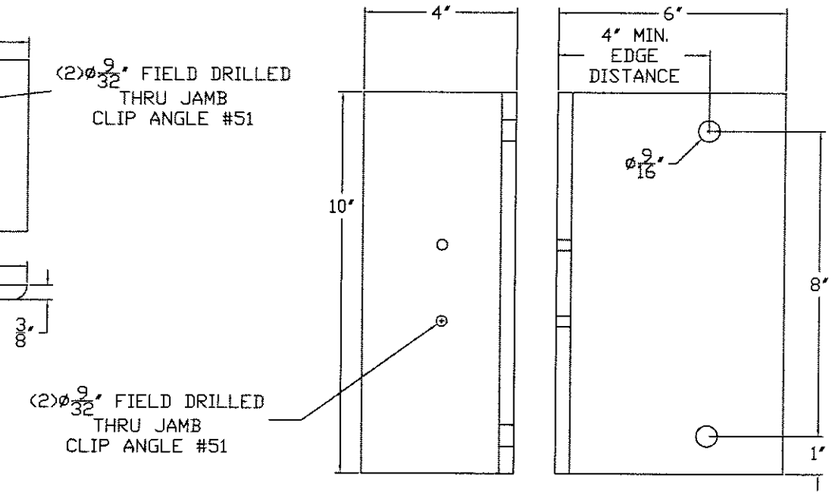

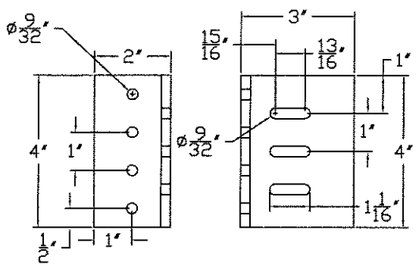

CLIP #54
SUBSTRATE:
STEEL STUD,
AND ALUMINUM
3"x2"x1/4"x4"LG
ALUM. JAMB CLIP
ANGLE

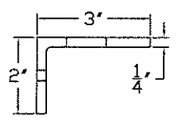

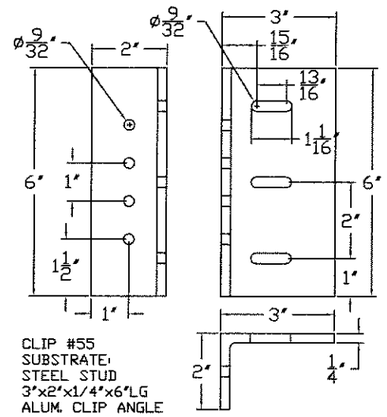

CLIP #55
SUBSTRATE:
STEEL STUD
3"x2"x1/4"x6"LG
ALUM. CLIP ANGLE
MID-SPAN B/W
JAMB AND MULLION

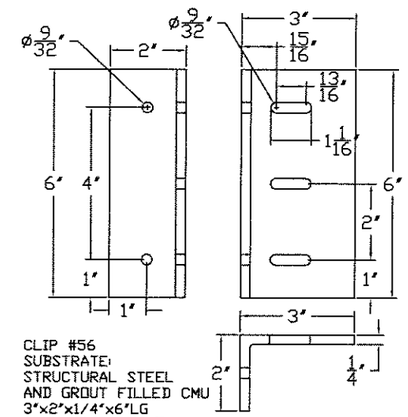

CLIP #56
SUBSTRATE:
STRUCTURAL STEEL
AND GROUT FILLED CMU
3"x2"x1/4"x6"LG
ALUM. CLIP ANGLE
MID-SPAN B/W JAMB
AND MULLION

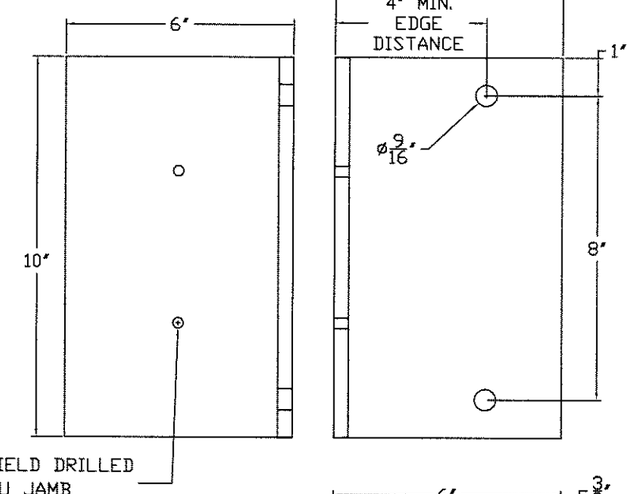

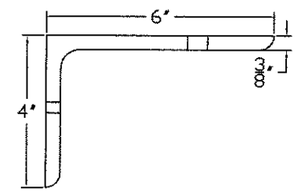

CLIP #53
SUBSTRATE:
GROUT FILLED CMU
6"x4"x3/8"x10"LG
ALUM. JAMB SHELF ANGLE
*MUST BE USED WITH
CLIP #51

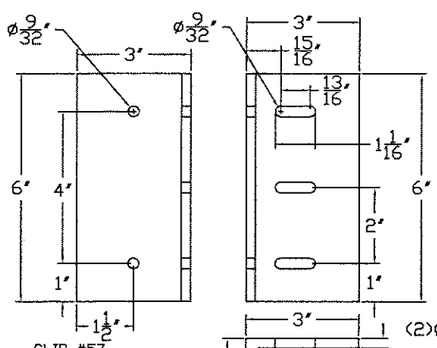

CLIP #57
SUBSTRATE:
CONCRETE
3"x3"x1/4"x6"LG
ALUM. CLIP ANGLE
MID-SPAN B/W JAMB
AND MULLION

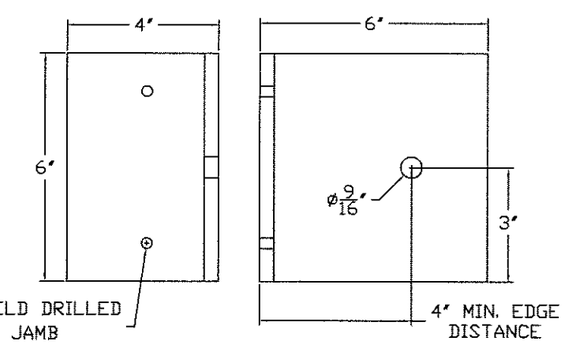

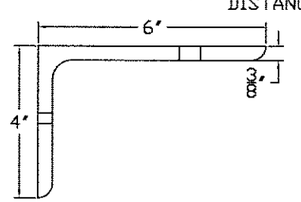

CLIP #58
SUBSTRATE:
CONCRETE
6"x4"x3/8"x6"LG
ALUM. SHELF ANGLE
MID-SPAN B/W JAMB
AND MULLION
*MUST BE USED WITH
CLIP #57

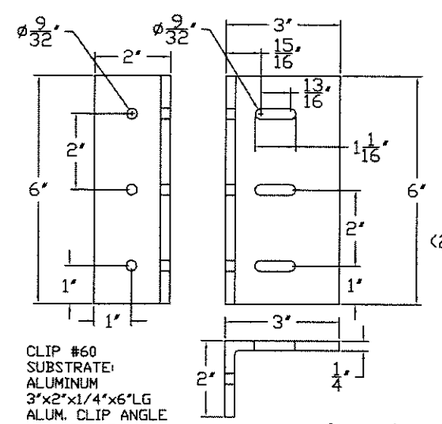

CLIP #60
SUBSTRATE:
ALUMINUM
3"x2"x1/4"x6"LG
ALUM. CLIP ANGLE
MID-SPAN B/W
JAMB AND MULLION

CLIP #59
SUBSTRATE:
GROUT FILLED CMU
6"x6"x3/8"x10"LG
ALUM. SHELF ANGLE
MID-SPAN B/W JAMB
AND MULLION
*MUST BE USED WITH
CLIP #56

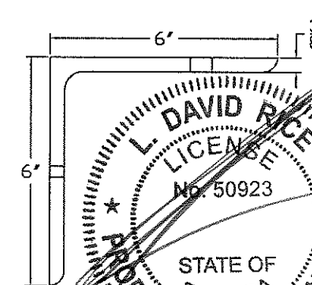

Approved as complying with the
Florida Building Code
Date 01/28/2016
NOA# 16-0122.04
Miami Dade Product Control
By

MAY 23 2016

L. DAVID RICE
LICENSE
No. 50923
STATE OF
FLORIDA
PROFESSIONAL ENGINEER

REVISION:	
DATE: 11-20-15	
SHEET: 11 OF 13	
DRW NO : RD-1457	
PROJECT: DC-9614 SUBMITTAL DRAWINGS	
TITLE: CLIP ANGLES PART A	
SCALE: 3" = 1'-0"	
DRW BY: R. GEIST	

Construction Specialties™
49 MEEKER AVENUE, CRANFORD, NEW JERSEY
PHONE: 1-800-631-7379 / FAX: 908-272-5844

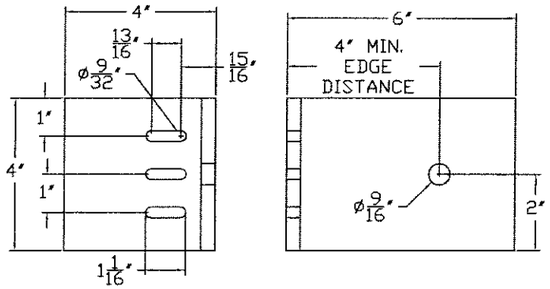

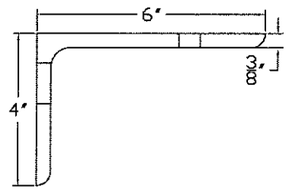

CLIP #61
SUBSTRATE:
CONCRETE
6"x4"x3/8"x4"LG
ALUM. CLIP ANGLE
MID-SPAN B/W JAMB
AND MULLION

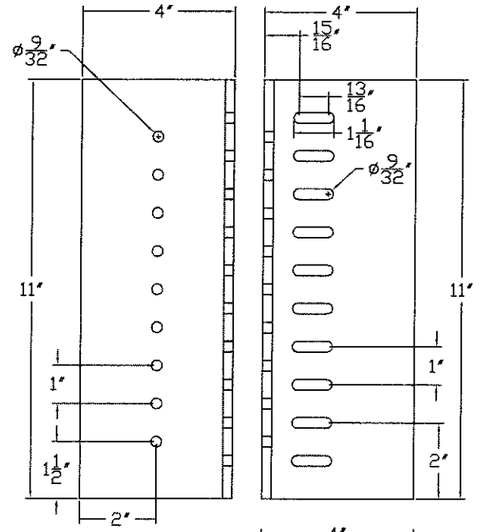

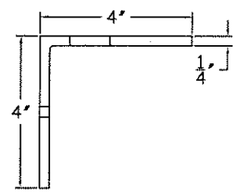

CLIP #63
SUBSTRATE:
STEEL STUD
4"x4"x1/4"x11"LG
ALUM. MULLION CLIP
ANGLE

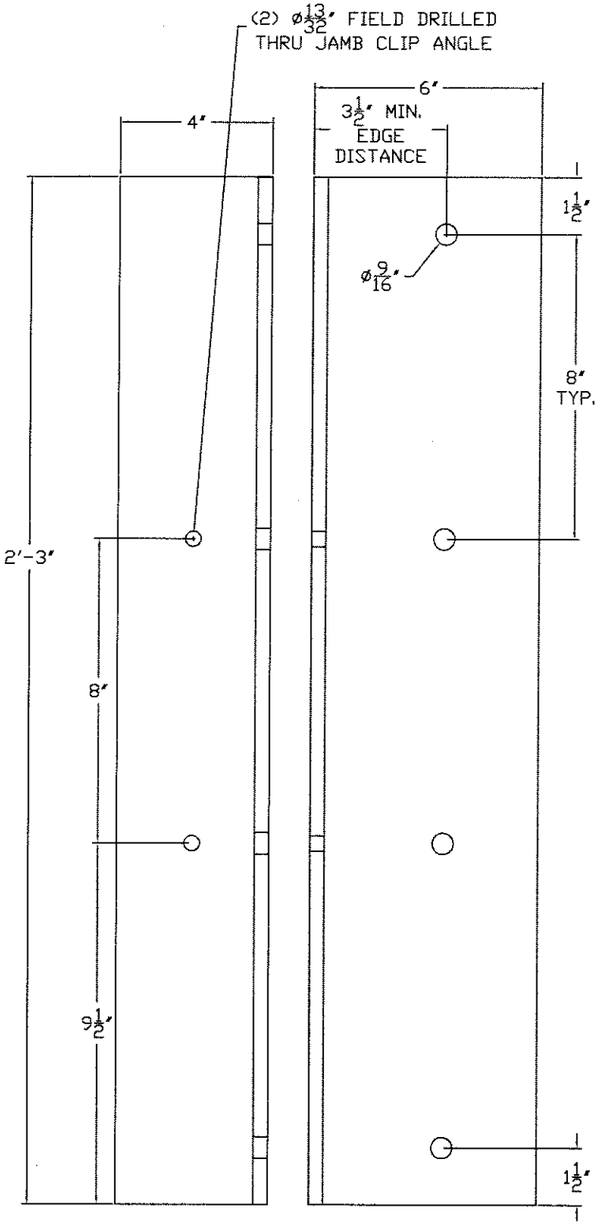

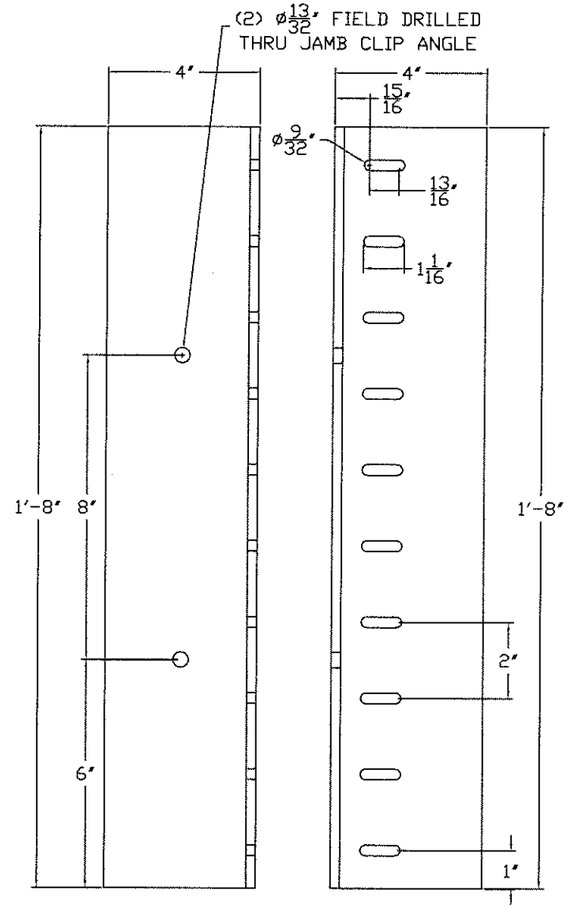

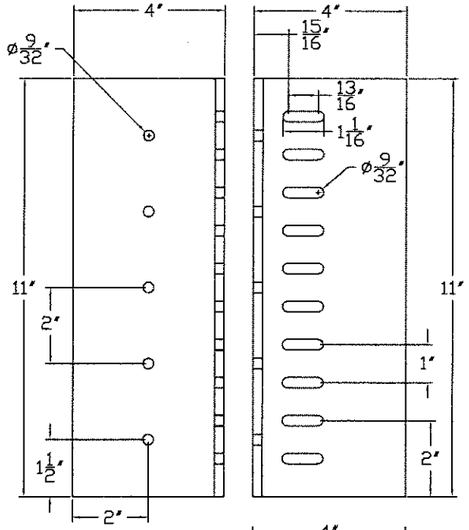

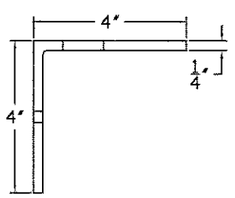

CLIP #64
SUBSTRATE:
STRUCTURAL STEEL
4"x4"x1/4"x11"LG
ALUM. MULLION CLIP
ANGLE

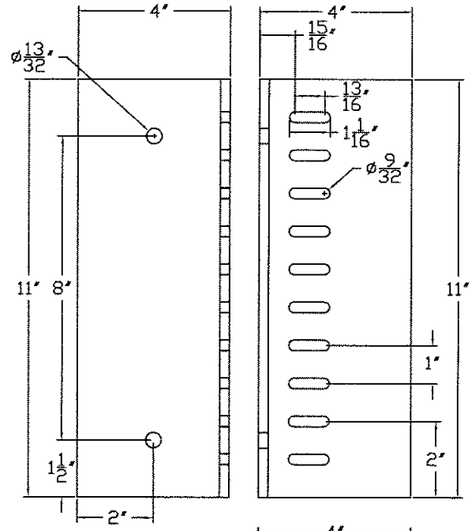

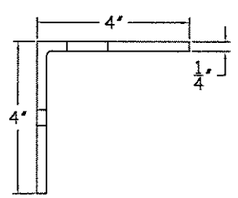

CLIP #65
SUBSTRATE:
CONCRETE
4"x4"x1/4"x11"LG
ALUM. MULLION CLIP
ANGLE

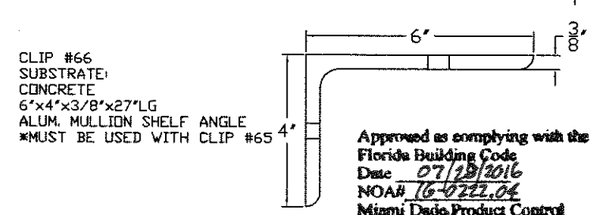

CLIP #66
SUBSTRATE:
CONCRETE
6"x4"x3/8"x27"LG
ALUM. MULLION SHELF ANGLE
*MUST BE USED WITH CLIP #65

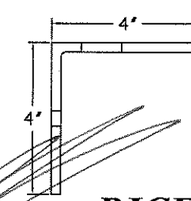

CLIP #67
SUBSTRATE:
GROUT FILLED CMU
4"x4"x1/4"x20"LG
ALUM. MULLION CLIP
ANGLE

Approved as complying with the
Florida Building Code
Date 07/28/2016
NOA# 16-0222.04
Miami Dade Product Control
By

MAY 23 2016

L. DAVID RICE
LICENSE
No. 50923
STATE OF
FLORIDA
PROFESSIONAL ENGINEER

RICE
ENGINEERING
105 School Creek Trail
Luxemburg, WI 54217
Phone: (920) 617-1042
Fax: (920) 617-1100
www.rice-inc.com

Florida Firm No: F-01000005061
Certificate of Authorization: #9090
L. David Rice
Registration No: 50923

REVISION:	
DATE: 11-20-15	
SHEET: 12 OF 13	
DRW NO : RD-1457	
PROJECT: DC-9614 SUBMITTAL DRAWINGS	
TITLE: CLIP ANGLES PART B	
SCALE: 3" = 1'-0"	
DRW BY: R. GEIST	

Construction Specialties™
49 MEEKER AVENUE, CRANFORD, NEW JERSEY
PHONE: 1-800-631-7379 / FAX: 908-272-5844

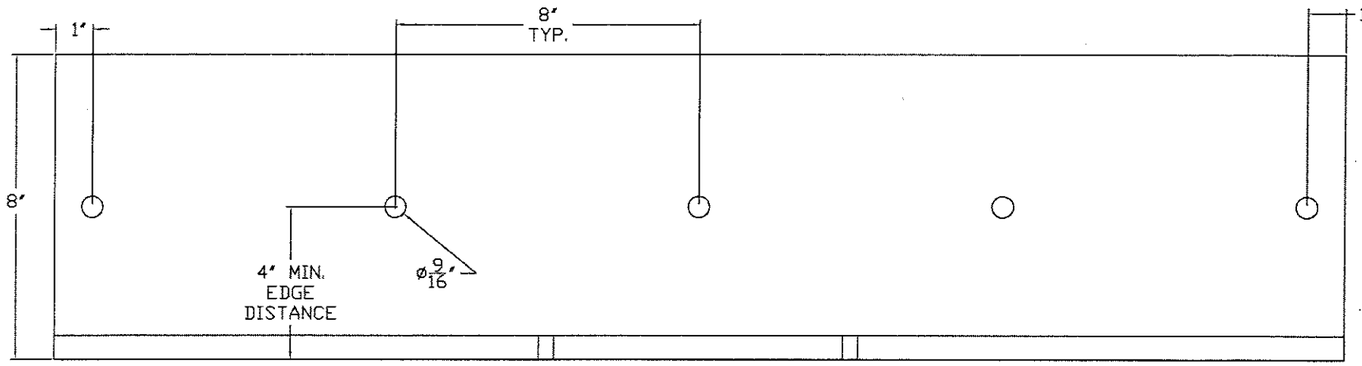

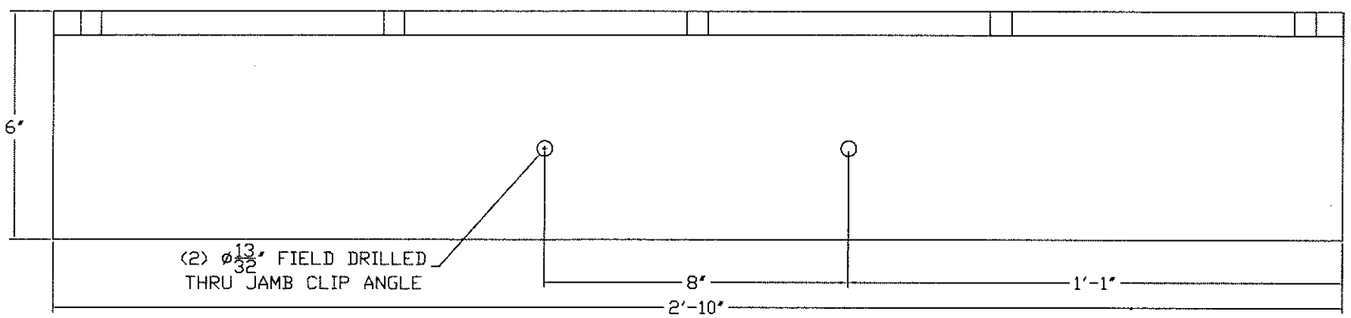

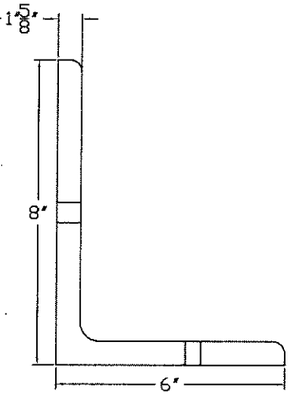

CLIP #68
SUBSTRATE:
GROUT FILLED CMU
8"x6"x5/8"x34"LG
ALUM. MULLION SHELF ANGLE
*MUST BE USED WITH CLIP #67

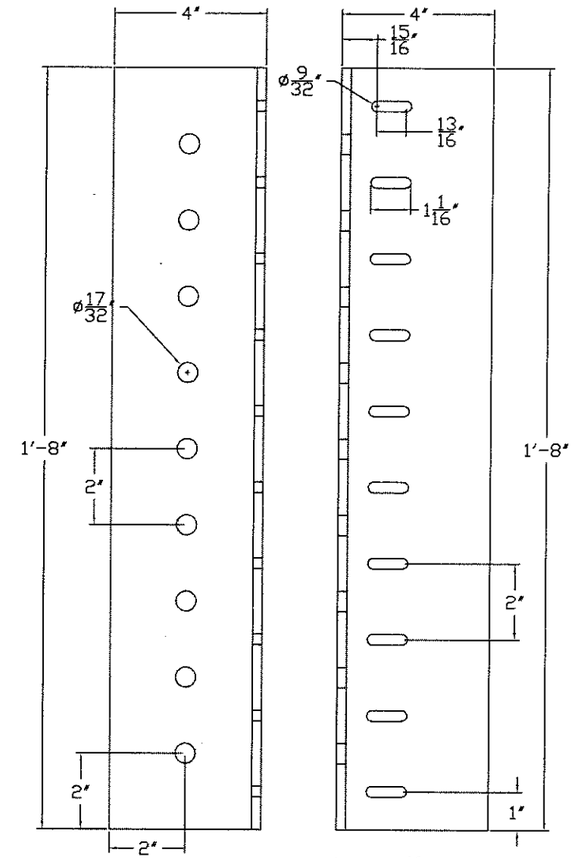

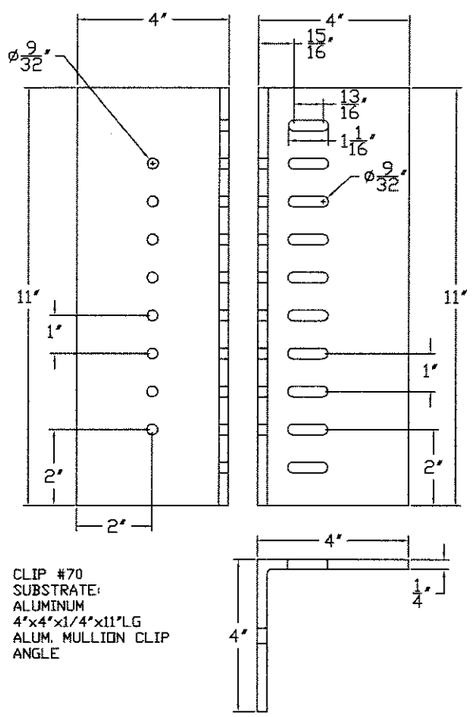

CLIP #70
SUBSTRATE:
ALUMINUM
4"x4"x1/4"x11"LG
ALUM. MULLION CLIP
ANGLE

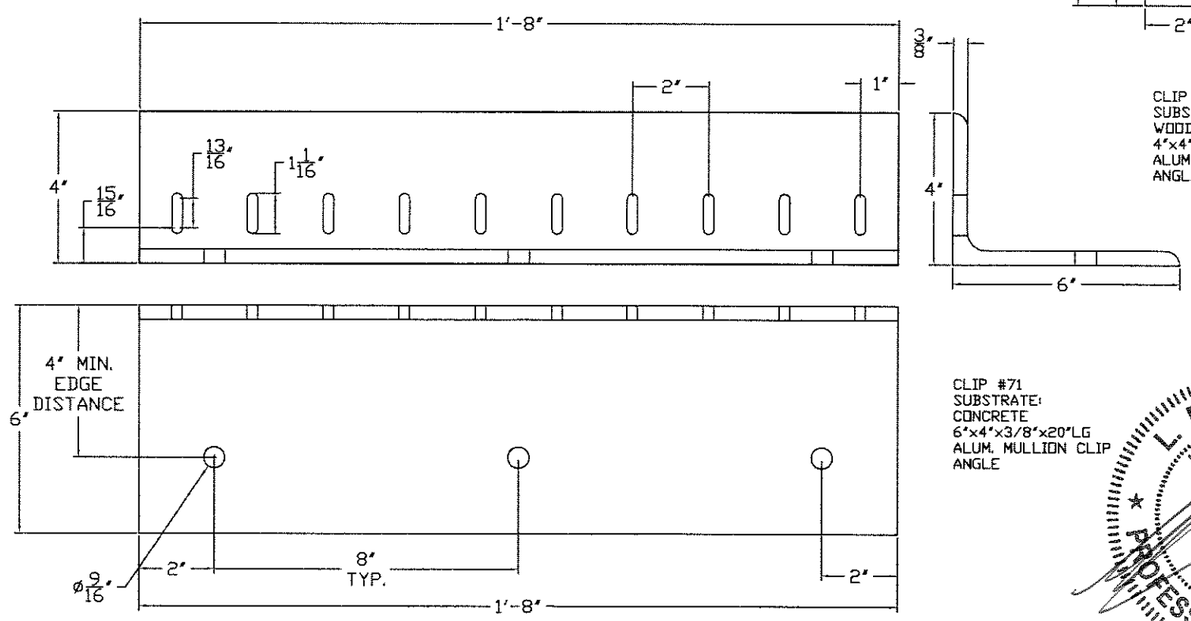

CLIP #69
SUBSTRATE:
WOOD
4"x4"x1/4"x20"LG
ALUM. MULLION CLIP
ANGLE

CLIP #71
SUBSTRATE:
CONCRETE
6"x4"x3/8"x20"LG
ALUM. MULLION CLIP
ANGLE

Approved as complying with the
Florida Building Code
Date 07/28/2016
NOA# 16-0222.04
Miami Dade Product Control
By

L. DAVID RICE
LICENSED
No. 50923
STATE OF
FLORIDA
PROFESSIONAL ENGINEER

MAY 23 2016

RICE
ENGINEERING
105 School Creek Trail
Luxemburg, WI 54217
Phone: (920) 617-1042
Fax: (920) 617-1100
www.rice-inc.com

Florida Firm No: F-01000005061
Certificate of Authorization: #9090
L. David Rice
Registration No: 50923

REVISION:
DATE: 11-20-15
SHEET: 13 OF 13
DRW NO : RD-1457

PROJECT: DC-9614 SUBMITTAL DRAWINGS
TITLE: CLIP ANGLES PART C
SCALE: 3" = 1'-0"
DRW BY: R. GEIST

Construction Specialties™
49 MEEKER AVENUE, CRANFORD, NEW JERSEY
PHONE: 1-800-631-7379 / FAX: 908-272-5844