MIAMI-DADE COUNTY
DEPARTMENT OF REGULATORY AND ECONOMIC RESOURCES (RER)
BOARD AND CODE ADMINISTRATION DIVISION

MIAMI–DADE COUNTY
PRODUCT CONTROL SECTION
11805 SW 26 Street, Room 208
T (786) 315–2590 F (786) 315–2599
www.miamidade.gov/economy

NOTICE OF ACCEPTANCE (NOA)

Perspective Glass Company, Inc.
750 Southwest 14th Avenue
Pompano Beach, FL 33069

SCOPE:

This NOA is being issued under the applicable rules and regulations governing the use of construction materials. The documentation submitted has been reviewed and accepted by Miami–Dade County RER–Product Control Section to be used in Miami–Dade County and other areas where allowed by the Authority Having Jurisdiction (AHJ).

This NOA shall not be valid after the expiration date stated below. The Miami–Dade County Product Control Section (In Miami–Dade County) and/ or the AHJ (in areas other than Miami–Dade County) reserve the right to have this product or material tested for quality assurance purposes. If this product or material fails to perform in the accepted manner, the manufacturer will incur the expense of such testing and the AHJ may immediately revoke, modify, or suspend the use of such product or material within their jurisdiction. RER reserves the right to revoke this acceptance, if it is determined by Miami–Dade County Product Control Section that this product or material fails to meet the requirements of the applicable building code.

This product is approved as described herein, and has been designed to comply with the Florida Building Code, including the High Velocity Hurricane Zone.

DESCRIPTION: Series "CGC-6000" Aluminum Storefront System – L.M.I.

APPROVAL DOCUMENT: Drawing No. **6000-LMI**, titled "CGC-6000 Large Missile Impact Resistant System", sheets 1 through 12 of 12, dated 10/03/05, with the latest revision dated 05/19/16, prepared by manufacturer, signed and sealed by Scott Wolters, P. E., bearing the Miami–Dade County Product Control Revision stamp with the Notice of Acceptance number and Expiration date by the Miami–Dade County Product Control Section.

MISSILE IMPACT RATING: Large and Small Missile Impact Resistant

LABELING: Each unit shall bear a permanent label with the manufacturer's name or logo, city, state, series, and following statement: "Miami–Dade County Product Control Approved", unless otherwise noted herein.

RENEWAL of this NOA shall be considered after a renewal application has been filed and there has been no change in the applicable building code negatively affecting the performance of this product.

TERMINATION of this NOA will occur after the expiration date or if there has been a revision or change in the materials, use, and/ or manufacture of the product or process. Misuse of this NOA as an endorsement of any product, for sales, advertising or any other purposes shall automatically terminate this NOA. Failure to comply with any section of this NOA shall be cause for termination and removal of NOA.

ADVERTISEMENT: The NOA number preceded by the words Miami–Dade County, Florida, and followed by the expiration date may be displayed in advertising literature. If any portion of the NOA is displayed, then it shall be done in its entirety.

INSPECTION: A copy of this entire NOA shall be provided to the user by the manufacturer or its distributors and shall be available for inspection at the job site at the request of the Building Official.

This NOA **revises NOA No. 11–1103.05** and consists of this page 1 and evidence pages E–1, E–2, E–3 and E–4, as well as approval document mentioned above.

The submitted documentation was reviewed by **Jorge M. Plasencia, P. E.**

MIAMI-DADE COUNTY APPROVED

5/24/16

Perspective Glass Company, Inc.

NOTICE OF ACCEPTANCE: EVIDENCE SUBMITTED

A. DRAWINGS

1. Manufacturer's die drawings and sections.
   (Submitted under NOA No. 05–1013.06)
2. Drawing No. **6000-SMI**, titled "CGC-6000 Small Missile Impact Resistant System", sheets 1 through 12 of 12, dated 10/5/05, with the latest revision dated 05/19/16, prepared by manufacturer, signed and sealed by Scott Wolters, P.E.

B. TESTS

1. Test reports on: 1) Uniform Static Air Pressure Test, Loading per FBC TAS 202-94 along with marked-up drawings and installation diagram of aluminum unitized ribbon window system, prepared by Hurricane Test Laboratory, LLC, Test Report No. **HTL-0127-0125-04** *#1 (ELEVATION A/2)*, dated 1/22-2/05, signed and sealed by Vinu J. Abraham, P.E.
   (Submitted under NOA No. 05-1013.06)
2. Test reports on: 1) Uniform Static Air Pressure Test, Loading per FBC TAS 202-94
   2) Large Missile Impact Test per FBC, TAS 201-94
   3) Cyclic Wind Pressure Loading per FBC, TAS 203-94
   along with marked-up drawings and installation diagram of aluminum unitized ribbon window system, prepared by Hurricane Test Laboratory, LLC, Test Reports No. **HTL-0127-1114-02** #1 and **HTL-0127-0602-03** #5 (ELEVATION B/3), dated 11/15-18/02 – 1/7/04, signed and sealed by Vinu J. Abraham, P.E.
   (Submitted under NOA No.05-1013.06)
3. Test reports on: 1) Air Infiltration Test, per FBC, TAS 202–94
   2) Uniform Static Air Pressure Test, Loading per FBC TAS 202–94
   3) Water Resistance Test, per FBC, TAS 202–94
   4) Large Missile Impact Test per FBC, TAS 201–94
   5) Small Missile Impact Test per FBC, TAS 201–94
   6) Cyclic Wind Pressure Loading per FBC, TAS 203–94
   along with marked–up drawings and installation diagram of aluminum unitized window system, prepared by Hurricane Test Laboratory, LLC, Test Reports No. **HTL-0127-0410-03** #1; **HTL-0127-0816-03** #1 and **HTL-0127-1005-04** #2 (ELEVATION C1/4), dated 4/10/03-08/19/03-10/4/04, signed and sealed by Vinu J. Abraham, P.E.
   (Submitted under NOA No. 05-1013.06)

Jorge M. Plasencia, P. E.
Product Control Unit Supervisor
NOA No. 16–0224.01
Expiration Date: March 30, 2017
Approval Date: May 26, 2016

B. TESTS (CONTINUED)

4. Test reports on: 1) Large Missile Impact Test per FBC, TAS 201-94
2) Small Missile Impact Test per FBC, TAS 201-94
3) Cyclic Wind Pressure Loading per FBC, TAS 203-94
along with marked-up drawings and installation diagram of aluminum unitized window system, prepared by Hurricane Test Laboratory, LLC, Test Report No. **HTL-0127-0410-03** #3 (ELEVATION C2/5), dated 4/28/03, signed and sealed by Vinu J. Abraham, P.E.
(Submitted under NOA No. 05-1013.06)

5. Test reports on: 1) Large Missile Impact Test per FBC, TAS 201-94
2) Small Missile Impact Test per FBC, TAS 201-94
3) Cyclic Wind Pressure Loading per FBC, TAS 203-94
along with marked-up drawings and installation diagram of aluminum unitized window system, prepared by Hurricane Test Laboratory, LLC, Test Report No. **HTL-0127-0317-03** #1 (ELEVATION C3/6), dated 3/10-11/03, signed and sealed by Vinu J. Abraham, P.E.
(Submitted under NOA No. 05-1013.06)

6. Test reports on: 1) Uniform Static Air Pressure Test, Loading per FBC TAS 202-94
2) Large Missile Impact Test per FBC, TAS 201-94
3) Small Missile Impact Test per FBC, TAS 201-94
4) Cyclic Wind Pressure Loading per FBC, TAS 203-94
along with marked-up drawings and installation diagram of aluminum unitized window system, prepared by Hurricane Test Laboratory, LLC, Test Reports No. **HTL-0127-0602-03** #2 and **HTL-0127-1016-03** #2 (ELEVATION D/7), dated 4/10/03, signed and sealed by Vinu J. Abraham, P.E.
(Submitted under NOA No. 05-1013.06)

7. Test reports on: 1) Uniform Static Air Pressure Test, Loading per FBC TAS 202-94
2) Large Missile Impact Test per FBC, TAS 201-94
3) Cyclic Wind Pressure Loading per FBC, TAS 203-94
along with marked-up drawings and installation diagram of aluminum unitized window system, prepared by Hurricane Test Laboratory, LLC, Test Reports No. **HTL-0127-0602-03** #1 and **HTL-0127-1016-03** #2 (ELEVATION E/8), dated 6/11/03, signed and sealed by Vinu J. Abraham, P.E.
(Submitted under NOA No. 05-1013.06)

Jorge M. Plasencia, P. E.
Product Control Unit Supervisor
NOA No. 16–0224.01
Expiration Date: March 30, 2017
Approval Date: May 26, 2016

B. TESTS (CONTINUED)

8. Test reports on: 1) Uniform Static Air Pressure Test, Loading per FBC TAS 202-94
2) Large Missile Impact Test per FBC, TAS 201-94
3) Cyclic Wind Pressure Loading per FBC, TAS 203-94
along with marked-up drawings and installation diagram of aluminum unitized window system, prepared by Hurricane Test Laboratory, LLC, Test Reports No. **HTL-0127-0127-03** #1; **HTL-0127-0602-03** #1 and **HTL-0127-1009-03** #1 (ELEVATION F/9), dated 1/20-5/22/03 & 1/7/04, signed and sealed by Vinu J. Abraham, P.E.
(Submitted under NOA No. 05-1013.06)

9. Test reports on: 1) Air Infiltration Test, per FBC, TAS 202-94
2) Uniform Static Air Pressure Test, Loading per FBC TAS 202-94
3) Water Resistance Test, per FBC, TAS 202-94
4) Large Missile Impact Test per FBC, TAS 201-94
5) Cyclic Wind Pressure Loading per FBC, TAS 203-94
along with marked-up drawings and installation diagram of aluminum unitized window system, prepared by Hurricane Test Laboratory, LLC, Test Reports No. **HTL-0127-0410-03** #2 and **HTL-0127-0219-04** #1 (ELEVATION H/10), dated 4/24/03-5/6/04, signed and sealed by Vinu J. Abraham, P.E.
(Submitted under NOA No. 05-1013.06)

10. Test reports on: 1) Air Infiltration Test, per FBC, TAS 202-94
2) Uniform Static Air Pressure Test, Loading per FBC TAS 202-94
3) Water Resistance Test, per FBC, TAS 202-94
4) Large Missile Impact Test per FBC, TAS 201-94
5) Cyclic Wind Pressure Loading per FBC, TAS 203-94
along with marked-up drawings and installation diagram of aluminum unitized window system, prepared by Hurricane Test Laboratory, LLC, Test Report No. **HTL-0127-0108-03** #1 (ELEV. H1/11), dated 1/6-13/03, signed and sealed by Vinu J. Abraham, P.E.
(Submitted under NOA No. 05-1013.06)

C. CALCULATIONS

1. Anchor verification calculations and structural analysis, conformance to, complying **FBC 5th Edition (2014)**, dated 04/27/16, signed and sealed by Scott Wolters, P.E.

2. Glazing complies with ASTM E1300–04/ 09

D. QUALITY ASSURANCE

1. Miami–Dade Department of Regulatory and Economic Resources (RER)

Jorge M. Plasencia, P. E.
Product Control Unit Supervisor
NOA No. 16–0224.01
Expiration Date: March 30, 2017
Approval Date: May 26, 2016

E. MATERIAL CERTIFICATIONS

1. Notice of Acceptance No. **14-0916.11** issued to **Kuraray America, Inc.** for their **"SentryGlas® (Clear and White) Glass Interlayers"** dated 06/25/15, expiring on 07/04/18.
2. Notice of Acceptance No. **14-0423.15** issued to **Eastman Chemical Company (MA)** for their **"Saflex CP – Saflex and Saflex HP Composite Glass Interlayers with PET Core"** dated 06/19/14, expiring on 12/11/18.
3. Notice of Acceptance No. **14-0423.16** issued to **Eastman Chemical Company (MA)** for their **"Saflex HP Clear or Color Glass Interlayers"** dated 06/19/14, expiring on 04/14/18.

F. STATEMENTS

1. Statement letter of no financial interest, conformance to, complying with **FBC 5th Edition (2014)**, and of no financial interest, dated 11/30/15, signed and sealed by Scott Wolters, P. E.
2. Asset purchase agreement dated 05/12/15, signed by Mr. Victor Prieto, V.P., Custom Glass Company, LLC and Mr. Shane Prieto, V.P., Perspective Glass Company, Inc.
3. Letter from owners of existing NOA stating that they have sold all assets to the applicant, that they no longer manufacture the product and relinquish their rights to the current NOA No. 11-1103.05, dated 11/23/15, signed by Mr. Shane Prieto, V.P., Perspective Glass Company, Inc.
4. Statement letter for Name Change Request dated 11/23/15, issued by Perspective Glass Company, Inc., signed by Shane Prieto, V.P.
5. Letter from manufacturer requesting a 1-year extension to allow time to perform verification test, dated 03/03/16, signed by Alan Rule.
6. Laboratory compliance letter for Test Reports No.'s **HTL-0127-0108-03, HTL-0127-0125-04, HTL-0127-0127-03, HTL-0127-0219-04, HTL-0127-0317-03, HTL-0127-0410-03, HTL-0127-0602-03, HTL-0127-0816-03, HTL-0127-1005-04, HTL-0127-1009-03, HTL-0127-1114-02** and **HTL-0127-1016-03**, issued by Hurricane Test Laboratory, LLC, dated March 14, 2005, all signed and sealed by Vinu J. Abraham, P. E. ***(Submitted under previous NOA No. 05-1013.06)***

G. OTHERS

1. Notice of Acceptance No. **11–1103.05**, issued to Custom Glass Company for their "Series 'CGC-6000' Aluminum Storefront System - L.M.I.", approved on 01/19/12 and expiring on 03/30/16.
2. One year approval, subjected to successful verification test.

Jorge M. Plasencia, P. E.
Product Control Unit Supervisor
NOA No. 16–0224.01
Expiration Date: March 30, 2017
Approval Date: May 26, 2016

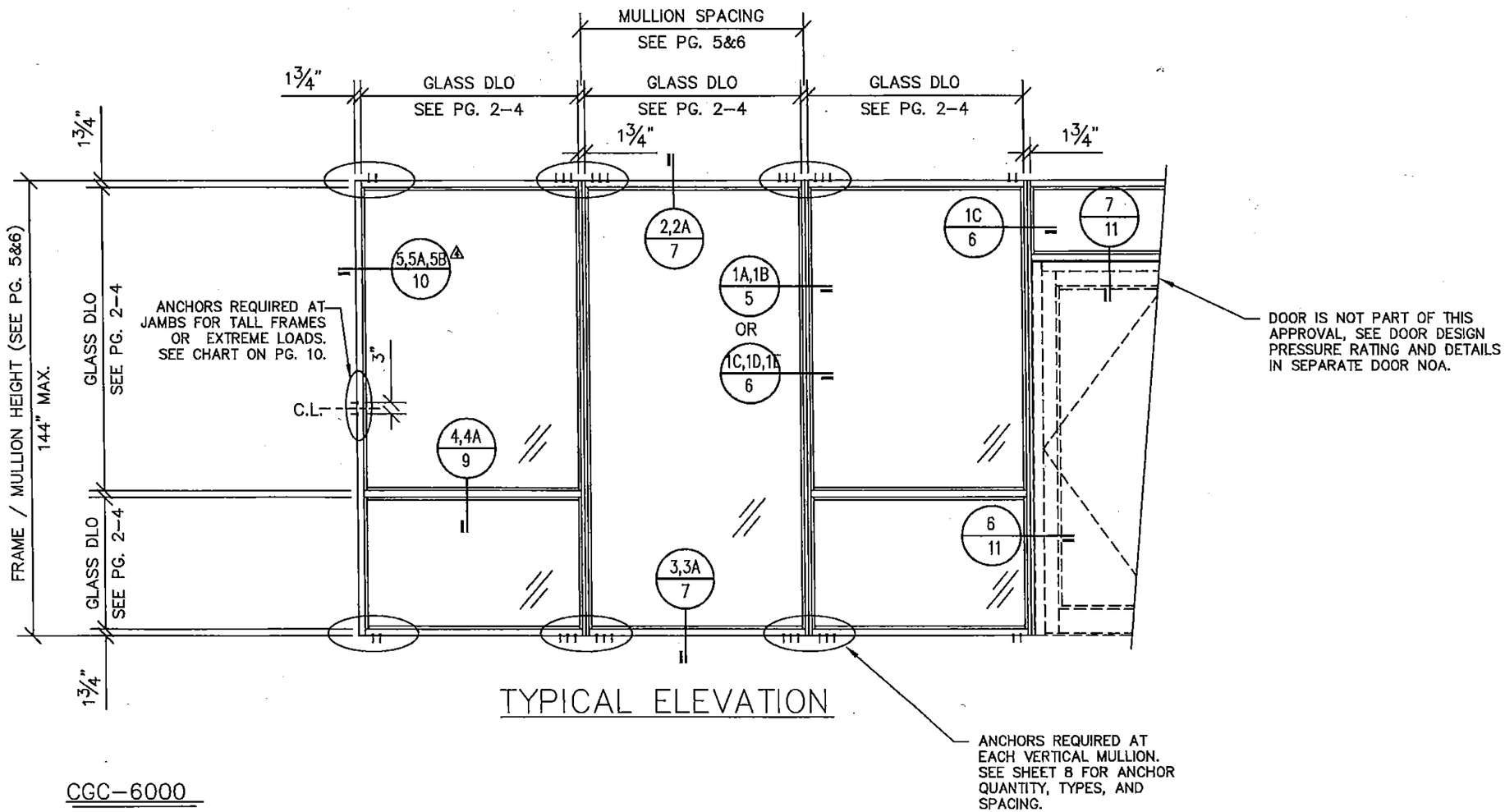

TYPICAL ELEVATION

CGC–6000

1 3/4 " x 6" STOREFRONT SYSTEM GLAZED FOR LARGE MISSILE IMPACT. (SHUTTERS NOT REQUIRED)

GLASS – SEE CHARTS ON PAGES 2 THRU 4 FOR ALLOWABLE GLASS TYPES, SIZES, AND DESIGN PRESSURES.

MULLIONS – SEE CHART ON PAGES 5 AND 6 FOR ALLOWABLE DESIGN PRESSURES FOR VARIOUS MULLION AND REINFORCEMENT CONFIGURATIONS.

ANCHORS – SEE CHARTS ON PAGES 8 AND 10 FOR ALLOWABLE ANCHORS.

SYSTEM – THE DESIGN PRESSURE OF THE ENTIRE SYSTEM IS THE LOWEST ALLOWABLE DESIGN PRESSURE OF THE THREE COMPONENTS ABOVE THAT MAKE UP THE SYSTEM.

DOORS – CGC 6000 IS DESIGNED TO ACCEPT MIAMI–DADE COUNTY APPROVED DOORS FROM OTHER MANUFACTURERS. PLEASE SEE DOOR APPROVAL FOR FASTENER REQUIREMENTS.

MATERIAL LEGEND – SEE PAGE 11.

NOTES:

1. THIS PRODUCT HAS BEEN DESIGNED AND TESTED TO COMPLY WITH ALL THE REQUIREMENTS OF THE 5TH EDITION (2014) FLORIDA BUILDING CODE, INCLUDING THE HVHZ PROVISIONS,
2. THIS SYSTEM HAS BEEN TESTED PER TAS 201, 202, & 203 FOR LARGE AND SMALL IMPACT RESISTANCE. SHUTTERS ARE NOT REQUIRED.
3. DESIGN LOADS MUST BE CALCULATED BY A PROFESSIONAL ENGINEER OR ARCHITECT FOR EACH PROJECT. THE DESIGN PRESSURE CANNOT EXCEED THE TESTED PRESSURE, LISTED ON SHEETS 2–10, FOR EACH COMPONENT OF THIS SYSTEM.
4. WOOD BUCKS BY OTHERS MUST BE ANCORED PROPERLY TO TRANSFER IMPOSED LOADS TO THE STRUCTURE.
5. ANCHORS SHALL BE AS LISTED AND SPACED AS SHOWN ON DETAILS. ANCHOR EMBEDMENT IN BASE MATERIAL SHALL BE BEYOND WALL DRESSING OR STUCCO.
6. CODE REQUIREMENTS FOR SAFE GAURDS MUST BE OBSERVED.
7. GLASS CHARTS ON PAGES 2–4 ARE BASED ON TEST PRESSURES AND ASTM E 1300–04.
8. MATERIALS INCLUDING BUT NOT LIMITED TO STEEL/METAL SCREWS, THAT COME INTO CONTACT WITH OTHER DISSIMILAR MATERIALS SHALL MEET THE REQUIREMENTS OF THE 2014 FLORIDA BUILDING CODE AND ADM–01–2010 SECTION M7.

PRODUCT REVISED
as complying with the Florida Building Code
NOA–No. 16–0224.01
Expiration Date 03/30/2017
By
Miami–Dade Product Control

ENGINEER:
SCOTT WOLTERS
FL PE# 62354
WOLTERS ENGINEERING
(COA# 27194)
15211 97TH ROAD
WEST PALM BEACH, FL 33412
STATE OF FLORIDA
No 62354
PROFESSIONAL ENGINEER
ph.(954) 773–9714 fax (954) 971–6814

REVISIONS:	
5	4/15/16
4	11/18/10
3	7/16/10

SCALE: N.T.S.
DRAWN BY: SW
DATE: 10/3/05

PGC
PERSPECTIVE GLASS COMPANY
Glazing Contractors

750 Southwest 14th Avenue Pompano Beach, Florida 33069

DRAWING TITLE: CGC–6000 LARGE MISSILE IMPACT RESISTANT SYSTEM
DWG. # 6000–LMI
PAGE TITLE:
PAGE NO. 1/12

D.L. OPNG (HEIGHT)	Glass Types A (1/4" Heat Strengthened - .090 Saflex IIIG PVB - 1/4" Heat Strengthened) D.L. OPENING (WIDTH) 36"	42"	48"	54"	60"	66"	72"	78"	84"	90"	96"	102"	108"	114"	120"
30"	+65,-70	+65,-70	+65,-70	+65,-70	+65,-70	+65,-70	+65,-70	+65,-70	+65,-70	+65,-70	+65,-70	+65,-70	+65,-70	+65,-70	+65,-70
36"	+65,-70	+65,-70	+65,-70	+65,-70	+65,-70	+65,-70	+65,-70	+65,-70	+65,-70	+65,-70	+65,-70	+65,-70	+65,-70	+65,-70	+65,-70
42"	+65,-70	+65,-70	+65,-70	+65,-70	+65,-70	+65,-70	+65,-70	+65,-70	+65,-70	+65,-70	+65,-70	+65,-70	+65,-70	---	---
48"	+65,-70	+65,-70	+65,-70	+65,-70	+65,-70	+65,-70	+65,-70	+65,-70	+65,-70	+65,-70	+65,-70	---	---	---	---
54"	+65,-70	+65,-70	+65,-70	+65,-70	+65,-70	+65,-70	+65,-70	+65,-70	+65,-70	---	---	---	---	---	---
60"	+65,-70	+65,-70	+65,-70	+65,-70	+65,-70	+65,-70	+65,-70	+65,-70	---	---	---	---	---	---	---
63"	+65,-70	+65,-70	+65,-70	+65,-70	+65,-70	+65,-70	+65,-70	---	---	---	---	---	---	---	---
66"	+65,-70	+65,-70	+65,-70	+65,-70	+65,-70	+65,-70	---	---	---	---	---	---	---	---	---
69"	+65,-70	+65,-70	+65,-70	+65,-70	+65,-70	+65,-70	---	---	---	---	---	---	---	---	---
72"	+65,-70	+65,-70	+65,-70	+65,-70	+65,-70	---	---	---	---	---	---	---	---	---	---
75"	+65,-70	+65,-70	+65,-70	+65,-70	+65,-70	---	---	---	---	---	---	---	---	---	---
78"	+65,-70	+65,-70	+65,-70	+65,-70	+65,-70	---	---	---	---	---	---	---	---	---	---
81"	+65,-70	+65,-70	+65,-70	+65,-70	---	---	---	---	---	---	---	---	---	---	---
84"	+65,-70	+65,-70	+65,-70	+65,-70	---	---	---	---	---	---	---	---	---	---	---
90"	+65,-70	+65,-70	+65,-70	---	---	---	---	---	---	---	---	---	---	---	---
96"	+65,-70	+65,-70	+65,-70	---	---	---	---	---	---	---	---	---	---	---	---
102"	+65,-70	+65,-70	---	---	---	---	---	---	---	---	---	---	---	---	---
108"	+65,-70	+65,-70	---	---	---	---	---	---	---	---	---	---	---	---	---
114"	+65,-70	---	---	---	---	---	---	---	---	---	---	---	---	---	---
120"	+65,-70	---	---	---	---	---	---	---	---	---	---	---	---	---	---
126"	+65,-70	---	---	---	---	---	---	---	---	---	---	---	---	---	---

D.L. OPNG (HEIGHT)	Glass Type B (1/4" Annealed - .090 Saflex IIIG PVB - 1/4" Annealed) D.L. OPENING (WIDTH) 36"	42"	48"	54"	60"	66"	72"	78"	84"	90"	96"	102"	108"	114"	120"
30"	+65,-70	+65,-70	+65,-70	+65,-70	+65,-70	+65,-70	+65,-70	+65,-70	+65,-70	+65,-70	+65,-70	+65,-70	+65,-70	+65,-70	+65,-70
36"	+65,-70	+65,-70	+65,-70	+65,-70	+65,-70	+65,-70	+65,-70	+65,-70	+65,-70	+65,-70	+65,-70	+65,-70	+65,-70	+65,-70	+65,-70
42"	+65,-70	+65,-70	+65,-70	+65,-70	+65,-70	+65,-70	+65,-70	+65,-70	+65,-70	+65,-70	+65,-70	+65,-70	+65,-70	---	---
48"	+65,-70	+65,-70	+65,-70	+65,-70	+65,-70	+65,-70	+65,-70	+65,-70	+65,-70	+65,-70	+65,-70	---	---	---	---
54"	+65,-70	+65,-70	+65,-70	+65,-70	+65,-70	+65,-70	+65,-70	+65,-70	+65,-70	---	---	---	---	---	---
60"	+65,-70	+65,-70	+65,-70	+65,-70	+65,-70	+65,-70	+65,-70	+65,-70	---	---	---	---	---	---	---
63"	+65,-70	+65,-70	+65,-70	+65,-70	+65,-70	+65,-70	+65,-70	---	---	---	---	---	---	---	---
66"	+65,-70	+65,-70	+65,-70	+65,-70	+65,-70	+65,-70	---	---	---	---	---	---	---	---	---
69"	+65,-70	+65,-70	+65,-70	+65,-70	+65,-70	+65,-70	---	---	---	---	---	---	---	---	---
72"	+65,-70	+65,-70	+65,-70	+65,-70	+65,-70	---	---	---	---	---	---	---	---	---	---
75"	+65,-70	+65,-70	+65,-70	+65,-70	+65,-70	---	---	---	---	---	---	---	---	---	---
78"	+65,-70	+65,-70	+65,-70	+65,-70	+65,-70	---	---	---	---	---	---	---	---	---	---
81"	+65,-70	+65,-70	+65,-70	+65,-70	---	---	---	---	---	---	---	---	---	---	---
84"	+65,-70	+65,-70	+65,-70	+65,-70	---	---	---	---	---	---	---	---	---	---	---
90"	+65,-70	+65,-70	+65,-70	---	---	---	---	---	---	---	---	---	---	---	---
96"	+65,-70	+65,-70	+65,-70	---	---	---	---	---	---	---	---	---	---	---	---
102"	+65,-70	+65,-70	---	---	---	---	---	---	---	---	---	---	---	---	---
108"	+65,-70	+65,-70	---	---	---	---	---	---	---	---	---	---	---	---	---
114"	+65,-70	---	---	---	---	---	---	---	---	---	---	---	---	---	---
120"	+65,-70	---	---	---	---	---	---	---	---	---	---	---	---	---	---
126"	+65,-70	---	---	---	---	---	---	---	---	---	---	---	---	---	---

D.L. OPNG (HEIGHT)	Glass Type C (1/4" Annealed - .090 SentryGlas Plus - 1/4" Annealed) D.L. OPENING (WIDTH) 36"	42"	48"	54"	60"	66"	72"	78"	84"	90"	96"	102"	108"	114"	120"
30"	+75,-80	+75,-80	+75,-80	+75,-80	+75,-80	+75,-80	+75,-80	+75,-80	+75,-80	+75,-80	+75,-80	+75,-80	+75,-80	+75,-80	+75,-80
36"	+75,-80	+75,-80	+75,-80	+75,-80	+75,-80	+75,-80	+75,-80	+75,-80	+75,-80	+75,-80	+75,-80	+75,-80	+75,-80	+75,-80	+75,-80
42"	+75,-80	+75,-80	+75,-80	+75,-80	+75,-80	+75,-80	+75,-80	+75,-80	+75,-80	+75,-80	+75,-79.9	+75,-76.6	+73.6,-73.6	+70.7,-70.7	+68.7,-68.7
48"	+75,-80	+75,-80	+75,-80	+75,-80	+75,-80	+75,-80	+75,-80	+75,-80	+75,-79.3	+74.9,-74.9	+71,-71	+67.1,-67.1	---	---	---
54"	+75,-80	+75,-80	+75,-80	+75,-80	+75,-80	+75,-80	+75,-80	+75,-77.5	+73.5,-73.3	+68.4,-68.4	---	---	---	---	---
60"	+75,-80	+75,-80	+75,-80	+75,-80	+75,-80	+75,-80	+75,-77.3	+72.5,-72.5	+68,-68	---	---	---	---	---	---
63"	+75,-80	+75,-80	+75,-80	+75,-80	+75,-80	+75,-80	+75,-75.2	+70.3,-70.3	---	---	---	---	---	---	---
66"	+75,-80	+75,-80	+75,-80	+75,-80	+75,-80	+75,-78.7	+73.3,-73.3	+68.2,-68.2	---	---	---	---	---	---	---
69"	+75,-80	+75,-80	+75,-80	+75,-80	+75,-80	+75,-76.3	+71.5,-71.5	---	---	---	---	---	---	---	---
72"	+75,-80	+75,-80	+75,-80	+75,-80	+75,-77.3	+73.3,-73.3	---	---	---	---	---	---	---	---	---
75"	+75,-80	+75,-80	+75,-80	+75,-79.9	+75,-75.2	+71,-71	---	---	---	---	---	---	---	---	---
78"	+75,-80	+75,-80	+75,-80	+75,-77.5	+72.5,-72.5	+68.2,-68.2	---	---	---	---	---	---	---	---	---
81"	+75,-80	+75,-80	+75,-80	+75,-75.2	+70,-70	---	---	---	---	---	---	---	---	---	---
84"	+75,-80	+75,-80	+75,-79.3	+73.5,-73.3	+68,-68	---	---	---	---	---	---	---	---	---	---
90"	+75,-80	+75,-80	+74.9,-74.9	+68.4,-68.4	---	---	---	---	---	---	---	---	---	---	---
96"	+75,-80	+75,-79.9	+71,-71	---	---	---	---	---	---	---	---	---	---	---	---
102"	+75,-80	+75,-76.6	+67.1,-67.1	---	---	---	---	---	---	---	---	---	---	---	---
108"	+75,-80	+73.6,-73.6	---	---	---	---	---	---	---	---	---	---	---	---	---
114"	+75,-80	+70.7,-70.7	---	---	---	---	---	---	---	---	---	---	---	---	---
120"	+75,-80	+68.7,-68.7	---	---	---	---	---	---	---	---	---	---	---	---	---
126"	+75,-80	---	---	---	---	---	---	---	---	---	---	---	---	---	---

POSITIVE AND NEGATIVE PRESSURES ON GLASS CHARTS ARE BASED ON TESTED PRESSURE AND ASTM E 1300-04.

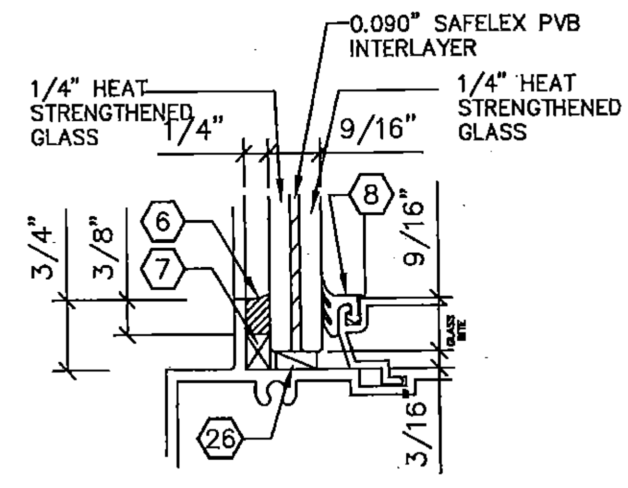

GLASS TYPE "A"

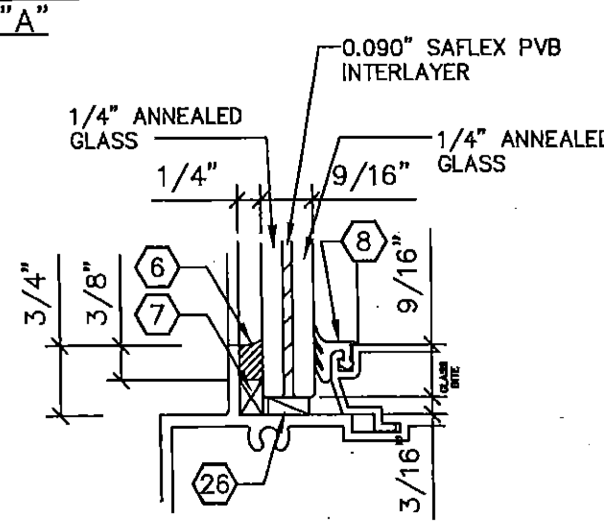

GLASS TYPE "B"

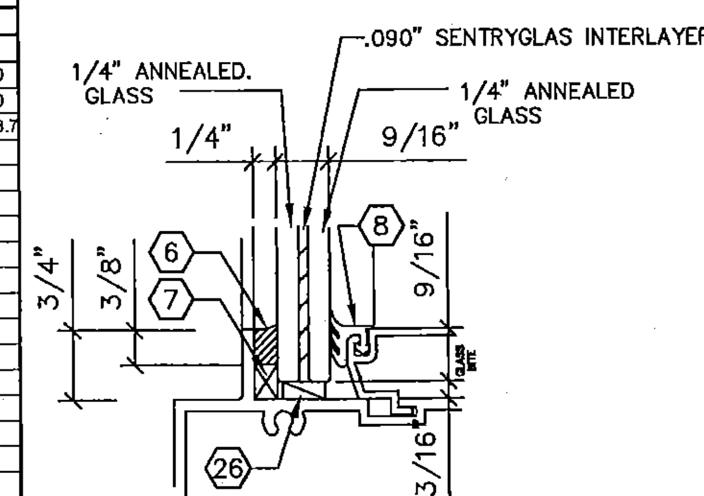

GLASS TYPE "C"

PRODUCT REVISED
as complying with the Florida Building Code
NOA-No. 16-0224.01
Expiration Date 03/30/2017
By
Miami-Dade Product Control

ENGINEER:
SCOTT WOLTERS
FL PE# 62354
WOLTERS ENGINEERING
(COA# 27144)
15211 97TH ROAD N
WEST PALM BEACH, FL 33412

REVISIONS:
5 10/21/15
4 11/18/10
3 7/16/10

SCALE: N.T.S.
DRAWN BY: SW
DATE: 10/3/05

PGC
PERSPECTIVE GLASS COMPANY
Glazing Contractors

DRAWING TITLE: CGC-6000 LARGE MISSILE IMPACT RESISTANT SYSTEM
DWG. # 6000-LMI
PAGE TITLE:
PAGE NO. 2/12

750 Southwest 14th Avenue Pompano Beach, Florida 33069 ph.(954) 773-9714 fax (954)

Glass Types D (1/4" Heat Strengthened - .090 SentryGlas Plus - 1/4" Heat Strengthened)

D.L. OPNG (HEIGHT)	D.L. OPENING (WIDTH)														
	36"	42"	48"	54"	60"	66"	72"	78"	84"	90"	96"	102"	108"	114"	120"
30"	+90,-105	+90,-105	+90,-105	+90,-105	+90,-105	+90,-105	+90,-105	+90,-105	+90,-105	+90,-105	+90,-105	+90,-105	+90,-105	+90,-105	+90,-105
36"	+90,-105	+90,-105	+90,-105	+90,-105	+90,-105	+90,-105	+90,-105	+90,-105	+90,-105	+90,-105	+90,-105	+90,-105	+90,-105	+90,-105	+90,-105
42"	+90,-105	+90,-105	+90,-105	+90,-105	+90,-105	+90,-105	+90,-105	+90,-105	+90,-105	+90,-105	+90,-105	+90,-105	+90,-105	+90,-105	+90,-105
48"	+90,-105	+90,-105	+90,-105	+90,-105	+90,-105	+90,-105	+90,-105	+90,-105	+90,-105	+90,-105	+90,-105	+90,-105	+90,-105	---	---
54"	+90,-105	+90,-105	+90,-105	+90,-105	+90,-105	+90,-105	+90,-105	+90,-105	+90,-105	+90,-105	+90,-105	---	---	---	---
60"	+90,-105	+90,-105	+90,-105	+90,-105	+90,-105	+90,-105	+90,-105	+90,-105	+90,-105	—	---	---	---	---	---
63"	+90,-105	+90,-105	+90,-105	+90,-105	+90,-106	+90,-105	+90,-105	+90,-105	+90,-105	---	---	---	---	---	---
66"	+90,-105	+90,-105	+90,-105	+90,-105	+90,-105	+90,-105	+90,-105	+90,-105	---	---	---	---	---	---	---
69"	+90,-105	+90,-105	+90,-105	+90,-105	+90,-105	+90,-105	+90,-105	---	---	---	---	---	---	---	---
72"	+90,-105	+90,-105	+90,-105	+90,-105	+90,-105	+90,-105	+90,-105	---	---	---	---	---	---	---	---
75"	+90,-105	+90,-105	+90,-105	+90,-105	+90,-105	+90,-105	---	---	---	---	---	---	---	---	---
78"	+90,-105	+90,-105	+90,-105	+90,-105	+90,-105	+90,-105	---	---	—	---	---	---	---	---	---
81"	+90,-105	+90,-105	+90,-105	+90,-105	+90,-106	+90,-105	---	---	---	---	---	---	---	---	---
84"	+90,-105	+90,-105	+90,-105	+90,-105	+90,-105	---	---	---	---	---	---	---	---	---	---
90"	+90,-105	+90,-105	+90,-105	+90,-106	---	---	---	---	---	---	---	---	---	---	---
96"	+90,-105	+90,-105	+90,-105	+90,-105	---	---	---	---	---	---	---	---	---	---	---
102"	+90,-105	+90,-105	+90,-105	---	---	---	---	---	---	---	---	---	---	---	---
108"	+90,-105	+90,-105	+90,-105	---	---	---	---	---	---	---	---	---	---	---	---
114"	+90,-105	+90,-105	---	---	---	---	---	---	---	---	---	---	---	---	---
120"	+90,-105	+90,-105	---	---	---	---	---	---	---	---	---	---	---	---	---
126"	+90,-106	+90,-105	---	---	---	---	---	---	---	---	---	---	---	---	---

Glass Type E (1/4" Heat Strengthened - .075 StormGlass - 1/4" Heat Strengthened)

D.L. OPNG (HEIGHT)	D.L. OPENING (WIDTH)														
	36"	42"	48"	54"	60"	66"	72"	78"	84"	90"	96"	102"	108"	114"	120"
30"	+90,-105	+90,-105	+90,-105	+90,-105	+90,-105	+90,-105	+90,-105	+90,-105	+90,-105	+90,-105	+90,-105	+90,-105	+90,-105	+90,-105	+90,-105
36"	+90,-105	+90,-105	+90,-105	+90,-105	+90,-105	+90,-105	+90,-105	+90,-105	+90,-105	+90,-105	+90,-105	+90,-105	+90,-105	+90,-105	+90,-105
42"	+90,-105	+90,-105	+90,-105	+90,-105	+90,-105	+90,-105	+90,-105	+90,-105	+90,-105	+90,-105	+90,-105	+90,-105	+90,-105	+90,-105	+90,-105
48"	+90,-105	+90,-105	+90,-105	+90,-105	+90,-105	+90,-105	+90,-105	+90,-105	+90,-105	+90,-105	+90,-105	+90,-105	+90,-105	---	---
54"	+90,-105	+90,-105	+90,-105	+90,-105	+90,-105	+90,-105	+90,-105	+90,-105	+90,-105	+90,-105	+90,-105	—	---	---	---
60"	+90,-105	+90,-105	+90,-105	+90,-105	+90,-105	+90,-105	+90,-105	+90,-105	+90,-105	---	---	---	---	---	---
63"	+90,-105	+90,-105	+90,-105	+90,-105	+90,-105	+90,-105	+90,-105	+90,-105	+90,-105	—	---	---	---	---	---
66"	+90,-105	+90,-105	+90,-105	+90,-105	+90,-105	+90,-105	+90,-105	+90,-105	—	---	---	---	---	---	---
69"	+90,-105	+90,-105	+90,-105	+90,-105	+90,-105	+90,-105	+90,-105	—	---	---	---	---	---	---	---
72"	+90,-105	+90,-105	+90,-105	+90,-105	+90,-105	+90,-105	+90,-105	---	---	---	---	---	---	---	---
75"	+90,-105	+90,-105	+90,-105	+90,-105	+90,-105	+90,-105	---	---	---	---	---	---	---	---	---
78"	+90,-105	+90,-105	+90,-105	+90,-105	+90,-105	+90,-105	---	---	—	---	---	---	---	---	---
81"	+90,-105	+90,-105	+90,-105	+90,-105	+90,-106	+90,-105	---	---	---	---	---	---	---	---	---
84"	+90,-105	+90,-105	+90,-105	+90,-105	+90,-105	---	---	---	---	---	---	---	---	---	---
90"	+90,-105	+90,-105	+90,-105	+90,-106	---	---	---	---	---	---	---	---	---	---	---
96"	+90,-105	+90,-105	+90,-105	+90,-105	---	---	---	---	---	---	---	---	---	---	---
102"	+90,-105	+90,-105	+90,-105	---	---	---	---	---	---	---	---	---	---	---	---
108"	+90,-105	+90,-105	+90,-105	---	---	---	---	---	---	---	---	---	---	---	---
114"	+90,-105	+90,-105	---	---	---	---	---	---	---	---	---	---	---	---	---
120"	+90,-105	+90,-105	---	---	---	---	---	---	---	---	---	---	---	---	---
126"	+90,-106	+90,-105	---	---	---	---	---	---	---	---	---	---	---	---	---

POSITIVE AND NEGATIVE PRESSURES ON GLASS CHARTS ARE BASED ON TESTED PRESSURE AND ASTM E 1300-04.

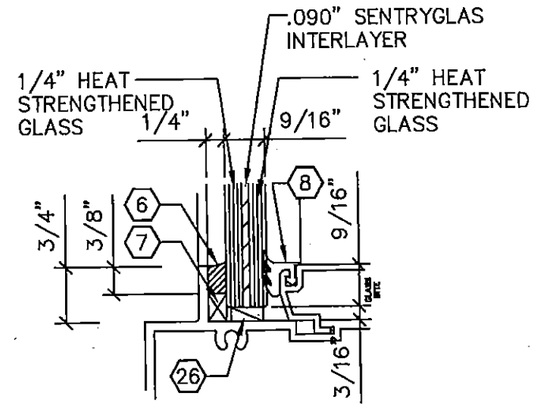

GLASS TYPE "D"

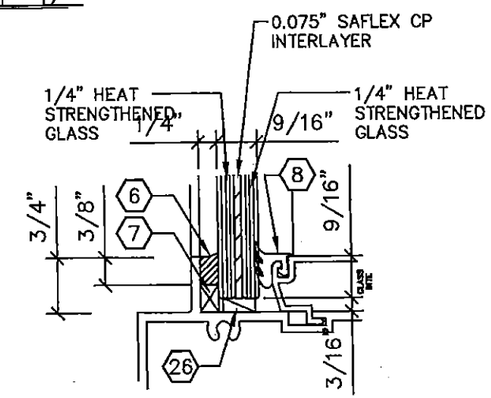

GLASS TYPE "E"

PRODUCT REVISED
as complying with the Florida Building Code
NOA-No. 16-0224.01
Expiration Date 03/30/2017
By
Miami-Dade Product Control

ENGINEER:
SCOTT WOLTERS
FL PE# 62354
WOLTERS ENGINEERING
(COA# 27152)
15211 97TH ROAD
WEST PALM BEACH, FL 33412
STATE OF FLORIDA
SCOTT WOLTERS
No 62354
PROFESSIONAL ENGINEER

REVISIONS:
5 10/21/15
4 11/18/10
3 7/16/10

SCALE: N.T.S.
DRAWN BY: SW
DATE: 10/3/05

PGC
PERSPECTIVE GLASS COMPANY
Glazing Contractors

DRAWING TITLE: CGC-6000 LARGE MISSILE IMPACT RESISTANT SYSTEM
DWG. # 6000-LMI
PAGE TITLE:
PAGE NO. 3/12

750 Southwest 14th Avenue Pompano Beach, Florida 33069 ph.(954) 773-9714 fax (954) 971-0614

Glass Type H (1/4" Heat Strengthened - .100 Saflex HP - 1/4" Heat Strengthened)															
D.L. OPNG (HEIGHT)	D.L. OPENING (WIDTH)														
	36"	42"	48"	54"	60"	66"	72"	78"	84"	90"	96"	102"	108"	114"	120"
30"	+90,-105	+90,-105	+90,-105	+90,-105	+90,-105	+90,-105	+90,-105	+90,-105	+90,-105	+90,-105	+90,-105	+90,-105	+90,-105	+90,-105	+90,-105
36"	+90,-105	+90,-105	+90,-105	+90,-105	+90,-105	+90,-105	+90,-105	+90,-105	+90,-105	+90,-105	+90,-105	+90,-105	+90,-105	+90,-105	+90,-105
42"	+90,-105	+90,-105	+90,-105	+90,-105	+90,-105	+90,-105	+90,-105	+90,-105	+90,-105	+90,-105	+90,-105	+90,-105	+90,-105	+90,-105	+90,-105
48"	+90,-105	+90,-105	+90,-105	+90,-105	+90,-105	+90,-105	+90,-105	+90,-105	+90,-105	+90,-105	+90,-105	+90,-105	+90,-105	---	---
54"	+90,-105	+90,-105	+90,-105	+90,-105	+90,-105	+90,-105	+90,-105	+90,-105	+90,-105	+90,-105	+90,-105	---	---	---	---
60"	+90,-105	+90,-105	+90,-105	+90,-105	+90,-105	+90,-105	+90,-105	+90,-105	+90,-105	---	---	---	---	---	---
63"	+90,-105	+90,-105	+90,-105	+90,-105	+90,-105	+90,-105	+90,-105	+90,-105	+90,-105	---	---	---	---	---	---
66"	+90,-105	+90,-105	+90,-105	+90,-105	+90,-105	+90,-105	+90,-105	+90,-105	---	---	---	---	---	---	---
69"	+90,-105	+90,-105	+90,-105	+90,-105	+90,-105	+90,-105	+90,-105	---	---	---	---	---	---	---	---
72"	+90,-105	+90,-105	+90,-105	+90,-105	+90,-105	+90,-105	+90,-105	---	---	---	---	---	---	---	---
75"	+90,-105	+90,-105	+90,-105	+90,-105	+90,-105	+90,-105	---	---	---	---	---	---	---	---	---
78"	+90,-105	+90,-105	+90,-105	+90,-105	+90,-105	+90,-105	---	---	---	---	---	---	---	---	---
81"	+90,-105	+90,-105	+90,-105	+90,-105	+90,-106	+90,-105	---	---	---	---	---	---	---	---	---
84"	+90,-105	+90,-105	+90,-105	+90,-105	+90,-105	---	---	---	---	---	---	---	---	---	---
90"	+90,-105	+90,-105	+90,-105	+90,-106	---	---	---	---	---	---	---	---	---	---	---
96"	+90,-105	+90,-105	+90,-105	+90,-105	---	---	---	---	---	---	---	---	---	---	---
102"	+90,-105	+90,-105	+90,-105	---	---	---	---	---	---	---	---	---	---	---	---
108"	+90,-105	+90,-105	+90,-105	---	---	---	---	---	---	---	---	---	---	---	---
114"	+90,-105	+90,-105	---	---	---	---	---	---	---	---	---	---	---	---	---
120"	+90,-105	+90,-105	---	---	---	---	---	---	---	---	---	---	---	---	---
126"	+90,-106	+90,-105	---	---	---	---	---	---	---	---	---	---	---	---	---

POSITIVE AND NEGATIVE PRESSURES ON GLASS CHARTS ARE BASED ON TESTED PRESSURE AND ASTM E 1300-04.

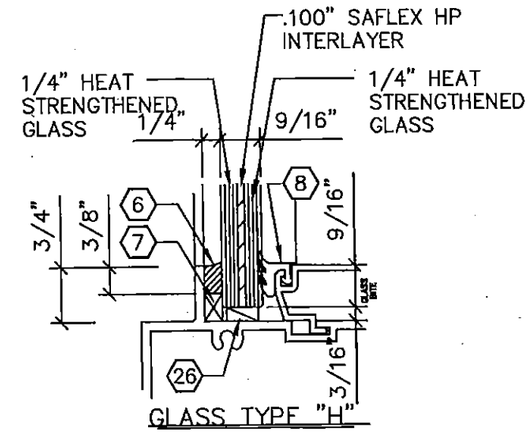

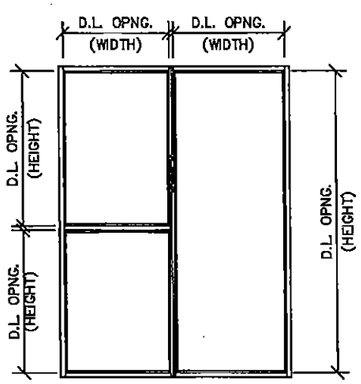

GLASS CHARTS

PRODUCT REVISED
as complying with the Florida Building Code
NOA-No. 16-0224.01
Expiration Date 03/30/2017
By
Miami-Dade Product Control

ENGINEER:
SCOTT WOLTERS
FL PE# 62355
WOLTERS ENGINEERING
(COA# 27194)
15211 97TH ROAD
WEST PALM BEACH, FL 33412

SCOTT WOLTERS ★ STATE OF FLORIDA ★ PROFESSIONAL ENGINEER

REVISIONS:	
5	10/21/15
4	11/18/10
3	7/16/10

SCALE: N.T.S.
DRAWN BY: SW
DATE: 10/3/05

PGC
PERSPECTIVE GLASS COMPANY
Glazing Contractors

DRAWING TITLE: CGC-6000 LARGE MISSILE IMPACT RESISTANT SYSTEM
DWG. # 6000-LMI
PAGE TITLE:
PAGE NO. 4/12

750 Southwest 14th Avenue Pompano Beach, Florida 33069 ph.(954) 773-9714 fax (954) 971-6614

MULLION PROPERTIES		
PART	Ixx (in^4)	Sxx (in^3)
CGL 6000	7.542	2.387
CGL 6001	7.046	2.226
3/16"x 4" STEEL	2.90 (AL)	0.5
1/4"x 4" STEEL	3.867 (AL)	0.667
1/2"x 4" STEEL	7.733 (AL)	1.333
3/8"x 5" STEEL	11.328 (AL)	1.562

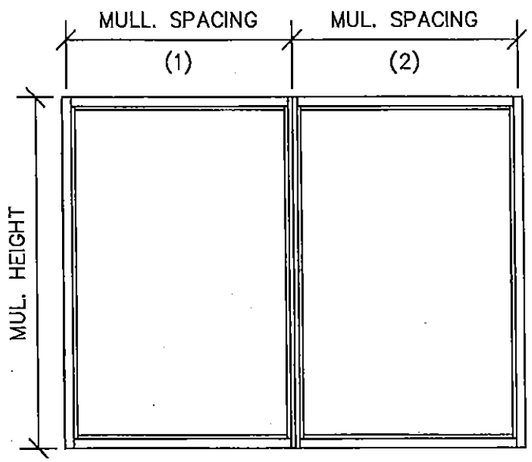

$$\text{WIDTH} = \frac{\text{MUL. SPACE(1)} + \text{MUL. SPACE(2)}}{2}$$

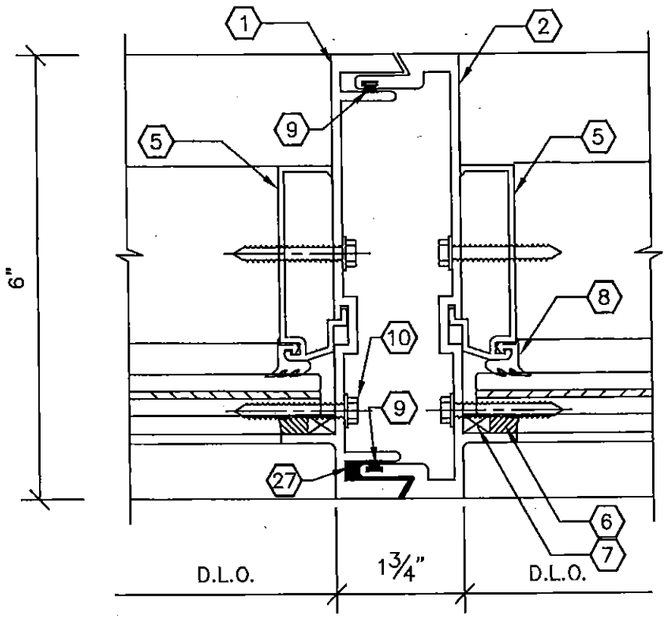

1A / 5 MULLION DETAIL

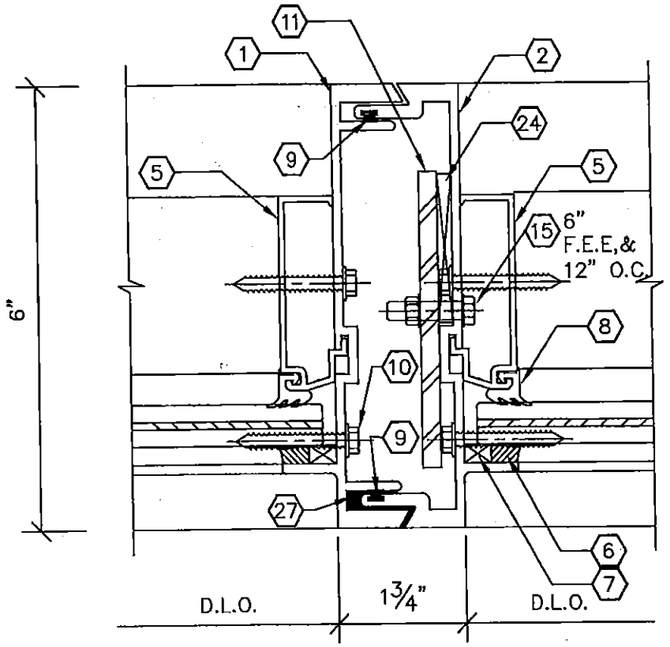

1B / 5 MULLION DETAIL
W/ STEEL REINFORCEMENT TYPE 1
3/16" X 4" FLAT BAR
STL. LENGTH = MULL. LENGTH – 40"

MULLION CHART

FRAME DIMENSIONS HEIGHT	WIDTH	ALLOWABLE DESIGN PRESSURE - PSF DETAIL 1A +	DETAIL 1A -	DETAIL 1B +	DETAIL 1B -
84"	36"	75	80	90	105
	48"	75	80	90	105
	60"	75	80	90	105
	72"	75	80	90	105
	84"	75	80	90	105
96"	36"	75	80	90	105
	48"	75	80	90	105
	60"	75	80	90	105
	72	75	80	90	105
	84	75	80	90	105
108"	36"	75	80	90	105
	48"	75	80	90	105
	60"	75	80	90	105
	72	75	80	90	105
120"	36"	75	80	90	105
	48"	75	80	90	105
	60"	75	80	90	105
	72	-	-	-	-
132"	36	-	-	-	-
	48	-	-	-	-
	60	-	-	-	-
144"	36	-	-	-	-
	48	-	-	-	-
	60	-	-	-	-

OTHER CONFIGURATIONS

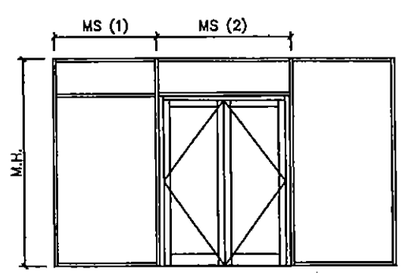

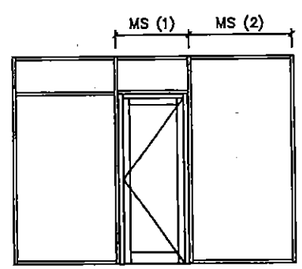

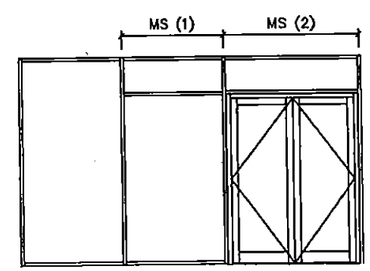

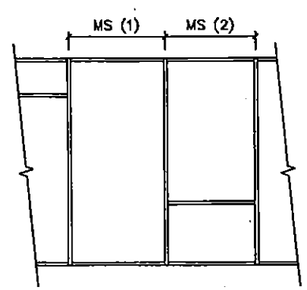

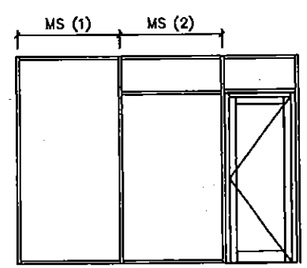

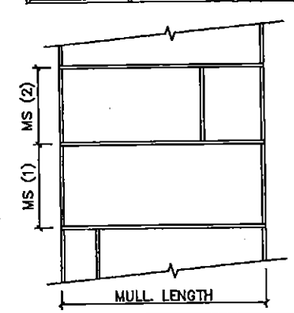

PRODUCT REVISED
as complying with the Florida Building Code
NOA-No. 16-0224.01
Expiration Date 03/30/2017
By
Miami-Dade Product Control

ENGINEER:
SCOTT WOLTERS
FL PE# 62354
WOLTERS ENGINEERING STATE OF
(COA# 27194)
15211 97TH ROAD N MAY 1 0 2016
WEST PALM BEACH, FL 33412
SCOTT WOLTERS
No 62354
PROFESSIONAL ENGINEER

REVISIONS:
5 10/21/15
4 11/18/10
3 7/16/10

SCALE: N.T.S.
DRAWN BY: SW
DATE: 10/3/05

PGC
PERSPECTIVE GLASS COMPANY
Glazing Contractors

DRAWING TITLE: CGC-6000 LARGE MISSILE IMPACT RESISTANT SYSTEM
DWG. # 6000-LMI
PAGE TITLE:
PAGE NO. 5/12

750 Southwest 14th Avenue Pompano Beach, Florida 33069 ph.(954) 773-9714 fax (954) 971-6614

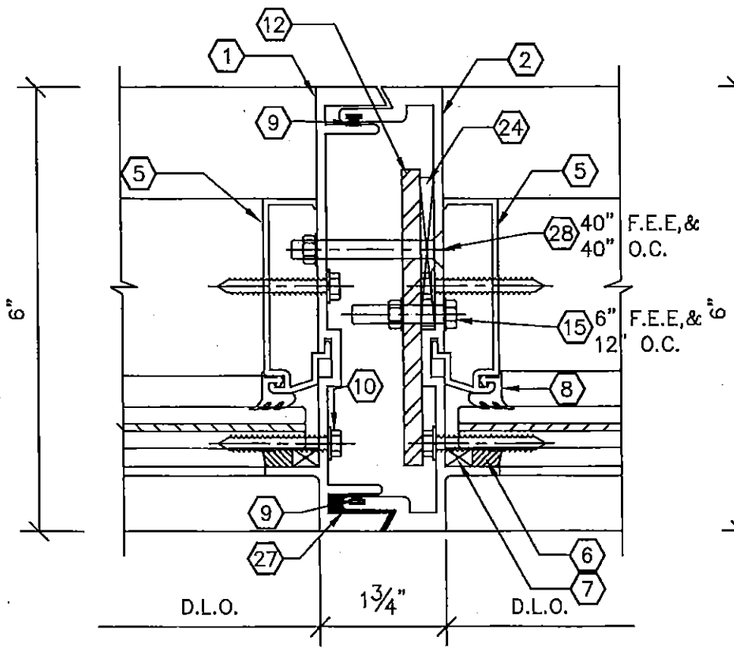

1C / 6 MULLION DETAIL
W/ STEEL REINFORCEMENT TYPE 2
1/4" X 4" FLAT BAR
STL. LENGTH = MULL. LENGTH – 6"

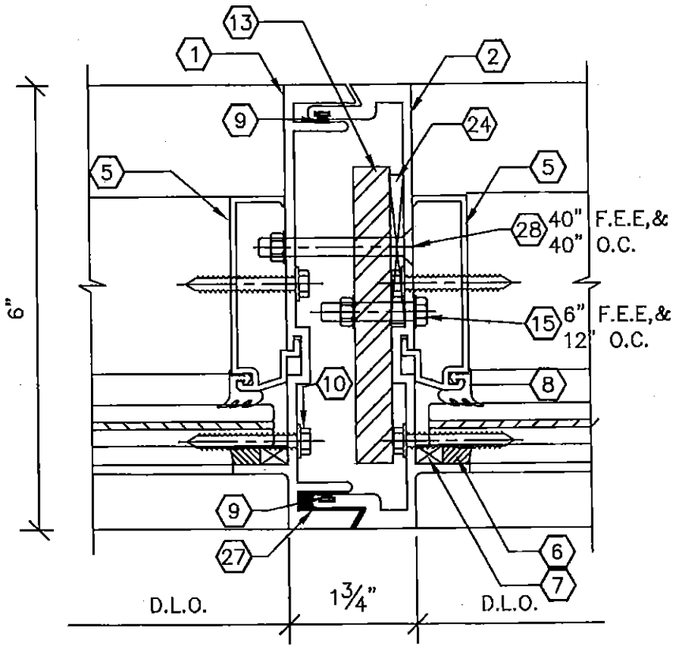

1D / 6 MULLION DETAIL
W/ STEEL REINFORCEMENT TYPE 3
1/2" X 4" FLAT BAR
STL. LENGTH = MULL. LENGTH – 6"

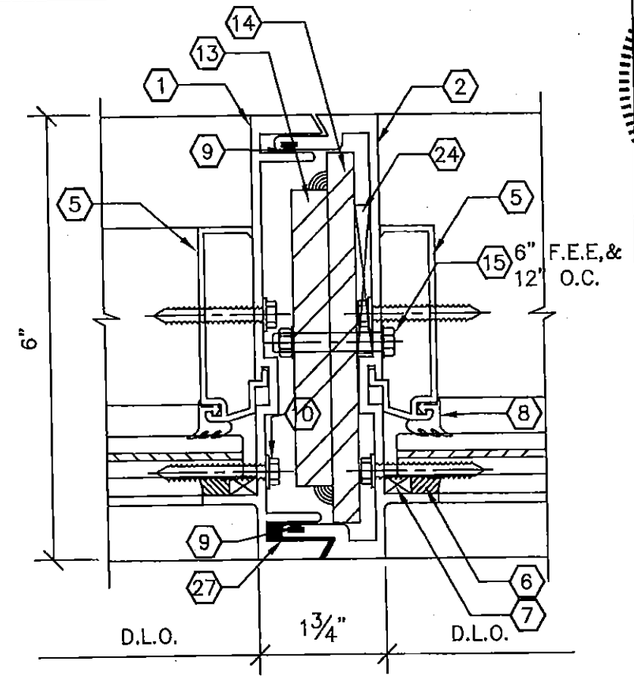

1E / 6 MULLION DETAIL
W/ STEEL REINFORCEMENT TYPE 4
1/2" X 4" & 3/8" X 5 FLAT BAR
STL. LENGTH = MULL. LENGTH – 24"

MULLION CHART

FRAME DIMENSIONS		ALLOWABLE DESIGN PRESSURE (PSF)					
		DETAIL 1C (or 6/11)		DETAIL 1D		DETAIL 1E	
HEIGHT	WIDTH	+	-	+	-	+	-
	36"	90	105	90	130	90	130
84"	48"	90	105	90	130	90	130
	60"	90	105	90	130	90	130
	72	90	105	90	130	90	130
	84	90	105	90	130	90	130
	36"	90	105	90	130	90	130
96"	48"	90	105	90	130	90	130
	60"	90	105	90	130	90	130
	72	90	105	90	130	90	130
	84	90	105	90	130	90	130
	36"	90	105	90	130	90	130
108"	48"	90	105	90	130	90	130
	60"	90	105	90	130	90	130
	72	90	105	90	130	90	130
	36"	90	105	90	130	90	130
120"	48"	90	105	90	130	90	130
	60"	90	105	90	130	90	130
	69 5/8"	90	105	-	-	90	105
	72					90	105
	36	-	-	-	-	90	105
132"	48	-	-	-	-	90	105
	60	-	-	-	-	90	105
	36	-	-	-	-	90	105
144"	48	-	-	-	-	90	105
	60	-	-	-	-	90	105

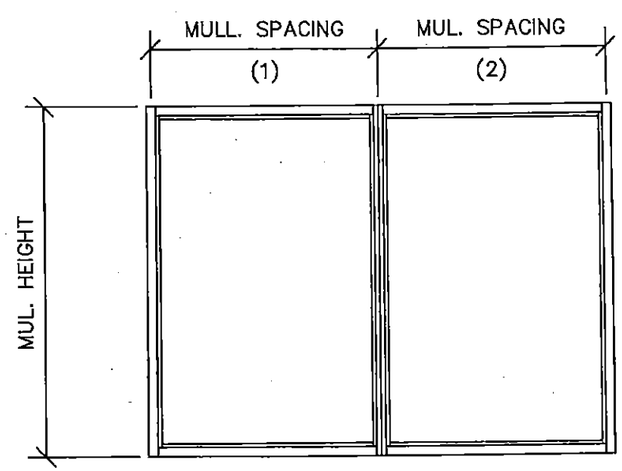

$$\text{WIDTH} = \frac{\text{MUL. SPACE(1)} + \text{MUL. SPACE(2)}}{2}$$

MULLION PROPERTIES

PART	Ixx (in^4)	Sxx (in^3)
CGL 6000	7.542	2.387
CGL 6001	7.046	2.226
3/16"x 4" STEEL	2.90 (AL)	0.5
1/4"x 4" STEEL	3.867 (AL)	0.667
1/2"x 4" STEEL	7.733 (AL)	1.333
3/8"x 5" STEEL	11.328 (AL)	1.562

PRODUCT REVISED
as complying with the Florida Building Code
NOA-No. 16-0224.01
Expiration Date 03/30/2017
By
Miami-Dade Product Control

ENGINEER:
SCOTT WOLTERS
FL PE# 62354
WOLTERS ENGINEERING
(COA# 27194)
15211 97TH ROAD N.
WEST PALM BEACH, FL 33412

REVISIONS:
5 10/21/15
4 11/18/10
3 7/16/10

SCALE: N.T.S.
DRAWN BY: SW
DATE: 10/3/05

PGC
PERSPECTIVE GLASS COMPANY
Glazing Contractors

DRAWING TITLE: CGC–6000 LARGE MISSILE IMPACT RESISTANT SYSTEM
DWG. # 6000–LMI
PAGE TITLE:
PAGE NO. 6/12

750 Southwest 14th Avenue Pompano Beach, Florida 33069 ph.(954) 773–9714 fax (954) 971–6614

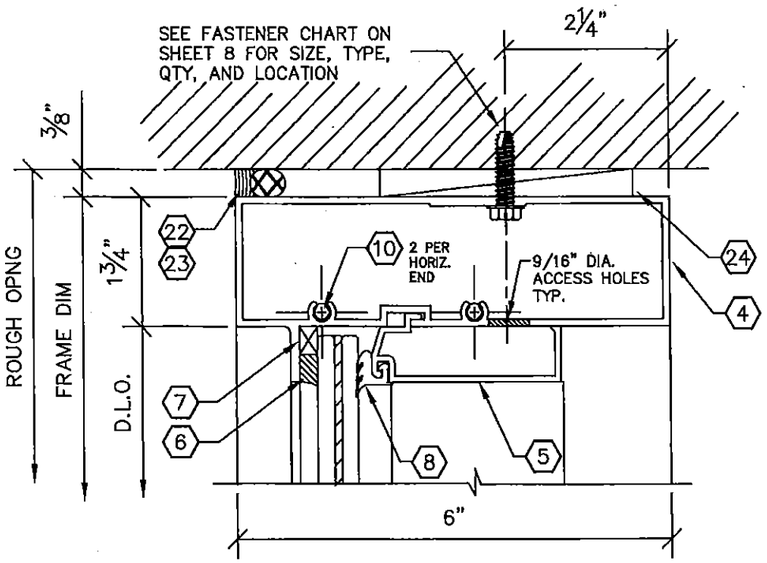

2/7 HEAD DETAIL

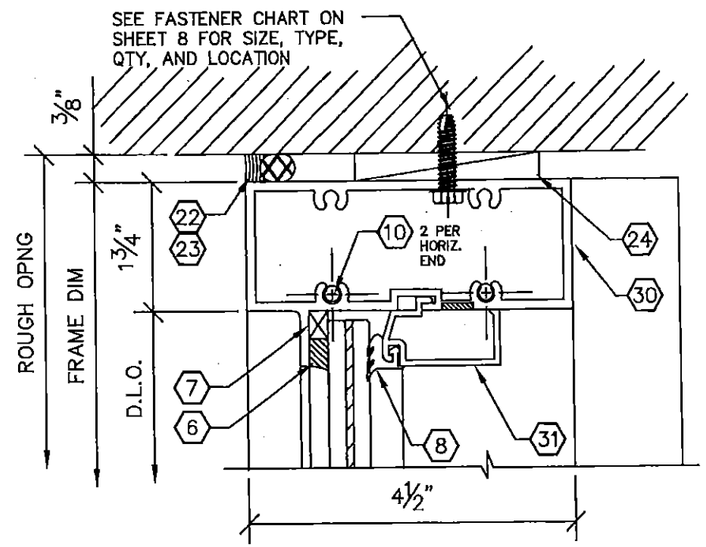

2A/7 OPTIONAL HEAD DETAIL

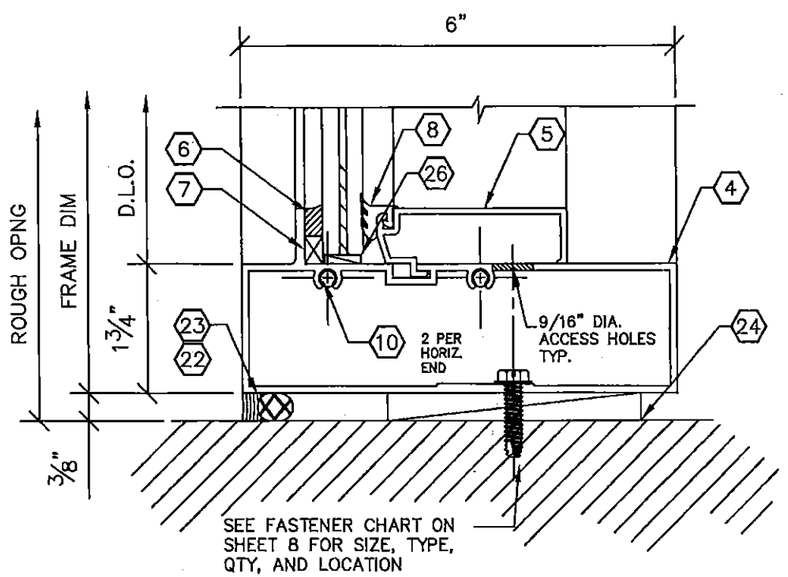

3/7 SILL DETAIL

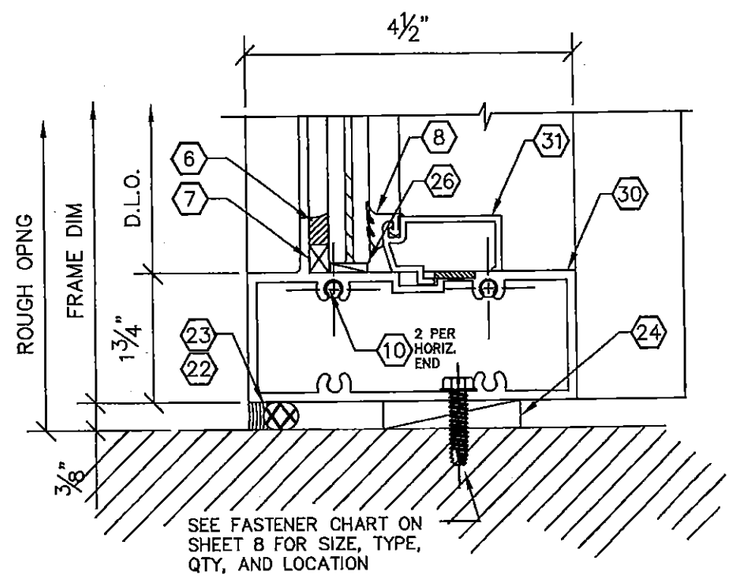

3A/7 OPTIONAL SILL DETAIL

PRODUCT REVISED
as complying with the Florida Building Code
NOA-No. 16-0224.01
Expiration Date 03/30/2017
By
Miami-Dade Product Control

ENGINEER:
SCOTT WOLTERS
FL PE# 62354 No 62354
WOLTERS ENGINEERING
(COA# 27142)
15211 97TH ROAD N.
WEST PALM BEACH, FL 33412
STATE OF FLORIDA PROFESSIONAL ENGINEER
MAY 19 2016

REVISIONS:	
5	10/21/15
4	11/18/10
3	7/16/10
SCALE:	N.T.S.
DRAWN BY:	SW
DATE:	10/3/05

PGC
PERSPECTIVE GLASS COMPANY
Glazing Competence

DRAWING TITLE: CGC-6000 LARGE MISSILE IMPACT RESISTANT SYSTEM
DWG. # 6000-LMI
PAGE NO. 7/12
PAGE TITLE:

750 Southwest 14th Avenue Pompano Beach, Florida 33069 ph.(954) 773-9714 fax (954) 771-1616

WOOD BUCKS AND METAL STRUCTURE NOT BY CGC. WOOD BUCKS MUST BE PROPERLY ATTACHED TO SUBSTRATE, TO TRANSFER LOADS IMPOSED BY GLAZING SYSTEM TO THE BUILDING STRUCTURE.

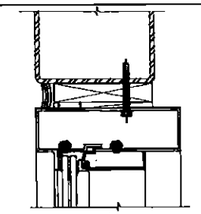

TYPE "B" IN STEEL OR ALUM. WITH WOOD BUCK

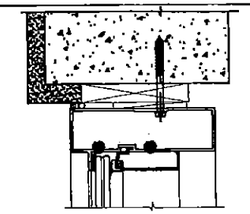

TYPE "C" IN CONCRETE WITH WOOD BUCK

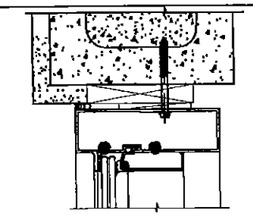

TYPE "C" IN CMU BLOCK WITH WOOD BUCK

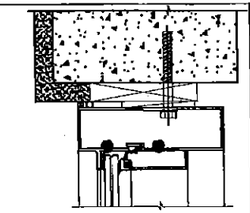

TYPE "D" IN CONCRETE WITH WOOD BUCK

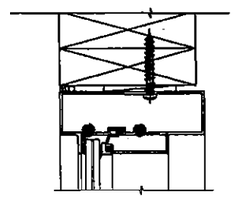

TYPE "A" IN WOOD

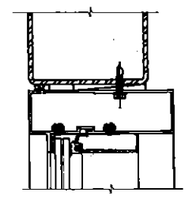

TYPE "B" IN STEEL OR ALUMINUM

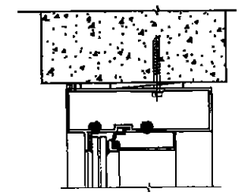

TYPE "C" IN CONCRETE

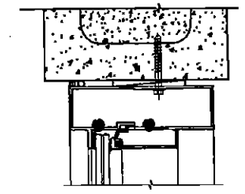

TYPE "C" IN CMU BLOCK

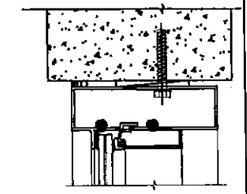

TYPE "D" IN CONCRETE

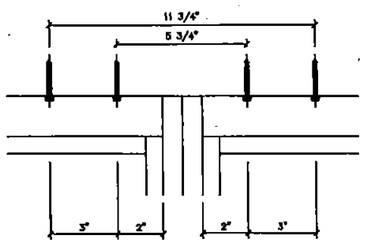

INTERMEDIATE VERTICAL

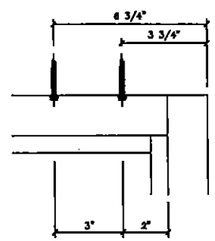

JAMB VERTICAL

ANCHOR PATTERN 2

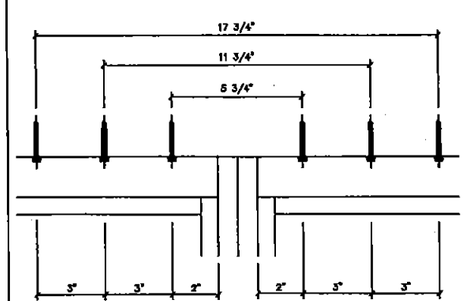

INTERMEDIATE VERTICAL

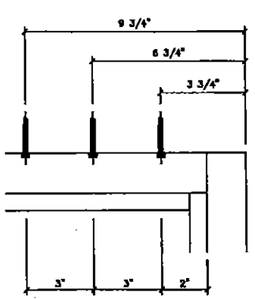

JAMB VERTICAL

ANCHOR PATTERN 3

PERIMETER FASTENER CHART

ALLOWABLE DESIGN PRESSURE (PSF)

FRAME DIMENSIONS		VALUES ARE FOR FASTENERS WITH SHIM SPACINGS UP TO 3/8" MAX										ALTERNATE VALUES FOR SHIM SPACING 1/4" OR LESS					
		TYPE A (WOOD)		TYPE B (ALUM. OR STEEL)		TYPE C (CONCRETE)		TYPE C (CMU)		TYPE D (CONCRETE)		TYPE B (ALUM. OR STEEL)		TYPE C (CONCRETE)		TYPE C (CMU BLOCK)	
		ANCHOR PATTERN	ANCHOR PATTERN	ANCHOR PATTERN	ANCHOR PATTERN	ANCHOR PATTERN	ANCHOR PATTERN	ANCHOR PATTERN	ANCHOR PATTERN	ANCHOR PATTERN	ANCHOR PATTERN	ANCHOR PATTERN	ANCHOR PATTERN	ANCHOR PATTERN	ANCHOR PATTERN	ANCHOR PATTERN	ANCHOR PATTERN
HEIGHT	WIDTH	#2	#3	#2	#3	#2	#3	#2	#3	#2	#3	#2	#3	#2	#3	#2	#3
	36"	77.7	116.6	94.9	130.0	108.6	130.0	71.6	107.4	130.0	130.0	130.0	130.0	130.0	130.0	130.0	130.0
	48"	58.3	87.4	71.1	108.7	81.4	122.1	53.7	80.6	130.0	130.0	112.9	130.0	111.4	130.0	130.0	130.0
84"	60"	46.6	69.9	56.9	85.4	65.1	97.7	43.0	64.5	130.0	130.0	90.3	130.0	89.1	130.0	130.0	130.0
	72	38.9	58.3	47.4	71.1	54.3	81.4	35.8	53.7	130.0	130.0	75.2	112.9	74.3	111.4	130.0	130.0
	84	33.3	50.0	40.7	61.0	46.5	69.8	30.7	46.0	117.6	130.0	64.5	96.7	63.7	95.5	130.0	130.0
	36"	68.0	102.0	83.0	124.5	95.0	130.0	62.7	94.0	130.0	130.0	130.0	130.0	130.0	130.0	130.0	130.0
	48"	51.0	76.5	62.3	93.4	71.3	106.9	47.0	70.5	130.0	130.0	98.8	130.0	97.5	130.0	130.0	130.0
96"	60"	40.8	61.2	49.8	74.7	57.0	85.5	37.6	56.4	130.0	130.0	79.0	118.5	78.0	117.0	130.0	130.0
	72	34.0	51.0	41.5	62.3	47.5	71.3	31.3	47.0	120.0	130.0	65.8	98.8	65.0	97.5	130.0	130.0
	84	29.1	43.7	35.6	53.4	40.7	61.1	26.9	40.3	102.9	130.0	56.4	84.6	55.7	83.6	130.0	130.0
	36"	60.4	90.7	73.8	110.7	84.4	126.7	55.7	83.6	130.0	130.0	117.0	130.0	115.6	130.0	130.0	130.0
	48"	45.3	68.0	55.3	83.0	63.3	95.0	41.8	62.7	130.0	130.0	87.8	130.0	86.7	130.0	130.0	130.0
108"	60"	36.3	54.4	44.3	66.4	50.7	76.0	33.4	50.1	128.0	130.0	70.2	105.3	69.3	104.0	130.0	130.0
	72	30.2	45.3	36.9	55.3	42.2	63.3	27.9	41.8	106.7	130.0	58.5	87.8	57.8	86.7	130.0	130.0
	84	25.9	38.9	31.6	47.4	36.2	54.3	23.9	35.8	91.4	130.0	50.2	75.2	49.6	74.3	130.0	130.0
	36	54.4	81.6	66.4	99.6	76.0	114.0	50.1	75.2	130.0	130.0	105.3	130.0	104.0	130.0	130.0	130.0
	48"	40.8	61.2	49.8	74.7	57.0	85.5	37.6	56.4	130.0	130.0	79.0	118.5	78.0	117.0	130.0	130.0
120"	60"	32.6	49.0	39.8	59.8	45.6	68.4	30.1	45.1	115.2	130.0	63.2	94.8	62.4	93.6	130.0	130.0
	72	27.2	40.8	33.2	49.8	38.0	57.0	25.1	37.6	96.0	130.0	52.7	79.0	52.0	78.0	130.0	130.0
	36	49.5	74.2	60.4	90.5	69.1	103.6	45.6	68.4	105.0	105.0	95.8	105.0	94.5	105.0	105.0	105.0
132"	48	37.1	55.6	45.3	67.9	51.8	77.7	34.2	51.3	105.0	105.0	71.8	105.0	70.9	105.0	105.0	105.0
	60	29.7	44.5	36.2	54.3	41.5	62.2	27.3	41.0	104.7	105.0	57.5	86.2	56.7	85.1	105.0	105.0
	66	27.0	40.5	32.9	49.4	37.7	56.5	24.9	37.3	95.2	105.0	52.2	78.3	51.6	77.4	105.0	105.0
	36	45.3	68.0	55.3	83.0	63.3	95.0	41.8	62.7	105.0	105.0	87.8	105.0	86.7	105.0	105.0	105.0
144"	48	34.0	51.0	41.5	62.3	47.5	71.3	31.3	47.0	105.0	105.0	65.8	98.8	65.0	97.5	105.0	105.0
	60	27.2	40.8	33.2	49.8	38.0	57.0	25.1	37.6	96.0	105.0	52.7	79.0	52.0	78.0	105.0	105.0

TYPICAL ANCHORS

TYPE A: #14 PAN HEAD SHEET METAL SCREW OR WOOD SCREW (Gr. 5 MIN) INTO WOOD (S.G. = 0.55 MIN) WITH 2 1/4" EMBEDMENT, 1 3/4" EDGE DISTANCE.

TYPE B: 1/4"–20 HEX HEAD THREAD FORMING SCREW (Gr. 5 MIN). THROUGH STEEL (16 Ga, A36 MIN) OR ALUMINUM (1/8", 6063–T6 MIN), WITH FULL EMBEDMENT AND 3/4" EDGE DISTANCE.

TYPE C: 1/4" HEX HEAD ELCO ULTRACON DIRECTLY INTO CONCRETE (2846 psi MIN) OR CMU (ASTM C90, 2000 psi MIN) OR THRU WOOD BUCK INTO CONCRETE/CMU, WITH 1 3/4" EMBEDMENT, 2 1/2" EDGE DISTANCE.

TYPE D: 3/8" POWERS WEDGE BOLT + DIRECTLY INTO CONCRETE (4000 psi MIN), OR THRU WOOD BUCK INTO CONCRETE, WITH 2 1/2" EMBEDMENT AND 3 3/4" EDGE DISTANCE.

PRODUCT REVISED
as complying with the Florida Building Code
NOA-No. 16-0224.01
Expiration Date 03/30/2017
By
Miami-Dade Product Control

ENGINEER:
SCOTT WOLTERS
FL PE# 62354
WOLTERS ENGINEERING
(COA# 27197)
15211 97TH ROAD N.
WEST PALM BEACH, FL 33412
SCOTT WOLTERS SEAL No 62354 STATE OF FLORIDA PROFESSIONAL ENGINEER MAY 19, 2006

REVISIONS:
5 10/21/15
4 11/18/10
3 7/16/10

SCALE: N.T.S.
DRAWN BY: SW
DATE: 10/3/05

PGC
PERSPECTIVE GLASS COMPANY
Glazing Contractors

DRAWING TITLE: CGC–6000 LARGE MISSILE IMPACT RESISTANT SYSTEM
DWG. # 6000–LMI
PAGE TITLE:
PAGE NO. 8/12

750 Southwest 14th Avenue Pompano Beach, Florida 33069 ph.(954) 773–9714 fax (954) 971–8614

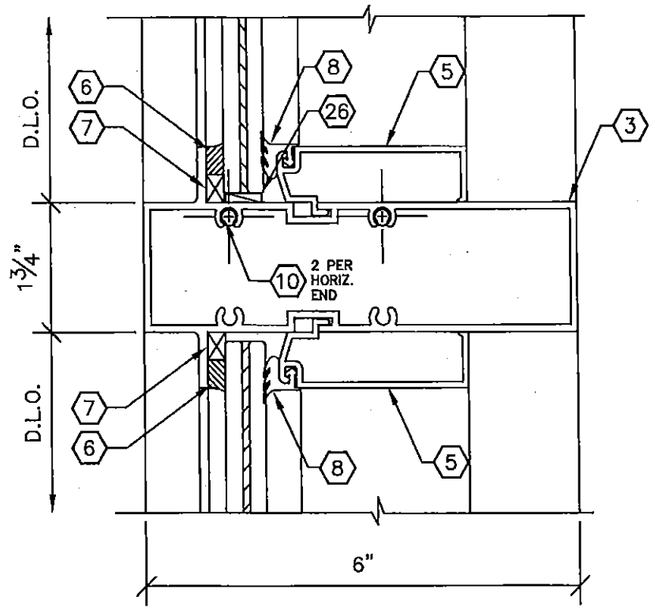

4/9 HORIZONTAL DETAIL

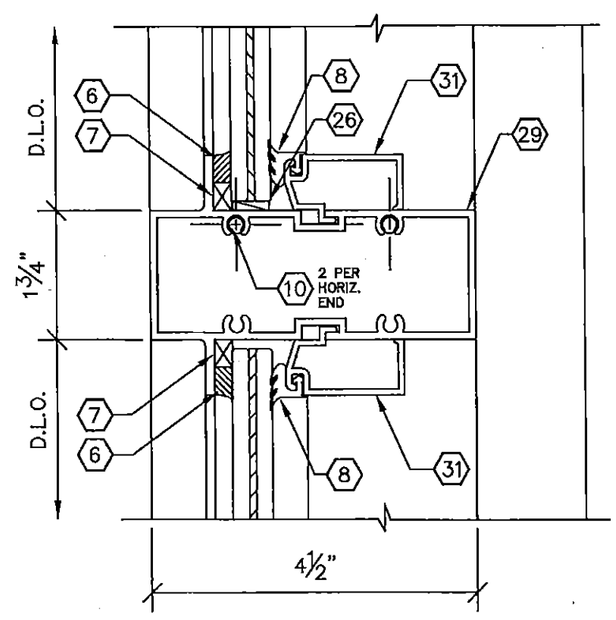

4A/9 OPTIONAL HORIZONTAL DETAIL

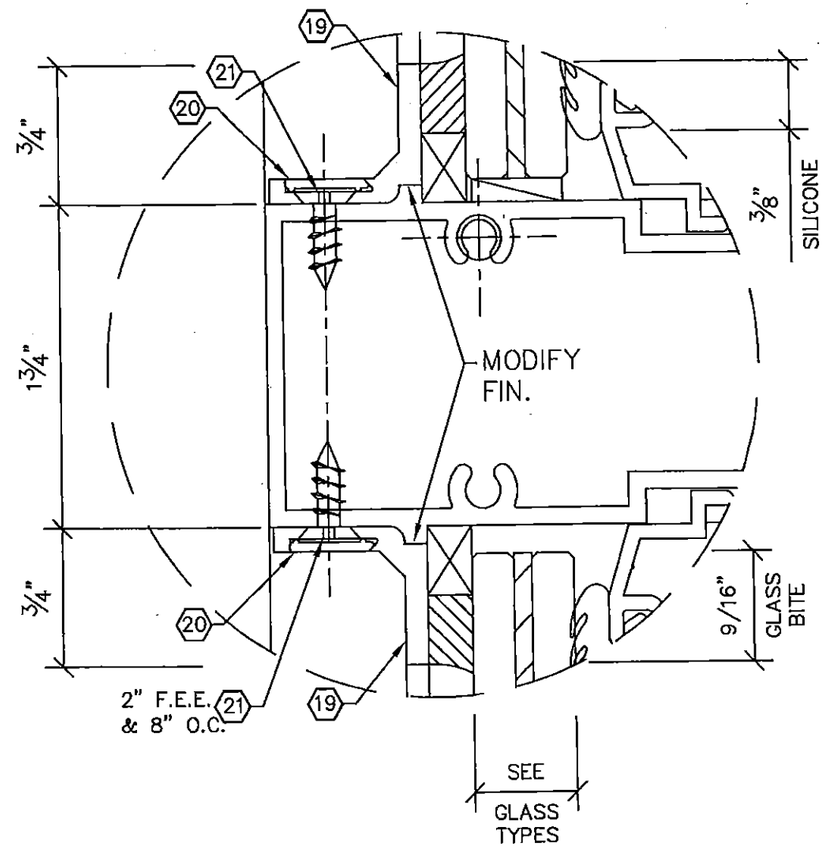

ALTERNATE GLAZING DETAIL
FOR HEAD, HORIZONTAL, SILL, VERTICAL, AND JAMB.

PRODUCT REVISED
as complying with the Florida Building Code
NOA-No. 16-0224.01
Expiration Date 03/30/2017
By
Miami-Dade Product Control

ENGINEER:
SCOTT WOLTERS
FL PE# 62354
WOLTERS ENGINEERING
(COA# 27194)
15211 97TH ROAD N. MADIRA, ONE
WEST PALM BEACH, FL 33412
STATE OF FLORIDA
PROFESSIONAL ENGINEER
SCOTT WOLTERS
No 62354

REVISIONS:
5 10/21/15
4 11/18/10
3 7/16/10

SCALE: N.T.S.
DRAWN BY: SW
DATE: 10/3/05

PGC
PERSPECTIVE GLASS COMPANY
Glazing Contractors

DRAWING TITLE: CGC-6000 LARGE MISSILE IMPACT RESISTANT SYSTEM
DWG. # 6000-LMI
PAGE TITLE:
PAGE NO. 9/12

750 Southwest 14th Avenue Pompano Beach, Florida 33069 ph.(954) 773-9714 fax (954) 971-6614

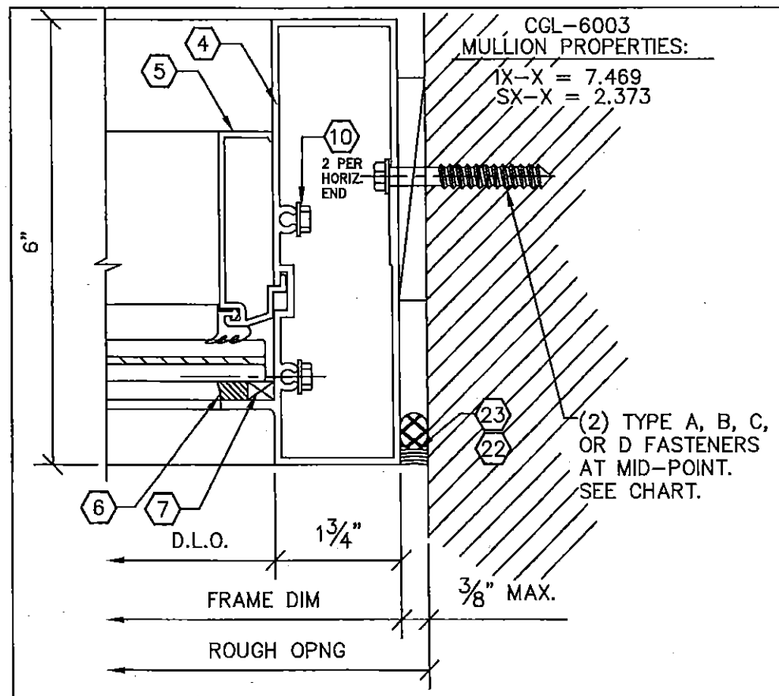

5 / 10 JAMB DETAIL

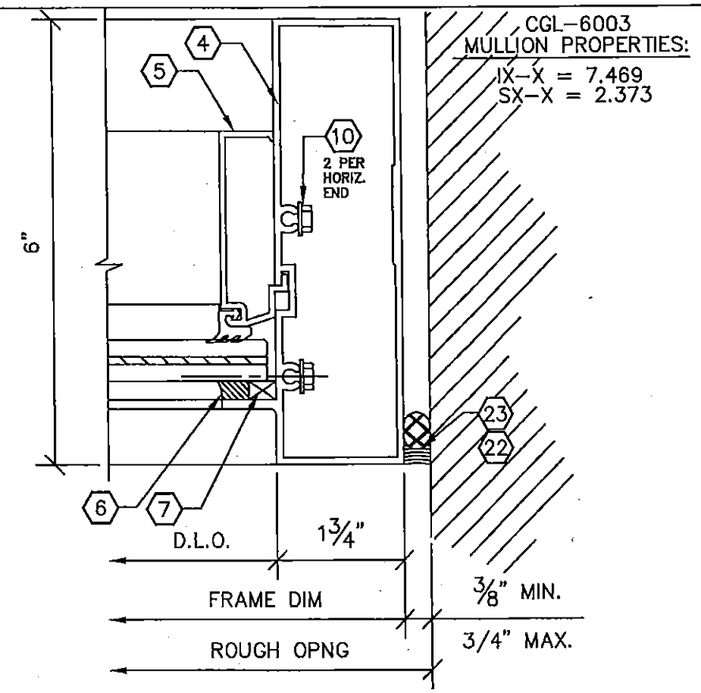

5B / 10 JAMB DETAIL (NO FASTENERS)

JAMB MULLION CHART - DETAIL 5B

CAULK MATERIAL:		SIKAFLEX 1A or TREMCO DYMONIC		DOW 790 or DOW 795	
CAULK JOINT WIDTH:		3/8" - 1/2"	1/2" - 3/4"	3/8" - 1/2"	1/2" - 3/4"
FRAME DIMENSIONS		ALLOWABLE DESIGN PRESSURE (PSF)			
HEIGHT	WIDTH				
	12"	130	130	130	130
	18"	130	130	130	130
96"	24"	114	130	130	130
	30"	91.2	121.6	130	130
	36"	76	101.3	113.3	130
	42"	65.1	86.8	97.1	129.4
	12"	130	130	130	130
	18"	94.9	126.5	130	130
108"	24"	71.2	94.9	106.1	130
	30"	56.9	75.9	84.9	113.1
	36"	47.4	63.2	70.7	94.3
	42"	40.7	54.2	60.6	80.8
	12"	93.4	124.5	130	130
	18"	62.3	83	92.8	123.7
120"	24"	46.7	62.2	69.6	92.8
	30"	37.4	49.8	55.7	74.2
	36"	31.1	41.5	46.4	61.9
	12"	63.8	85	95	105
132"	18"	42.5	56.7	63.4	84.5
	24"	31.9	42.5	47.5	63.4
	30"	25.5	34	38	50.7
	12"	45	60	67.1	89.5
144"	18"	30	40	44.7	59.7
	24"	22.5	30	33.6	44.7
	30"	18	24	26.8	35.8

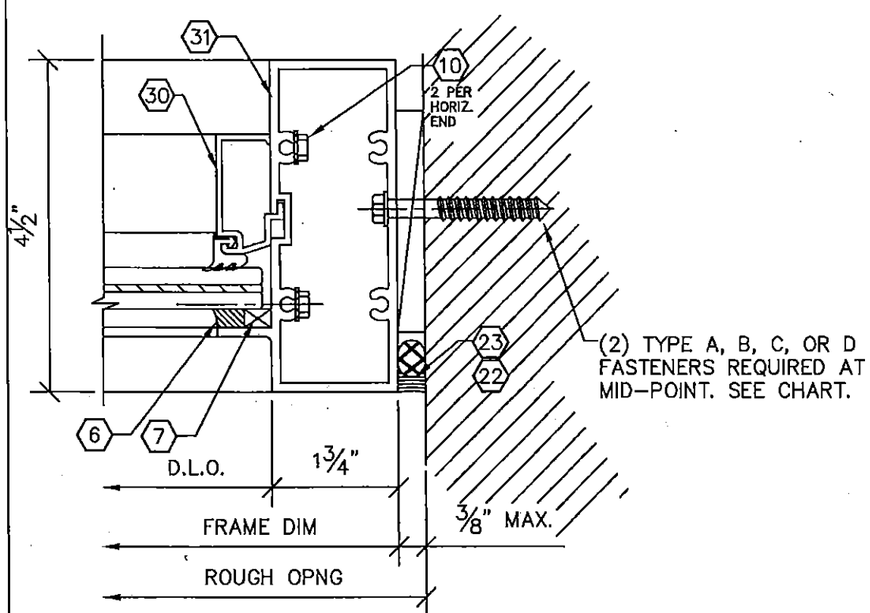

5A / 10 JAMB DETAIL

JAMB MULLION CHART - DETAILS 5 & 5A

		ALLOWABLE DESIGN PRESSURE (PSF)				
FRAME DIMENSIONS		(2) TYPE A	(2) TYPE B	(2) TYPE C	(2) TYPE C	(2) TYPE D
HEIGHT	WIDTH	(WOOD)	(METAL)	(CONCRETE)	(CMU)	(CONCRETE)
	12"	93.3	113.8	130.0	85.9	130.0
	18"	62.2	75.9	86.9	57.3	130.0
84"	24"	46.6	56.9	65.1	43.0	130.0
	30"	37.3	45.5	52.1	34.4	130.0
	36"	31.1	37.9	43.4	28.6	109.7
	42"	26.6	32.5	37.2	24.6	94.0
	12"	81.6	99.6	114.0	75.2	130.0
	18"	54.4	66.4	76.0	50.1	130.0
96"	24"	40.8	49.8	57.0	37.6	130.0
	30"	32.6	39.8	45.6	30.1	115.2
	36"	27.2	33.2	38.0	25.1	96.0
	42"	23.3	28.5	32.6	21.5	82.3
	12"	72.5	88.5	101.3	66.8	130.0
	18"	48.4	59.0	67.6	44.6	130.0
108"	24"	36.3	44.3	50.7	33.4	128.0
	30"	29.0	35.4	40.5	26.7	102.4
	36"	24.2	29.5	33.8	22.3	85.3
	42"	20.7	25.3	29.0	19.1	73.1
	12"	65.3	79.7	91.2	60.2	130.0
	18"	43.5	53.1	60.8	40.1	130.0
120"	24"	32.6	39.8	45.6	30.1	115.2
	30"	26.1	31.9	36.5	24.1	92.2
	36"	21.8	26.6	30.4	20.1	76.8
	12"	59.3	72.4	82.9	54.7	105.0
132"	18"	39.6	48.3	55.3	36.5	105.0
	24"	29.7	36.2	41.5	27.3	104.7
	30"	23.7	29.0	33.2	21.9	83.8
	12"	54.4	66.4	76.0	50.1	105.0
144"	18"	36.3	44.3	50.7	33.4	105.0
	24"	27.2	33.2	38.0	25.1	96.0
	30"	21.8	26.6	30.4	20.1	76.8

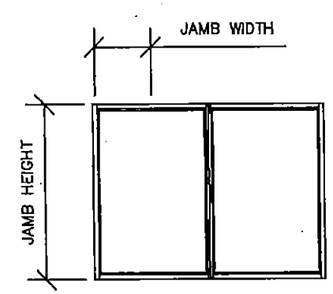

PRODUCT REVISED
as complying with the Florida Building Code
NOA-No. 16-0224.01
Expiration Date 03/30/2017
By
Miami-Dade Product Control

ENGINEER:
SCOTT WOLTERS
FL PE# 62354
WOLTERS ENGINEERING
(COA# 27192)
15211 97TH ROAD N.
WEST PALM BEACH, FL 33412
STATE OF FLORIDA
SCOTT WOLTERS
No 62354
PROFESSIONAL ENGINEER
MAY 9, 2006

REVISIONS:
5 10/21/15
4 11/18/10
3 7/16/10

SCALE: N.T.S.
DRAWN BY: SW
DATE: 10/3/05

PGC
PERSPECTIVE GLASS COMPANY
Glazing Contractors

DRAWING TITLE: CGC-6000 LARGE MISSILE IMPACT RESISTANT SYSTEM
DWG. # 6000-LMI
PAGE TITLE:
PAGE NO. 10/12

750 Southwest 14th Avenue Pompano Beach, Florida 33069 ph.(954) 773-9714 fax (954) 971-6614

MATERIALS

ITEM NO.	PART NO.	QTY.	DESCRIPTION	MATERIAL	MFGR / SUPPLIER / REMARKS
1	CGL-6000		FEMALE MULLION	6063-T6	CUSTOM GLASS
2	CGL-6001		MALE MULLION	6063-T6	CUSTOM GLASS
3	CGL-6002		HORIZONTAL	6063-T6	CUSTOM GLASS
4	CGL-6003		PERIMETER HEAD, SILL & JAMB	6063-T6	CUSTOM GLASS
5	CGL-6004		GLAZING STOP	6063-T6	CUSTOM GLASS
6	DC-995		STRUCTURAL SEALANT	SILICONE	DOW CORNING
6	PROGLAZE		STRUCTURAL SEALANT	SILICONE	TREMCO
6	SPECTUM II		STRUCTURAL SEALANT	SILICONE	TREMCO
7	TAPE		1/4" X3/8" FOAM TAPE (ADHESIVE ONE SIDE)		H.O. PRODUCTS
8	H83		EXTRUDED GASKET	VINYL	UNIVERSAL RUBBER
9	HI-FIN		7900 SERIES	PILE	SCHLEGEL
1	FASTENER		#12 X 1 1/2 HWH SMS (1 1/4" IN SPLINE)		I.S.C.
1	TYPE 1		3/16" X 4" FLAT BAR	A529 or A572 GR. 50	W/ SHOP PRIMER
12	TYPE 2		1/4" X 4" FLAT BAR	A529 or A572 GR. 50	W/ SHOP PRIMER
13	TYPE 3		1/2" X 4" FLAT BAR	A529 or A572 GR. 50	W/ SHOP PRIMER
14	TYPE 4		3/8" X 5" FLAT BAR	A529 or A572 GR. 50	W/ SHOP PRIMER
15	FASTENER		1/4-20 X 1 1/2" HD MS	SAE GR. 2	
16	FASTENER		1/4-20 X 1 3/4" HD MS	SAE GR. 2	
18			1/4" DIA. HEX NUT	SAE GR. 2	
19	CGL-4505		3/4" APPLIED SPANDREL ADAPTOR	6063-T6	CUSTOM GLASS
20	CGL-4506		APPLIED COVER	6063-T6	CUSTOM GLASS
21	FASTENER		#10 X 1/2" FH SMS (UNDER CUT)	SAE GR. 2	
22	SEALANT		WEATHER SEAL	SIKAFLEX 1A	SIKA
23			BACKER ROD OPEN CELL	POLYETHYLENE	TUNDRA
24	SHIM		SHIM	PLASTIC	
25	SM5504		NARROW JOINT SEALANT	ACRYL-P	SCHNEE-MOOREHEAD
26	SET BLK		3/16" x 1/2" x 4" LONG SETTING BLOCK	EPDM	AT 1/4 POINTS
27	SEALANT		SIKAFLEX 1A	CAULK	SIKA
28	FASTENER		1/4"-20 x 2" FH MACHINE SCREW	SAE GR. 2	I.S.C.
29	CGL-4502		4 1/2" HORIZONTAL	6063-T6	CUSTOM GLASS
30	CGL-4503		4 1/2" HEAD/SILL/JAMB	6063-T6	CUSTOM GLASS
31	CGL-4504		4 1/2" GLAZING STOP	6063-T6	CUSTOM GLASS

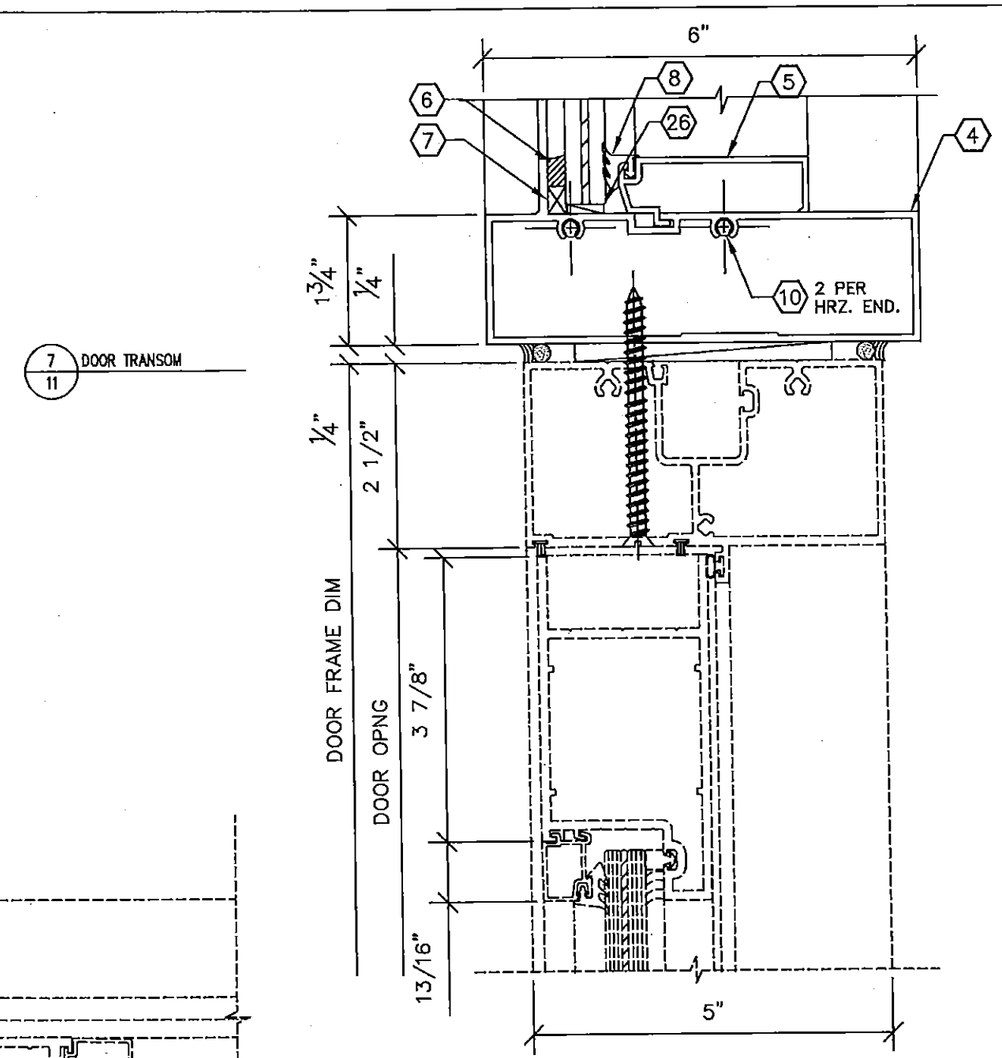

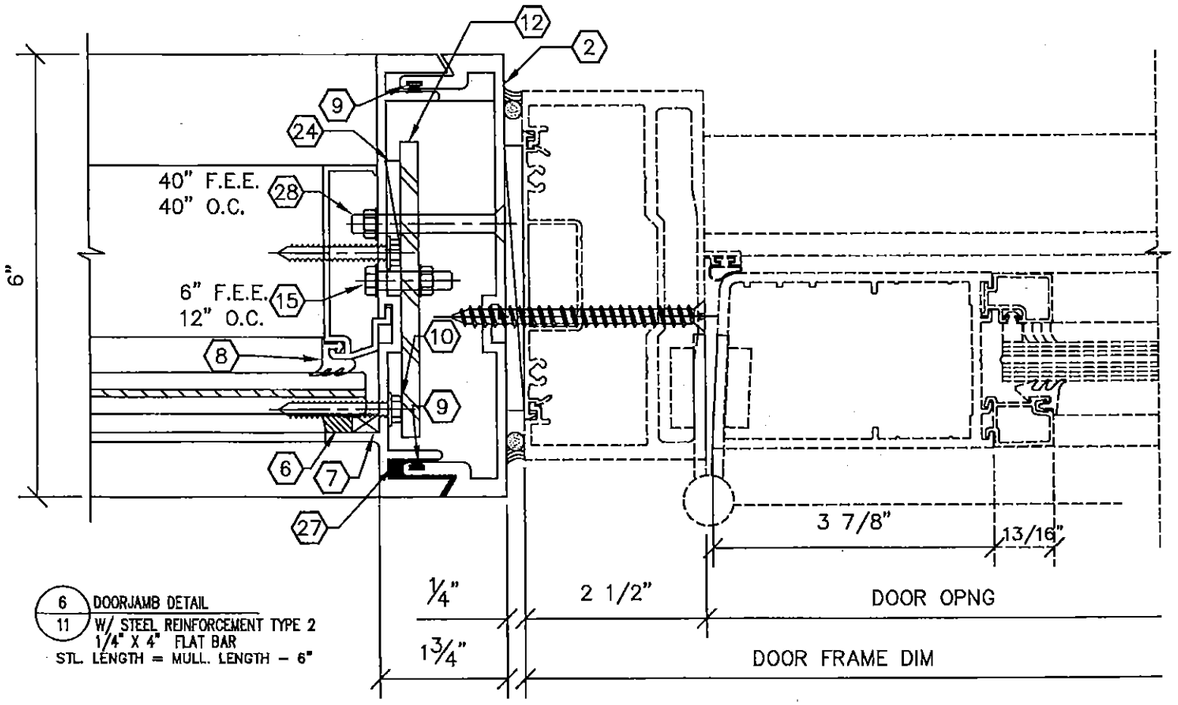

6/11 DOORJAMB DETAIL
W/ STEEL REINFORCEMENT TYPE 2
1/4" X 4" FLAT BAR
STL. LENGTH = MULL. LENGTH – 6"

PLEASE NOTE: YKK DOOR DETAILS ARE SHOWN FOR REFERENCE ONLY. ANY MIAMI–DADE APPROVED DOOR MAY BE USED WITH THIS SYSTEM. PLEASE SEE DOOR APPROVAL FOR FASTENER TYPE AND LOCATION.

PRODUCT REVISED
as complying with the Florida Building Code
NOA-No. 16-0224.01
Expiration Date 03/30/2017
By
Miami-Dade Product Control

ENGINEER:
SCOTT WOLTERS
FL PE# 62254
WOLTERS ENGINEERING
(COA# 27194)
15211 97TH ROAD
WEST PALM BEACH, FL 33412
SCOTT WOLTERS STATE OF FLORIDA PROFESSIONAL ENGINEER

REVISIONS:
5 10/21/15
4 11/18/10
3 7/16/10

SCALE: N.T.S.
DRAWN BY: SW
DATE: 10/3/05

PGC
PERSPECTIVE GLASS COMPANY
Glazing Contractors

DRAWING TITLE: CGC–6000 LARGE MISSILE IMPACT RESISTANT SYSTEM
DWG. # 6000–LMI
PAGE TITLE:
PAGE NO. 11/12

750 Southwest 14th Avenue Pompano Beach, Florida 33069 ph.(954) 773–9714 fax (954) 971–6614

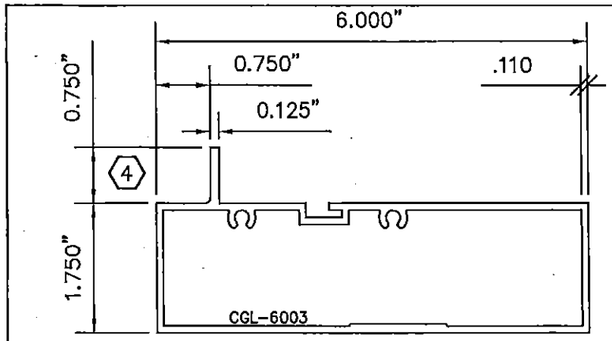

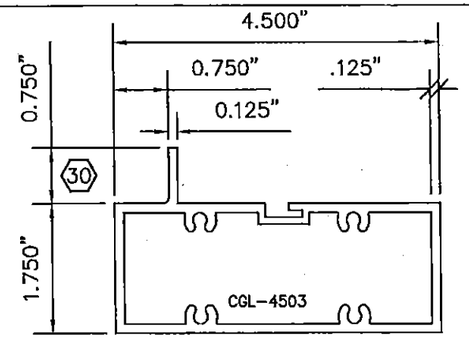

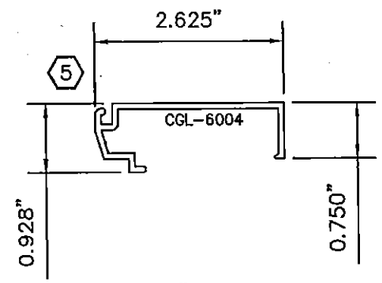

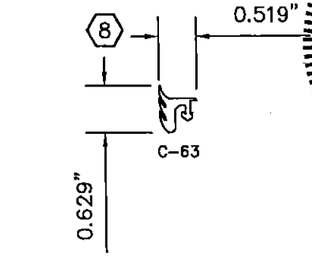

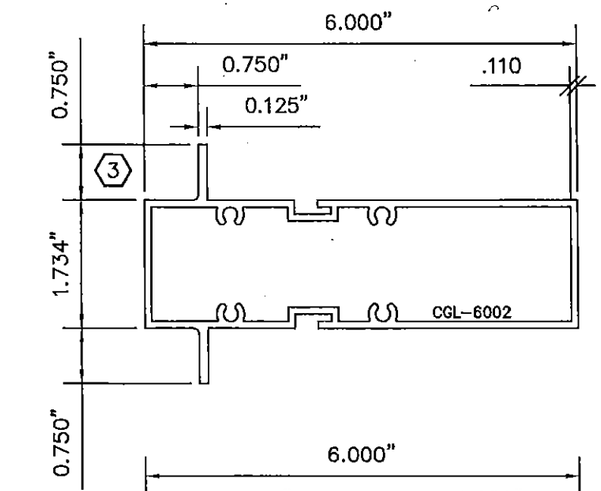

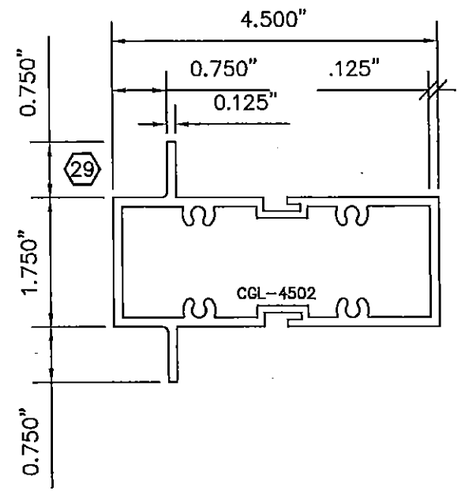

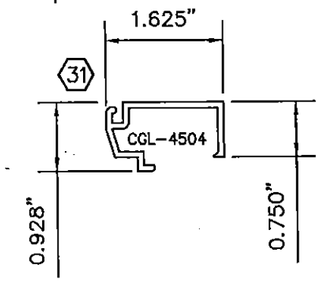

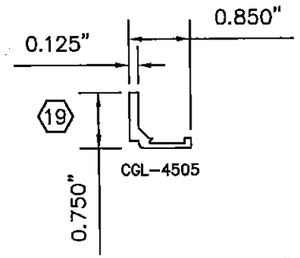

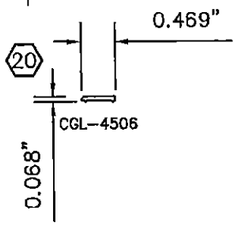

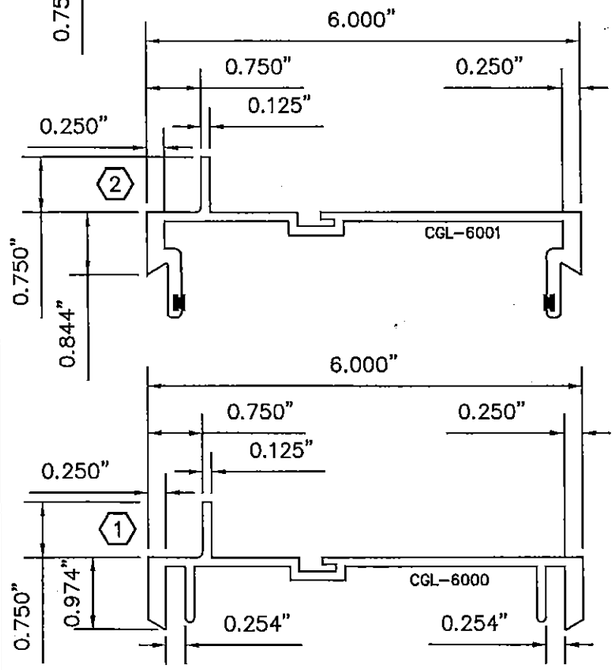

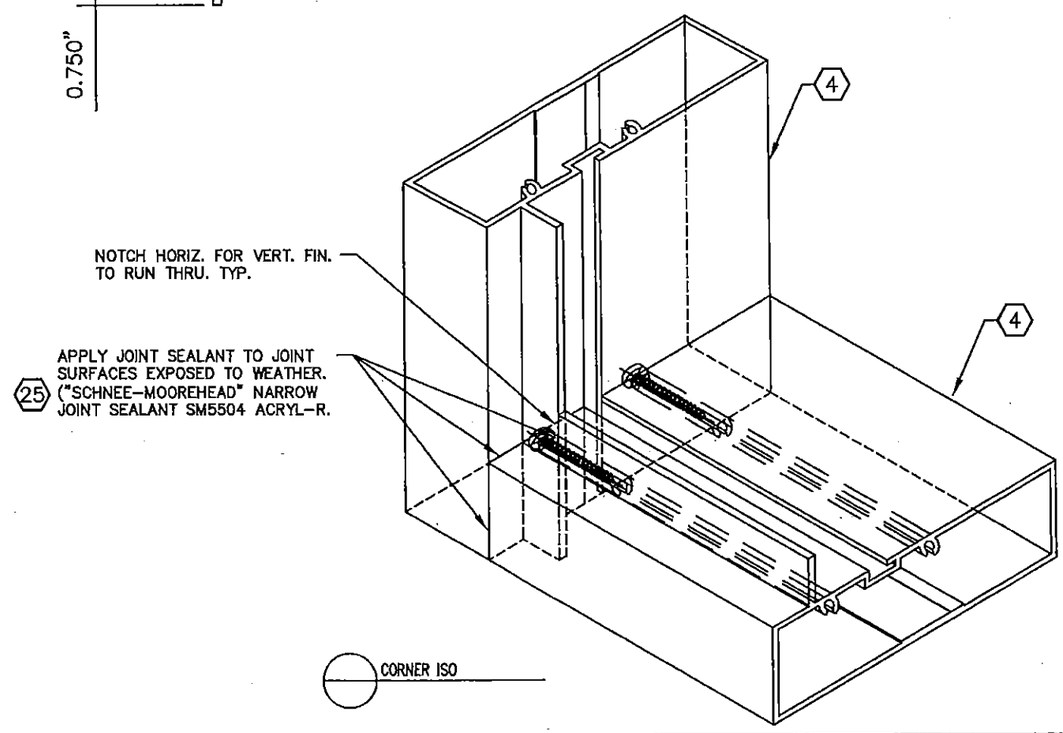

PRODUCT REVISED
as complying with the Florida Building Code
NOA-No. 16-0224.01
Expiration Date 03/30/2017
By
Miami-Dade Product Control

ENGINEER:
SCOTT WOLTERS
FL PE# 62334
WOLTERS ENGINEERING
(COA# 27194)
15211 97TH ROAD
WEST PALM BEACH, FL 33412

SCOTT WOLTERS ★ STATE OF FLORIDA ★ PROFESSIONAL ENGINEER

REVISIONS:	
5	10/21/15
4	11/18/10
3	7/16/10

SCALE: N.T.S.
DRAWN BY: SW
DATE: 10/3/05

PGC
PERSPECTIVE GLASS COMPANY
Glazing Contractors

DRAWING TITLE: CGC-6000 LARGE MISSILE IMPACT RESISTANT SYSTEM
DWG. # 6000-LMI
PAGE TITLE:
PAGE NO. 12/12

750 Southwest 14th Avenue Pompano Beach, Florida 33069 ph.(954) 773-9714 fax (954) 971-6614