MIAMI-DADE COUNTY
DEPARTMENT OF REGULATORY AND ECONOMIC RESOURCES (RER)
BOARD AND CODE ADMINISTRATION DIVISION

MIAMI-DADE COUNTY
PRODUCT CONTROL SECTION
11805 SW 26 Street, Room 208
T (786) 315-2590 F (786) 315-2599
www.miamidade.gov/economy

NOTICE OF ACCEPTANCE (NOA)

Ready Access
1815 Arthur Drive
West Chicago, IL 60185

SCOPE:

This NOA is being issued under the applicable rules and regulations governing the use of construction materials. The documentation submitted has been reviewed and accepted by Miami-Dade County RER - Product Control Section to be used in Miami Dade County and other areas where allowed by the Authority Having Jurisdiction (AHJ).

This NOA shall not be valid after the expiration date stated below. The Miami–Dade County Product Control Section (In Miami–Dade County) and/or the AHJ (in areas other than Miami–Dade County) reserve the right to have this product or material tested for quality assurance purposes. If this product or material fails to perform in the accepted manner, the manufacturer will incur the expense of such testing and the AHJ may immediately revoke, modify, or suspend the use of such product or material within their jurisdiction. RER reserves the right to revoke this acceptance, if it is determined by Miami–Dade County Product Control Section that this product or material fails to meet the requirements of the applicable building code.

This product is approved as described herein, and has been designed to comply with the Florida Building Code, including the High Velocity Hurricane Zone.-

DESCRIPTION: Series "Ready Access" Aluminum Drive-Through Window – N.I.

APPROVAL DOCUMENT: Drawing No. **S-2553**, titled "Ready Access Drive Through Window 'Non-Impact'", sheets 1 through 10 of 10, dated 06/16/05, with revision #5 dated 02/29/16, prepared by RW Building Consultants, Inc., signed and sealed by Lyndon F. Schmidt, P.E., bearing the Miami-Dade County Product Control Revision stamp with the Notice of Acceptance number and expiration date by the Miami-Dade County Product Control Section.

MISSILE IMPACT RATING: None

LABELING: Each unit shall bear a permanent label with the manufacturer's name or logo, city, state, model/series, and following statement: "Miami-Dade County Product Control Approved", unless otherwise noted herein.

RENEWAL of this NOA shall be considered after a renewal application has been filed and there has been no change in the applicable building code negatively affecting the performance of this product.

TERMINATION of this NOA will occur after the expiration date or if there has been a revision or change in the materials, use, and/or manufacture of the product or process. Misuse of this NOA as an endorsement of any product, for sales, advertising or any other purposes shall automatically terminate this NOA. Failure to comply with any section of this NOA shall be cause for termination and removal of NOA.

ADVERTISEMENT: The NOA number preceded by the words Miami-Dade County, Florida, and followed by the expiration date may be displayed in advertising literature. If any portion of the NOA is displayed, then it shall be done in its entirety.

INSPECTION: A copy of this entire NOA shall be provided to the user by the manufacturer or its distributors and shall be available for inspection at the job site at the request of the Building Official.

This NOA **revises and renews NOA# 10-0224.02** and consists of this page 1 and evidence page E-1, as well as approval document mentioned above.

The submitted documentation was reviewed by **Manuel Perez, P.E.**

MIAMI-DADE COUNTY APPROVED

6/1/16

Ready Access

NOTICE OF ACCEPTANCE: EVIDENCE SUBMITTED

A. DRAWINGS

1. Manufacturer's die drawings and sections.
   (Submitted under NOA # 05-0719.04)
2. Drawing No. **S-2553**, titled "Ready Access Drive Through Window 'Non-Impact'", dated 06/16/05, with revision #5 dated 02/29/16, sheets 1 through 10 of 10, prepared by RW Building Consultants, Inc., signed and sealed by Lyndon F. Schmidt, P.E.

B. TESTS

1. Test reports on: 1) Air Infiltration Test, per FBC, TAS 202-94
   2) Uniform Static Air Pressure Test, Loading per FBC TAS 202-94
   3) Water Resistance Test, per FBC, TAS 202-94
   4) Forced Entry Test, per ASTM F588-04, TAS 202-94

   along with marked-up drawings and installation diagram of aluminum pass through window, prepared by American Test Lab, Inc. Test Report No. **ATLNC-1108.01-04R**, dated 11/08-11/04, and addendum letter dated 08/29/05, both signed and sealed by David Johnson, P.E.
   (Submitted under NOA # 05-0719.04)

C. CALCULATIONS

1. Anchor verification calculations and structural analysis, complying with **FBC-5th Edition (2014)**, dated 02/29/16, prepared by RW Building Consultants, Inc., signed and sealed by Lyndon F. Schmidt, P.E.
2. Glazing complies with **ASTM E1300-04**

D. QUALITY ASSURANCE

1. Miami-Dade Department of Regulatory and Economic Resources (RER).

E MATERIAL CERTIFICATIONS

1. None.

F. STATEMENTS

1. Statement letter of conformance, complying with **FBC-5th Edition (2014)**, and of no financial interest, dated February 29, 2016, issued by RW Building Consultants, Inc., signed and sealed by Lyndon F. Schmidt, P.E.

G. OTHER

1. Notice of Acceptance No. **10-0224.02**, issued to Ready Access for their Series Ready Access Aluminum Drive Through Window – N.I., approved on 05/05/10 and expiring on 02/16/16.

Manuel Perez, P.E.
Product Control Examiner
NOA No. 16-0307.07
Expiration Date: February 16, 2021
Approval Date: June 09, 2016

READY ACCESS®
1815 Arthur Drive ▪ West Chicago, Illinois 60185 ▪ 800-621-5045 ▪ 630-876-7766 ▪ Fax 630-876-7767

READY ACCESS DRIVE THROUGH WINDOW "NON-IMPACT"

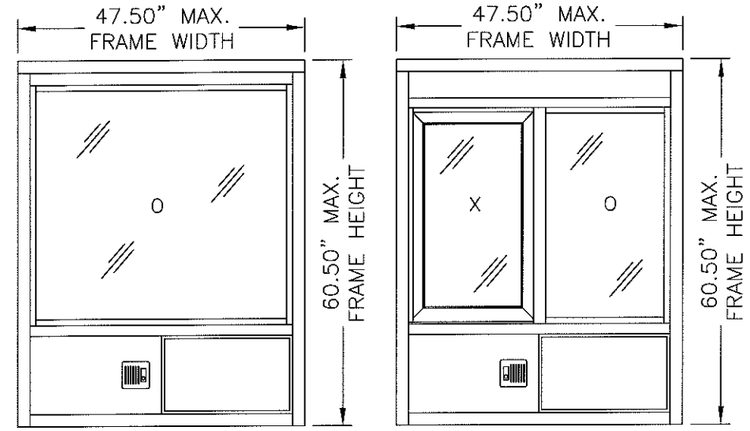

604 SERIES WINDOW

602 SERIES WINDOW

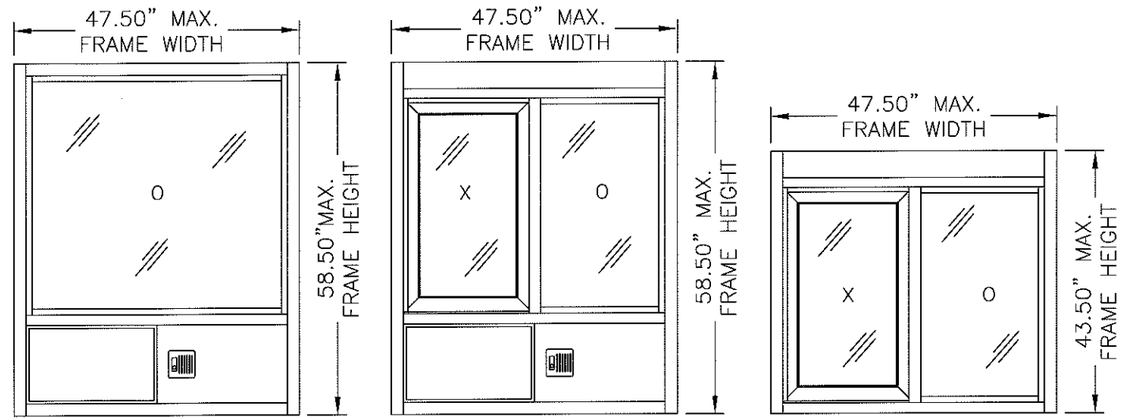

603 SERIES WINDOW

601 SERIES WINDOW

600 SERIES WINDOW

GENERAL NOTES

1. THIS PRODUCT HAS BEEN EVALUATED AND IS IN COMPLIANCE WITH THE 5TH EDITION (2014) FLORIDA BUILDING CODE (FBC) INCLUDING THE "HIGH VELOCITY HURRICANE ZONE" (HVHZ).
2. PRODUCT ANCHORS SHALL BE AS LISTED AND SPACED AS SHOWN ON DETAILS. ANCHOR EMBEDMENT TO BASE MATERIAL SHALL BE BEYOND WALL DRESSING OR STUCCO.
3. WHEN USED IN THE "HVHZ", THIS PRODUCT IS REQUIRED TO BE PROTECTED WITH AN IMPACT RESISTANT COVERING THAT COMPLIES WITH SECTION 1626 OF THE FBC.
4. FOR 2X STUD FRAMING CONSTRUCTION, THE ANCHORING OF THESE UNITS SHALL BE THE SAME AS THAT SHOWN FOR 2X BUCK MASONRY CONSTRUCTION.
5. CONDITIONS NOT COVERED BY THIS DRAWING ARE SUBJECT TO FURTHER ENGINEERING ANALYSIS.
6. WOOD BUCKS BY OTHERS, MUST BE ANCHORED PROPERLY TO TRANSFER LOADS TO STRUCTURE AND TO BE REVIEWED BY BUILDING OFFICIAL.
7. FOR DESIGN PRESSURE RATING SEE CHART THIS SHEET.
8. THIS PRODUCT MEETS THE WATER REQUIREMENTS FOR HIGH VELOCITY HURRICANE ZONES.

TABLE OF CONTENTS

SHEET #	DESCRIPTION
1	TYPICAL ELEVATIONS, DESIGN PRESSURE & GENERAL NOTES
2	600 SERIES WINDOW SECTIONS & DETAILS
3	601 SERIES WINDOW SECTIONS & DETAILS
4	602 SERIES WINDOW SECTIONS & DETAILS
5	603 SERIES WINDOW SECTIONS & DETAILS
6	604 SERIES WINDOW SECTIONS & DETAILS
7	ANCHORING WITH SHEET METAL SCREWS
8	ANCHORING WITH WOOD OR CONCRETE SCREWS
9	COMPONENTS
10	BILL OF MATERIALS, COMPONENTS & GLAZING DETAILS

MODEL	OVERALL FRAME DIMENSION	OVERALL DAYLIGHT DIMENSION	GLASS TYPE	DESIGN PRESSURE RATINGS (PSF)			
				WHEN WATER INFILTRATION REQ'D		WHEN WATER INFILTRATION NOT REQ'D	
600	47.50" X 43.50"	(O) 19.62" X 33.78" (X) 16.14" X 30.18"	1/4" TEMP.	+41.6	−41.6	+75.0	−75.0
601	47.50" X 58.50"	(O) 19.62" X 33.78" (X) 16.14" X 30.18"		+41.6	−41.6	+75.0	−75.0
602	47.50" X 60.50"	(O) 19.62" X 33.78" (X) 16.14" X 30.18"	—AIR—	+41.6	−41.6	+75.0	−75.0
603	47.50" X 58.50"	(O) 41.49" X 37.78"	1/4" TEMP.	+41.6	−41.6	+75.0	−75.0
604	47.50" X 60.50"	(O) 41.49" X 37.78"		+41.6	−41.6	+75.0	−75.0

PRODUCT REVISED as complying with the Florida Building Code Acceptance No. 16-0307.07 Expiration Date Feb. 16, 2021
By Miami Dade Product Control

STATE OF FLORIDA PROFESSIONAL ENGINEER LYNDON F. SCHMIDT LICENSE No. 43409 3.1.16

Documents Prepared By:
Lyndon F. Schmidt
P.E. No. 43409
RW BUILDING CONSULTANTS, INC.
P.O. Box 230, Valrico, FL 33595
Phone No.: 813.659.9197
FBPE C.A. No. 9813

PRODUCT: READY ACCESS DRIVE THROUGH WINDOW "NON-IMPACT"

PART OR ASSEMBLY: TYPICAL ELEVATIONS, DESIGN PRESSURE & GENERAL NOTES

NO.	DATE	REVISIONS	BY
5	2/29/16	UPDATE TO 5TH ED. (2014) FBC	LFS

DATE: 06/16/05
SCALE: N.T.S.
DWG. BY: AEM
CHK. BY: LFS
DRAWING NO.: S-2553
SHEET 1 OF 10

© 2010 R.W. BUILDING CONSULTANTS INC.

R:\Clients\Ready Access Perm\DADE COUNTY\10-0224.02 RENEWAL-REVISION\S-2553.dwg, S-2553

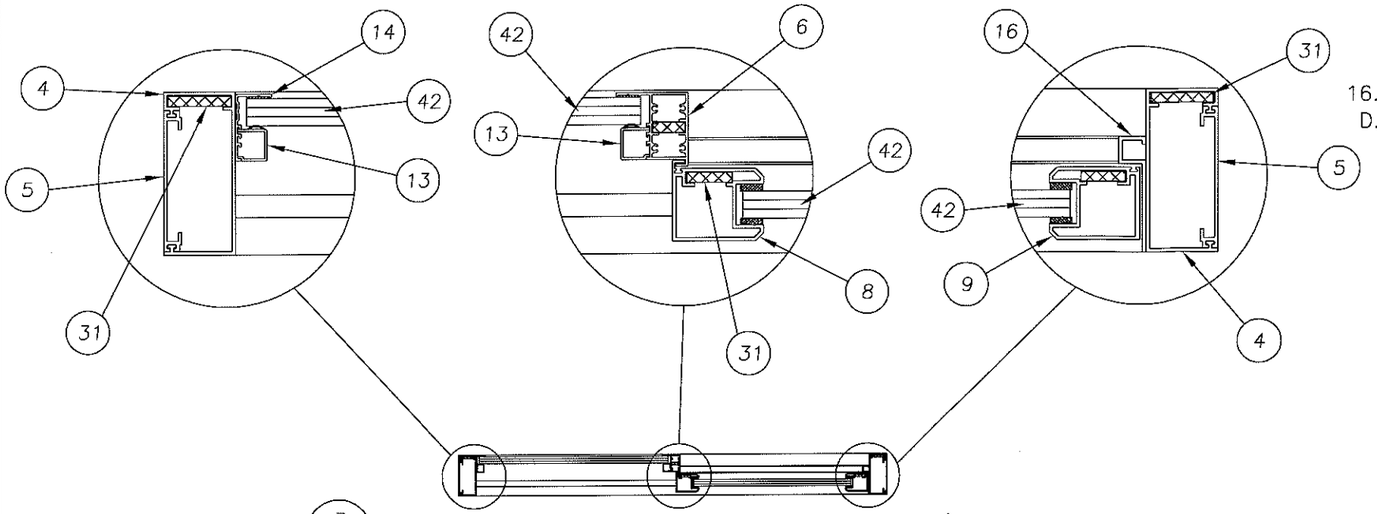

3/2

1/2 HORIZONTAL SECTION VIEW

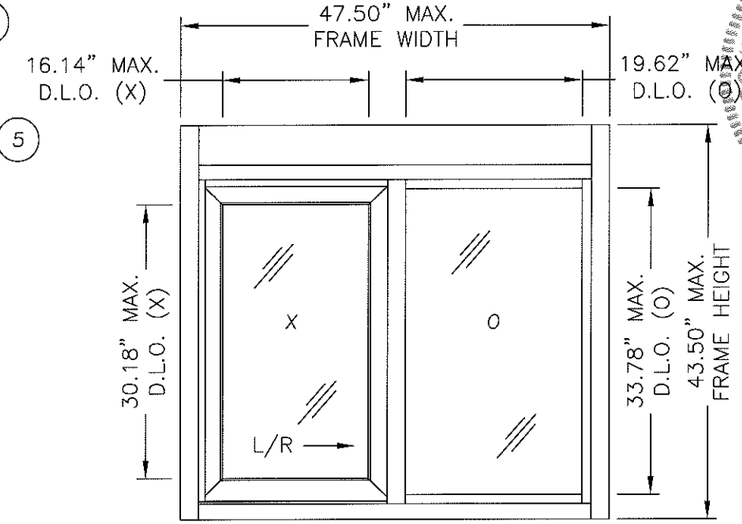

600 SERIES WINDOW

EXTERIOR VIEW

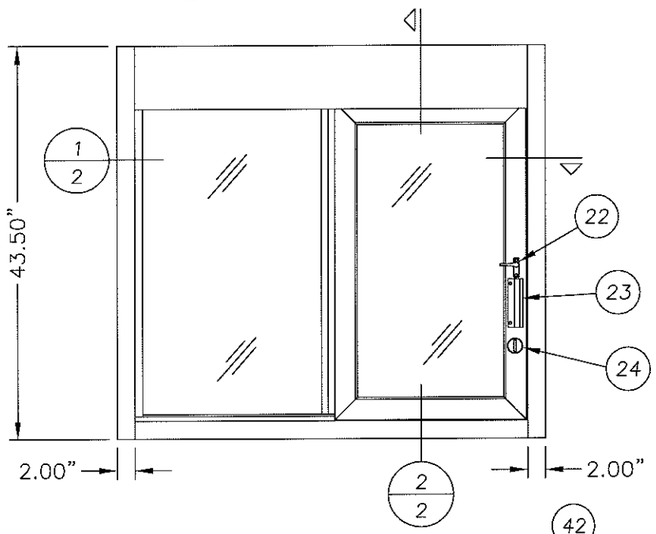

3/2 INTERIOR VIEW

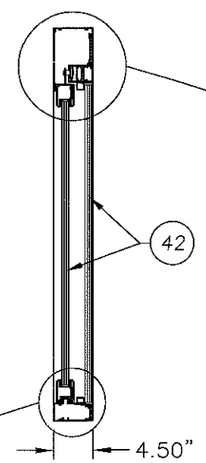

2/2 VERTICAL SECTION VIEW

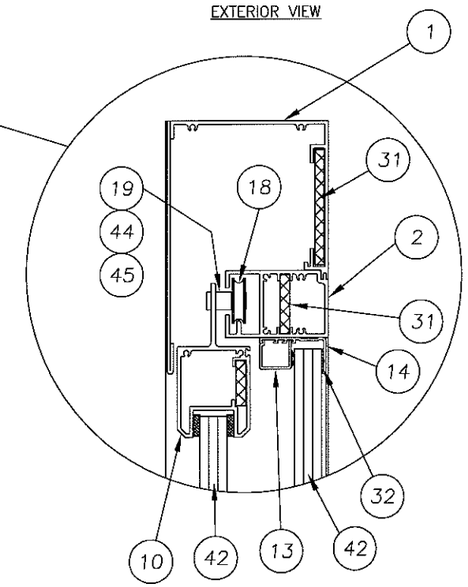

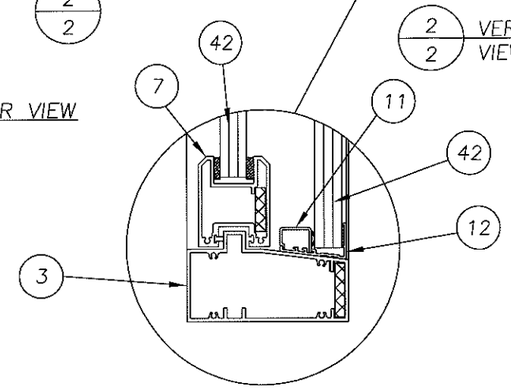

PRODUCT REVISED
complying with the Florida
Building Code
Acceptance No 16-0307.07
Expiration Date Feb 16, 2021
By Manuel Perez
Miami Dade Product Control

DATE:	06/16/05
SCALE:	N.T.S.
DWG. BY:	AEM
CHK. BY:	LFS
DRAWING NO.:	S-2553
SHEET	2 OF 10

PRODUCT: READY ACCESS DRIVE THROUGH WINDOW "NON-IMPACT"

PART OR ASSEMBLY: 600 SERIES WINDOW SECTIONS & DETAILS

REVISIONS

NO.	DATE		BY
5	2/29/16	UPDATE TO 5TH ED. (2014) FBC	LFS

Documents Prepared By:
Lyndon F. Schmidt
P.E. No. 43409

RW BUILDING CONSULTANTS, INC.
P.O. Box 230, Valrico, FL 33595
Phone No.: 813.659.9197
FBPE C.A. No. 9813

STATE OF FLORIDA PROFESSIONAL ENGINEER LYNDON F. SCHMIDT LICENSE No 43409

3-1-16

© 2010 R.W. BUILDING CONSULTANTS INC.

R:\Clients\Ready Access Perm\DADE COUNTY\10-0224.02 RENEWAL-REVISION\S-2553.dwg, 2

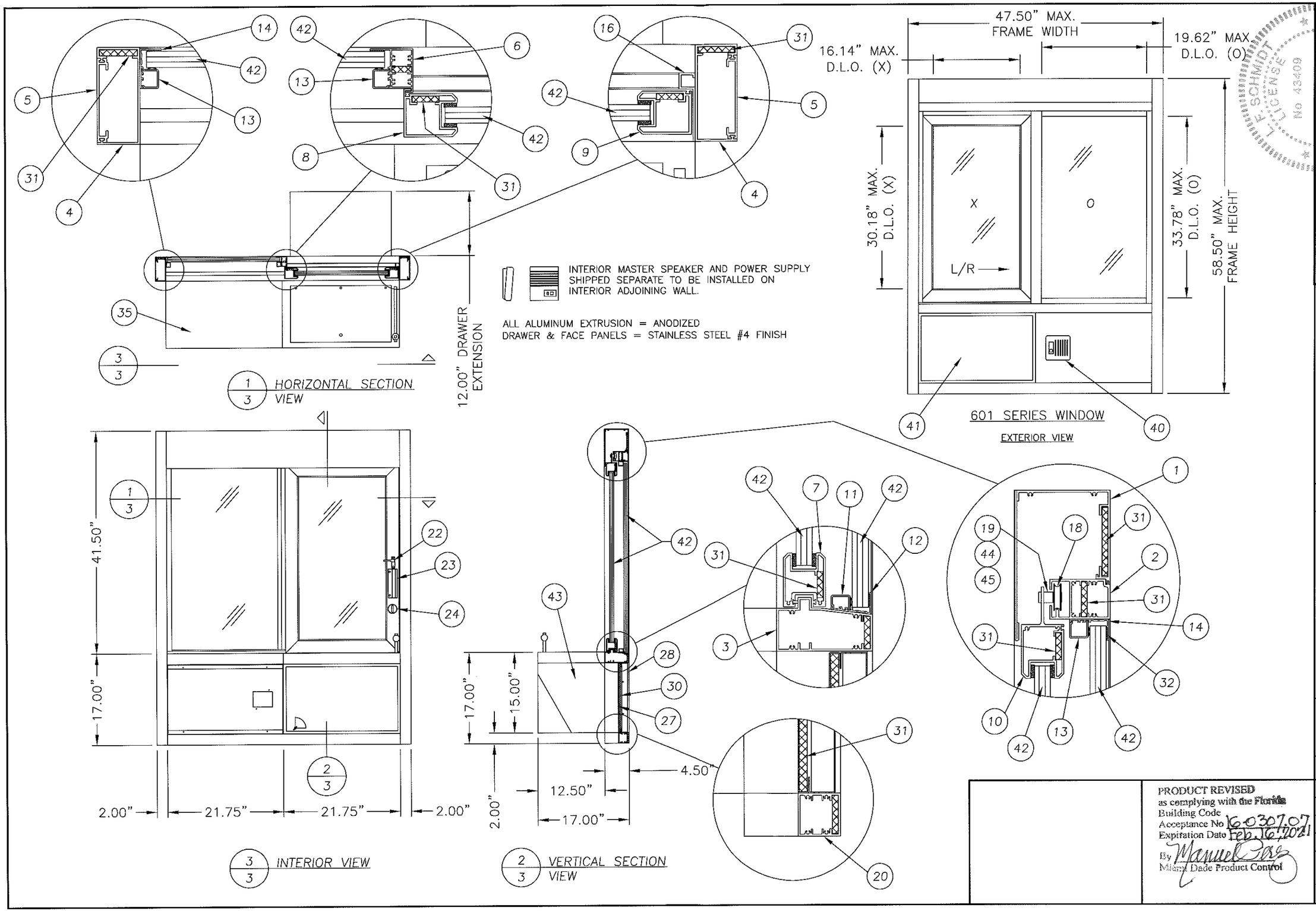

PRODUCT REVISED
as complying with the Florida Building Code
Acceptance No 16-0307.07
Expiration Date Feb. 16, 2021
By Manuel Saez
Miami Dade Product Control

Documents Prepared By:
Lyndon F. Schmidt
P.E. No. 43409

RW BUILDING CONSULTANTS, INC.
P.O. Box 230, Valrico, FL 33595
Phone No.: 813.659.9197
FBPE C.A. No. 9813

PRODUCT: READY ACCESS DRIVE THROUGH WINDOW "NON-IMPACT"

PART OR ASSEMBLY: 601 SERIES WINDOW SECTIONS & DETAILS

NO.	DATE	REVISIONS	BY
5	2/29/16	UPDATE TO 5TH ED. (2014) FBC	LFS

DATE: 06/16/05
SCALE: N.T.S.
DWG. BY: AEM
CHK. BY: LFS
DRAWING NO.: S-2553
SHEET 3 OF 10

© 2010 R.W. BUILDING CONSULTANTS INC.

R:\Clients\Ready Access Perm\DADE COUNTY\10-0224.02 RENEWAL-REVISION\S-2553.dwg, 3

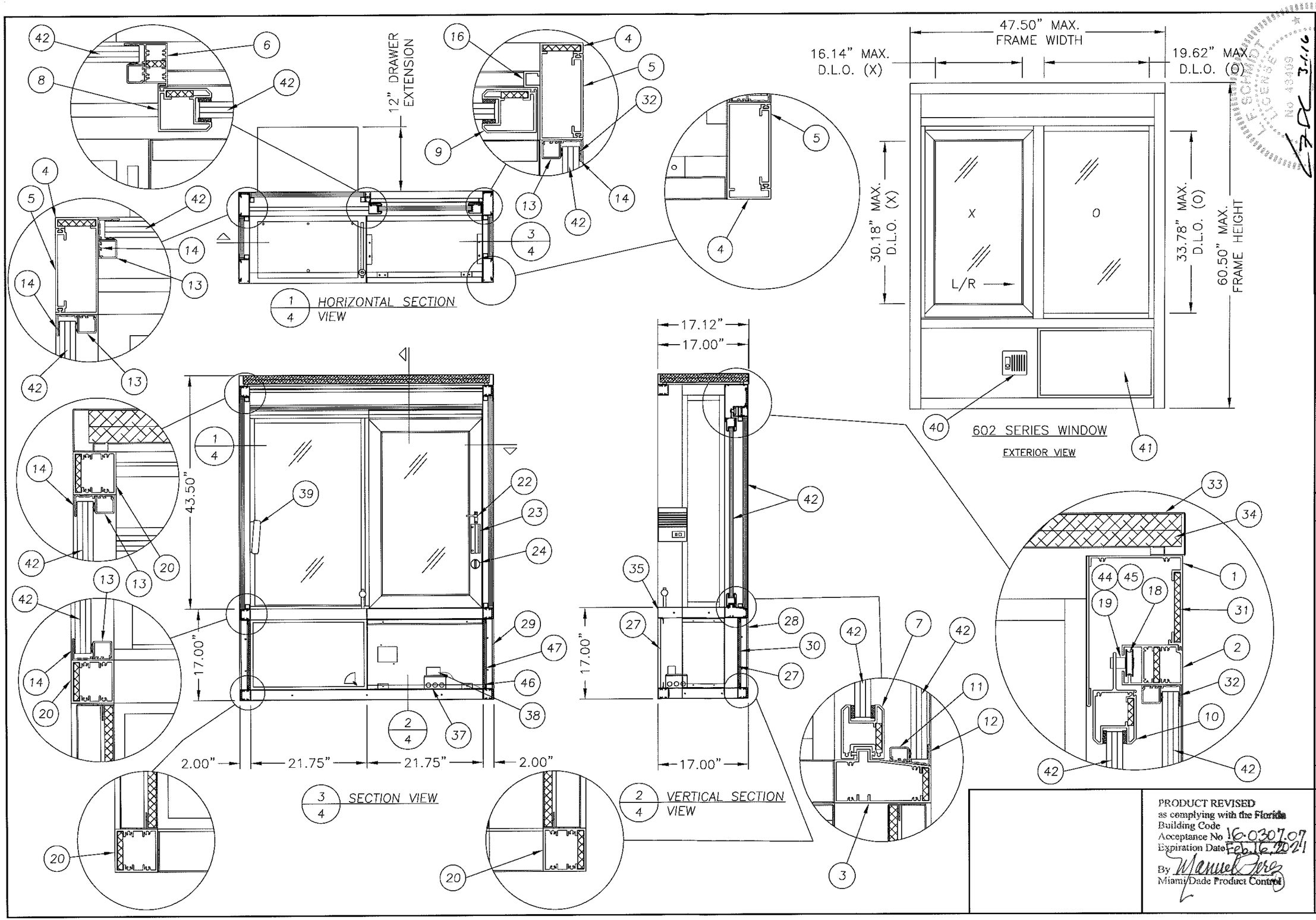

Documents Prepared By:
Lyndon F. Schmidt
P.E. No. 43409

R.W. BUILDING CONSULTANTS, INC.
P.O. Box 230, Valrico, FL 33595
Phone No.: 813.659.9197
FBPE C.A. No. 9813

PRODUCT: READY ACCESS DRIVE THROUGH WINDOW "NON-IMPACT"

PART OR ASSEMBLY: 602 SERIES WINDOW SECTIONS & DETAILS

NO.	DATE	REVISIONS	BY
5	2/29/16	UPDATE TO 5TH ED. (2014) FBC	LFS

PRODUCT REVISED
as complying with the Florida Building Code
Acceptance No 16-0307.07
Expiration Date Feb. 16, 2021
By Manuel Perez
Miami-Dade Product Control

DATE: 06/16/05
SCALE: N.T.S.
DWG. BY: AEM
CHK. BY: LFS
DRAWING NO.: S-2553
SHEET 4 OF 10

© 2010 R.W. BUILDING CONSULTANTS INC.

R:\Clients\Ready Access Perm\DADE COUNTY\10-0224.02 RENEWAL-REVISION\S-2553.dwg, 4

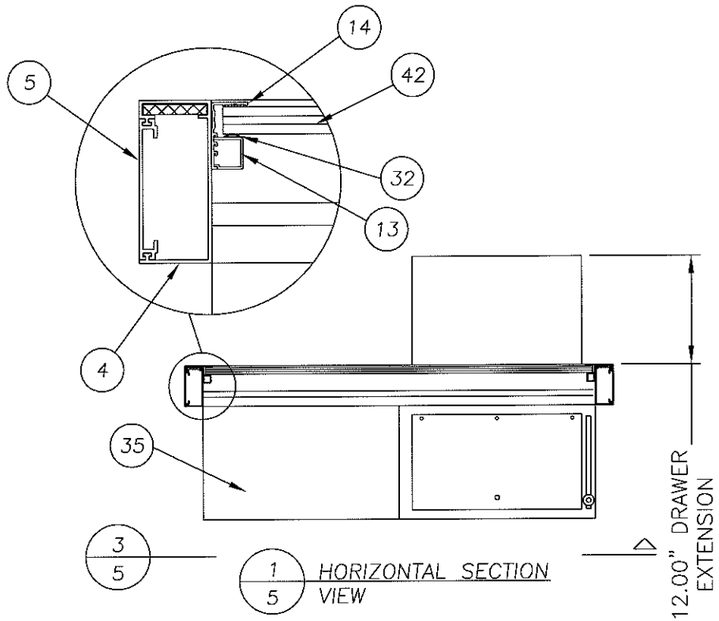

INTERIOR MASTER SPEAKER AND POWER SUPPLY SHIPPED SEPARATE TO BE INSTALLED ON INTERIOR ADJOINING WALL.

ALL ALUMINUM EXTRUSION = ANODIZED
DRAWER & FACE PANELS = STAINLESS STEEL #4 FINISH

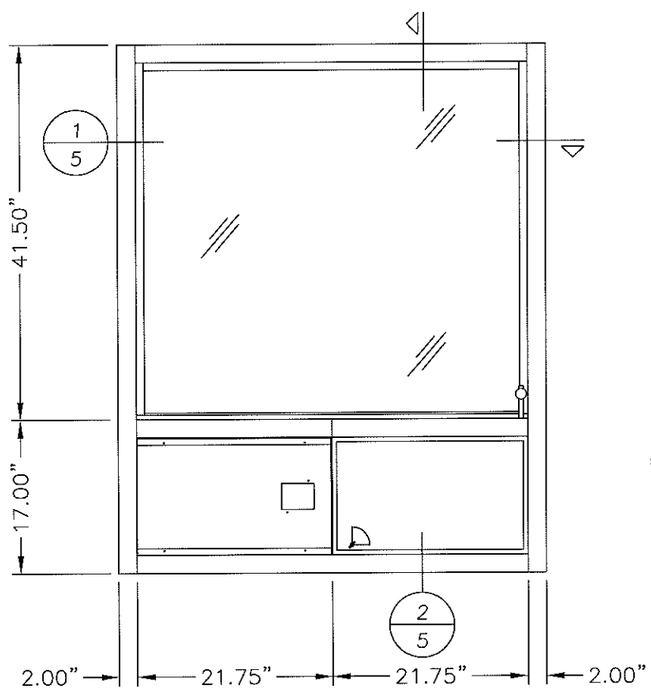

3/5 INTERIOR VIEW

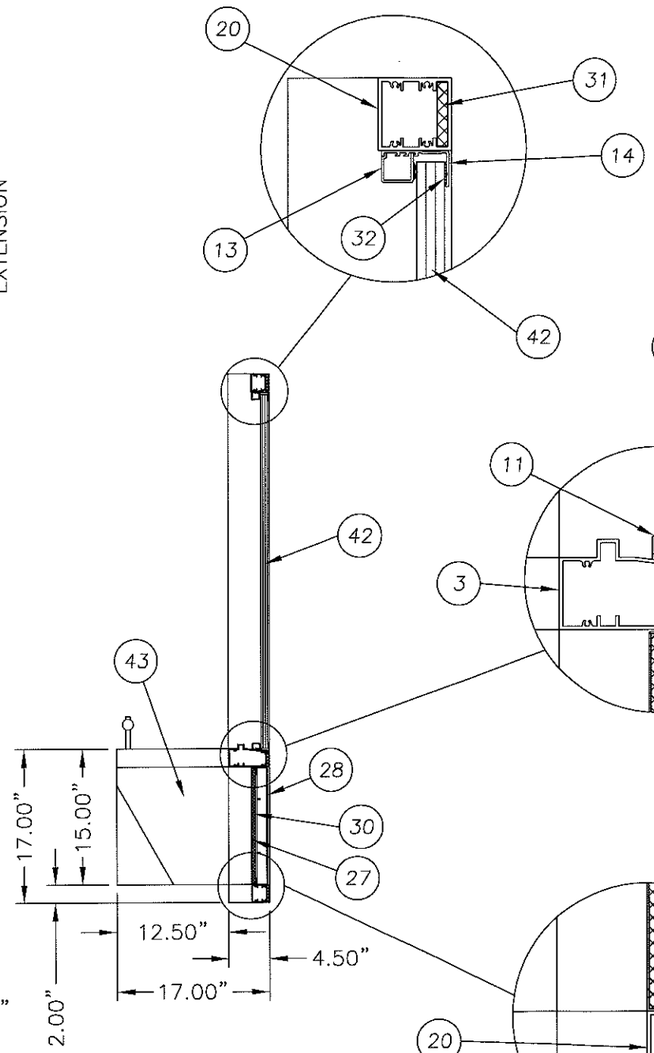

2/5 VERTICAL SECTION VIEW

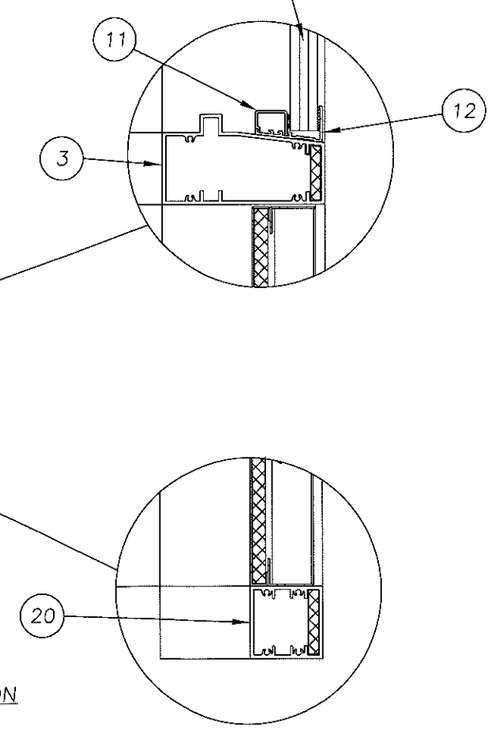

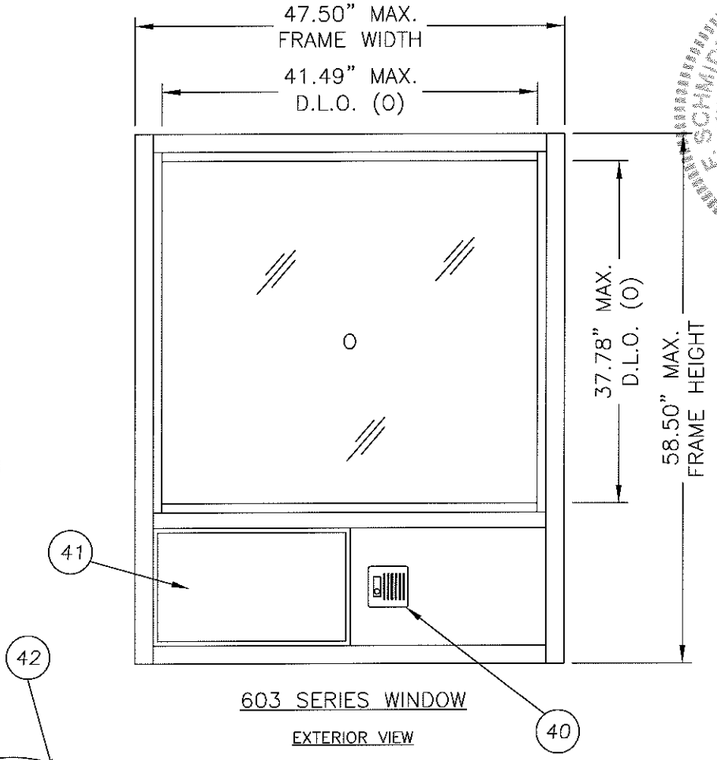

603 SERIES WINDOW

EXTERIOR VIEW

PRODUCT REVISED
as complying with the Florida Building Code
Acceptance No. 16-0307.07
Expiration Date Feb. 16, 2021
By Manuel Perez
Miami Dade Product Control

Documents Prepared By:
Lyndon F. Schmidt
P.E. No. 43409

R.W. BUILDING CONSULTANTS, INC.
P.O. Box 230, Valrico, FL 33595
Phone No.: 813.659.9197
FBPE C.A. No. 9813

LYNDON F. SCHMIDT LICENSE No 43409 STATE OF FLORIDA PROFESSIONAL ENGINEER
3-1-16

PRODUCT: READY ACCESS DRIVE THROUGH WINDOW "NON-IMPACT"

PART OR ASSEMBLY: 603 SERIES WINDOW SECTIONS & DETAILS

NO.	DATE	REVISIONS	BY
5	2/29/16	UPDATE TO 5TH ED. (2014) FBC	LFS

DATE: 06/16/05
SCALE: N.T.S.
DWG. BY: AEM
CHK. BY: LFS
DRAWING NO.: S-2553
SHEET 5 OF 10

© 2010 R.W. BUILDING CONSULTANTS INC.

R:\Clients\Ready Access Perm\DADE COUNTY\10-0224.02 RENEWAL-REVISION\S-2553.dwg, 5

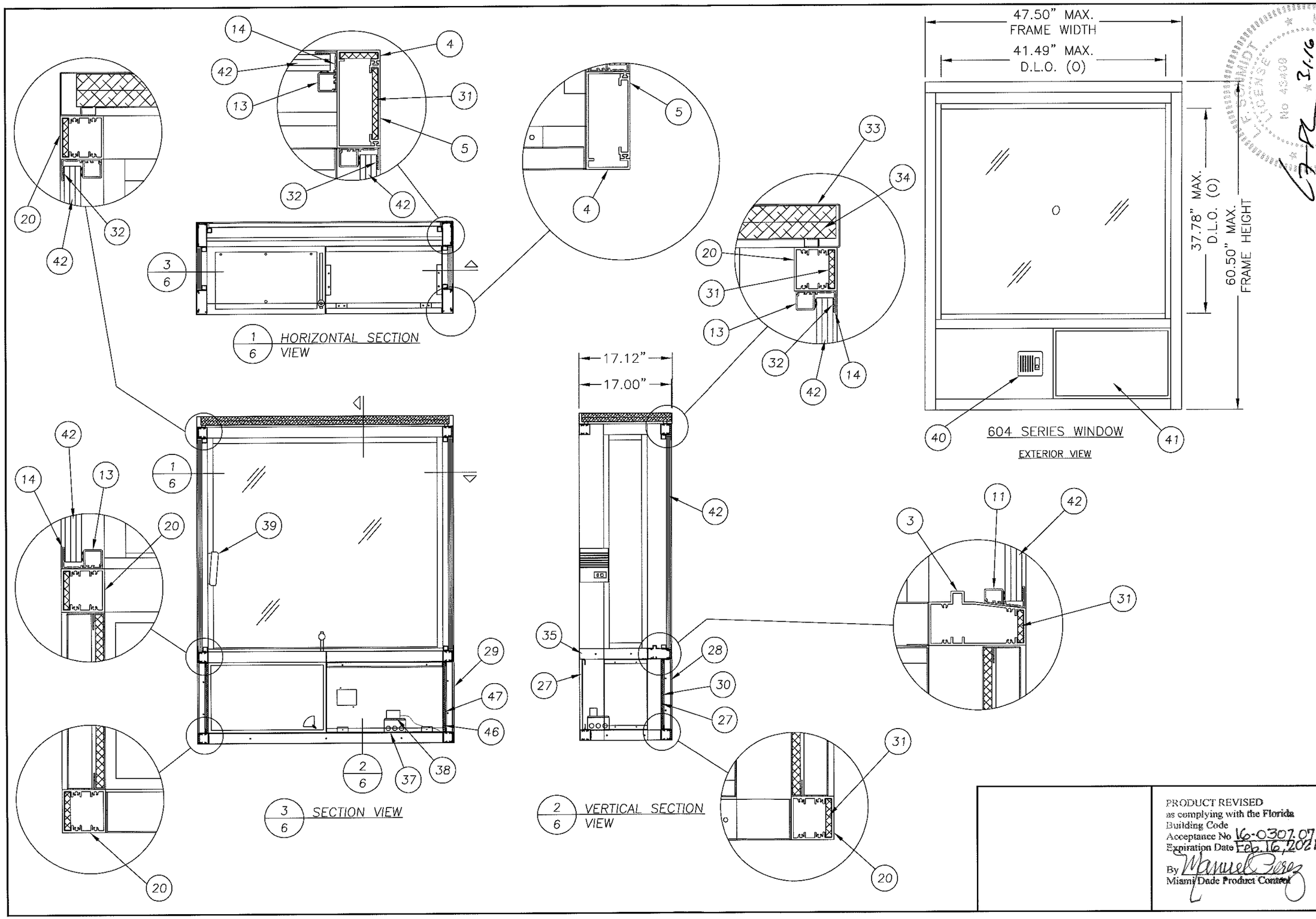

PRODUCT REVISED
as complying with the Florida
Building Code
Acceptance No 16-0307.07
Expiration Date Feb. 16, 2021
By Manuel Perez
Miami-Dade Product Control

Documents Prepared By:
Lyndon F. Schmidt
P.E. No. 43409

RW BUILDING CONSULTANTS, INC.
P.O. Box 230, Valrico, FL 33595
Phone No.: 813.659.9197
FBPE C.A. No. 9813

PRODUCT: READY ACCESS DRIVE THROUGH WINDOW "NON-IMPACT"

PART OR ASSEMBLY: 604 SERIES WINDOW SECTIONS & DETAILS

NO.	DATE	REVISIONS	BY
5	2/29/16	UPDATE TO 5TH ED. (2014) FBC	LFS

DATE: 06/16/05
SCALE: N.T.S.
DWG. BY: AEM
CHK. BY: LFS
DRAWING NO.: S-2553
SHEET 6 OF 10

© 2010 R.W. BUILDING CONSULTANTS INC.

R:\Clients\Ready Access Perm\DADE COUNTY\10-0224.02 RENEWAL-REVISION\S-2553.dwg, 6

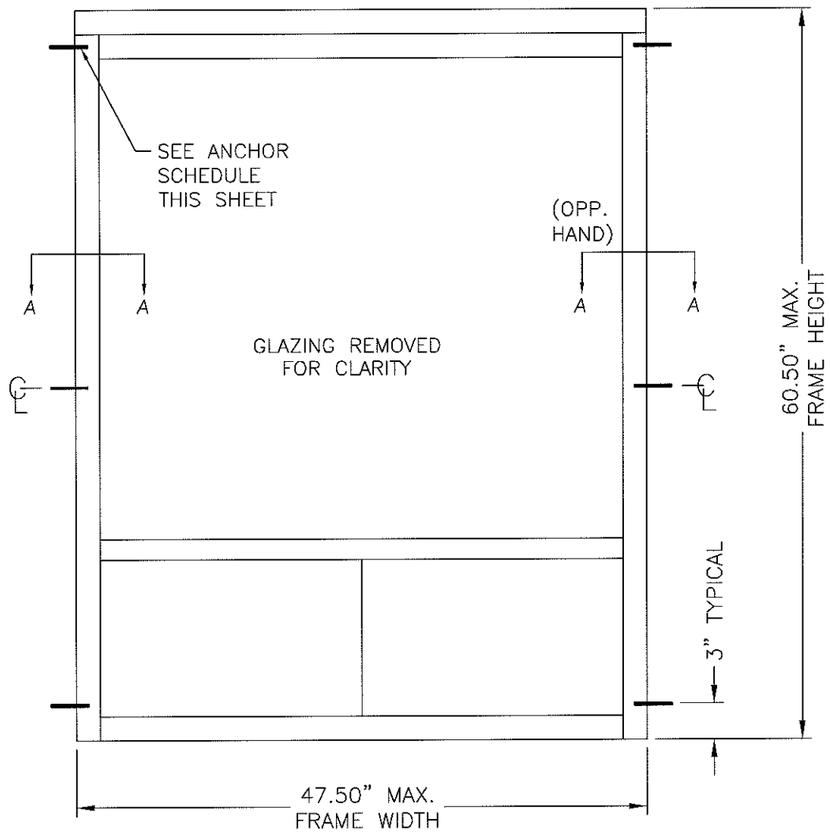

603 AND 604 SERIES WINDOW

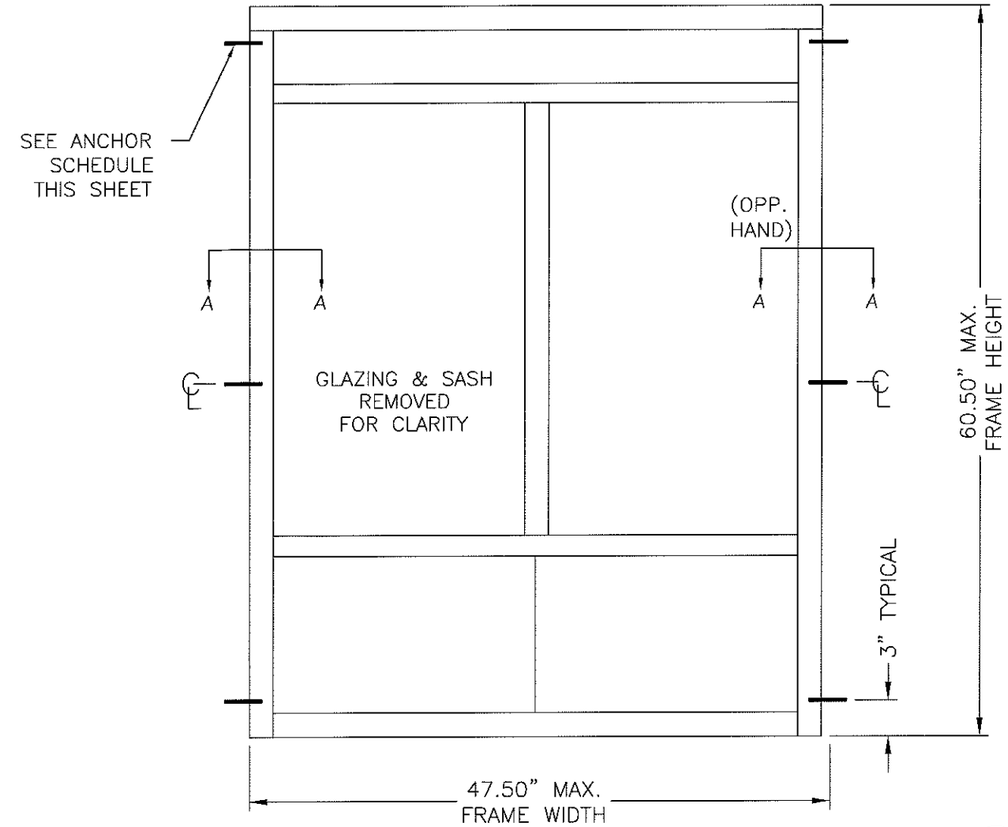

601 AND 602 SERIES WINDOW

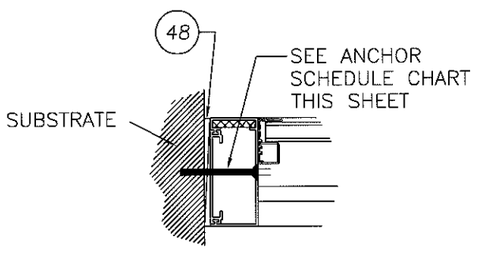

SECTION AA
FIXED WINDOW PANEL

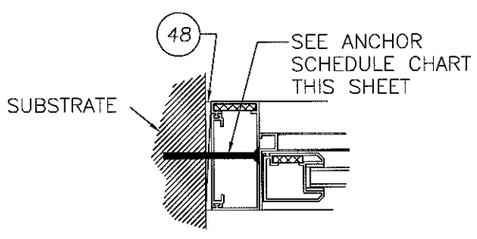

SECTION AA
ACTIVE WINDOW PANEL

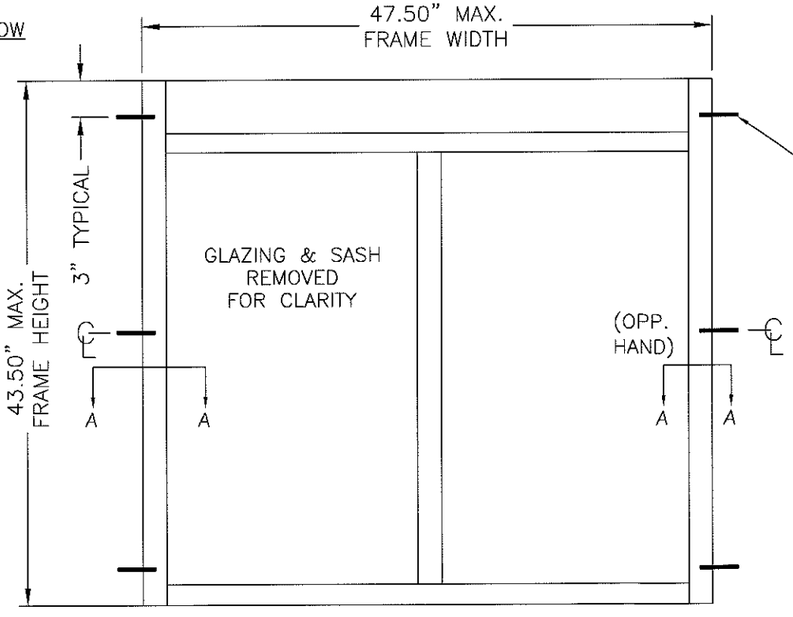

600 SERIES WINDOW

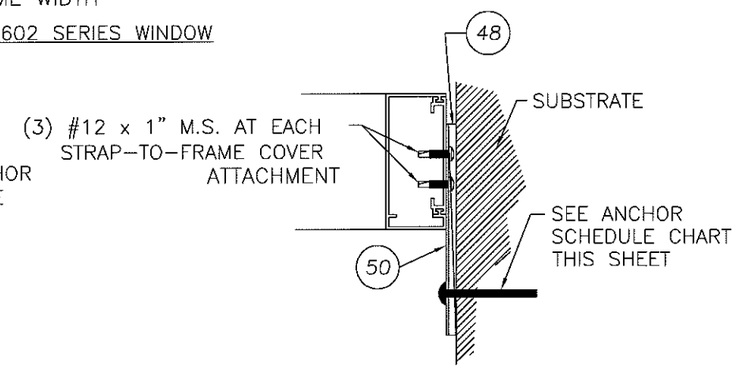

SECTION AA
USING MOUNTING STRAP

ANCHOR SCHEDULE	
SUBSTRATE	ANCHOR
STEEL: 16 GA. MIN. (ASTM A36, GRADE 33)	1/4-20 HILTI KWIK-FLEX SELF-DRILLING SHEET METAL SCREW (MIN. PROTRUSION OF 3 THREADS BEYOND FULL ENGAGEMENT)

PRODUCT REVISED
as complying with the Florida Building Code
Acceptance No 16-0307.07
Expiration Date Feb. 16, 2021
By Miami Dade Product Control

LYNDON F. SCHMIDT LICENSE No 43409 STATE OF FLORIDA PROFESSIONAL ENGINEER
3.1.16

Documents Prepared By:
Lyndon F. Schmidt
P.E. No. 43409

RW BUILDING CONSULTANTS, INC.
P.O. Box 230, Valrico, FL 33595
Phone No.: 813.659.9197
FBPE C.A. No. 9813

PRODUCT: READY ACCESS DRIVE THROUGH WINDOW "NON-IMPACT"

PART OR ASSEMBLY: ANCHORING WITH SHEET METAL SCREWS

NO.	DATE	REVISIONS	BY
5	2/29/16	UPDATE TO 5TH ED. (2014) FBC	LFS

DATE: 06/16/05
SCALE: N.T.S.
DWG. BY: AEM
CHK. BY: LFS
DRAWING NO.: S-2553
SHEET 7 OF 10

© 2010 R.W. BUILDING CONSULTANTS INC.

R:\Clients\Ready Access Perm\DADE COUNTY\10-0224.02 RENEWAL-REVISION\S-2553.dwg, 7

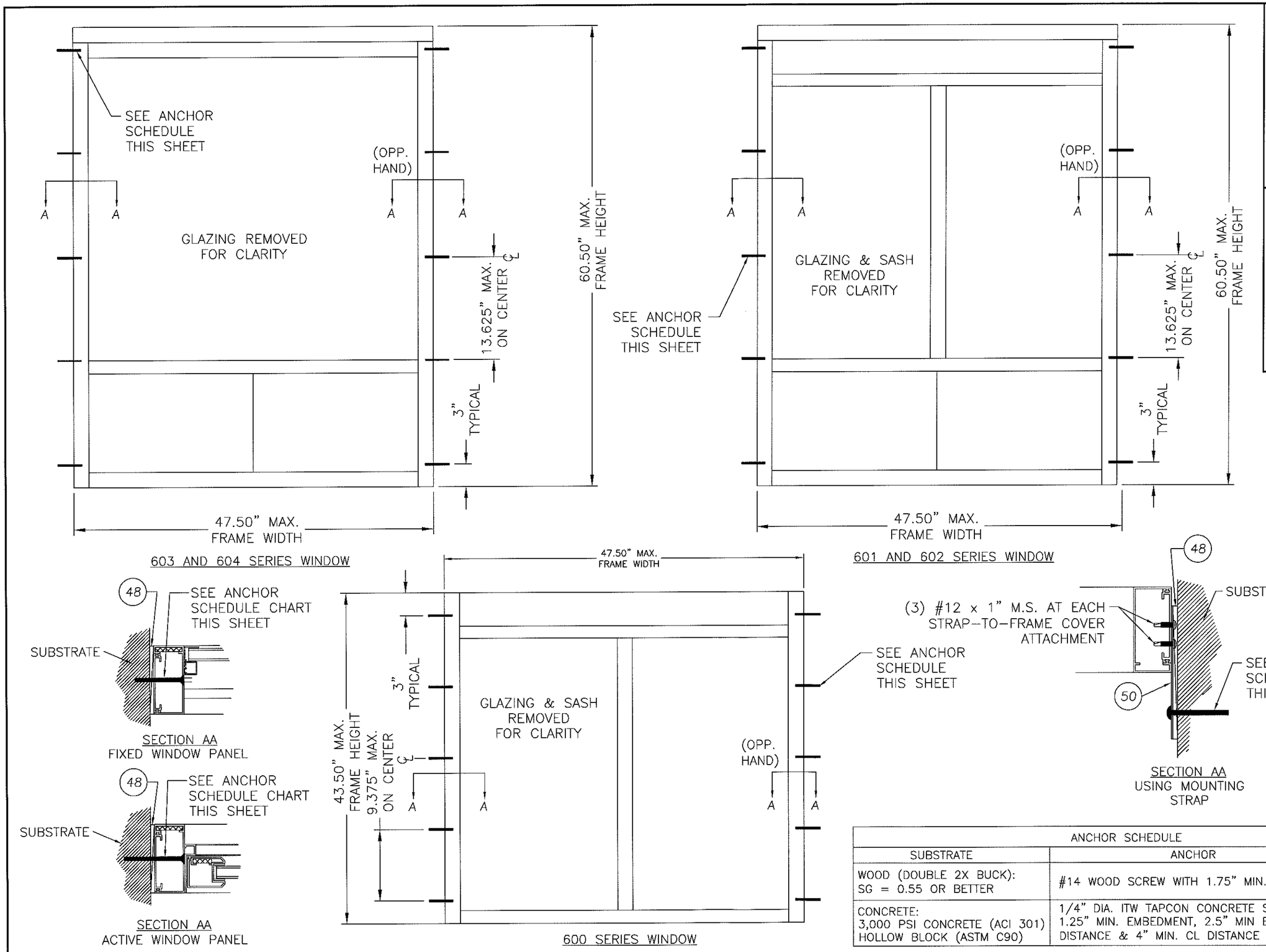

603 AND 604 SERIES WINDOW

601 AND 602 SERIES WINDOW

SECTION AA
FIXED WINDOW PANEL

SECTION AA
ACTIVE WINDOW PANEL

600 SERIES WINDOW

SECTION AA
USING MOUNTING STRAP

ANCHOR SCHEDULE	
SUBSTRATE	ANCHOR
WOOD (DOUBLE 2X BUCK): SG = 0.55 OR BETTER	#14 WOOD SCREW WITH 1.75" MIN. EMBEDMENT
CONCRETE: 3,000 PSI CONCRETE (ACI 301) HOLLOW BLOCK (ASTM C90)	1/4" DIA. ITW TAPCON CONCRETE SCREW WITH 1.25" MIN. EMBEDMENT, 2.5" MIN EDGE DISTANCE & 4" MIN. CL DISTANCE

PRODUCT REVISED as complying with the Florida Building Code Acceptance No. 16-0307.07 Expiration Date Feb 16, 2021 By Miami Dade Product Control

L. F. SCHMIDT LICENSE No 43409 STATE OF FLORIDA PROFESSIONAL ENGINEER 3.1.16

Documents Prepared By:
Lyndon F. Schmidt
P.E. No. 43409
RW BUILDING CONSULTANTS, INC.
P.O. Box 230, Valrico, FL 33595
Phone No.: 813.659.9197
FBPE C.A. No. 9813

PRODUCT: READY ACCESS DRIVE THROUGH WINDOW "NON-IMPACT"

PART OR ASSEMBLY: ANCHORING WITH WOOD OR CONCRETE SCREWS

NO.	DATE	REVISIONS	BY
5	2/29/16	UPDATE TO 5TH ED. (2014) FBC	LFS

DATE: 06/16/05
SCALE: N.T.S.
DWG. BY: AEM
CHK. BY: LFS
DRAWING NO.: S-2553
SHEET 8 OF 10

© 2010 R.W. BUILDING CONSULTANTS INC.

R:\Clients\Ready Access Perm\DADE COUNTY\10-0224.02 RENEWAL-REVISION\S-2553.dwg, 8

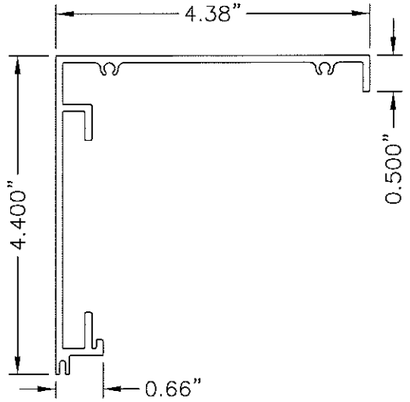

1 HEADER
PART# 64259029
ALUM. 6063-T6
MOUNT TO POST WITH
(4) #8 x 1" M.S. EACH END

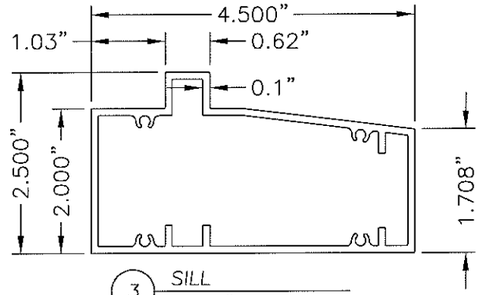

3 SILL
PART# 64259027
ALUM. 6063-T6
MOUNT TO POST WITH
(3) #8 x 1" M.S. EACH END

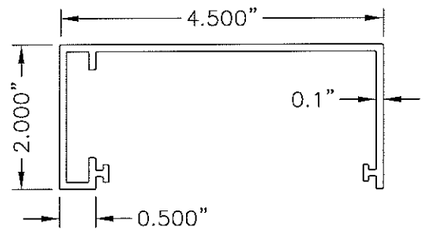

4 POST
PART# 64259019
ALUM. 6063-T6

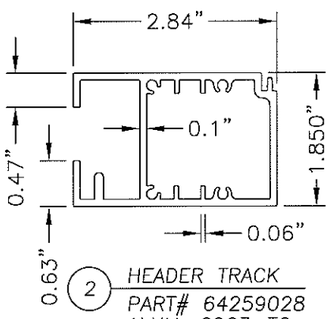

2 HEADER TRACK
PART# 64259028
ALUM. 6063-T6
ATTACH TO POSTS WITH
(4) #8 x 1" M.S. EACH END

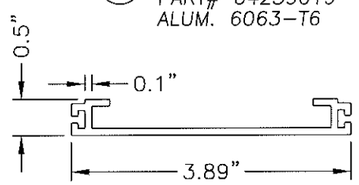

5 POST COVER
PART# 64259018 – ALUM. 6063-T6
ATTACH TO HEADER WITH (4) #8 x 1" M.S. EACH SIDE
ATTACHED TO SILL WITH (6) #8 x 1" M.S. EACH SIDE

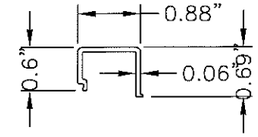

11 BOTTOM GLASS
RETAINER 3/4"
PART# 64259025
ALUM. 6063-T6

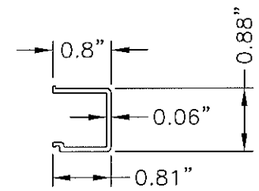

13 GLASS
RETAINER 3/4"
PART# 64259024
ALUM. 6063-T6

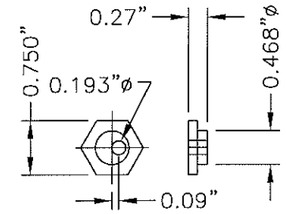

17 CAM DOOR ADJUSTMENT
PART# 20010030
COLD DRWN. STEEL
ZINC. DICHORMATE

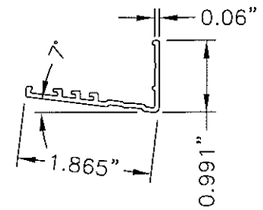

12 BOTTOM GLASS
CHANNEL 3/4"
PART# 64259023
ALUM. 6063-T6

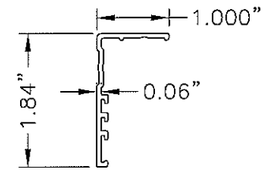

14 GLASS
CHANNEL 3/4"
PART# 64259022
ALUM. 6063-T6

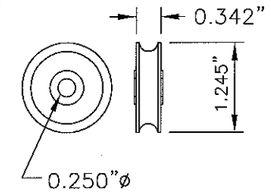

18 ROLLER
BEARING
PART# 20010030

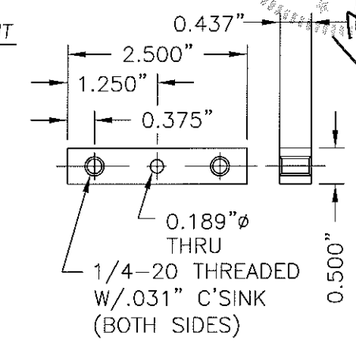

19 ROLLER MOUNTING BLOCK
.500 BAR STOCK
PART# 20220001
ALUM. 2024-T351

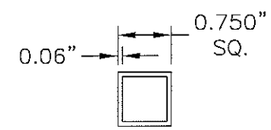

15 TOP WEATHER GUARD
PART# 64419003
ALUM. 6063-T6

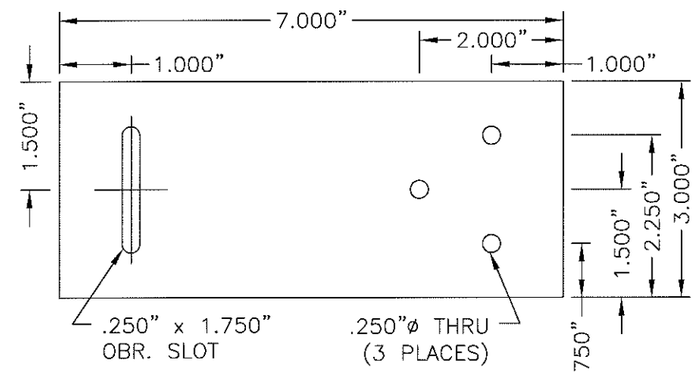

50 MOUNTING STRAP
PART# 66123500
14 GA. GALV. STEEL
ATTACH TO POST COVER
WITH (3) #12 x 1" SELF
DRILLING M.S.

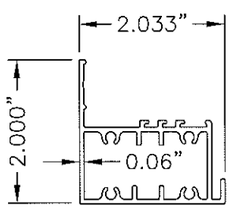

6 CENTER POST
PART# 64259021
ALUM. 6063-T6
ATTACH TO HEAD &
SILL WITH (4) #8 x 1"
PFH M.S. EACH END

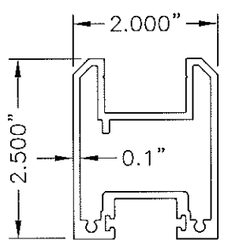

7 DOOR BOTTOM
PART# 64259032
ALUM. 6063-T6
ATTACH TO DOOR LOCK
& DOOR CENTER WITH (2)
#8 x 1" M.S. EACH END

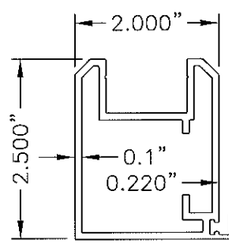

8 DOOR CENTER
PART# 64259031
ALUM. 6063-T6

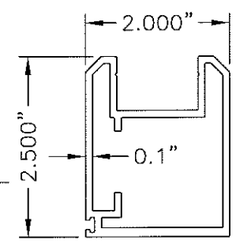

9 DOOR LOCK
PART# 64259030
ALUM. 6063-T6

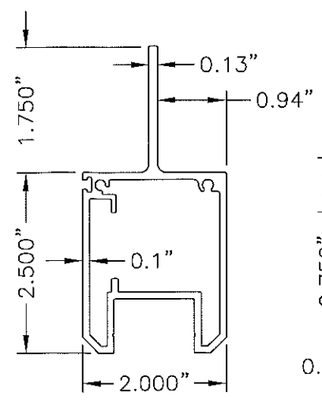

10 DOOR TOP
PART# 64259033
ALUM. 6063-T6
ATTACH TO DOOR LOCK
& DOOR CENTER WITH (2)
#8 x 1" M.S. EACH END

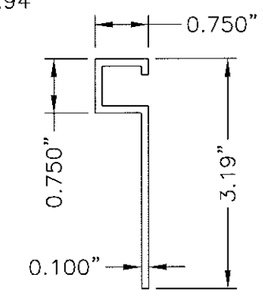

16 WEATHER GUARD
PART# 64259020
ALUM. 6063-T6

PRODUCT REVISED
as complying with the Florida
Building Code
Acceptance No 16-0307.07
Expiration Date Feb. 16, 2021
By
Miami Dade Product Control

NO.	DATE					BY
5	2/29/16	UPDATE TO 5TH ED. (2014)	FBC			LFS

REVISIONS

PRODUCT: READY ACCESS DRIVE THROUGH WINDOW "NON-IMPACT"

PART OR ASSEMBLY: COMPONENTS

DATE: 06/16/05
SCALE: N.T.S.
DWG. BY: AEM
CHK. BY: LFS
DRAWING NO.: S-2553
SHEET 9 OF 10

Documents Prepared By:
Lyndon F. Schmidt
P.E. No. 43409
R.W. BUILDING CONSULTANTS, INC.
P.O. Box 230, Valrico, FL 33595
Phone No.: 813.659.9197
FBPE C.A. No. 9813

© 2010 R.W. Building Consultants Inc.

R:\Clients\Ready Access Perm\DADE COUNTY\10-0224.02 RENEWAL-REVISIONS\S-2553.dwg, 9

ITEM	DESCRIPTION	MATERIAL
1	HEADER PART# 64259029 ALUM. 6063–T6	ALUM.
2	HEADER TRACK PART# 64259028 ALUM. 6063–T6	ALUM.
3	SILL PART# 64259027 ALUM. 6063–T6	ALUM.
4	POST PART# 64259019 ALUM. 6063–T6	ALUM.
5	POST COVER PART# 64259018 ALUM. 6063–T6	ALUM.
6	CENTER POST PART# 64259021 ALUM. 6063–T6	ALUM.
7	DOOR BOTTOM PART# 64259032 ALUM. 6063–T6	ALUM.
8	DOOR CENTER PART# 64259031 ALUM. 6063–T6	ALUM.
9	DOOR LOCK PART# 64259030 ALUM. 6063–T6	ALUM.
10	DOOR TOP PART# 64259033 ALUM. 6063–T6	ALUM.
11	GLASS RETAINER (3/4") PART# 64259025 ALUM. 6063–T6	ALUM.
12	BOTTOM GLASS CHANNEL (3/4") PART# 64259023 ALUM. 6063–T6	ALUM.
13	GLASS RETAINER (3/4") PART# 64259024 ALUM. 6063–T6	ALUM.
14	GLASS CHANNEL (3/4") PART# 64259022 ALUM. 6063–T6	ALUM.
15	TOP WEATHER GUARD PART# 64419003 ALUM. 6063–T6	ALUM.
16	WEATHER GUARD PART# 64259020 ALUM. 6063–T6	ALUM.
17	CAM DOOR ADJUSTMENT PART# 00651433 STEEL ZINC.	STEEL
18	ROLLER TRACK BEARING PART# 20010030 (SAE S2100)	STEEL
19	ROLLER MOUNTING BLOCK PART# 20220001 ALUM. 2024–T351	TPS
20	CROSS FRAME PART# 64259025 ALUM. 6063–T6	ALUM.
21	SILICONE GLAZING SEALANT DOW 999–A PART# 80050020	SILICONE
22	SELF–LATCHING THUMB TURN PART# 20090081	STEEL
23	PULL HANDLE PART# 65103300	STEEL
24	THUMB TURN DEADBOLT PART# 20090086	STEEL
25	GLAZING FOAM TAPE PART# 20200166	BUTYL
26	RUBBER SEAL "D" SHAPED PART# 40040004	EPDM
27	INSIDE FACE PANEL PART# 66121200 (18 ga 304 Stainless)	ST. ST'L
28	OUTSIDE FRONT FACE PANEL PART# 56121100 (18 ga 304 Stainless)	ST. ST'L
29	OUTSIDE SIDE FACE PANEL PART# 66120900 (18 ga 304 Stainless)	ST. ST'L
30	ARMOR PANEL (LUMAGARD 0.420" THK AG300)	COMPOSITE
31	ARMOR STRIP (LUMAGARD 0.420" THK AG300)	COMPOSITE
32	GLAZING TAPE 1/2" X .063" PART# 202001155	BUTYL
33	TOP CAP PART# 6122500 (18 ga 304 Stainless)	ST. ST'L
34	INSULATION PANEL (CEILING TILE, 5/8" THK)	CELLULOUS
35	COUNTER PART# 96120500	ST. ST'L
36	NOT USED	–
37	4X4 GANG BOX	–
38	SPEAKER POWER SUPPLY	–
39	INSIDE MASTER SPEAKER	–
40	OUTSIDE SPEAKER W/HOOKUP WIRE PRE INSTALLED PART# 20110021	–
41	PASS– THRU DRAWER PART# 96130000	–
42	3/4" INSULATED GLASS 1/4" TEMP. – AIR – 1/4" TEMP.	GLASS
43	ANGLED SHELF BRACKET (18 ga 304 Stainless)	ST. ST'L
44	ROLLER MTG. BOLT 1/4"–20 X 3/4" HEX HEAD MS (GRADE 5)	STEEL
45	ROLLER MTG. NUT 1/4"–20 NYLON LOCKING NUT	NYLON
46	INSIDE FACE PANEL PART# 66122800 (18 ga 304 Stainless)	ST. ST'L
47	ARMOR PANEL PART# 66125400 (LUMGUARD 0.420" THK AG300)	COMPOSITE
48	SHIM 1/4" THK. MAX.	WOOD
49	INTERIOR INSIDE FACE PANEL PART# 66120900 (18 ga 304 Stainless)	ST. ST'L
50	MOUNTING STRAP (14 ga GALV STEEL)	STEEL

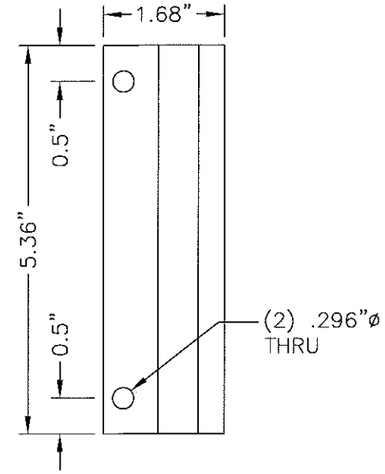

(23) PULL HANDLE
PART# 65103300

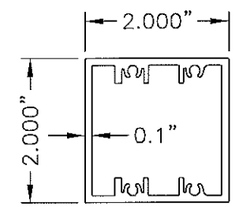

(20) CROSS FRAME
PART# 64259026
ALUM. 6063–T6
ATTACH TO POSTS WITH
WITH (4) #8 x 1" M.S.
EACH END

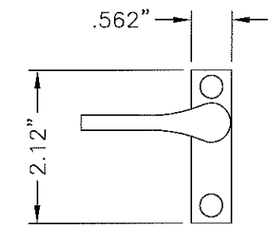

(22) SELF–LATCHING
THUMB TURN
ADAMS–RITE
PART# 20090081

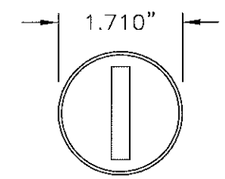

(24) THUMB TURN
DEADBOLT
PART# 20090086

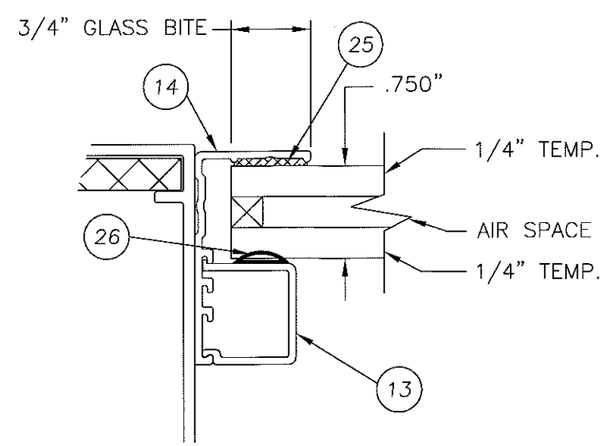

FRAME GLAZING DETAIL

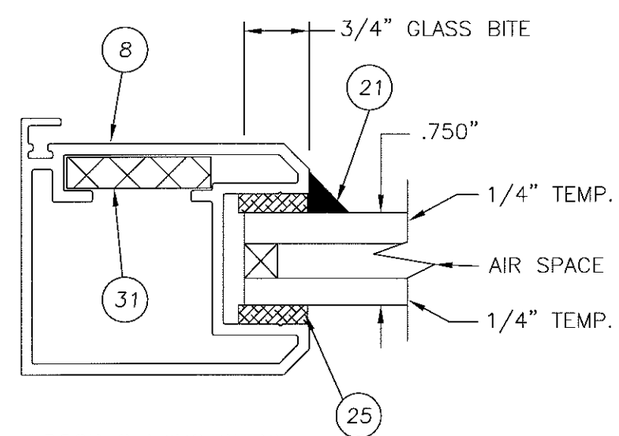

DOOR GLAZING DETAIL

PRODUCT REVISED as complying with the Florida Building Code
Acceptance No. 16-0307.07
Expiration Date Feb 16, 2021
By Miami-Dade Product Control

L. F. SCHMIDT LICENSE No 43409 STATE OF FLORIDA PROFESSIONAL ENGINEER
3-1-16

Documents Prepared By:
Lyndon F. Schmidt
P.E. No. 43409

BUILDING CONSULTANTS, INC.
P.O. Box 230, Valrico, FL 33595
Phone No.: 813.659.9197
FBPE C.A. No. 9813

PRODUCT: READY ACCESS DRIVE THROUGH WINDOW "NON–IMPACT"

PART OR ASSEMBLY: BILL OF MATERIALS, COMPONENTS & GLAZING DETAILS

NO.	DATE	REVISIONS	BY
5	2/29/16	UPDATE TO 5TH ED. (2014) FBC	LFS

DATE: 06/16/05
SCALE: N.T.S.
DWG. BY: AEM
CHK. BY: LFS
DRAWING NO.: S–2553
SHEET 10 OF 10

© 2010 R.W. BUILDING CONSULTANTS INC.

R:\Clients\Ready Access Perm\DADE COUNTY\10-0224.02 RENEWAL-REVISION\S-2553.dwg, 10