MIAMI-DADE COUNTY
PRODUCT CONTROL SECTION
11805 SW 26 Street, Room 208
Miami, Florida 33175-2474
T (786) 315-2590 F (786) 315-2599
www.miamidade.gov/economy

DEPARTMENT OF REGULATORY AND ECONOMIC RESOURCES (RER)
BOARD AND CODE ADMINISTRATION DIVISION

NOTICE OF ACCEPTANCE (NOA)

Quad-Lock Building Systems, Ltd.
7398 132nd St.
Surrey, BC V3W 4W7

SCOPE:

This NOA is being issued under the applicable rules and regulations governing the use of construction materials. The documentation submitted has been reviewed and accepted by Miami-Dade County RER-Product Control Section to be used in Miami Dade County and other areas where allowed by the Authority Having Jurisdiction (AHJ).

This NOA shall not be valid after the expiration date stated below. The Miami-Dade County Product Control Section (In Miami Dade County) and/or the AHJ (in areas other than Miami Dade County) reserve the right to have this product or material tested for quality assurance purposes. If this product or material fails to perform in the accepted manner, the manufacturer will incur the expense of such testing and the AHJ may immediately revoke, modify, or suspend the use of such product or material within their jurisdiction. RER reserves the right to revoke this acceptance, if it is determined by Miami-Dade County Product Control Section that this product or material fails to meet the requirements of the applicable building code.

This product is approved as described herein, and has been designed to comply with the Florida Building Code, including the High Velocity Hurricane Zone.

DESCRIPTION: Quad-Lock Insulating Concrete Forms

APPROVAL DOCUMENT: Drawing titled "Quad-Lock EPS Panels & Ties", sheets 1 and 2 of 2, dated 10/04/2016, prepared by Quad-Lock Building Systems, Ltd., signed and sealed by Theodore Berman, P.E., bearing the Miami-Dade County Product Control renewal stamp with the Notice of Acceptance number and expiration date by the Miami-Dade County Product Control Section.

MISSILE IMPACT RATING: None

LABELING: Each bundle shall bear a permanent label with the manufacturer's name, Villa Rica, GA and the following statement: "Miami-Dade County Product Control Approved", unless otherwise noted herein.

RENEWAL of this NOA shall be considered after a renewal application has been filed and there has been no change in the applicable building code negatively affecting the performance of this product.

TERMINATION of this NOA will occur after the expiration date or if there has been a revision or change in the materials, use, and/or manufacture of the product or process. Misuse of this NOA as an endorsement of any product, for sales, advertising or any other purposes shall automatically terminate this NOA. Failure to comply with any section of this NOA shall be cause for termination and removal of NOA.

ADVERTISEMENT: The NOA number preceded by the words Miami-Dade County, Florida, and followed by the expiration date may be displayed in advertising literature. If any portion of the NOA is displayed, then it shall be done in its entirety.

INSPECTION: A copy of this entire NOA shall be provided to the user by the manufacturer or its distributors and shall be available for inspection at the job site at the request of the Building Official.

This NOA **renews NOA # 06-0407.06** and consists of this page 1, evidence page E-1 as well as approval document mentioned above.

The submitted documentation was reviewed by **Carlos M. Utrera, P.E.**

MIAMI-DADE COUNTY APPROVED

11/02/2016

NOTICE OF ACCEPTANCE: EVIDENCE SUBMITTED

A. DRAWINGS

1. Drawing No. titled "Quad-Lock EPS Panels & Ties", sheets 1 and 2 of 2, dated 10/04/2016, prepared by Quad-Lock Building Systems, Ltd., signed and sealed by Theodore Berman, P.E.

B. TESTS

Test Report	Test	Date	Signature
1. SGS 654:030334-1	ASTM D1929-96(2001)	02/26/10	J. Brian McDonald
2. QAI RJ0554-1	ASTM D635-06	03/03/10	Greg Banasky
3. 3154789MID-001	ASTM C518	08/25/08	Rick Curkeet, PE
4. BRYX.R5817	UL-723/ASTM E84	10/22/15	N/A

"Submitted under NOA # 06-0407.06"

Test Report	Test	Date	Signature
1. ETL 3105457SAT-001	ASTM E84	10/13/06	C. Bowness, PE
2. ETL 3080067(b)	ASTM D635	07/28/05	S. J. Emerman, PE
3. ETL 3080067(a)	ASTM D1929	07/28/05	S. J. Emerman, PE
4. ETL 3080072-02	ASTM C578	10/12/05	S. J. Emerman, PE
5. ETL 3080072-01	ASTM C518	09/30/05	S. J. Emerman, PE
6. ETL 3080072-01	ASTM E84	09/30/05	S. J. Emerman, PE
7. ETL 3080072-01	ASTM C1104	09/30/05	S. J. Emerman, PE
8. ETL 3080072-01	ASTM C665	09/30/05	S. J. Emerman, PE
9. ETL 3080072-01	ASTM C1304	09/30/05	S. J. Emerman, PE
10. ETL 3080072-01	ASTM E96	09/30/05	S. J. Emerman, PE
11. ETL 3080072-01	ASTM E970	09/30/05	S. J. Emerman, PE
12. ETL 3080072-01	ASTM C1338	09/30/05	S. J. Emerman, PE

C. CALCULATIONS

1. None.

D. QUALITY ASSURANCE

1. Miami-Dade Department of Regulatory and Economic Resources (RER)

E. MATERIAL CERTIFICATION

1. None.

F. STATEMENTS

1. Statement letter of code conformance to the 5th edition (2014) FBC and of no financial interest prepared by Ted Berman and Associates, LLC, dated 08/17/2016, signed and sealed by Theodore Berman, P.E.

11/02/2016

Carlos M. Utrera, P.E.
Product Control Examiner
NOA No 16-0314.12
Expiration Date: November 3, 2021
Approval Date: November 3, 2016

PRODUCT DESCRIPTION:

Quad-Lock Insulating Concrete Forms (ICFs) are manufactured from C578-compliant Type II and Type XI expanded polystyrene.The forms are used as stay-in-place form work for structural concrete, load-bearing and non load-bearing, below-grade and above-grade walls. The forms are used in construction of plain and reinforced concrete beams, lintels, exterior and interior walls, foundations walls and retaining walls. The forms remain in place after placement and curing of concrete to provide wall insulation, and must be covered with approved interior and exterior finish materials in accordance with the Florida Building Code. Exterior shall have final finish applied or be temporarily protected from exposure within 30 days of installation of ICF units. The concrete forming system shall comply with ACI 347, and the concrete walls shall comply with ACI 318.

QUAD-LOCK EPS PANEL PROPERTIES

Property	Test Standard	Regular Panel 2.25" Thick EPS		Ultra Panel 3.125" Thick EPS		Plus Panel 4.25" Thick EPS	
EPS Type	ASTM C578	Type IX	Pass	Type II	Pass	Type II	Pass
Thermal Resistance	ASTM C578/C518	4.2 (h•ft²•°F/BTU)	Pass	4.0 (h•ft²•°F/BTU)	Pass	4.0 (h•ft²•°F/BTU)	Pass
Water Vapor Permeance	ASTM C578/E96	2 perm/inch	Pass	3.5 perm/inch	Pass	3.5 perm/inch	Pass
Water Vapor Sorption	ASTM C578/C1104	0.16 %	Pass	0.16 %	Pass	0.16 %	Pass
Corrosiveness	ASTM C665 SECT. 13.8	None	Pass	None	Pass	None	Pass
Fungi Resistance	ASTM C1338		Pass		Pass		Pass
Odor Emission	ASTM C1304	None	Pass	None	Pass	None	Pass
Radiant Flux	ASTM E970	≥ 0.12	Pass	≥ 0.12	Pass	≥ 0.12	Pass
Flame Spread Index	ASTM E84	≤ 25		≤ 25		≤ 25	
Smoke Developed Index	ASTM E84	≤ 450		≤ 450		≤ 450	

QUAD-LOCK HDPE CROSS-TIE PROPERTIES

Property	Test Standard	Black Tie FTB4	Blue Tie FTB6	Yellow Tie FTY8	Green Tie FTG10	Red Tie FTR12	Brown Tie FTB14
Rate of Burn	ASTM C635	CC1 (Pass)					
Ignition Temperature	ASTM D1929/ ASTM E2634(B)	Pass					

PRODUCT RENEWED
as complying with the Florida Building Code
NOA-No. 16-0314.12
Expiration Date 11/03/2021
By
Miami-Dade Product Control

Ted Berman and Associates LLC
925 41st Street, Miami Beach, 33140
Certificate of Authorization 27502

THEODORE BERMAN LICENSE No 09814 STATE OF FLORIDA PROFESSIONAL ENGINEER

Theodore Berman, P.E.
FL PE No. 09814 10/17/2016

Note:
This approval pertains to the insulation properties of Quad-Lock Insulating Concrete Forms. This approval does not imply the approval of the concrete used with the form system, or the structural and/or forming capacity of the material and the system. The materials described on this sheet have been found to be fully compliant with the 2014 Florida Building Code, 5th edition.

QUAD-LOCK EPS PANELS & TIES

DATE DRAWN:	2016-06-09
CURRENT REVISION NO:	REV-1
REVISION DATE:	2016-10-04
SCALE:	NOT TO SCALE
DRAWN BY:	Z. PROSTRAN
SHEET SIZE:	8½" x 11"
Page	1 of 2

QUAD-LOCK® Building Systems Ltd.

Quad-Lock Building Systems Ltd.
7398 - 132nd Street
Surrey, BC V3W 4M7
Canada
888.711.5625 - Toll Free
604.590.3111
604.590.8412 - fax
www.quadlock.com

PRODUCT RENEWED
as complying with the Florida Building Code
NOA-No. 16-0314.12
Expiration Date 11/03/2021
By
Miami-Dade Product Control

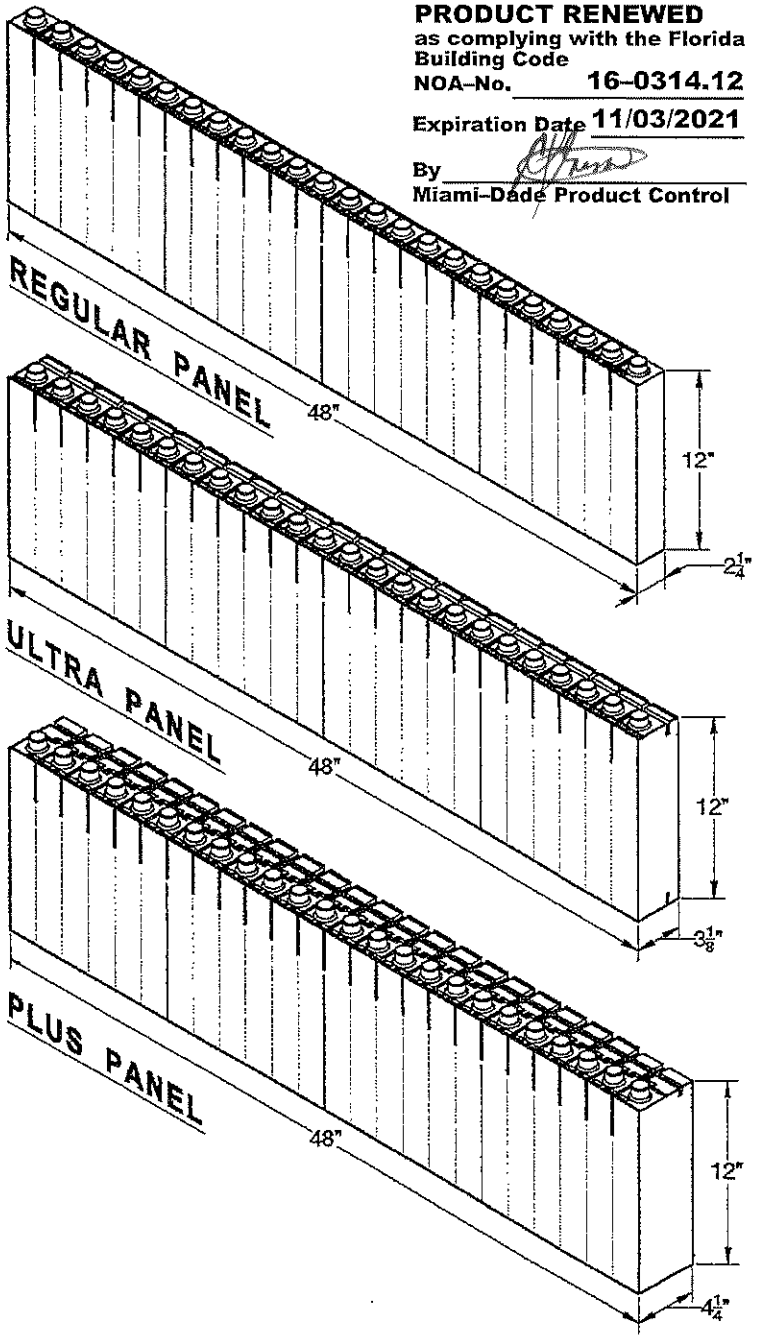

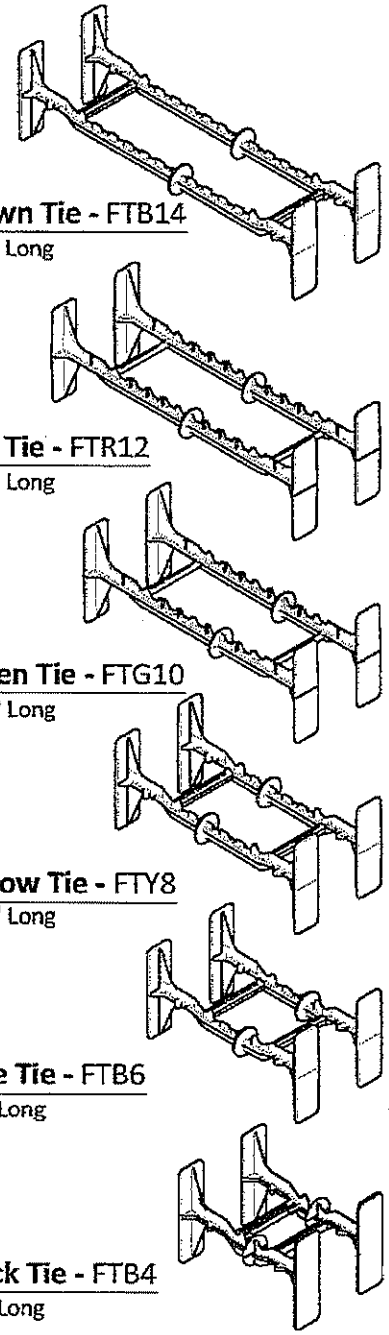

Ted Berman and Associates LLC
925 41st Street, Miami Beach, 33140
Certificate of Authorization 27502

THEODORE BERMAN LICENSE No 09814 STATE OF FLORIDA PROFESSIONAL ENGINEER

Theodore Berman, P.E.
FL PE No. 09814 10/17/2016

Note:
This approval pertains to the insulation properties of Quad-Lock Insulating Concrete Forms. This approval does not imply the approval of the concrete used with the form system, or the structural and/or forming capacity of the material and the system. The materials described on this sheet have been found to be fully compliant with the 2014 Florida Building Code, 5th edition.

QUAD-LOCK EPS PANELS & TIES		
DATE DRAWN:	2016-06-09	
CURRENT REVISION NO:	REV-1	
REVISION DATE:	2016-10-04	
SCALE:	NOT TO SCALE	
DRAWN BY:	Z. PROSTRAN	Page
SHEET SIZE:	8½" x 11"	2 of 2

QUAD-LOCK® Building Systems Ltd.

Quad-Lock Building Systems Ltd.
7398 - 132nd Street
Surrey, BC V3W 4M7
Canada
888.711.5625 - Toll Free
604.590.3111
604.590.8412 - fax
www.quadlock.com