MIAMI-DADE COUNTY
DEPARTMENT OF REGULATORY AND ECONOMIC RESOURCES (RER)
BOARD AND CODE ADMINISTRATION DIVISION

MIAMI-DADE COUNTY
PRODUCT CONTROL SECTION
11805 SW 26 Street, Room 208
T (786) 315-2590 F (786) 315-2599
www.miamidade.gov/economy

NOTICE OF ACCEPTANCE (NOA)

Marks USA I, LLC subsidiary of NAPCO Security Technologies, Inc.
365 Bayview Avenue
Amityville, NY 11701

SCOPE:

This NOA is being issued under the applicable rules and regulations governing the use of construction materials. The documentation submitted has been reviewed and accepted by Miami-Dade County RER - Product Control Section to be used in Miami Dade County and other areas where allowed by the Authority Having Jurisdiction (AHJ).

This NOA shall not be valid after the expiration date stated below. The Miami–Dade County Product Control Section (In Miami–Dade County) and/or the AHJ (in areas other than Miami–Dade County) reserve the right to have this product or material tested for quality assurance purposes. If this product or material fails to perform in the accepted manner, the manufacturer will incur the expense of such testing and the AHJ may immediately revoke, modify, or suspend the use of such product or material within their jurisdiction. RER reserves the right to revoke this acceptance, if it is determined by Miami–Dade County Product Control Section that this product or material fails to meet the requirements of the applicable building code.

This product is approved as described herein, and has been designed to comply with the Florida Building Code, including the High Velocity Hurricane Zone.-

DESCRIPTION: Component Approval – Marks USA I, LLC Series 5, 130, 175 & 195 Lockset Hardware Devices for Commercial Steel Doors – L.M.I.

APPROVAL DOCUMENT: Drawing No. **MD1**, titled "Marks USA 1, LLC", sheets 1 through 8 of 8, dated 02/13/04, 11/09/15, 11/13/15, and 11/17/15, with revision A dated 06/09/16, prepared by manufacturer, signed and sealed by Ronald Ogur, P.E., bearing the Miami-Dade County Product Control Revision stamp with the Notice of Acceptance number and expiration date by the Miami-Dade County Product Control Section.

MISSILE IMPACT RATING: Large and Small Missile Impact Resistant

LABELING: Each unit shall bear a permanent label with the manufacturer's name or logo, city, state, model/series, and following statement: "Miami-Dade County Product Control Approved", unless otherwise noted herein.

RENEWAL of this NOA shall be considered after a renewal application has been filed and there has been no change in the applicable building code negatively affecting the performance of this product.

TERMINATION of this NOA will occur after the expiration date or if there has been a revision or change in the materials, use, and/or manufacture of the product or process. Misuse of this NOA as an endorsement of any product, for sales, advertising or any other purposes shall automatically terminate this NOA. Failure to comply with any section of this NOA shall be cause for termination and removal of NOA.

ADVERTISEMENT: The NOA number preceded by the words Miami-Dade County, Florida, and followed by the expiration date may be displayed in advertising literature. If any portion of the NOA is displayed, then it shall be done in its entirety.

INSPECTION: A copy of this entire NOA shall be provided to the user by the manufacturer or its distributors and shall be available for inspection at the job site at the request of the Building Official.

This NOA **revises and renews NOA# 08-1204.03** and consists of this page 1 and evidence pages E-1 and E-2, as well as approval document mentioned above.

The submitted documentation was reviewed by **Manuel Perez, P.E.**

MIAMI-DADE COUNTY APPROVED

10/27/16

Marks USA I, LLC subsidiary of NAPCO Security Technologies, Inc.

NOTICE OF ACCEPTANCE: EVIDENCE SUBMITTED

A. DRAWINGS

1. Manufacturer's die drawings and sections.
   (Submitted under NOA's # 03-1112.01 and # 08-1204.03)
2. Drawing No **MD1**, titled "Marks USA 1LLC", sheets 1 through 8 of 8, dated 02/13/04, 11/09/15, 11/13/16 and 11/17/16, prepared by manufacturer, signed and sealed by Ronald Ogur, P.E.

B. TESTS

1. Test reports on: 1) Air Infiltration Test, per FBC, TAS 202-94
   2) Uniform Static Air Pressure Test, Loading per FBC TAS 202-94
   3) Water Resistance Test, per FBC, TAS 202-94
   4) Large Missile Impact Test per FBC, TAS 201-94
   5) Cyclic Wind Pressure Loading per FBC, TAS 203-94
   6) Forced Entry Test, per FBC 3603.2 (b) TAS 202-94

   along with marked-up drawings and installation diagram of 3 specimens of a commercial steel door (X), prepared by National Certified Testing Laboratories, Test Report No. **NCTL-110-19130-01**, dated 05/06/16, revised on 06/23/16 and 09/20/16, signed and sealed by Harold E. Rupp, P.E.
2. Test reports on: 1) Air Infiltration Test, per FBC, TAS 202-94
   2) Uniform Static Air Pressure Test, Loading per FBC TAS 202-94
   3) Water Resistance Test, per FBC, TAS 202-94
   4) Large Missile Impact Test per FBC, TAS 201-94
   5) Cyclic Wind Pressure Loading per FBC, TAS 203-94
   6) Forced Entry Test, per FBC 3603.2 (b) TAS 202-94

   along with marked-up drawings and installation diagram of 3 specimens of a commercial steel door (X), prepared by Hurricane Test Laboratory, Inc., Test Report No. **HTL-0279-1017-01**, dated 10/17/01, signed and sealed by Vinu J. Abraham, P.E.
   (Submitted under NOA # 03-1112.01)

C. CALCULATIONS: (For reference only from door approval file)

1. None

D. QUALITY ASSURANCE

1. Miami-Dade Department of Regulatory and Economic Resources (RER).

E. MATERIAL CERTIFICATIONS

1. None.

Manuel Perez

Manuel Perez, P.E.
Product Control Examiner
NOA No. 16-0316.03
Expiration Date: October 27, 2021
Approval Date: October 27, 2016

F. STATEMENTS

1. Statement letter of conformance, complying with **FBC-5th Edition (2014)**, and of no financial interest, dated June 17, 2016, issued, signed and sealed by Ronald Ogur, P.E.
2. Proposal No. **15-1231R** issued by the Product Control Section, dated September 18, 2015 and revised on November 30, 2015, signed by Manuel Perez, P.E.

G. OTHER

1. Notice of Acceptance No. **08-1204.03**, issued to Marks USA, a subsidiary of NAPCO Security Systems, Inc., for their Component Approval – Marks Series 5, 130 & 170 Lockset Hardware Devices-for Commercial Steel Doors – L.M.I., approved on 06/10/09 and expiring on 04/01/14.

Manuel Perez, P.E.
Product Control Examiner
NOA No. 16-0316.03
Expiration Date: October 27, 2021
Approval Date: October 27, 2016

DATE	REV.	DESCRIPTION	AUTH.	DRWN.	CHK.
06/09/16	A	UPDATED SPEC'S; REMOVED EXIT DEVICES	G.M.	L.M.	G.M.

MARKS USA 1LLC

SUBSIDIARY OF NAPCO SECURITY TECHNOLOGIES INC.
365 BAYVIEW AVE.
AMITYVILLE, NY 11701

MIAMI–DADE APPROVED HARDWARE COMPONENTS

GENERAL NOTES

1. THIS PRODUCT IS DESIGNED TO MEET FLORIDA BUILDING CODE 5TH EDITION (2014) FOR HIGH VELOCITY HURRICANE ZONE.
2. THE LOCK HARDWARE PRODUCTS LISTED IN THIS NOA SHALL BE USED IN CONJUNCTION WITH CURRENT NOA'S UTILIZING SIMILAR COMPONENTS AND WILL BE LIMITED BY THE LESSER DESIGN PRESSURE. THE PRODUCTS CAN BE USED WITH STEEL SIDE HINGED SWING DOORS, HOLDING CURRENT NOA.
3. DESIGN PRESSURE RATING SEE TABLE PAGE 1.
4. THE LOCK HARDWARE PRODUCTS LISTED IN THIS NOA MEET THE REQUIREMENTS FOR HIGH VELOCITY HURRICANE WIND BORNE DEBRIS ZONES AS PRESCRIBED IN SECTION 1626 OF THE FLORIDA BUILDING CODE, DESIGN PRESSURES ARE LIMITED BY THE NOA'S THAT THEY ARE USED IN CONJUNCTION WITH.

RESIDENTIAL & LIGHT COMMERCIAL 161 HARDWARE

MARKS USA 175 SERIES–CYLINDRICAL LOCK, GRADE 2 WITH
MARKS USA 130 SERIES–SINGLE CYLINDER DEAD BOLT LOCK, GRADE 2.
MARKS USA 195 SERIES–CYLINDRICAL LOCK, GRADE 1
MARKS USA 5 SERIES–MORTISE LOCK SET, GRADE 1

TABLE OF CONTENTS:

SHEET#	DESCRIPTION
1	GENERAL NOTES AND APPROVED HARDWARE MODELS
2	TYPICAL JAMB TO BUCK AND DOOR CROSS SECTION
3	MARKS USA, 5 SERIES MORTISE LOCK INSTALLATION TEMPLATE
4	MARKS USA, 175, 195 AND 475 SERIES CYLINDRICAL LOCK INSTALLATION TEMPLATE
5	MARKS USA, 130 SERIES DEADBOLT WITH 175 CYLINDRICAL LOCK INSTALLATION TEMPLATE
6	MARKS USA 5 SERIES MORTISE LOCK SPECIFICATIONS
7	MARKS USA 175 / 475 SERIES CYLINDRICAL & 130 SERIES TUBULAR DEADBOLT SPECIFICATIONS
8	MARKS USA 195 SERIES CYLINDRICAL LOCK SPECIFICATIONS

DESIGN PRESSURE RATING OUT/INSWING UNITS

HARDWARE MODEL	DOOR SIZE, TYPE & SWING (UNDER SEPARATE APPROVAL)	HARDWARE MODEL
MARKS USA 175 SERIES ANSI GRADE 2 CYLINDRICAL LOCKSET WITH 130 SERIES ANSI GRADE 2 DEADBOLT	35 3/4" X 83 1/8" STEEL OUT–SWING	+90.0 psf –90.0 psf
MARKS USA 195 SERIES ANSI GRADE 1 CYLINDRICAL LOCKS	35 3/4" X 83 1/8" STEEL OUT–SWING	+90.0 psf –90.0 psf
MARKS USA 5 SERIES ANSI GRADE 1 MORTISE LOCKS	35 3/4" X 83 1/8" STEEL OUT–SWING	+90.0 psf –90.0 psf

6-17-16

RONALD OGUR
LICENSE
No. 22894
STATE OF FLORIDA
PROFESSIONAL ENGINEER

LIMITATION AND SPECIFICATION NOTES

1. THIS DEVICE IS APPROVED TO BE EQUAL ALTERNATIVE TO BE USED IN SINGLE STEEL DOORS, HOLDING CURRENT NOA. THE LOWEST DESIGN PRESSURE RATING SHALL APPLY.
2. DOOR PANEL SHALL BE CORE FILLED WITH 3/4" CELL PAPER HONEYCOMB WITH MINIMUM OVERALL 1.75" THICKNESS.
3. DOOR PANEL FACE SHEETS TO BE MINIMUM 18 GA. (.045"MIN) OR BETTER FOR STEEL DOORS.
4. DOOR JAMBS SHALL BE MINIMUM 2" WIDE x 5.75" DEEP 16 GA. (.057"MIN) HOLLOW METAL STEEL FRAME OR BETTER.
5. THIS DEVICE SHALL BE INSTALLED IN A SINGLE DOOR NO WIDER THAN 35 3/4" AND HIGHER THAN 83 1/8" (SEE DESIGN PRESSURE TABLE).
6. ELECTRICAL/ELECTRONIC FUNCTION AND INSTALLATION OTHER THAN SELF CONTAINED ELECTRONIC DEVICE, IS NOT PART OF THIS APPROVAL AND SUCH INSTALLATION MUST BE REVIEWED BY CORRESPONDING BUILDING AUTHORITY.
7. LOCK REINFORCEMENT FOR MORTISE LOCKS SHALL BE .074" MINIMUM ROLL FORMED STEEL, 1.6875" WIDE, 4.75" DEEP WITH .035" LOCK CLIP, GLUED TO FACE SHEETS. TWO LOCK MOUNTING TABS, MINIMUM .074" WELDED TO DOOR EDGE 4 PLACES EACH. PREPARED FOR #12–24 LOCK MOUNTING SCREWS.
8. LOCK REINFORCEMENT FOR CYLINDRICAL AND TUBULAR LOCKS SHALL BE MINIMUM .078" ROLL FORMED STEEL, 1" WIDE, .66" DEEP, WELDED TO DOOR EDGE 4 PLACES. PREPARED FOR #8–32 LOCK MOUNTING SCREWS.

MARKS USA 1LLC

GENERAL NOTES AND APPROVED HARDWARE MODELS

REV: A
DWG. NO. MD1
SHEET 1 OF 8
SCALE: N.T.S.

APPROVALS		DATE
DRAWN:	E.B.	11-13-15
CHECKED:		
APPROVED:		

UNLESS OTHERWISE SPECIFIED DIMENSIONS ARE IN INCHES.
TOLERANCES ARE:
FRACTIONS ± 1/64 DECIMALS .XXX ±.005 .XX ±.010 ANGLES ±1°

DO NOT SCALE DRAWING

PREPARED BY:
RONALD OGUR
FPE # 22894
STRUCTURAL AND CIVIL ENGINEER
40 UNDERHILL BLVD.
SYOSSET, N.Y. 11791

PRODUCT REVISED as complying with the Florida Building Code
Acceptance No. 16-0316.03
Expiration Date Oct. 7, 2021
By Miami Dade Product Control

DATE	REV.	DESCRIPTION	AUTH.	DRWN.	CHK.
06/09/16	A	UPDATED SHEET #	G.M.	L.M.	G.M.

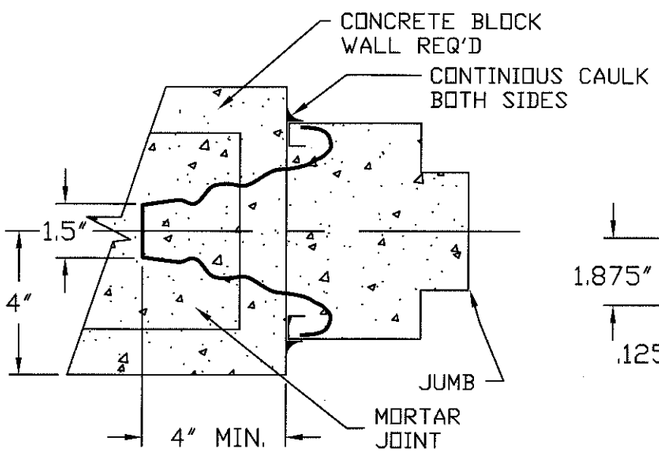

MASONRY WIRE ANCHORS (0.175" DIA.)
IN HORIZ. MORTAR JOINTS;
FILL LAMBS SOLID WITH MORTAR

WIRE ANCHOR DETAIL

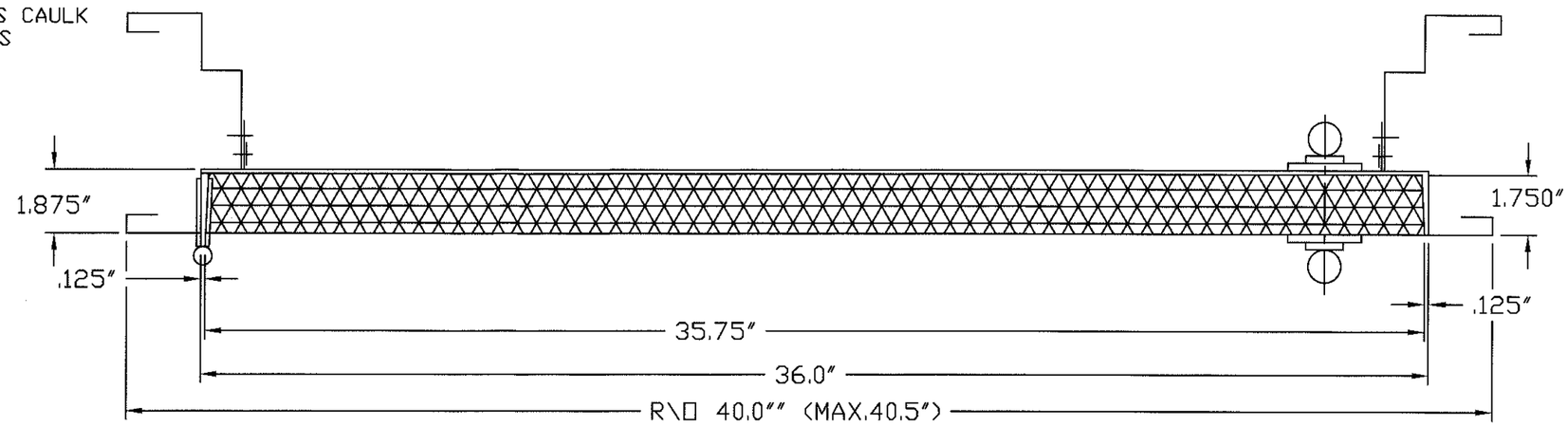

TYPICAL FLUSH OUTSWING COMMERCIAL STEEL

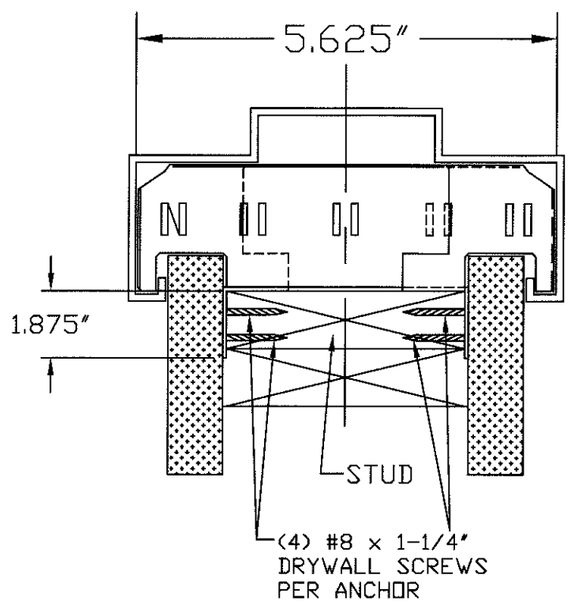

STUD ANCHOR DETAIL

DOOR AND FRAME:

MINIMUM DOOR THICKNESS OF 1-3/4"

STEEL FRAME: BRAKE FORMED STEEL, .057" MINIMUM WITH DIE MITERED, CONTINUOSLY WELDED CORNERS.

LOCK AND STRIKE MOUNTING SCREWS:

MORTISE LOCK AND STRIKE: 12-24 x 3/4" FLAT HEAD COMBINATION THREAD

CYLINDRICAL LOCK: 8-32 x 3/4" FLAT HEAD COMBINATION THREAD

CYLINDRICAL LOCK STRIKE: 12-24 x 3/4" FLAT HEAD COMBINATION THREAD

DEADBOLT LOCK AND STRIKE: 8-32 x 3/4" FLAT HEAD COMBINATION THREAD

RONALD OGUR
LICENSE
No. 22894
STATE OF
FLORIDA
PROFESSIONAL ENGINEER

6-17-16

PREPARED BY:
RONALD OGUR
FPE # 22894
STRUCTURAL AND CIVIL ENGINEER
40 UNDERHILL BLVD.
SYOSSET, N.Y. 11791

PRODUCT REVISED
as complying with the Florida
Building Code
Acceptance No 16-0316.03
Expiration Date Oct. 27, 2021
By Manuel Perez
Miami-Dade Product Control

APPROVALS		DATE
DRAWN:	E.B.	11/13/15
CHECKED:		
APPROVED:		

UNLESS OTHERWISE SPECIFIED DIMENSIONS ARE IN INCHES.

TOLERANCES ARE:

FRACTIONS	DECIMALS	ANGLES
$\pm\frac{1}{64}$	.XXX ±0.005	±1°

DO NOT SCALE DRAWING

MARKS USA 1LLC

SUBSIDIARY OF NAPCO SECURITY TECHNOLOGIES INC.

TITLE: TYPICAL JAMB TO BUCK & DOOR CROSS SECTIONS

SCALE: NONE | DWG. NO. MD1 | REV: A

SHEET 2 OF 8

DATE	REV.	DESCRIPTION	AUTH.	DRWN.	CHK.
06/09/16	A	UPDATED TITLE AND SHEET #	G.M.	L.M.	G.M.

FUNCTIONS	HOLES REQUIRED: OUTSIDE OF DOOR			INSIDE OF DOOR				THRU	
HOLE	a	b	f	a	b	f	e	c	d
DIA.	$1\frac{1}{4}$	$\frac{5}{8}$	$\frac{7}{8}$	$1\frac{1}{4}$	$\frac{5}{8}$	$\frac{7}{8}$	$1\frac{5}{8}$	1	$\frac{3}{8}$
A, B, BW, F, FD, FS, FW, H	●				●	●		●	●
AC, C, FA, FC, FX, G, GC, GL, WW	●			●				●	●
D, DW, E, EL, EU, EW, J, JM	●							●	●
HOTELW/IND.	●		●		●	●		●	●
L, LF, LJ		●			●	●		●	●
LH	●	●			●	●		●	●
N								●	●
P	●				●	●			
S	●								
SC	●						●		
T	●			●					

NOTE: 1.CONSULT FACTORY TO INSURE TEMPLATE IS LATEST REVISION.
2.ADD 1/64" WHEN DUST BOX IS USED.

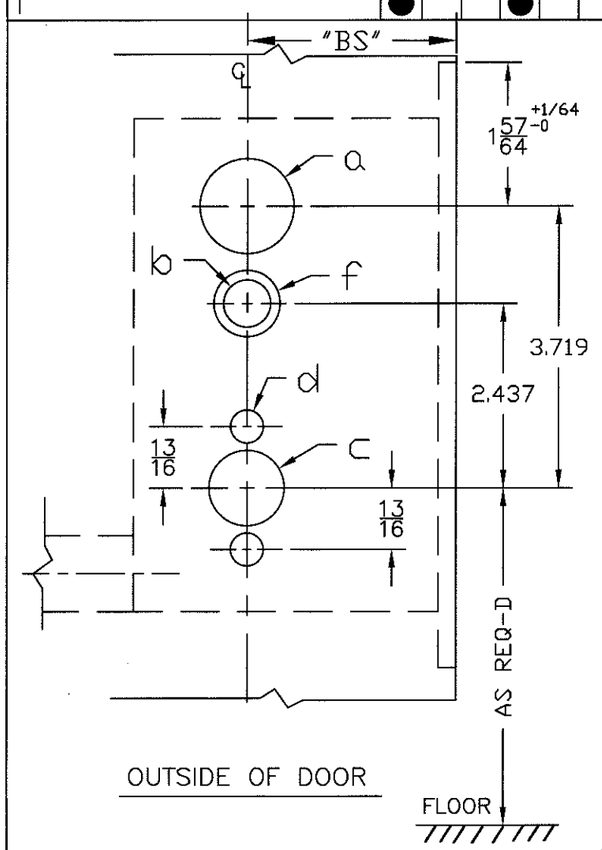

OUTSIDE OF DOOR

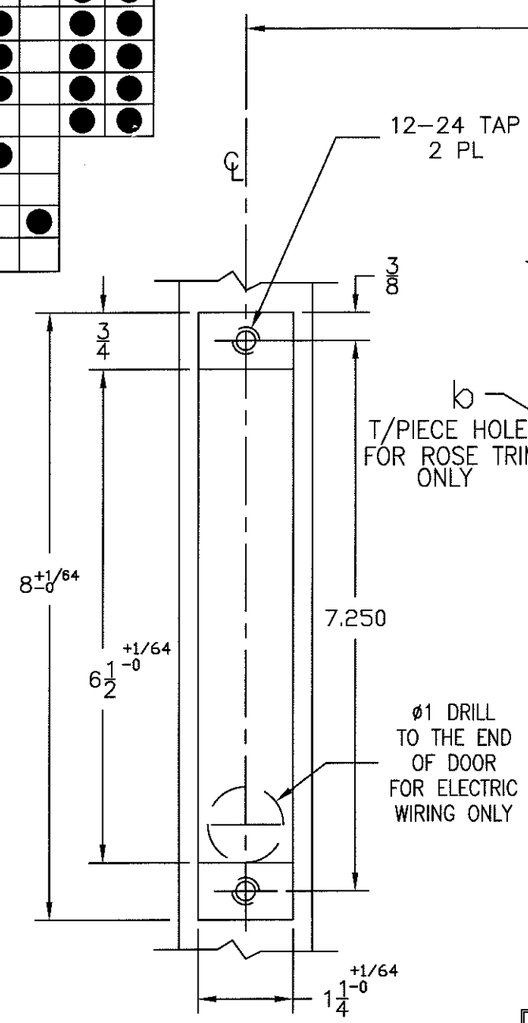

DOOR EDGE

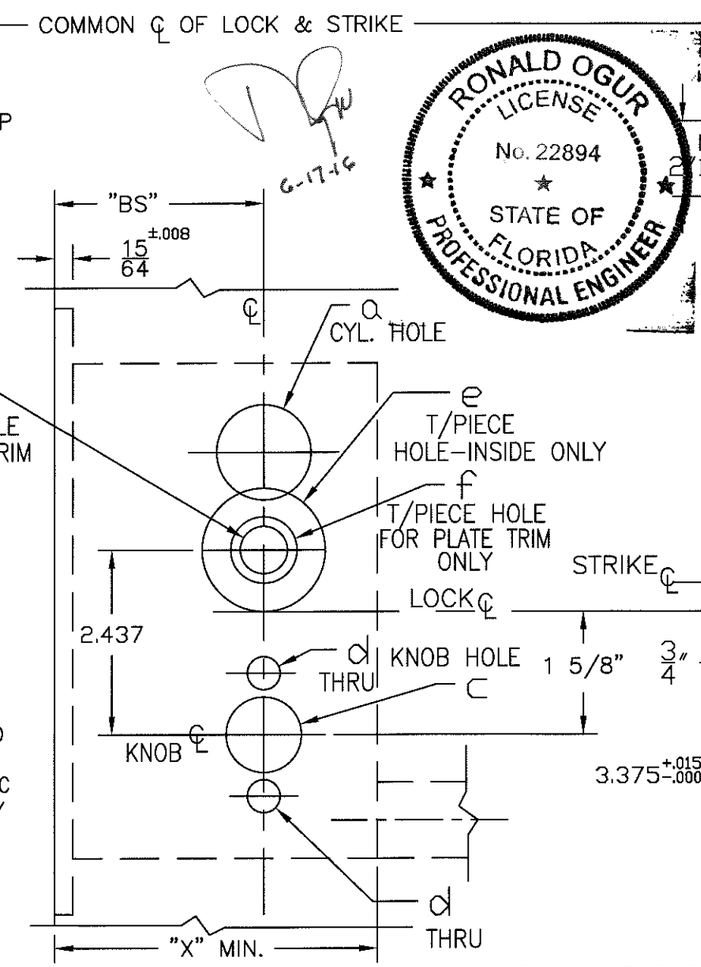

INSIDE OF DOOR

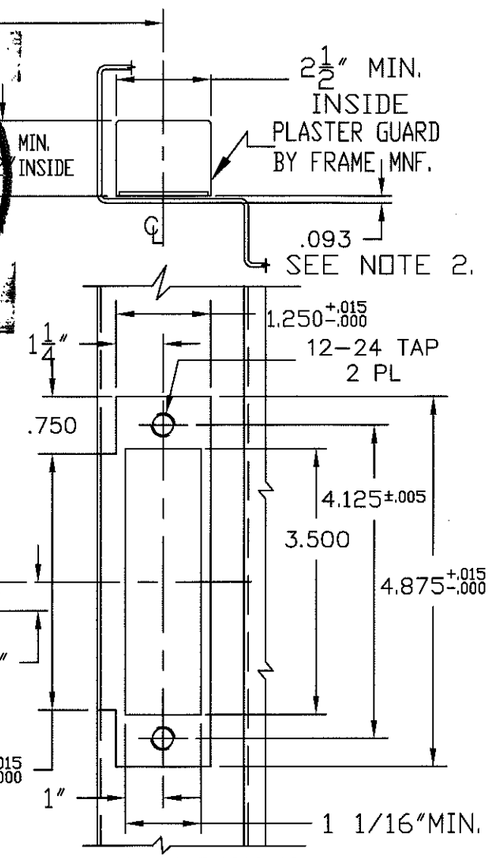

FRAME DIMENSIONS

NOTE: TOLERANCES SHOWN ARE FOR CUTOUTS.

LOCK CASE SUPPORT IS REQ,D FROM DOOR MFR.

LOCKSET SERIES	"BS"	"X"MIN.
5	$2\frac{3}{4}$	$4\frac{1}{4}$
55	$2\frac{1}{2}$	4

PRODUCT REVISED
as complying with the Florida Building Code
Acceptance No 16-0316.03
Expiration Date Oct. 27, 2021
By Manuel Perez
Miami-Dade Product Control

ISSUED DATE:

© 2004 MARKS USA 1LLC

RONALD OGUR LICENSE No. 22894 STATE OF FLORIDA PROFESSIONAL ENGINEER

6-17-16

PREPARED BY:
RONALD OGUR
FPE # 22894
STRUCTURAL AND CIVIL ENGINEER
40 UNDERHILL BLVD.
SYOSSET, N.Y. 11791

TOLERANCES (EXCEPT AS NOTED)
DECIMAL ±.005
FRACTIONAL ±1/64"
ANGULAR ±1°

MARKS USA 1LLC

SCALE 1:2
DRAWN BY: E.B.
CHECKED BY:
APPROVED BY:

TITLE MARKS USA, 5 SERIES MORTISE LOCK INSTALLATION TEMPLATE

DATE	DWG. SIZE	DRAWING NUMBER	REV.
02-13-04	B	MD1	A

SHEET 3 OF 8

DATE	REV.	DESCRIPTION	AUTH.	DRWN.	CHK.
06/09/16	A	UPDATED TITLE AND SHEET #	G.M.	L.M.	G.M.

NOTE:
1. CONSULT FACTORY TO INSURE TEMPLATE IS LATEST REVISION.
2. LOCK CASE SUPPORT IS REQUIRED FROM DOOR MFR.
3. ADD 1/32" WHEN DUST BOX AND STRIKE .080±.002 THICKNESS ARE USED

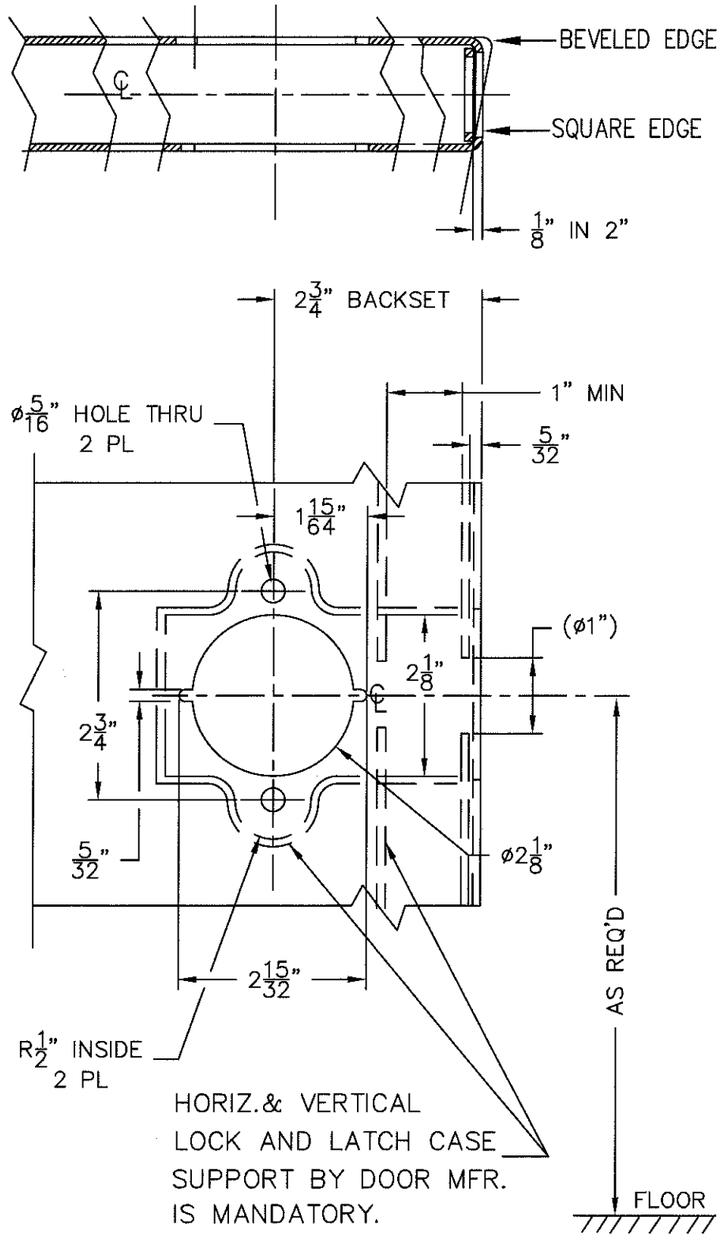

HORIZ.& VERTICAL LOCK AND LATCH CASE SUPPORT BY DOOR MFR. IS MANDATORY.

OUTSIDE OF DOOR

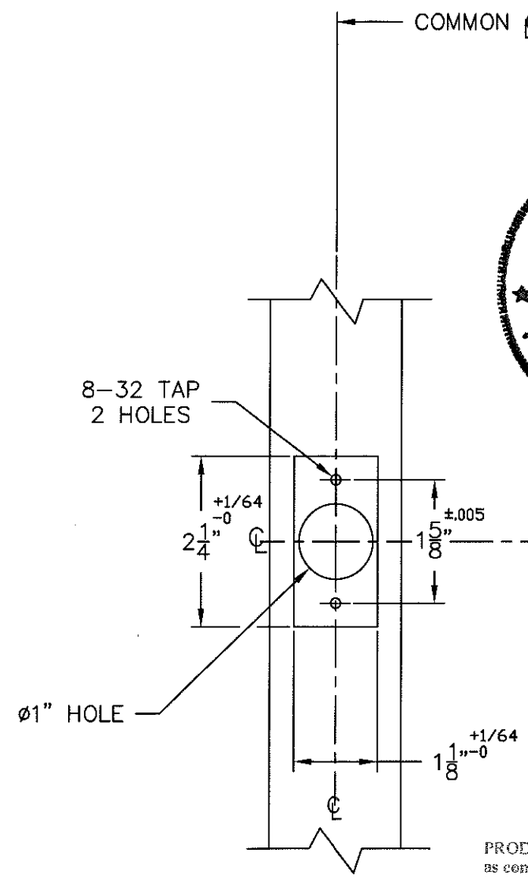

DOOR EDGE

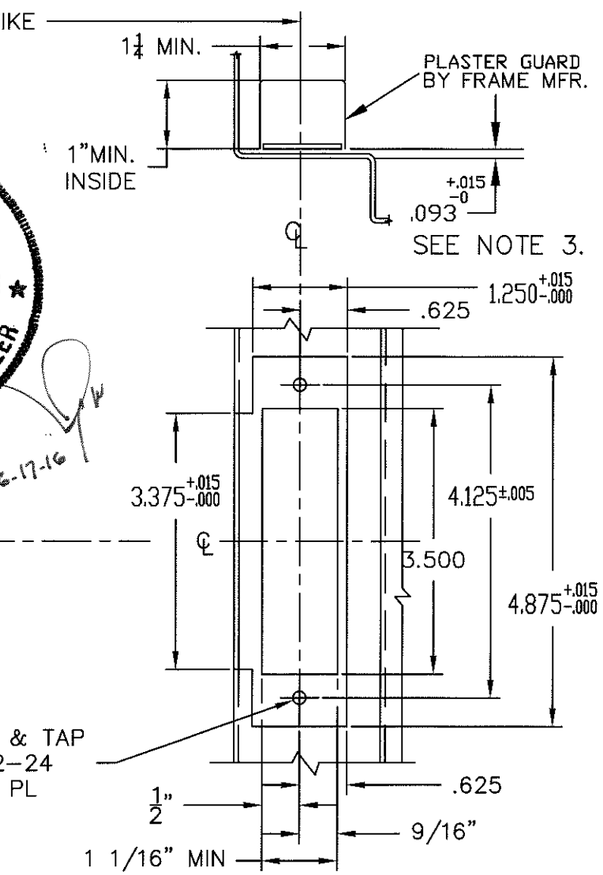

FRAME DIMENSIONS

NOTE: TOLERANCES SHOWN ARE FOR CUTOUTS.

RONALD OGUR LICENSE No. 22894 STATE OF FLORIDA PROFESSIONAL ENGINEER

6-17-16

PRODUCT REVISED as complying with the Florida Building Code Acceptance No 16-0316.03 Expiration Date Oct. 27, 2021 By Manuel Perez Miami Dade Product Control

FUNCTIONS :						
AB	DA	DC	DW	F	H	—
L	N	NB	P	S	SB	—
RAB	RDA	RDC	RDW	RF	RS	RSB

ISSUED DATE:

© 2004 MARKS USA 1LLC

PREPARED BY:
RONALD OGUR
FPE # 22894
STRUCTURAL AND CIVIL ENGINEER
40 UNDERHILL BLVD.
SYOSSET, N.Y. 11791

TOLERANCES (EXCEPT AS NOTED)
DECIMAL ±.005
FRACTIONAL ±1/64"
ANGULAR ±1°

MARKS USA 1LLC

SCALE 1:2
DRAWN BY: E.B.
CHECKED BY:
APPROVED BY:

TITLE MARKS USA 175,195 AND 475 SERIES CYLINDRICAL LOCK INSTALLATION TEMPLATE

DATE	DWG. SIZE	DRAWING NUMBER	REV.
02-13-04	B	MD1	A

SHEET 4 OF 8

DATE	REV.	DESCRIPTION	AUTH.	DRWN.	CHK.
06/09/16	A	UPDATED TITLE AND SHEET #	G.M.	L.M.	G.M.

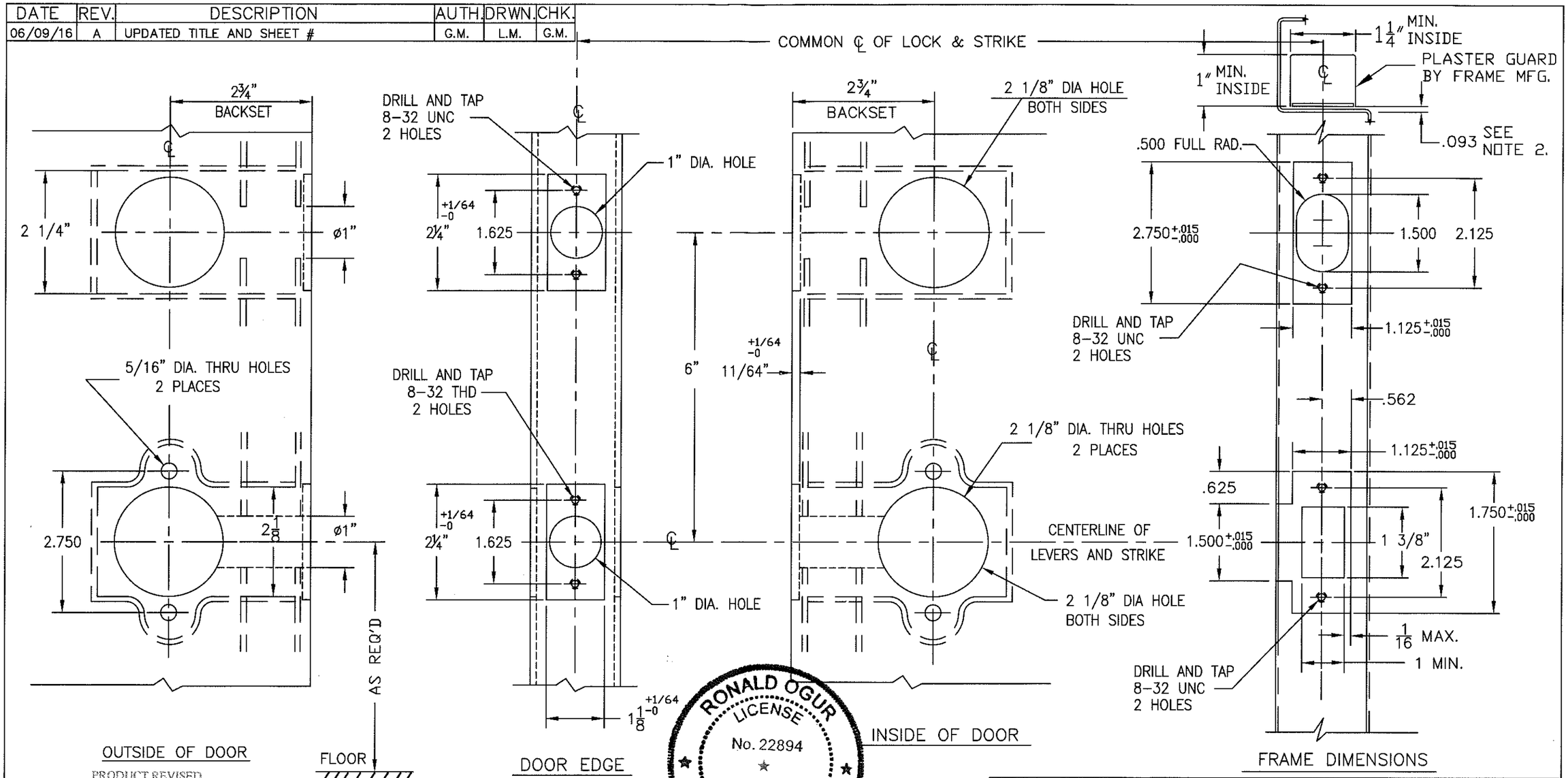

PRODUCT REVISED
as complying with the Florida
Building Code
Acceptance No 16-0316.03
Expiration Date Oct. 27, 2021
By Manuel Perez
Miami-Dade Product Control

LOCK AND LATCH CASE SUPPORTS ARE REQUIRED FROM DOOR MANUFACTURER

RONALD OGUR
LICENSE
No. 22894
STATE OF FLORIDA
PROFESSIONAL ENGINEER

6-17-16

NOTES:

1. CONSULT FACTORY TO ENSURE TEMPLATE IS LATEST REVISION.
2. ADD 1/64" WHEN DUST BOX IS USED
3. TOLERANCES SHOWN ARE FOR CUT OUTS

ISSUED DATE:

© 2005 MARKS USA 1LLC

TOLERANCES (EXCEPT AS NOTED)	MARKS USA 1LLC			
DECIMAL ±.005		SCALE: 1:2	DRAWN BY: E.B.	
			CHECKED BY:	
			APPROVED BY:	
FRACTIONAL ±.010	TITLE MARKS USA 130 DEADBOLT WITH 175 CYLINDRICAL LOCK INSTALLATION TEMPLATE			
ANGULAR ±1°	DATE 11/17/15	DWG. SIZE: B	DWG NO. MD1	REV. A
			SHEET 5 OF 8	

MD1

SHEET 6 OF 8

DATE	REV.	DESCRIPTION	AUTH.	DRWN.	CHK.
06/09/16	A	UPDATED TITLE AND SHEET #	G.M.	L.M.	G.M.

MORTISE LOCK SPECIFICATION:
5–SERIES = ANSI A156.13 – 2012
GRADE 1 OPERATIONAL
GRADE 1 SECURITY
UL LISTED FOR 3 HOUR DOORS
EXPOSED TRIM: FORGED BRASS AND STAINLESS STEEL LEVERS OR KNOBS
WROUGHT BRASS, BRONZE AND STAINLESS STEEL ROSES.
WROUGHT AND COLD FORGED ESCUTCHEONS.
KEYING: 6 PIN BRASS CYLINDERS WITH NICKEL SILVER KEYS.
BACK SET: 2 3/4", 2 1/2" AVAILABLE
LATCHES: 3/4" THROW – STAINLESS STEEL.
DEAD BOLT: 1" THROW – STAINLESS STEEL.
STRIKE: ANSI 1 1/4" X 4 7/8" X 1 3/16" LIP STANDARD.

LATCHBOLT/DEADBOLT DIMENSIONS:
LATCHBOLT: 3/4" THROW, .640" X 1.000"
DEADBOLT: 1" THROW, .500" X 1.125"

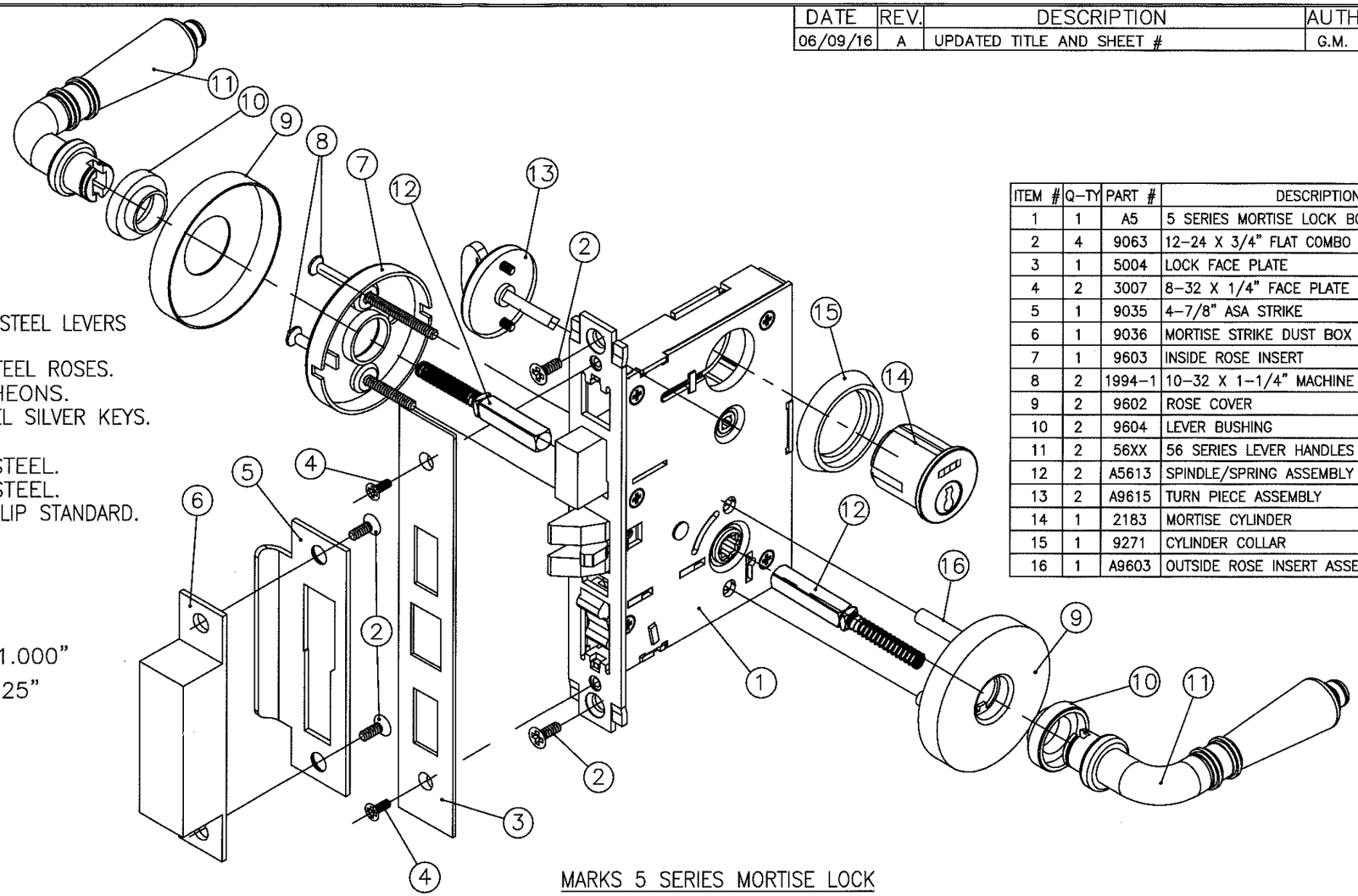

MARKS 5 SERIES MORTISE LOCK

ITEM #	Q–TY	PART #	DESCRIPTION
1	1	A5	5 SERIES MORTISE LOCK BODY
2	4	9063	12–24 X 3/4" FLAT COMBO THREAD SCREW
3	1	5004	LOCK FACE PLATE
4	2	3007	8–32 X 1/4" FACE PLATE SCREW
5	1	9035	4–7/8" ASA STRIKE
6	1	9036	MORTISE STRIKE DUST BOX
7	1	9603	INSIDE ROSE INSERT
8	2	1994–1	10–32 X 1–1/4" MACHINE SREW
9	2	9602	ROSE COVER
10	2	9604	LEVER BUSHING
11	2	56XX	56 SERIES LEVER HANDLES
12	2	A5613	SPINDLE/SPRING ASSEMBLY
13	2	A9615	TURN PIECE ASSEMBLY
14	1	2183	MORTISE CYLINDER
15	1	9271	CYLINDER COLLAR
16	1	A9603	OUTSIDE ROSE INSERT ASSEMBLY

6-17-16

RONALD OGUR LICENSE No. 22894 STATE OF FLORIDA PROFESSIONAL ENGINEER

PREPARED BY:
RONALD OGUR
FPE # 22894
STRUCTURAL AND CIVIL ENGINEER
40 UNDERHILL BLVD.
SYOSSET, N.Y. 11791

PRODUCT REVISED
as complying with the Florida Building Code
Acceptance No 16-0316.03
Expiration Date Oct. 27, 2021
By Manuel Perez
Miami Dade Product Control

APPROVALS		DATE
DRAWN:	E.B.	11–09–15
CHECKED:		
APPROVED:		

UNLESS OTHERWISE SPECIFIED DIMENSIONS ARE IN INCHES.

TOLERANCES ARE:

FRACTIONS	DECIMALS	ANGLES
± 1/64	.XXX ±.005 .XX ±.010	±1°

DO NOT SCALE DRAWING

MARKS USA 1LLC

SUBSIDIARY OF NAPCO SECURITY TECHNOLOGIES INC.

TITLE: MARKS USA 5 SERIES MORTISE LOCK SPECIFICATIONS

DWG. NO. MD1 REV: A

SCALE: N.T.S. SHEET 6 OF 8

MD1

SHEET 7 OF 8

DATE	REV.	DESCRIPTION	AUTH.	DRWN.	CHK.
06/09/16	A	UPDATED TITLE AND SHEET #	G.M.	L.M.	G.M.

ITEM #	Q-TY	PART #	DESCRIPTION
1	1	A170	CYLINDRICAL LOCK CHASSIS
2	1	1134	LATCH ASSEMBLY
3	1	9073	8-32 X 3/4" FLAT COMBO THREAD SCREW
4	2	1135	STRIKE
5	2	9063	12-24 X 3/4" FLAT COMBO THREAD SCREW
6	1	A1973	EXTERIOR ROSE INSERT ASSEMBLY
7	1	1997	CYLINDER RETAINER
8	1	1982	CYLINDER
9	2	1752	LEVER, "AMERICAN"
10	2	2752	LEVER, "CRESCENT"
11	2	3752	LEVER, "MONACO"
12	2	4752	LEVER, "TITAN"
13	1	A1971	INTERIOR ROSE INSERT ASSEMBLY
14	2	1985	10-32 X 2-1/2" FLAT HEAD MACHINE SCREW
15	1	1978	ROSE SHELL

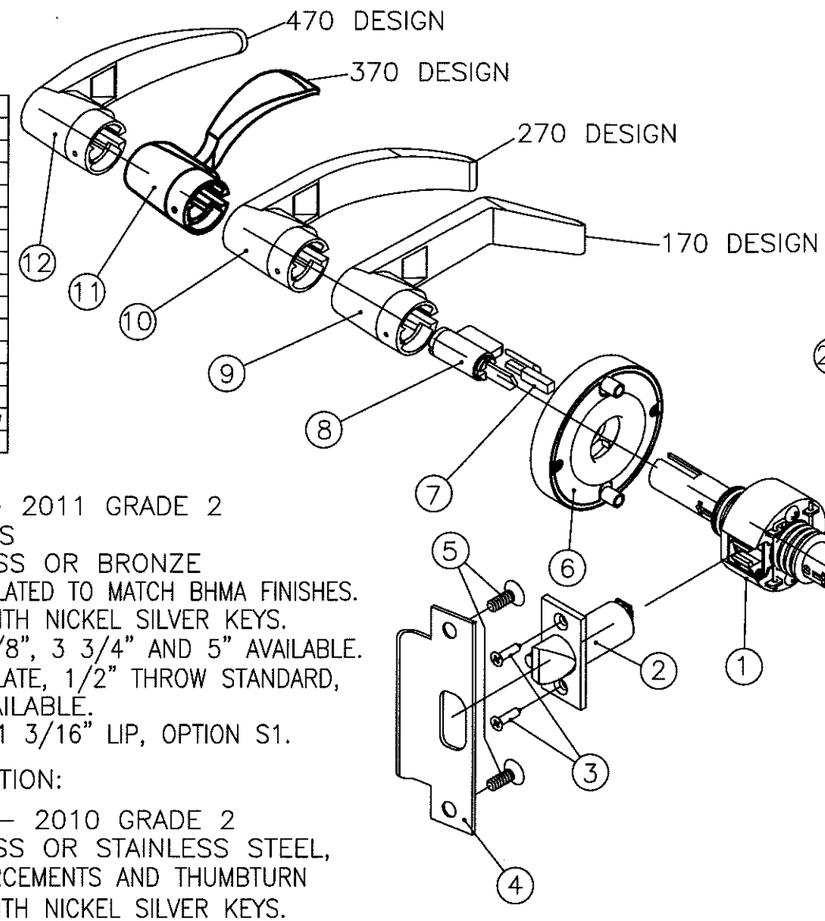

ITEM #	Q-TY	PART #	DESCRIPTION
21	1	1334	DEADBOLT LATCH ASSEMBLY
22	4	9073	8-32 X 3/4" FLAT COMBO THREAD SCREW
23	1	1335	STRIKE
24	2	1136	DUST BOX
25	1	1982	CYLINDER
26	1	1353	CYLINDER TAIL
27	1	A1341	DEADBOLT OUTSIDE ASSEMBLY
28	1	A1349	DEADBOLT INSIDE TURNPIECE ASSEMBLY
29	2	1345	1/4-20 X 2-1/2" SCREW

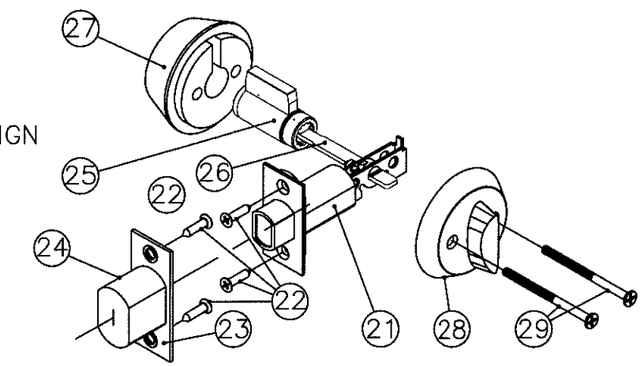

MARKS 130 SERIES TUBULAR DEAD BOLT

175-SERIES = ANSI A156.2 – 2011 GRADE 2
UL LISTED FOR 3 HOUR DOORS
EXPOSED TRIM: WROUGHT BRASS OR BRONZE
LEVERS ARE PRESSURE CAST ZINC, PLATED TO MATCH BHMA FINISHES.
KEYING: 6 PIN BRASS CYLINDERS WITH NICKEL SILVER KEYS.
BACK SET: 2 3/4" STANDARD, 2 3/8", 3 3/4" AND 5" AVAILABLE.
LATCHES: 1 1/8" X 2 1/4" FACEPLATE, 1/2" THROW STANDARD, BRASS BOLT, 3/4" THROW AVAILABLE.
STRIKE: ANSI 1 1/4" X 4 7/8" X 1 3/16" LIP, OPTION S1.

DEAD BOLT SPECIFICATION:

130-SERIES = ANSI A156.36 – 2010 GRADE 2
EXPOSED TRIM: WROUGHT BRASS OR STAINLESS STEEL, WITH PRESSURE CAST ZINC REINFORCEMENTS AND THUMBTURN
KEYING: 6 PIN BRASS CYLINDERS WITH NICKEL SILVER KEYS.
BACKSET: 2 3/4" STANDARD, 2 3/8" AVAILABLE
DEADBOLT: 1 1/8" X 2 1/4" FACEPLATE, 1" THROW STANDARD, HIGH STRENGTH CAST ALLOY BOLT.
STRIKE: 1 1/8" X 2 3/4" STANDARD.

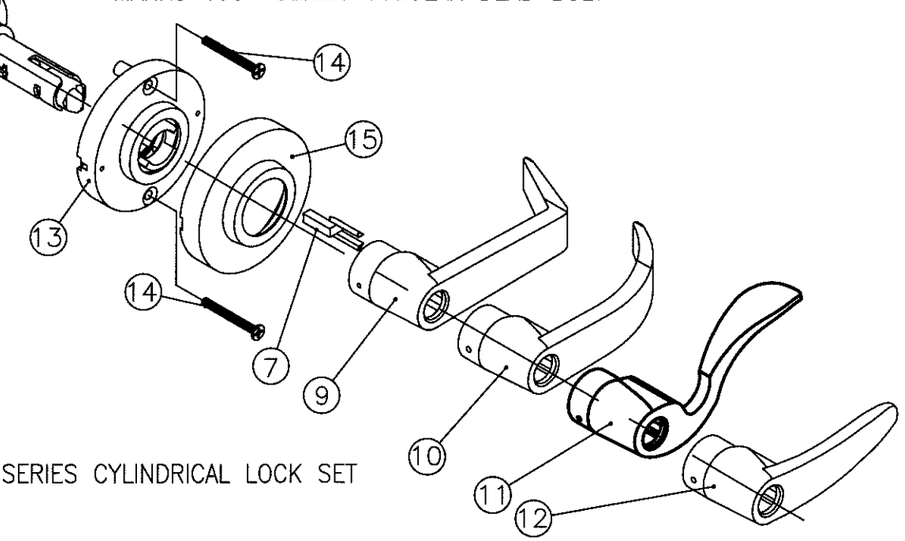

MARKS 175-475 SERIES CYLINDRICAL LOCK SET

RONALD OGUR LICENSE No. 22894 STATE OF FLORIDA PROFESSIONAL ENGINEER

6-17-16

PREPARED BY:
RONALD OGUR
FPE # 22894
STRUCTURAL AND CIVIL ENGINEER
40 UNDERHILL BLVD.
SYOSSET, N.Y. 11791

PRODUCT REVISED
as complying with the Florida Building Code
Acceptance No 16-0316.03
Expiration Date Oct. 27, 2021
By Manuel Sera
Miami Dade Product Control

APPROVALS		DATE
DRAWN:	E.B.	11-09-15
CHECKED:		
APPROVED:		

UNLESS OTHERWISE SPECIFIED DIMENSIONS ARE IN INCHES.

TOLERANCES ARE:

FRACTIONS	DECIMALS	ANGLES
± 1/64	.XXX ±.005 .XX ±.010	±1°

DO NOT SCALE DRAWING

MARKS USA 1LLC

SUBSIDIARY OF NAPCO SECURITY TECHNOLOGIES INC.

TITLE: MARKS USA 175 / 475 SERIES CYLINDRICAL & 130 SERIES TUBULAR DEADBOLT SPECIFICATIONS

DWG. NO. MD1 REV: A

SCALE: N.T.S. SHEET 7 OF 8

MD1

SHEET 8 OF 8

DATE	REV.	DESCRIPTION	AUTH.	DRWN.	CHK.
06/09/16	A	UPDATED TITLE AND SHEET #	G.M.	L.M.	G.M.

ITEM #	Q-TY	PART #	DESCRIPTION
1	1	A190	CYLINDRICAL LOCK CHASSIS
2	1	1134	LATCH ASSEMBLY, GRADE 1,
3	1	9073	8-32 X 3/4" FLAT COMBO THREAD SCREW
4	2	1135	STRIKE
5	2	9063	12-24 X 3/4" FLAT COMBO THREAD SCREW
6	1	A1973	EXTERIOR ROSE INSERT ASSEMBLY
7	1	1997	CYLINDER RETAINER
8	1	1982	CYLINDER
9	2	1752	LEVER, "AMERICAN"
10	2	2752	LEVER, "CRESCENT"
11	2	3752	LEVER, "MONACO"
12	2	4752	LEVER, "TITAN"
13	1	A1971	INTERIOR ROSE INSERT ASSEMBLY
14	2	1985	10-32 X 2-1/2" FLAT HEAD MACHINE SCREW
15	2	1978	ROSE SHELL

195-SERIES = ANSI A156.2 - 2011 GRADE 1
UL LISTED FOR 3 HOUR DOORS
EXPOSED TRIM: WROUGHT BRASS OR BRONZE
LEVERS ARE PRESSURE CAST ZINC, PLATED TO MATCH BHMA FINISHES.
KEYING: 6 PIN BRASS CYLINDERS WITH NICKEL SILVER KEYS.
BACK SET: 2 3/4" STANDARD, 2 3/8", 3 3/4" AND 5" AVAILABLE.
LATCHES: 1 1/8" X 2 1/4" FACEPLATE, 1/2" THROW STANDARD, BRASS BOLT, 3/4" THROW AVAILABLE.
STRIKE: ANSI 1 1/4" X 4 7/8" X 1 3/16" LIP, OPTION S1.

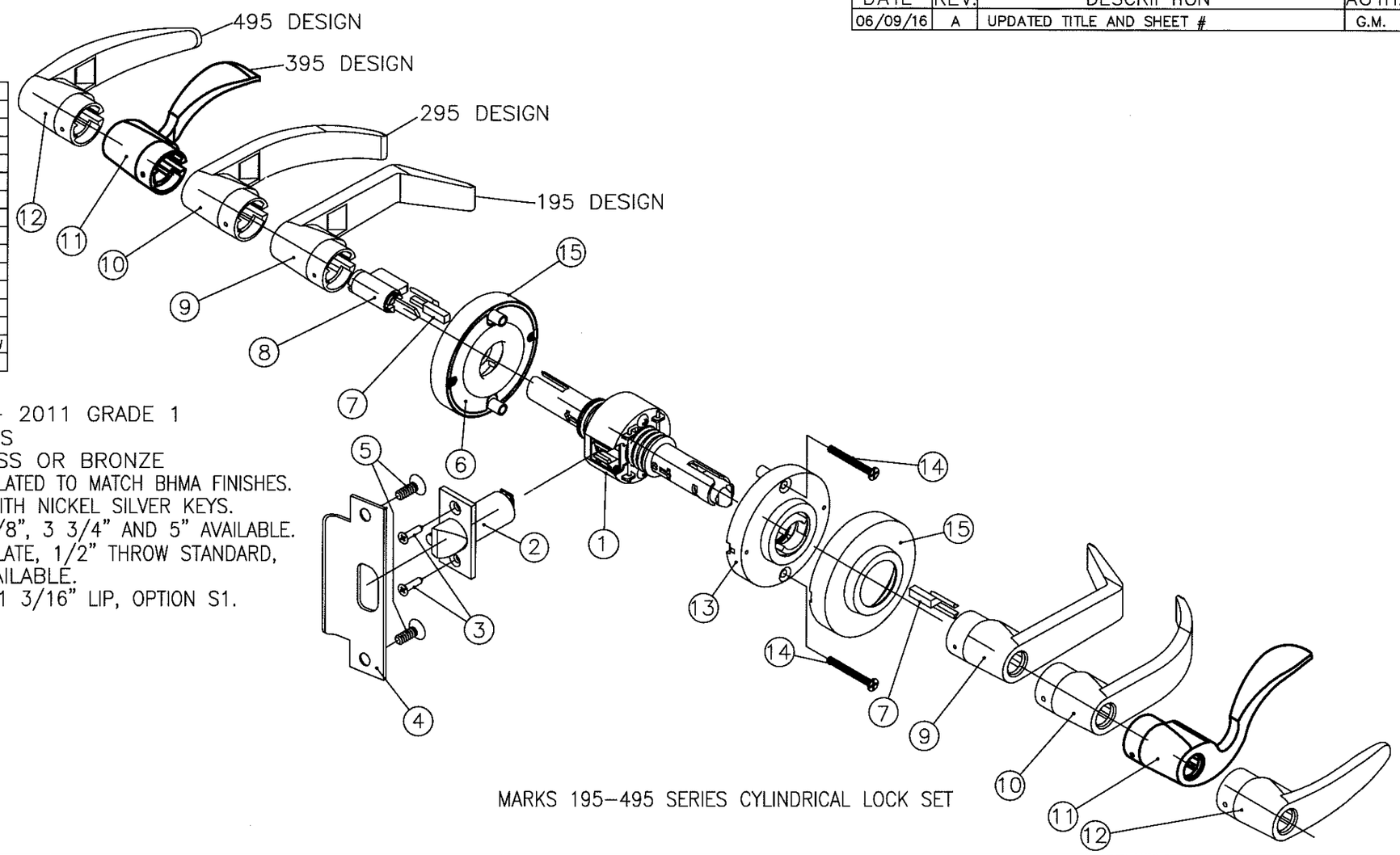

MARKS 195-495 SERIES CYLINDRICAL LOCK SET

6-17-16

RONALD OGUR LICENSE No. 22894 STATE OF FLORIDA PROFESSIONAL ENGINEER

PREPARED BY:
RONALD OGUR
FPE # 22894
STRUCTURAL AND CIVIL ENGINEER
40 UNDERHILL BLVD.
SYOSSET, N.Y. 11791

PRODUCT REVISED
as complying with the Florida
Building Code
Acceptance No 16-0316.03
Expiration Date Oct. 21, 2021
By Manuel Perez
Miami Dade Product Control

APPROVALS		DATE
DRAWN:	E.B.	11-09-15
CHECKED:		
APPROVED:		

UNLESS OTHERWISE SPECIFIED DIMENSIONS ARE IN INCHES.

TOLERANCES ARE:

FRACTIONS	DECIMALS	ANGLES
± 1/64	.XXX ±.005 .XX ±.010	±1°

DO NOT SCALE DRAWING

MARKS USA 1LLC

SUBSIDIARY OF NAPCO SECURITY TECHNOLOGIES INC.

TITLE: MARKS USA 195 SERIES CYLINDRICAL LOCK SPECIFICATIONS

DWG. NO. MD1 REV: A

SCALE: N.T.S. SHEET 8 OF 8