MIAMI-DADE COUNTY
PRODUCT CONTROL SECTION
11805 SW 26 Street, Room 208
Miami, Florida 33175-2474
T (786) 315-2590 F (786) 315-2599
www.miamidade.gov/economy

DEPARTMENT OF REGULATORY AND ECONOMIC RESOURCES (RER)
BOARD AND CODE ADMINISTRATION DIVISION

NOTICE OF ACCEPTANCE (NOA)

CGI Windows & Doors, Inc.
10100 N. W. 25th Street
Miami, Fl. 33172

SCOPE:

This NOA is being issued under the applicable rules and regulations governing the use of construction materials. The documentation submitted has been reviewed and accepted by Miami-Dade County RER -Product Control Section to be used in Miami Dade County and other areas where allowed by the Authority Having Jurisdiction (AHJ).

This NOA shall not be valid after the expiration date stated below. The Miami-Dade County Product Control Section (In Miami Dade County) and/or the AHJ (in areas other than Miami Dade County) reserve the right to have this product or material tested for quality assurance purposes. If this product or material fails to perform in the accepted manner, the manufacturer will incur the expense of such testing and the AHJ may immediately revoke, modify, or suspend the use of such product or material within their jurisdiction. RER reserves the right to revoke this acceptance, if it is determined by Miami-Dade County Product Control Section that this product or material fails to meet the requirements of the applicable building code.

This product is approved as described herein, and has been designed to comply with the Florida Building Code, including the High Velocity Hurricane Zone.

DESCRIPTION: Series "Sentinel 165 Balcony Breeze" Single Inswing Aluminum door w/ SHW – LMI

APPROVAL DOCUMENT: Drawing No.**AD16-04**, titled "Series Sentinel 165 Balcony Breeze Aluminum Inswing Door", sheets 1 through 13 of 13, prepared by MCY Engineering, Inc., dated JUL 05, 2016, signed and sealed by Yiping Wang, P.E., bearing the Miami-Dade County Product Control Approval stamp with the Notice of Acceptance number and approval date by the Miami-Dade County Product Control Section.

MISSILE IMPACT RATING: Large and Small Missile Impact

Limitations:

1. See Design Pressure ratings and DLO (day light opening), in sheets **2**. See sheet 3 for the door and the SHW (Single Hung Window) glazing options.
2. The latch lock (item #M-20& #M-22) and 3-point CGI lock mechanism w/ dead bolts (item #M-21 & M-23) are integral part of each door w/SHW. Also the SHW is integral part of the single Door.
3. The Exterior lite of insulated laminated SHW using glazing option **B-1**, must be tempered, when used above 30' above the grade (Small Missile Impact area).

LABELING: Each unit shall bear a permanent label with the manufacturer's name or logo, city, state and series and following statement: "Miami-Dade County Product Control Approved", noted herein.

RENEWAL of this NOA shall be considered after a renewal application has been filed and there has been no change in the applicable building code negatively affecting the performance of this product.

TERMINATION of this NOA will occur after the expiration date or if there has been a revision or change in the materials, use, and/or manufacture of the product or process. Misuse of this NOA as an endorsement of any product, for sales, advertising or any other purposes shall automatically terminate this NOA. Failure to comply with any section of this NOA shall be cause for termination and removal of NOA.

ADVERTISEMENT: The NOA number preceded by the words Miami-Dade County, Florida, and followed by the expiration date may be displayed in advertising literature. If any portion of the NOA is displayed, then it shall be done in its entirety.

INSPECTION: A copy of this entire NOA shall be provided to the user by the manufacturer or its distributors and shall be available for inspection at the job site at the request of the Building Official.

This NOA consists of this page 1 and evidence pages E-1, as well as approval document mentioned above.

The submitted documentation was reviewed by **Ishaq I. Chanda, P.E.**

MIAMI-DADE COUNTY APPROVED

7/28/16

NOTICE OF ACCEPTANCE: EVIDENCE SUBMITTED

A. DRAWINGS

1. Manufacturer's die drawings and sections.
2. Drawing No.**AD16-04**, titled "Series Sentinel 165 Balcony Breeze Aluminum Inswing Door", sheets 1 through 13 of 13, prepared by MCY Engineering, Inc., dated JUL 05, 2016, signed and sealed by Yiping Wang, P.E.

B. TESTS

1. Test reports on: 1) Air Infiltration Test, per FBC, TAS 202-94
   2) Uniform Static Air Pressure Test, Loading per FBC TAS 202-94
   3) Water Resistance Test, per FBC, TAS 202-94
   4) Large Missile Impact Test per FBC, TAS 201-94
   5) Cyclic Wind Pressure Loading per FBC, TAS 203-94
   6) Forced Entry Test, per FBC 2411 3.2.1, TAS 202-94.

Along with manufacturer's parts and section drawing marked-up drawings of single aluminum Inswing door w/ SHW, prepared by Certified Testing Laboratories, Inc., Test Report No. **CTL 3076-1W**, dated 12/21/15 for specimen #4, 5, & 6, signed and sealed by Ramesh Patel, P.E.

Along with manufacturer's parts and section drawing marked-up drawings of single aluminum Outswing door w/ SHW, prepared by Certified Testing Laboratories, Inc., Test Report No. **CTL 3076W**, dated 12/20/15 for specimen #1, 2, & 3, signed and sealed by Ramesh Patel, P.E.
(Note: The above test reports have been revised by an addendum letter issued by Certified Testing lab dated June 27, 2016, signed and sealed by Ramesh Patel, P.E.)

2. REF test report HTL 0080-912-97 per SFBC PA 202, 201/203-94.

C. CALCULATIONS

1. Anchor verification calculations and structural analysis, complying with FBC-2014(**5th Edition**), prepared by MCY Engineering, Inc., dated MAR 18, 2016, signed and sealed by Yiping Wang, P.E.
2. Glazing complies w/ ASTME-1300-02, -04 & -09.

D. QUALITY ASSURANCE

1. Miami Dade Department of Regulatory and Economic Resources (RER).

E. MATERIAL CERTIFICATIONS

1. Notice of Acceptance No. **14-0916.11** issued to Kuraray America, Inc. (former E.I. DuPont DeNemours & Co., Inc.) for the "**Sentry Glass ® Interlayer**", expiring on 07/4/17.
2. Notice of Acceptance No. **14-0916.10** issued to Kuraray America, Inc. (former E.I. DuPont DeNemours & Co., Inc.) for "Kuraray **Butacite PVB Interlayer**", expiring on 12/11/16.
3. Notice of Acceptance No. **14–0423.15** issued to Eastman Chemical Company (MA) (Former Solutia, Inc.) for the "**Saflex CP - Saflex and Saflex HP Composite Glass Interlayers w/ PET Core**", expiring on 12/11/18.

F. STATEMENTS

1. Statement letter of conformance to FBC 2014(**5th Edition**) and letter of no financial interest, prepared by MCY Engineering, Inc., dated MAR 14, 2016, signed and sealed by Yiping Wang, P.E.
2. Lab compliance and addendum letters, as part of the above referenced test reports.

G. OTHER

1. Test proposal dated 03/21/15 approved by RER.

Ishaq I. Chanda

Ishaq I. Chanda, P.E.
Product Control Examiner
NOA No 16-0329.02
Expiration Date: July 28, 2021
Approval Date: July 28, 2016

GENERAL NOTES:

- THIS PRODUCT HAS BEEN DESIGNED AND TESTED TO COMPLY WITH THE REQUIREMENTS OF THE 5TH EDITION FLORIDA BUILDING CODE (2014) INCLUDING HIGH VELOCITY HURRICANE ZONE (HVHZ).
- PRODUCTS RATED FOR LARGE MISSILE IMPACT & SMALL MISSILE IMPACT. IMPACT SHUTTERS ARE NOT REQUIRED.
- DOORS ARE APPROVED FOR AIR AND WATER INFILTRATION.
- ANCHORS SHALL BE AS LISTED, SPACED AS SHOWN ON DETAILS. ANCHORS EMBEDMENT TO BASE MATERIAL SHALL BE BEYOND WALL DRESSING OR STUCCO.
- ANCHORING OR LOADING CONDITIONS NOT SHOWN IN THESE DETAILS ARE NOT PART OF THIS APPROVAL.
- MATERIALS INCLUDING BUT NOT LIMITED TO STEEL/METAL SCREWS THAT COME INTO CONTACT WITH OTHER DISSIMILAR MATERIALS SHALL MEET THE REQUIREMENTS OF THE 5TH EDITION FLORIDA BUILDING CODE (2014) SECTION AS APPLICABLE.
- METAL STRUCTURES NOT BY CGI WINDOWS AND DOORS, INC. TO BE DESIGNED TO SUPPORT THE LOADS IMPOSED BY THIS GLAZING SYSTEM AND TO TRANSFER SUCH LOADS TO THE BUILDING STRUCTURAL MEMBERS, TO BE REVIEWED BY BUILDING OFFICIAL.
- THE DESIGN LOADS SHOWN IN THIS DOCUMENT ARE ALLOWABLE DESIGN LOADS. ULTIMATE LOAD OBTAINED FROM ASCE 7-10, MULTIPLY BY 0.6 SHALL BE LESS THAN OR EQUAL TO MAX. DESIGN LOAD IN THIS DOCUMENT.

NOTE:
GLASS COMPLIES WITH ASTM E1300-09 (3 SEC. GUSTS).

ABBREVIATIONS AND SYMBOLS

D.L.O. - DAYLITE OPENING
S.H. - SINGLE HUNG

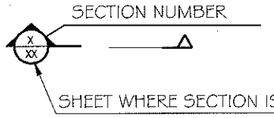

TYPICAL ANCHORS:

SEE ELEVATIONS FOR SPACING

TYPE 'A' 1/4" DIA. ULTRACON BY 'ELCO' (Fu=177 KSI, Fy=155 KSI)
INTO 2BY WOOD BUCKS OR WOOD STRUCTURES
1-1/2" MIN. PENETRATION INTO WOOD

THRU WOOD BUCKS INTO CONC. OR MASONRY
1-1/4" MIN. EMBED INTO CONCRETE OR HOLLOW BLOCK (JAMB ONLY)
1-3/4" MIN. EMBED INTO GROUT FILLED BLOCK OR HOLLOW BLOCK

THRU WOOD BUCKS INTO CONC. OR MASONRY (HEAD)
DIRECTLY INTO CONCRETE W/ 1-1/4" MIN. EMBEDMENT

DIRECTLY INTO CONCRETE W/ 1-1/4" MIN. EMBEDMENT (SILL)

TYPE 'B' #14 SMS OR SELF DRILLING SCREWS (GRADE 2 CRS)
INTO MIAMI-DADE COUNTY APPROVED MULLIONS
INTO METAL STRUCTURE.
STEEL : 12 GA. MIN. (Fy = 36 KSI MIN.)
ALUMINUM : 1/8" THK. MIN. (6063-T5 MIN.)
STEEL IN CONTACT WITH ALUMINUM TO BE PLATED OR PAINTED)

TYPICAL EDGE DISTANCE

INTO CONCRETE AND MASONRY = 2-1/2" MIN.
INTO WOOD STRUCTURE = 1" MIN.
INTO METAL STRUCTURE = 3/4" MIN.

CONCRETE f'c = 3000 PSI MIN.
MASONRY:
C-90 HOLLOW/FLLED BLOCK f'm = 2000 PSI MIN.
GROUT FILLED BLOCK f'm = 2000 PSI MIN.

-SEALANTS:
ALL FRAME CORNERS, JOINTS, MULLION SEAMS AND PERIMETER GLAZING BEAD TO FRAME INSTALLATION FASTENERS SEALED WITH SILICON SEALANT.

1X OR 2X WOOD BUCKS NOT BY CGI WINDOWS AND DOORS, INC. MUST BE PROPERLY SECURED TO SUSTAIN LOADS IMPOSED BY GLAZING SYSTEM AND TRANSFER THEM TO THE BUILDING STRUCTURE.

MIAMI-DADE COUNTY
Approved as complying with the Florida Building Code
Date July 28, 2016
NOA# 16-0329.02
Miami Dade Product Control
By Ishwar L. Chand

YIPING WANG, P.E.
FLORIDA REGISTRATION
FL #55983
C.A.N. 28677
No. 55983
STATE OF FLORIDA
PROFESSIONAL ENGINEER

JUL 05 2016

REVISIONS		
NO.	DATE	DESCRIPTION

MCY ENGINEERING, INC.
GLAZING CONSULTANTS
8501 SW 124Ave.Ste.205A
MIAMI, FL 33183
P: 305.271.0117
F: 305.279.6818
www.MCYEngineering.com
MCY.Engineering@Att.net

SERIES SENTINEL 165 'BALCONY BREEZE' ALUMINUM INSWING DOOR (LMI / SMI)

CGI Windows and Doors, Inc.
10100 N.W. 25th Street, Miami, FL 33172
Tel: 305.593.6590 | Fax: 305.593.6592

COVER

DATE	3-11-16
SCALE	-
DRAWN	-
PROJECT	MCY 16-010

DRAWING NO.
AD16-04

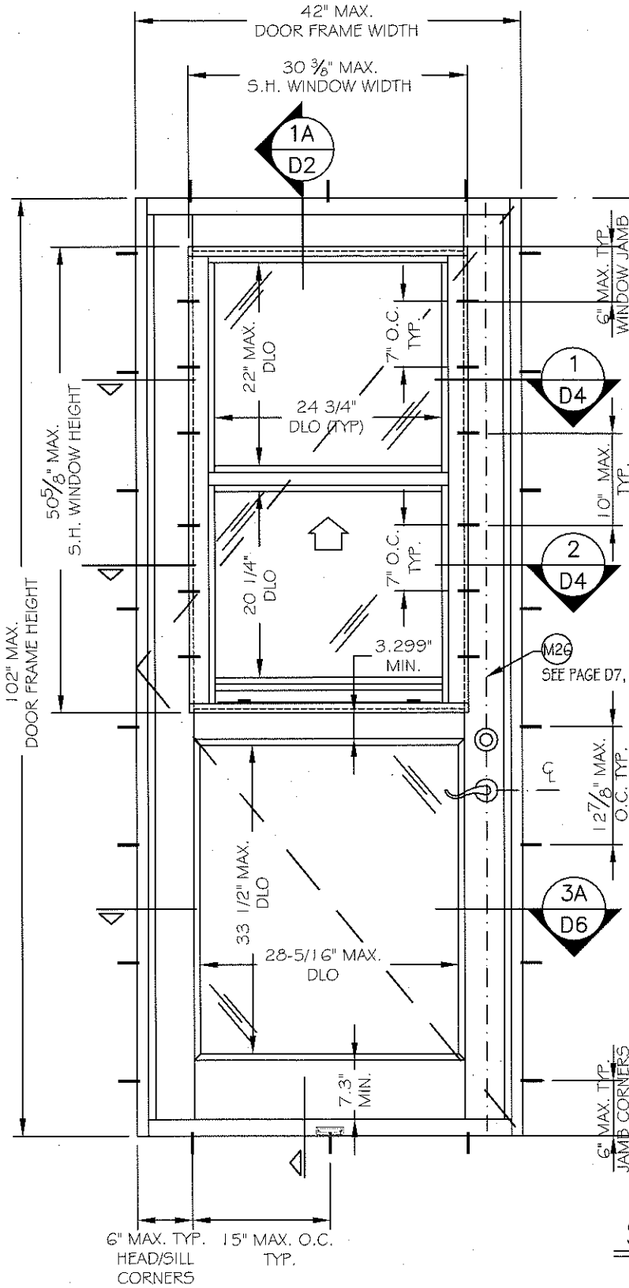

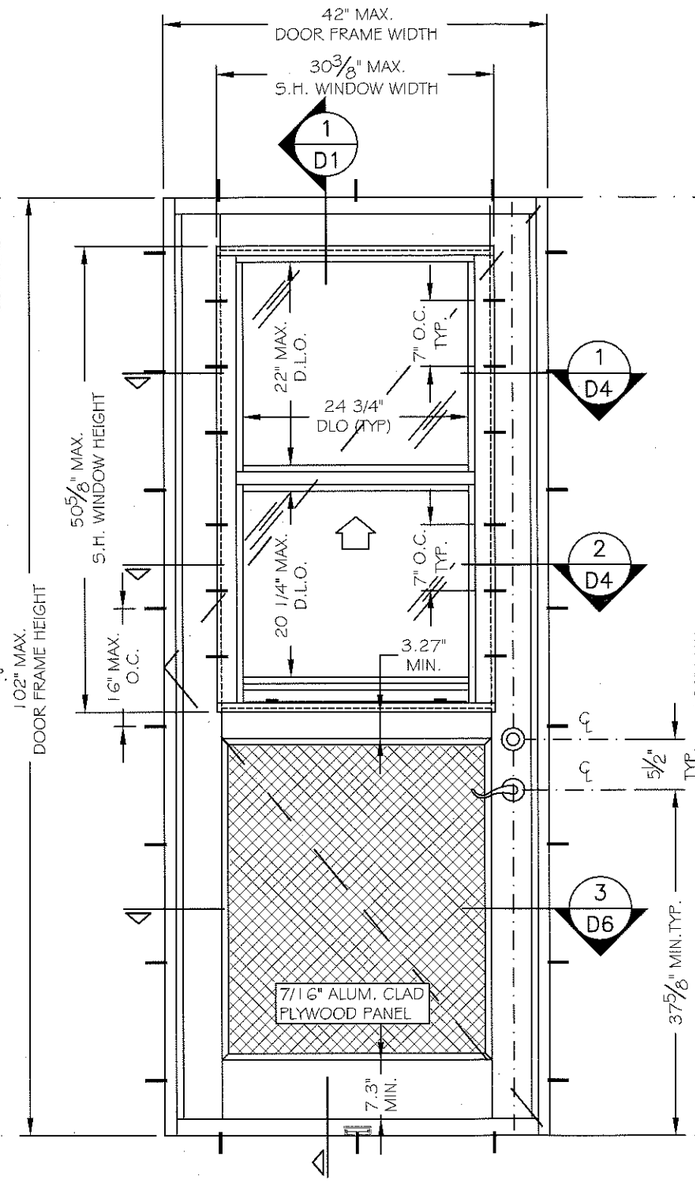

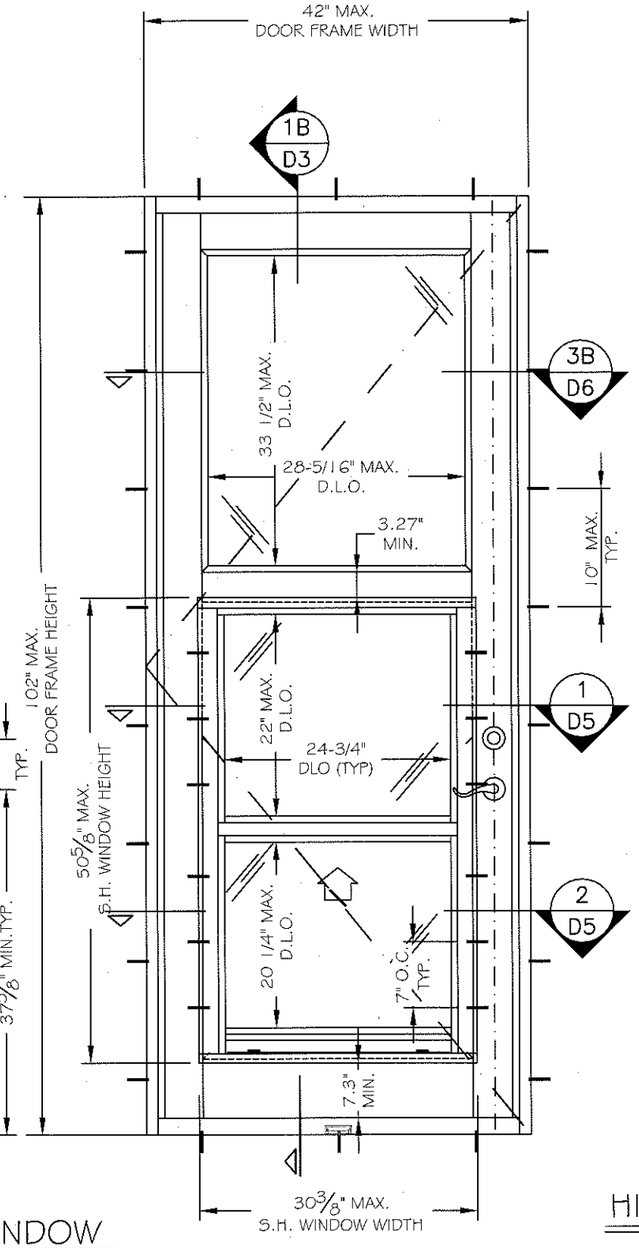

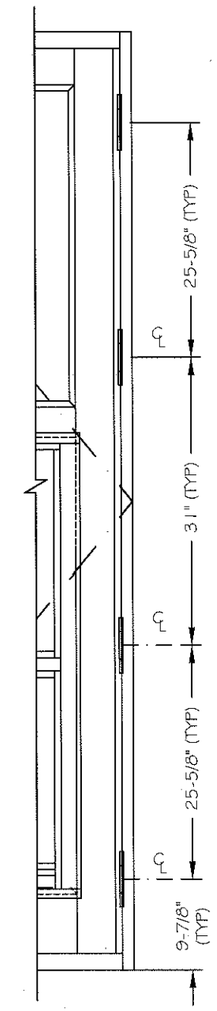

HINGE LOCATION

INTERIOR VIEW

SINGLE INSWING DOOR W/ SINGLE HUNG WINDOW

TYPICAL EXTERIOR ELEVATIONS

ALLOWABLE DESIGN LOAD
+ 90 PSF
- 110 PSF

SEE SHEET 3 FOR GLASS OPTIONS FOR DOOR AND SINGLE HUNG WINDOW

MIAMI-DADE COUNTY

Approved as complying with the Florida Building Code
Date July 26, 2016
NOA# 16-0329.02
Miami Dade Product Control
By Sheryl Chaunt

YIPING WANG, P.E.
FLORIDA REGISTRATION
FL #55983
C.A.N. 28677
No. 55983
STATE OF FLORIDA
PROFESSIONAL ENGINEER

JUL 05 2016

REVISIONS		
NO.	DATE	DESCRIPTION

MCY ENGINEERING, INC.
GLAZING CONSULTANTS
8501 SW 124Ave.Ste.205A
MIAMI, FL 33183
P: 305.271.0117
F: 305.279.6818
www.MCYEngineering.com
MCY.Engineering@Att.net

SERIES SENTINEL 165 'BALCONY BREEZE' ALUMINUM INSWING DOOR (LMI / SMI)

CGI Windows and Doors, Inc.
10100 N.W. 25th Street, Miami, FL 33172
Tel: 305.593.6590 | Fax: 305.593.6592

E1

DATE	3-11-16
SCALE	1:16
DRAWN	-
PROJECT	MCY 16-010

DRAWING NO.
AD16-04

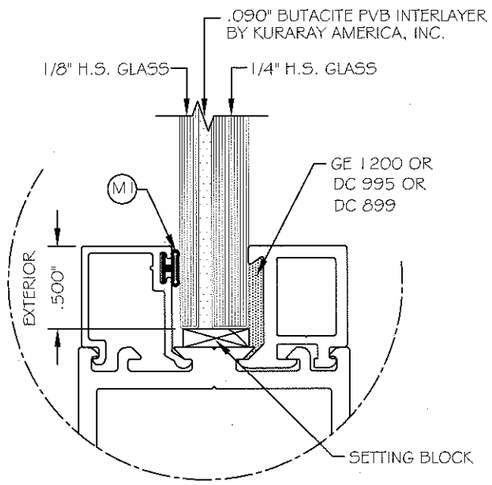

GLASS TYPE AB
7/16" OVERALL THICKNESS

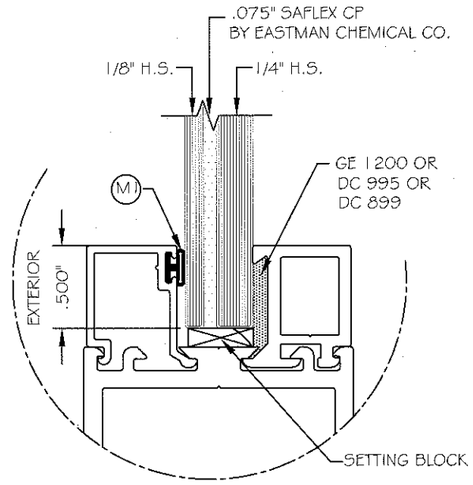

GLASS TYPE ACP
7/16" OVERALL THICKNESS

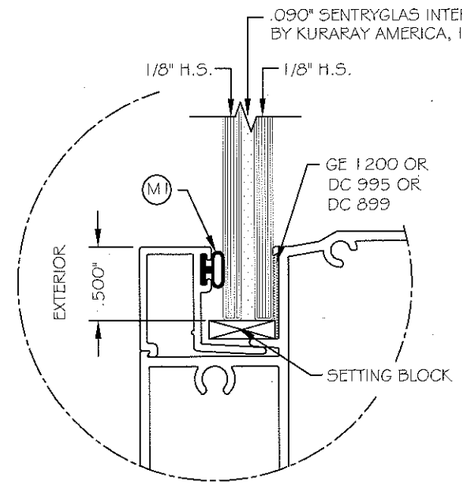

GLASS TYPE BS
5/16" OVERALL THICKNESS

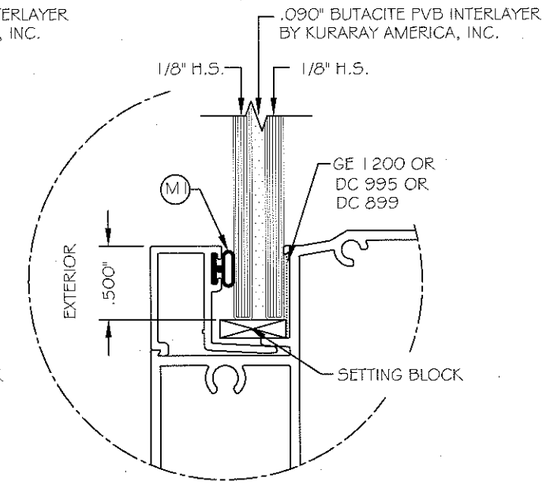

GLASS TYPE BB
5/16" OVERALL THICKNESS

Approved as complying with the Florida Building Code
Date JUL 26, 2016
NOA# 16-0329.02
Miami Dade Product Control
By

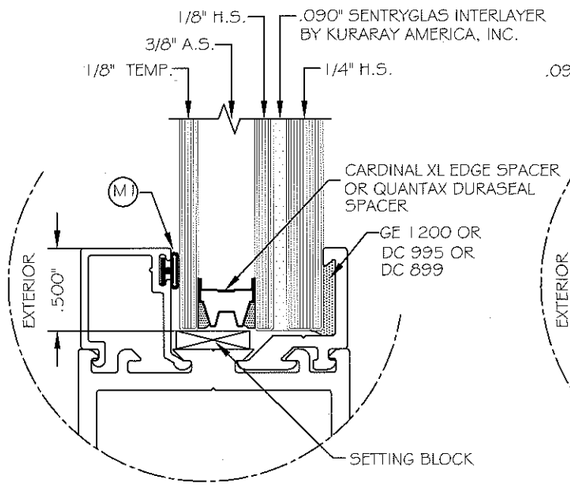

GLASS TYPE A1
1" OVERALL THICKNESS

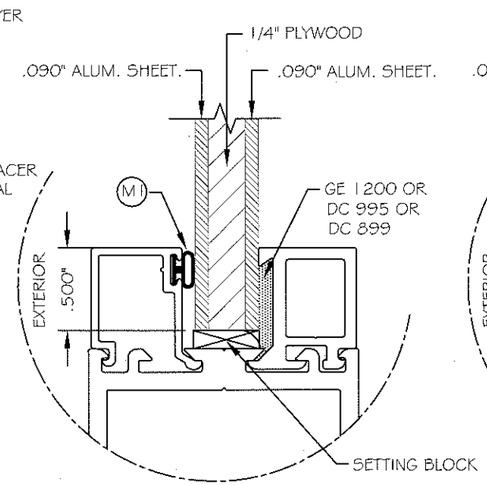

ALUM. CLAD PLYWOOD
7/16" OVERALL THICKNESS

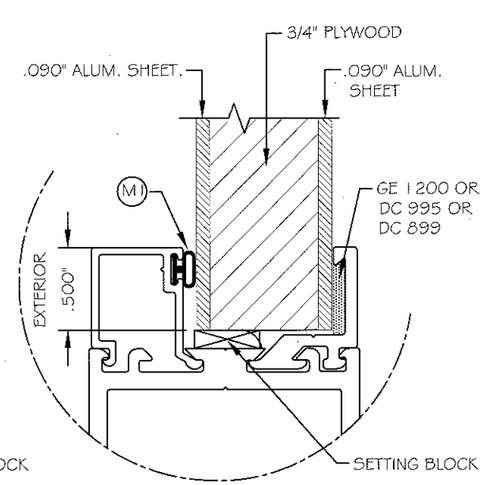

ALUM. CLAD PLYWOOD
1" OVERALL THICKNESS

DOOR PANEL GLAZING DETAILS & OPTIONS

NOTE:
GLASS COMPLIES WITH ASTM E1300-09 (3 SEC. GUSTS).

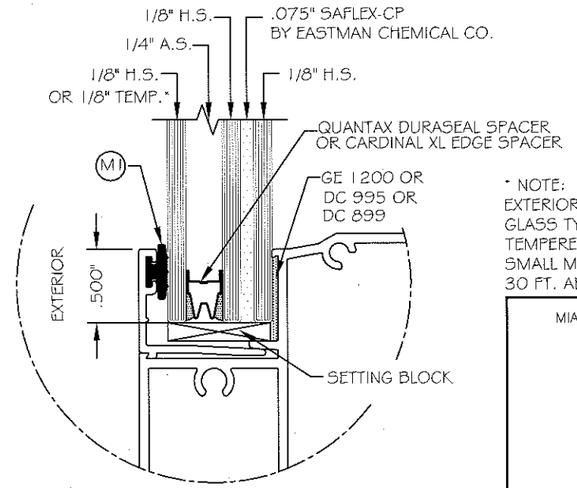

GLASS TYPE B1
0.7" OVERALL THICKNESS

SINGLE HUNG WINDOW GLAZING DETAILS
& OPTIONS

NOTE:
GLASS COMPLIES WITH ASTM E1300-09
(3 SEC. GUSTS).

* NOTE:
EXTERIOR PLY OF INSULATED GLASS TYPE MUST BE TEMPERED WHEN USED AT SMALL MISSILE IMPACT AREA, 30 FT. ABOVE GRADE.

MIAMI-DADE COUNTY

YIPING WANG, P.E.
FLORIDA REGISTRATION
FL #55983
C.A.N. 28677
No. 55983
STATE OF FLORIDA
PROFESSIONAL ENGINEER

JUL 05 2016

REVISIONS		
NO.	DATE	DESCRIPTION

MCY ENGINEERING, INC.
GLAZING CONSULTANTS
8501 SW 124 Ave. Ste. 205A
MIAMI, FL 33183
P: 305.271.0117
F: 305.279.6818
www.MCYEngineering.com
MCY.Engineering@Att.net

SERIES SENTINEL 165 'BALCONY BREEZE' ALUMINUM INSWING DOOR (LMI / SMI)

CGI Windows and Doors, Inc.
10100 N.W. 25th Street, Miami, FL 33172
Tel: 305.593.6590 | Fax: 305.593.6592

G1

DATE	3-11-16
SCALE	1:1
DRAWN	–
PROJECT	MCY 16-010

DRAWING NO.
AD16-04

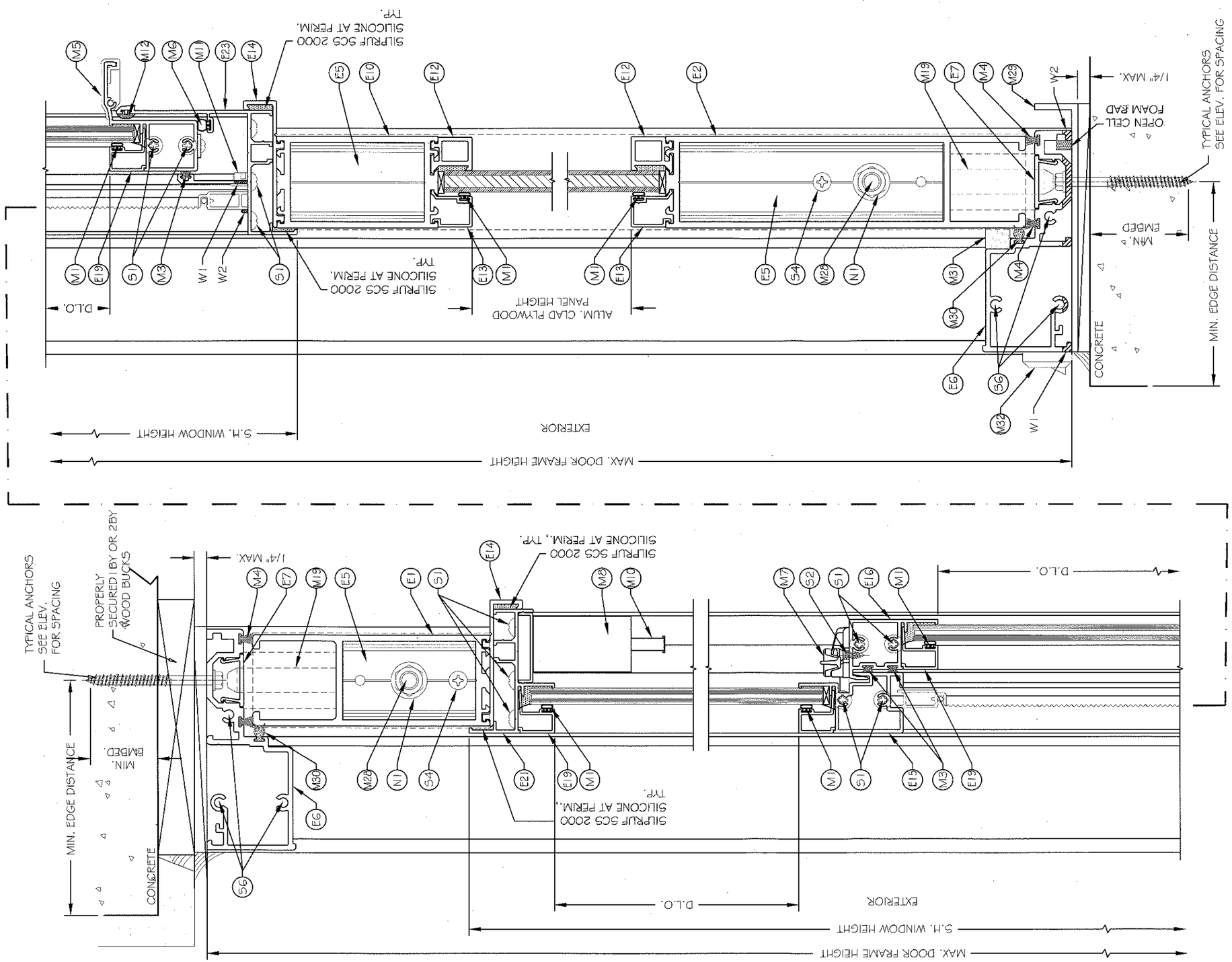

1 D1 VERTICAL SECTION

MIAMI-DADE COUNTY

Approved as complying with the Florida Building Code
Date July 26, 2016
NOA# 16-0329.02
Miami Dade Product Control
By

YIPING WANG, P.E.
FLORIDA REGISTRATION
FL#55983
C.A.N. 28677
No. 55983
STATE OF FLORIDA
PROFESSIONAL ENGINEER

JUL 05 2016

REVISIONS	
NO.	DATE	DESCRIPTION

MCY ENGINEERING, INC.
GLAZING CONSULTANTS
8501 SW 124Ave.Ste.205A
MIAMI, FL. 33183
P: 305.271.0117
F: 305.279.6818
www.MCYEngineering.com
MCY.Engineering@Att.net

SERIES SENTINEL 165 'BALCONY BREEZE' ALUMINUM INSWING DOOR (LMI / SMI)

CGI Windows and Doors, Inc.
10100 N.W. 25th Street, Miami, FL 33172
Tel: 305.593.6590 | Fax: 305.593.6592

D1

DATE	3-11-16
SCALE	1:2
DRAWN	-
PROJECT	MCY 16-010

DRAWING NO.
AD16-04

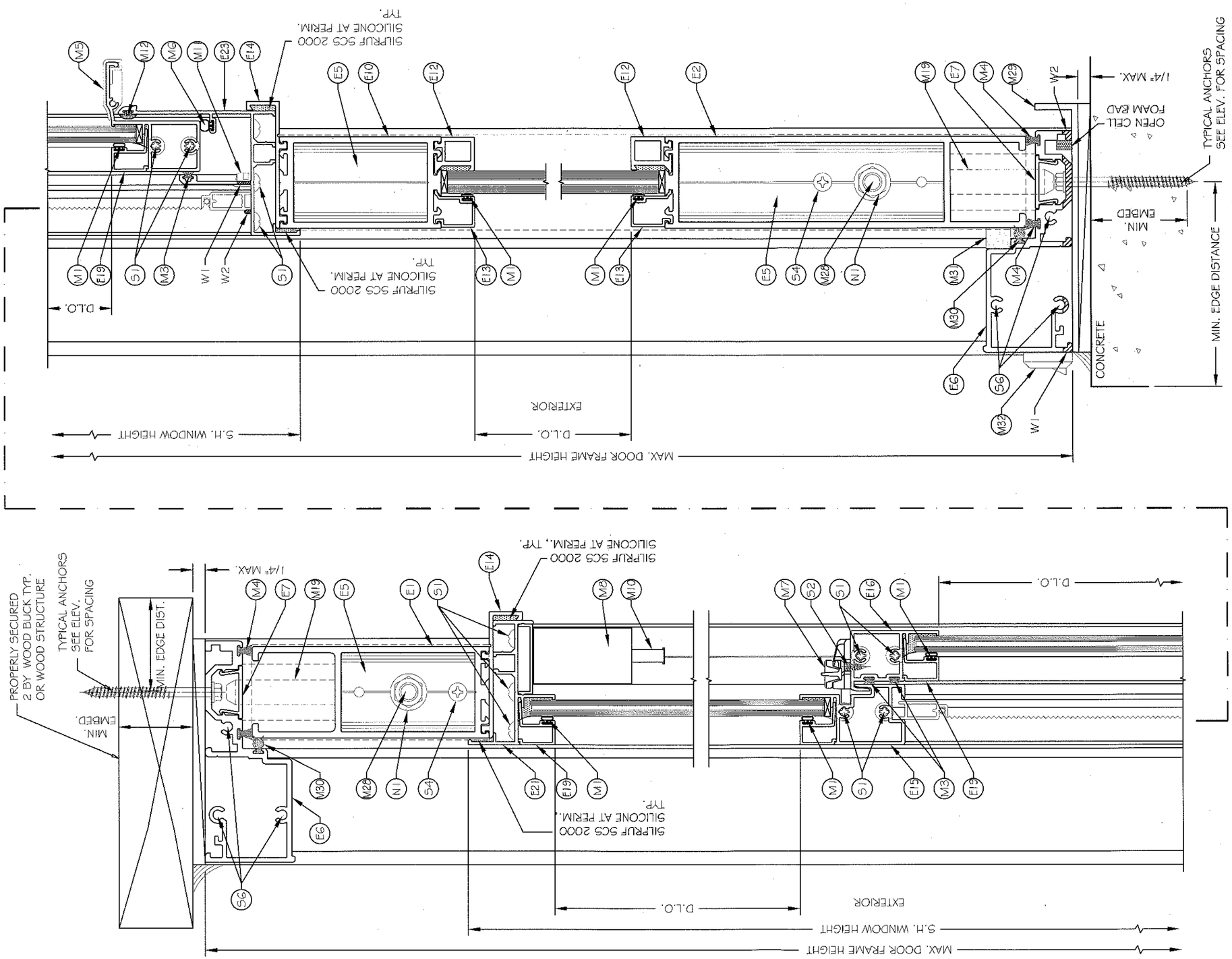

1A D2 VERTICAL SECTION

MIAMI-DADE COUNTY

Approved as complying with the Florida Building Code
Date July 28, 2016
NOA# 16-0329.02
Miami Dade Product Control

YIPING WANG, P.E.
FLORIDA REGISTRATION
EL #55983
C.A.N. 28677
No. 55983
STATE OF FLORIDA
PROFESSIONAL ENGINEER

REVISIONS	
NO. DATE	DESCRIPTION

MCY ENGINEERING, INC.
GLAZING CONSULTANTS
8501 SW 124Ave.Ste.205A
MIAMI, FL 33183
P: 305.271.0117
F: 305.279.6818
www.MCYEngineering.com
MCY.Engineering@Att.net

SERIES SENTINEL 165 'BALCONY BREEZE' ALUMINUM INSWING DOOR (LMI / SMI)

CGI Windows and Doors, Inc.
10100 N.W. 25th Street, Miami, FL 33172
Tel: 305.593.6590 | Fax: 305.593.6592

D2

DATE	3-11-16
SCALE	1:2
DRAWN	-
PROJECT	MCY 16-010

DRAWING NO.
AD16-04

JUL 05 2016

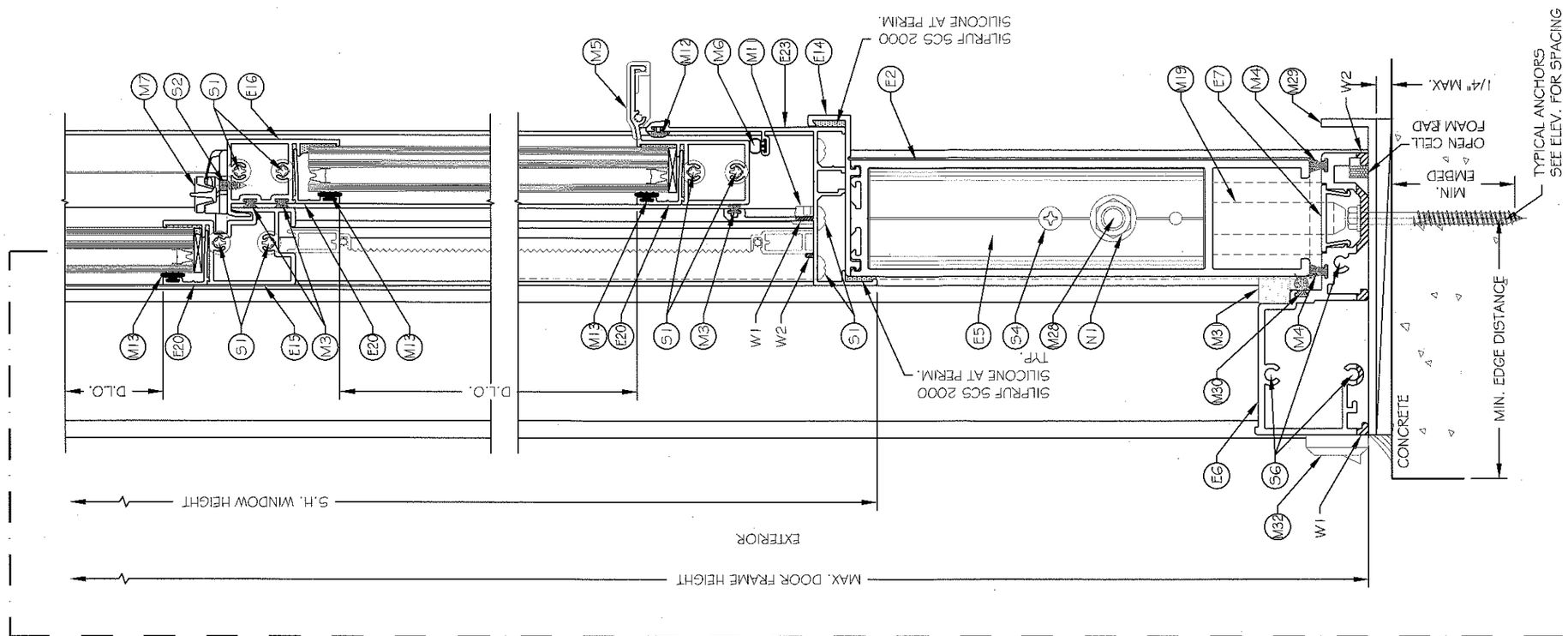

1B D3 VERTICAL SECTION

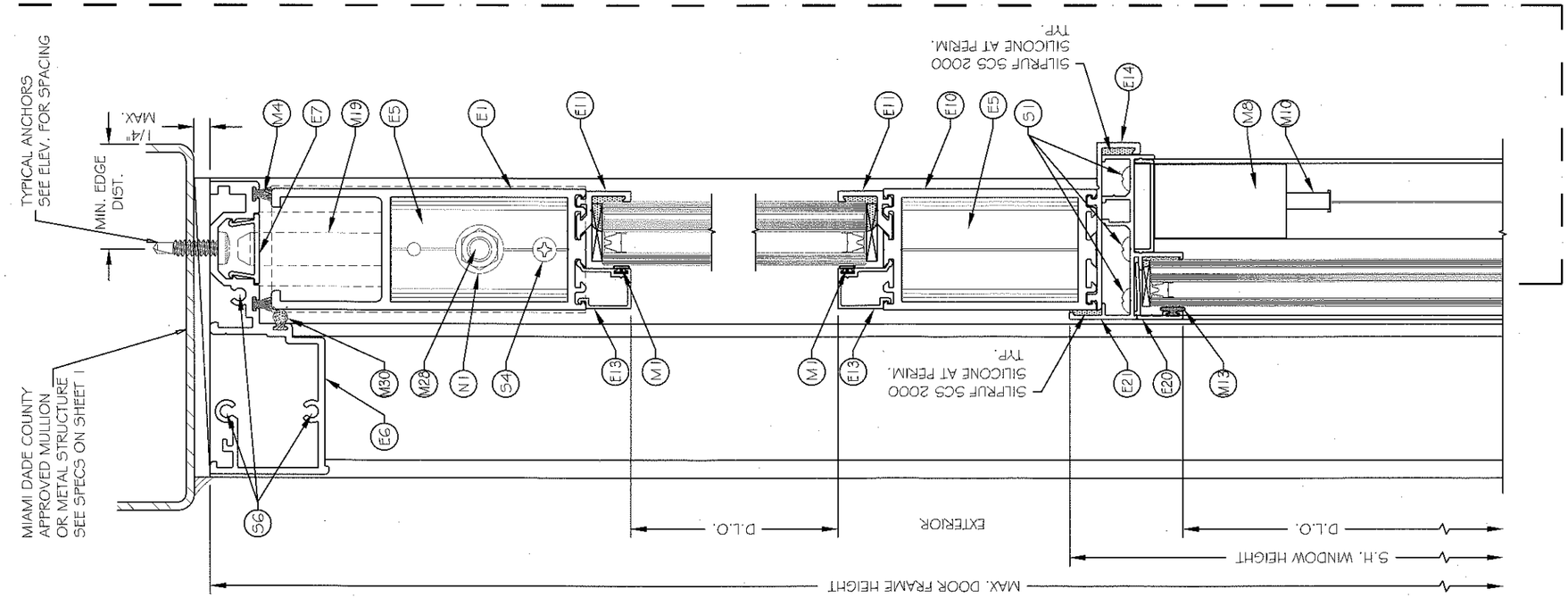

Approved as complying with the Florida Building Code
Date JUL 28, 2016
NOA# 16-0329.02
Miami Dade Product Control
By

MIAMI-DADE COUNTY

YIRING WANG, P.E.
FLORIDA REGISTRATION
FL #55983
C.A.N. 28677
No. 55983
STATE OF FLORIDA
PROFESSIONAL ENGINEER

REVISIONS	
NO.DATE	DESCRIPTION

MCY ENGINEERING, INC.
GLAZING CONSULTANTS
8501 SW 124Ave.Ste.205A
MIAMI, FL 33183
P: 305.271.0117
F: 305.279.6818
www.MCYEngineering.com
MCY.Engineering@Att.net

SERIES SENTINEL 165 'BALCONY BREEZE' ALUMINUM INSWING DOOR (LMI / SMI)

CGI Windows and Doors, Inc.
10100 N.W. 25th Street, Miami, FL 33172
Tel: 305.593.6590 | Fax: 305.593.6592

D3

DATE	3-11-16
SCALE	1:2
DRAWN	-
PROJECT	MCY 16-010

DRAWING NO.
AD16-04

JUL 05 2016

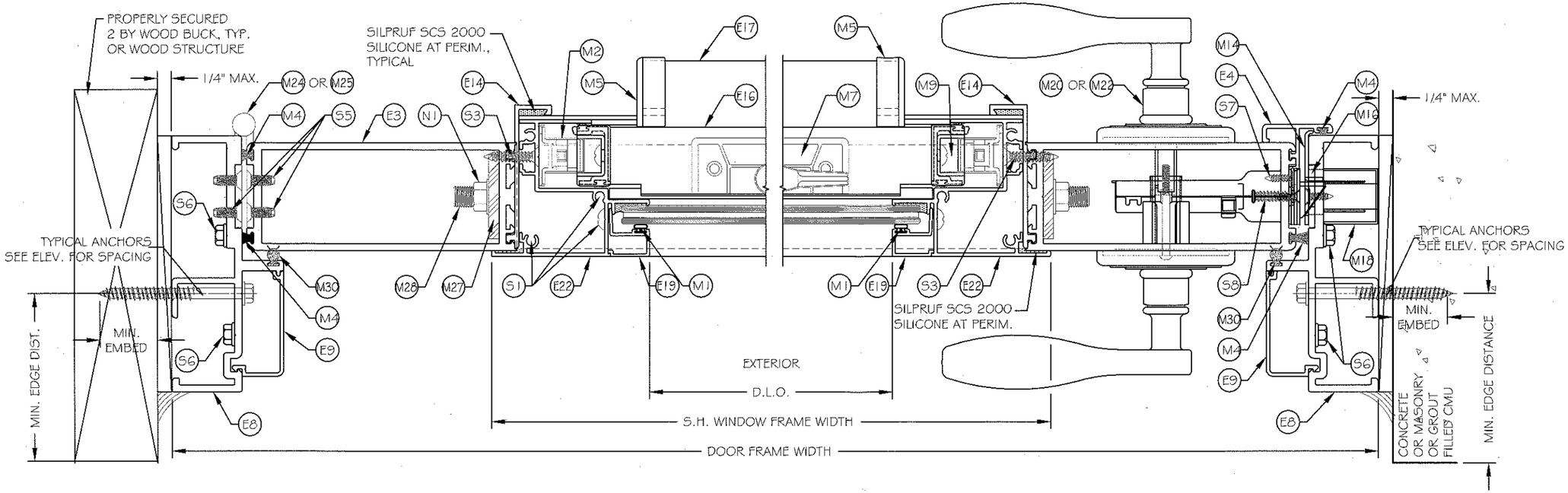

1 / D4 HORIZONTAL SECTION

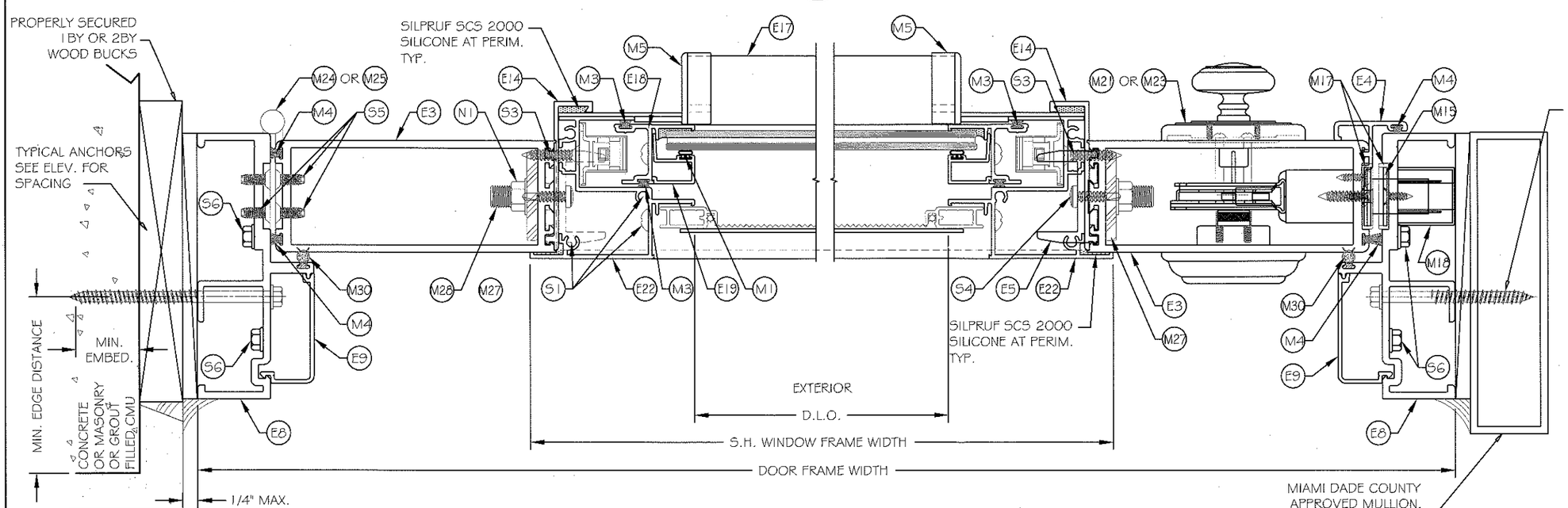

2 / D4 HORIZONTAL SECTION

Approved as complying with the Florida Building Code
Date Jul 28, 2016
NOA# 16-0329.02
Miami Dade Product Control
By

MIAMI-DADE COUNTY

YIPING WANG, P.E.
FLORIDA REGISTRATION
FL #55983
C.A.N. 28677

STATE OF FLORIDA

JUL 05 2016

REVISIONS		
NO	DATE	DESCRIPTION

MCY ENGINEERING, INC.
GLAZING CONSULTANTS
8501 SW 124Ave.Ste.205A
MIAMI, FL. 33183
P: 305.271.0117
F: 305.279.6818
www.MCYEngineering.com
MCY.Engineering@Att.net

CGI Windows and Doors, Inc.
10100 N.W. 25th Street, Miami, FL 33172
Tel: 305.593.6590 | Fax: 305.593.6592

SERIES SENTINEL 165 'BALCONY BREEZE' ALUMINUM INSWING DOOR (LMI / SMI)

D4

DATE	3-11-16
SCALE	1:2
DRAWN	-
PROJECT	MCY 16-010

DRAWING NO.
AD16-04

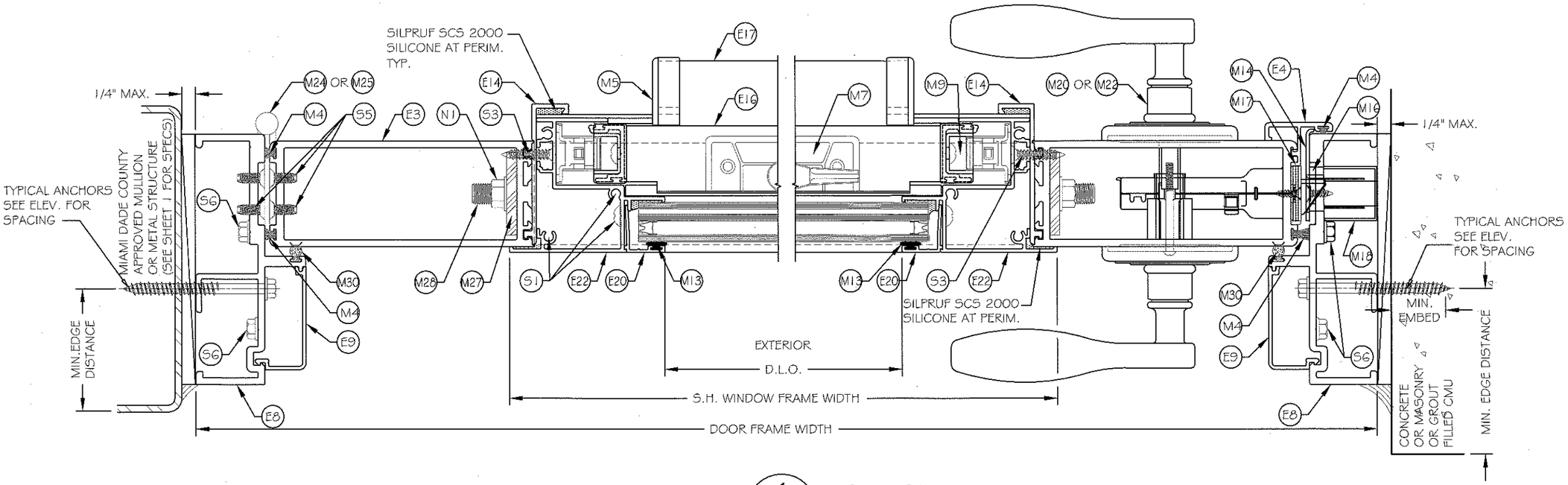

1/D5 HORIZONTAL SECTION

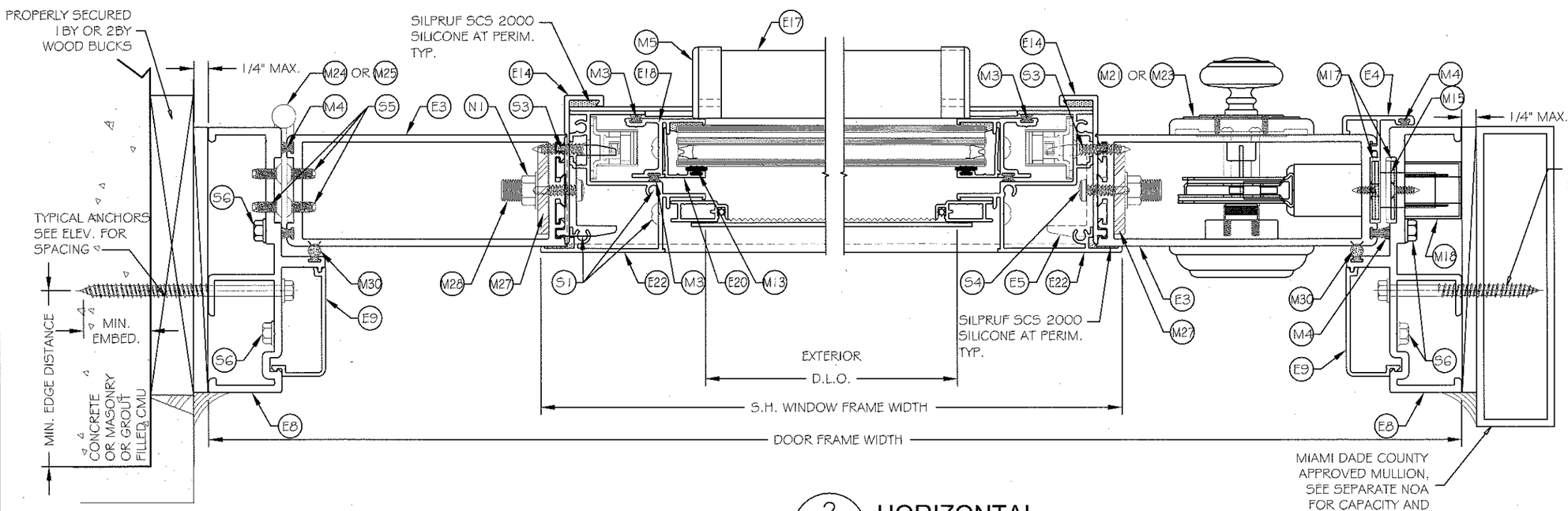

2/D5 HORIZONTAL SECTION

Approved as complying with the Florida Building Code
Date July 28, 2016
NOA# 16-0329.02
Miami Dade Product Control
By Shang Li Chang

MIAMI-DADE COUNTY

YIPING WANG, P.E.
FLORIDA REGISTRATION
FL #55983
C.A.N. 28677
STATE OF FLORIDA
PROFESSIONAL ENGINEER

REVISIONS		
NO.	DATE	DESCRIPTION

MCY ENGINEERING, INC.
GLAZING CONSULTANTS
8501 SW 124 Ave. Ste. 205A
MIAMI, FL 33183
P: 305.271.0117
F: 305.279.6618
www.MCYEngineering.com
MCY.Engineering@Att.net

SERIES SENTINEL 165 'BALCONY BREEZE' ALUMINUM INSWING DOOR (LMI / SMI)

CGI Windows and Doors, Inc.
10100 N.W. 25th Street, Miami, FL 33172
Tel: 305.593.6590 | Fax: 305.593.6592

D5

DATE	3-11-16
SCALE	1:2
DRAWN	-
PROJECT	MCY 16-010

DRAWING NO.
AD16-04

JUL 05 2016

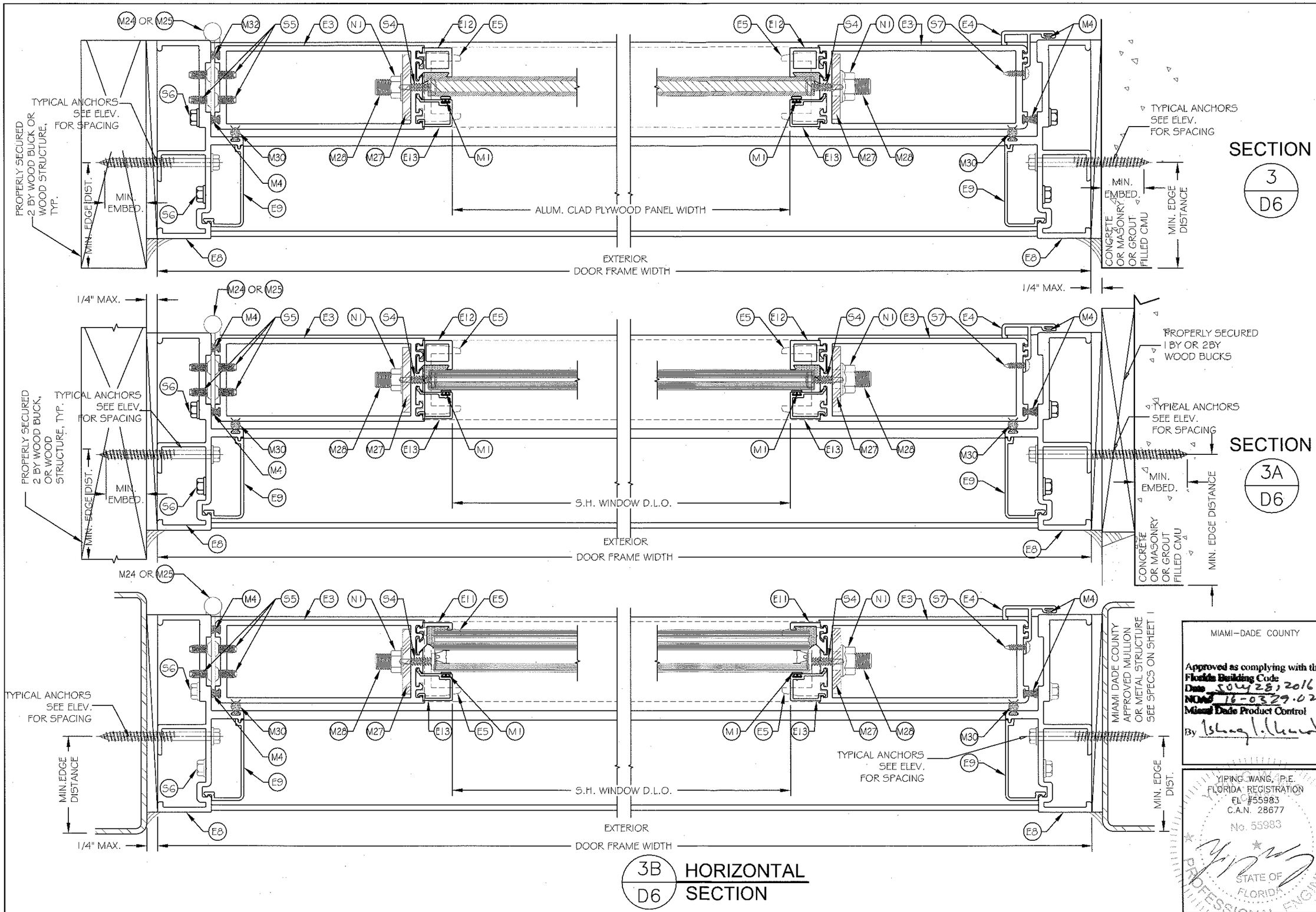

3B / D6 HORIZONTAL SECTION

SECTION 3 / D6

SECTION 3A / D6

MIAMI-DADE COUNTY

Approved as complying with the Florida Building Code
Date JULY 28, 2016
NOA 16-0329.02
Miami Dade Product Control
By

YIPING WANG, P.E.
FLORIDA REGISTRATION
FL #55983
C.A.N. 28677
No. 55983
STATE OF FLORIDA
PROFESSIONAL ENGINEER

REVISIONS

NO.	DATE	DESCRIPTION

MCY ENGINEERING, INC.
GLAZING CONSULTANTS
8501 SW 124Ave.Ste.205A
MIAMI, FL 33183
P: 305.271.0117
F: 305.279.6818
www.MCYEngineering.com
MCY.Engineering@Att.net

SERIES SENTINEL 165 'BALCONY BREEZE' ALUMINUM INSWING DOOR (LMI / SMI)

CGI Windows and Doors, Inc.
10100 N.W. 25th Street, Miami, FL 33172
Tel: 305.593.6590 | Fax: 305.593.6592

D6

DATE	3-11-16
SCALE	1:2
DRAWN	-
PROJECT	MCY 16-010

DRAWING NO.
AD16-04

JUL 05 2016

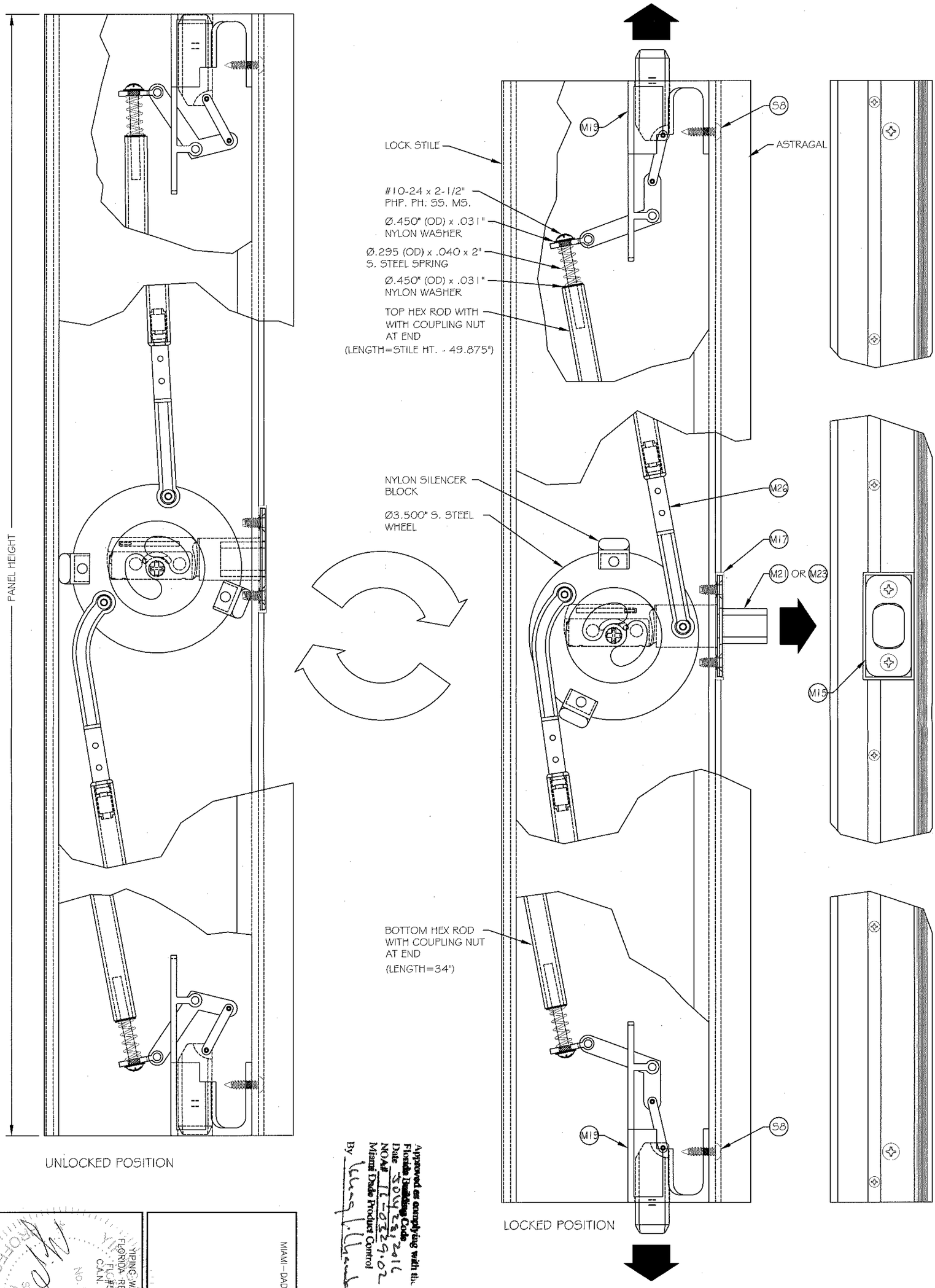

UNLOCKED POSITION

LOCKED POSITION

Approved as complying with the Florida Building Code
Date 30 Aug 2016
NOA# 16-0329.02
Miami Dade Product Control
By [signature]

PROPRIETARY THREE-POINT LOCK MECHANISM DETAIL

YIPING WANG, P.E.
FLORIDA REGISTRATION
FL# 55983
C.A.N. 28677
No. 55983
STATE OF FLORIDA
PROFESSIONAL ENGINEER

MIAMI-DADE COUNTY

JUL 05 2016

10 OF 13	DRAWING NO. AD16-04	PROJECT MCY 16-010	DRAWN -
SCALE 1:2	DATE 3-11-16	D7	

SERIES SENTINEL 165 'BALCONY BREEZE' ALUMINUM INSWING DOOR (LMI / SMI)

CGI Windows and Doors, Inc.
10100 N.W. 25th Street, Miami, FL 33172
Tel: 305.593.6590 | Fax: 305.593.6592

MCY ENGINEERING, INC.
GLAZING CONSULTANTS
8501 SW 124Ave.Ste.205A
MIAMI, FL 33183
P: 305.271.0117
F: 305.279.6818
www.MCYEngineering.com
MCY.Engineering@Att.net

REVISIONS		
NO.	DATE	DESCRIPTION

BILL OF MATERIALS

ITEM	PART No.	QUANTITY	DESCRIPTION	MATERIAL	SUPPLIER
E1	CGI-500A	1	DOOR PANEL TOP RAIL	6063-T6	KEYMARK
E2	CGI-501	1	DOOR PANEL BOTTOM RAIL	6063-T6	KEYMARK
E3	CGI-502	2	DOOR PANEL VERTICAL STILE	6063-T6	KEYMARK
E4	CGI-505	1	ASTRAGAL	6063-T5	KEYMARK
E5	CGI-506	6	SHEAR BLOCK	6063-T6	KEYMARK
E6	CGI-507	2	DOOR FRAME HEAD / SILL	6063-T6	KEYMARK
E7	CGI-508	2	DOOR FRAME HEAD / SILL SCREW CAP	6063-T5	KEYMARK
E8	CGI-509	2	DOOR FRAME JAMB	6063-T6	KEYMARK
E9	CGI-511	2	JAMB SCREW COVER	6063-T5	KEYMARK
E10	CGI-514	1	TRUE MUNTIN (4-5/8")	6063-T5	KEYMARK
E11	CGI-515	AS REQD.	GLAZING ADAPTOR (INSUL.-LAM. GLASS)	6063-T6	KEYMARK
E12	CGI-519	AS REQD.	GLAZING ADAPTOR (7/16" LAM. / SOLID PANEL)	6063-T6	KEYMARK
E13	CGI-396	AS REQD.	GLAZING BEAD (7/16" LAM. / INSUL.-LAM. GLASS)	6063-T5	KEYMARK
E14	CGI-1061	4/DOOR	WINDOW FILLER	6063-T6	KEYMARK
E15	CGI-103	1	WINDOW FIXED MEETING RAIL	6063-T6	KEYMARK
E16	CGI-104	1	WINDOW LOCK RAIL	6063-T6	KEYMARK
E17	CGI-105	1	WINDOW HANDLE RAIL	6063-T6	KEYMARK
E18	CGI-106	2	WINDOW SASH RAIL	6063-T6	KEYMARK
E19	CGI-107	AS REQD.	GLAZING BEAD (5/16" LAM. GLASS)	6063-T5	KEYMARK
E20	CGI-108	AS REQD.	GLAZING BEAD (3/4" INSUL.-LAM. GLASS)	6063-T5	KEYMARK
E21	CGI-135	1	WINDOW FRAME HEAD	6063-T6	KEYMARK
E22	CGI-136	2	WINDOW FRAME JAMB	6063-T6	KEYMARK
E23	CGI-137	1	WINDOW FRAME SILL	6063-T6	KEYMARK
M1	382V	AS REQD.	GLAZING BULB (DUROMETER 75/80 SHORE A)	PVC	MELTPOINT
M2	BL-110-2340	2/WINDOW	BLOCK & TACKLE BALANCE	-	BSI
M3	W23201	AS REQD.	.187" x 200" ULTRA-FIN WEATHERSTRIP	-	ULTRAFAB
M4	W33321	AS REQD.	.187" x 320" ULTRA-FIN WEATHERSTRIP	-	ULTRAFAB
M5	HD-131-R/L	1/EACH	HANDLE RAIL END CAP (R) RIGHT AND (L) LEFT	NYLON	M&M PLASTICS
M6	E26018WN	1/WINDOW	BULB WEATHERSTRIP, AT WINDOW SILL	PVC	ULTRAFAB
M7	HD-CAM LOCK	1/WINDOW	WINDOW CAM LOCK	ZINC	TRUTH
M8	HD-132	2/SASH	SASH STOP, 2" LONG	PVC	PROTOTYPE
M9	HD-125	2/SASH	SASH CAM	PVC	M&M PLASTICS
M10	HD-121	2/WINDOW	SASH TAKE OUT CLIP	-	BSI
M11	HD-146-6	2/WINDOW	WINDOW WEEP COVER	PVC	AMESBURY
M12	HD-134	1/WINDOW	SILL SPACER	PVC	PROTOTYPE
M13	HD-12-10106	AS REQD.	GLAZING GASKET (INSUL.-LAM.)	PVC	MELTPOINT
M14	HD-537	1	LATCH LOCK STRIKE PLATE	S.STEEL	BALDWIN
M15	HD-538	1	DEADBOLT STRIKE PLATE	S.STEEL	BALDWIN
M16	HD-536N	1	LATCH LOCK STRIKE PLATE SHIM	NYLON	-
M17	HD-390P	1/EACH	LATCH LOCK STRIKE & DEADBOLT PLATE SPACER	NYLON	-
M18	HD-STRIKE BOX	1/EACH	LATCH LOCK STRIKE & DEADBOLT DUST BOX	NYLON	-
M19	HD-525-9-REV	1	BOLT LOCK ASSEMBLY	S.STEEL	CGI
M20	HD-5455.056	1	WAVE SATIN NICKEL STRIKE LEVER	-	BALDWIN
M21	HD-8231.056	1	TRADITIONAL SATIN NICKEL DEADBOLT	-	BALDWIN
M22	HD-34-10116	1	WAVERLIE SATIN STRIKE LEVER	-	COPPER CREEK
M23	HD-DB2410SS	1	SATIN STAINLESS DEADBOLT	-	COPPER CREEK
M24	HD-CH-108-W	4/LEAF	4-1/2" x 4" x 0.140" THK. HINGE	ALUMINUM	SULLIVAN
M25	HD-AB800-US	4/LEAF	4-1/2" x 4" x 0.140" THK. HINGE	S.STEEL	HAGER
M26	-	1/LEAF	THREE POINT LOCK MECHANISM ASSEMBLY	-	CGI
M27	HD-SHEAR PLATE	4/LEAF	SHEAR PLATE FOR Ø3/8" THREADED ROD	6063-T6	EASTERN METAL
M28	HD-Ø3/8" ROD	2/LEAF	Ø3/8"-16 FULLY THREADED ROD (ZINC PLATED)	STEEL	-
M29	HD-SILL PAN	1 EACH	5 x 7/8 x 1/8" THK. SILL PAN (AT IN-SWING ONLY)	ALUMINUM	EASTERN METAL
M30	32084	AS REQ.D	FOAM-TITE CLOSED CELL COMPRESSION SEAL	-	AMESBURY

BILL OF MATERIALS

ITEM	PART No.	QUANTITY	DESCRIPTION	MATERIAL	SUPPLIER
M31	RE41	AS REQ.D	1/2 x 1/2" SELF ADHESIVE CLOSED CELL FOAM SEAL	EPDM	FRANK LOWE
M32	HD-542P	1	IN-SWING DOOR WEEP COVER, AT MIDSPAN	PVC	-
S1	-	2 OR 3/CORNER	#10 x 1-1/4" PHP. PH. SMS. WINDOW ASSY.	S. STEEL	-
S2	-	2/LOCK	#6 x 1/2" PHP. FH. SMS. SWEEP LOCK ASSY.	S. STEEL	-
S3	-	AS REQD.	#10 x 1" PHP. FH. SMS. WINDOW TO DOOR ATTACH.	S. STEEL	-
S4	-	1/EACH	#10 x 3/4" PHP. PH. SMS. TEK SHEAR BLOCK ASSY.	S. STEEL	-
S5	-	8/HINGE	#12-24 x 1/2" PHP. FH. UC. TF. HINGE ASSY.	S. STEEL	-
S6	-	3/CORNER	#12 x 1-1/4" HH. SMS. DOOR FRAME ASSY.	S. STEEL	-
S7	-	5/LEAF	#6 x 1/2" PHP. TH. SMS. ASTRAGAL ASSY.	S. STEEL	-
S8	-	1/BOLT LOCK	#10 x 3/4" PHP. PH. SMS. BOLT LOCK ASSY.	S. STEEL	-
N1	-	4/LEAF	Ø3/8"-16 SERRATED-FLANGE LOCKNUT (ZINC PLATED)	STEEL	-

WEEP HOLES

a) WINDOW

W1: 1/4 x 1-1/4" LONG WEEP SLOT, 6" FROM EACH END
W2: 1/2" LONG NOTCH, EACH END

b) DOOR (IN-SWING ONLY)

W1: 3/16 x 1/2" LONG WEEP SLOT, ON THE EXTERIOR, AT SILL MIDSPAN
W2: 3/16 x 1/2" LONG NOTCH , ON THE INTERIOR, 6" FROM EACH END

MIAMI-DADE COUNTY

Approved as complying with the Florida Building Code
Date JULY 28, 2016
NOA# 16-0329.02
Miami Dade Product Control
By

YIPING WANG, P.E.
FLORIDA REGISTRATION
FL #55983
C.A.N. 28677
No. 55983
STATE OF FLORIDA
PROFESSIONAL ENGINEER

JUL 05 2016

REVISIONS

NO	DATE	DESCRIPTION

MCY ENGINEERING, INC.
GLAZING CONSULTANTS
8501 SW 124 Ave. Ste. 205A
MIAMI, FL 33183
P: 305.271.0117
F: 305.279.6818
www.MCYEngineering.com
MCY.Engineering@Att.net

SERIES SENTINEL 165 'BALCONY BREEZE' ALUMINUM INSWING DOOR (LMI / SMI)

CGI Windows and Doors, Inc.
10100 N.W. 25th Street, Miami, FL 33172
Tel: 305.593.6590 | Fax: 305.593.6592

BOM

DATE	3-11-16
SCALE	-
DRAWN	-
PROJECT	MCY 16-010

DRAWING NO.
AD16-04

DOOR PANEL COMPONENTS

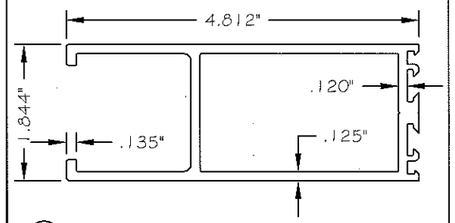

E1 TOP RAIL

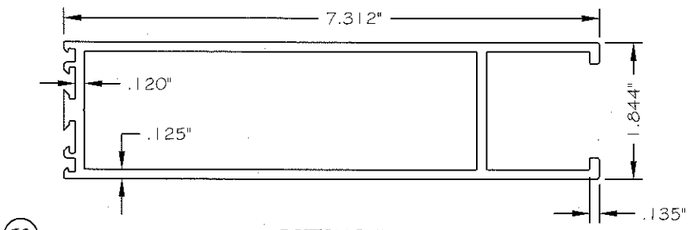

E2 BOTTOM RAIL

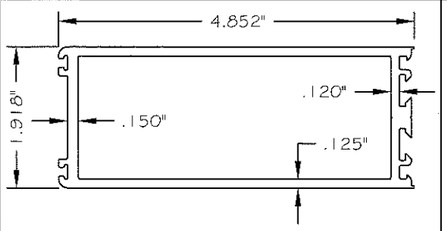

E3 VERTICAL STILE

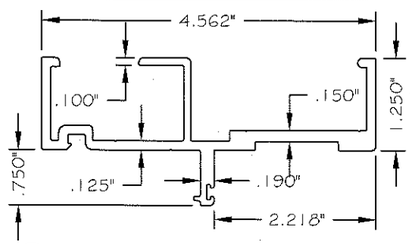

E8 FRAME JAMB

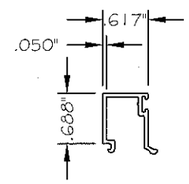

E13 GLAZING BEAD

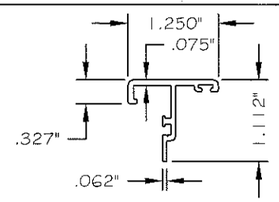

E4 ASTRAGAL

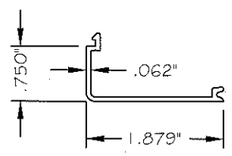

E9 JAMB SCREW COVER

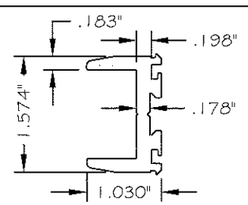

E5 SHEAR BLOCK

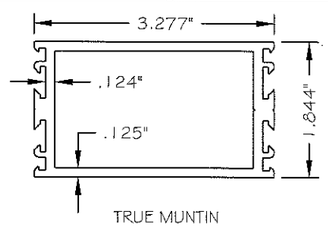

E10 TRUE MUNTIN

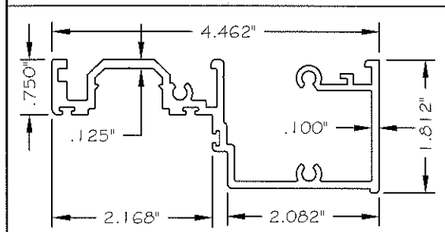

E6 FRAME HEAD / SILL

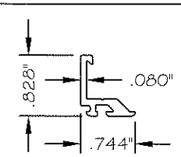

E11 GLAZING ADAPTOR (INSUL.-LAM. GLASS)

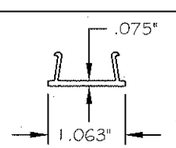

E7 HEAD / SILL SCREW CAP

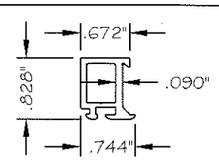

E12 GLAZING ADAPTOR (LAM. GLASS)

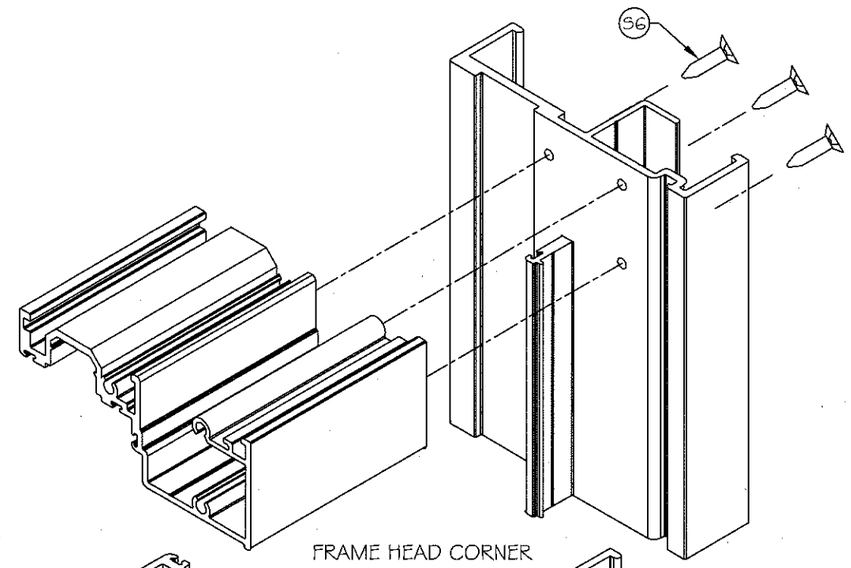

FRAME HEAD CORNER

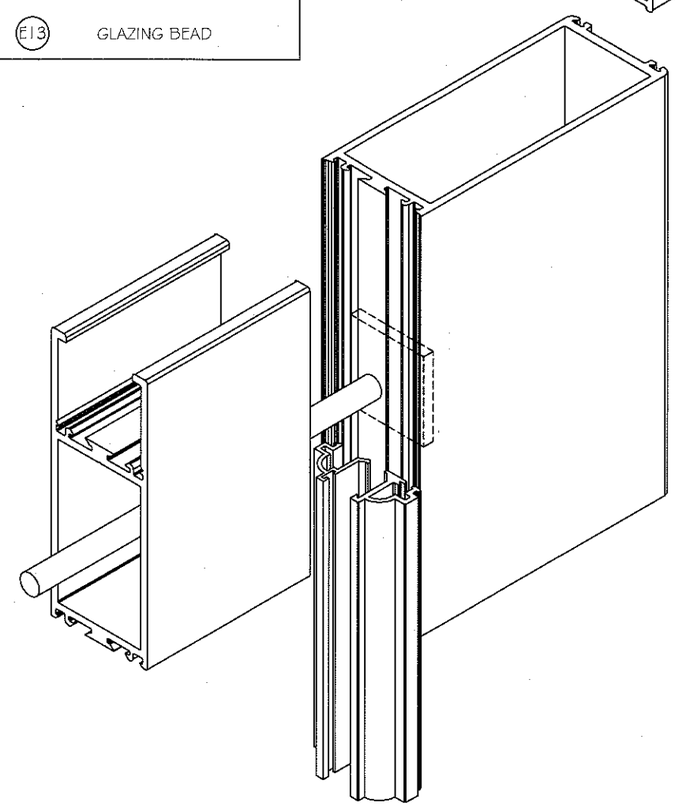

PANEL CORNER DETAIL

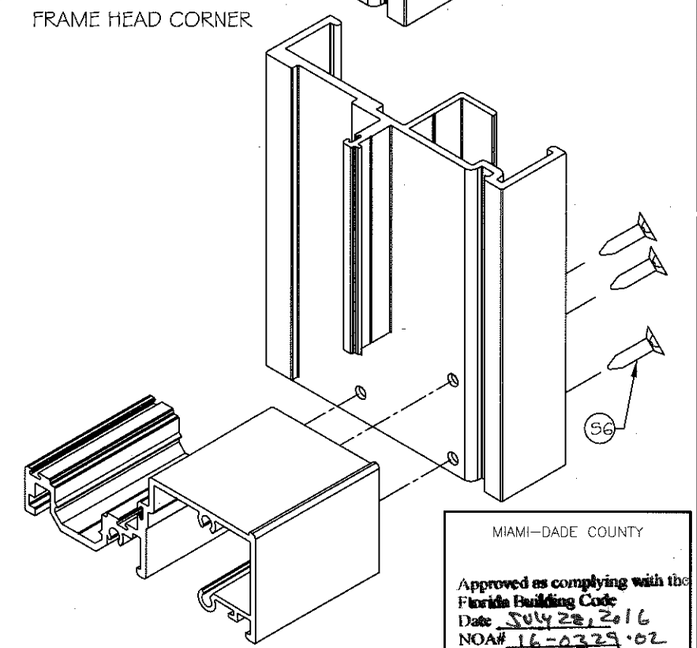

FRAME SILL CORNER

DOOR CORNER CONSTRUCTION

REVISIONS	
NO. DATE	DESCRIPTION

MCY ENGINEERING, INC.
GLAZING CONSULTANTS
8501 SW 124Ave.Ste.205A
MIAMI, FL 33183
P: 305.271.0117
F: 305.279.6818
www.MCYEngineering.com
MCY.Engineering@Att.net

MIAMI–DADE COUNTY
Approved as complying with the Florida Building Code
Date JULY 28, 2016
NOA# 16-0329.02
Miami Dade Product Control
By

YIPING WANG, P.E.
FLORIDA REGISTRATION
FL #55983
C.A.N. 28677
No. 55983
STATE OF FLORIDA
PROFESSIONAL ENGINEER

SERIES SENTINEL 165 BALCONY BREEZE ALUMINUM INSWING DOOR (LMI / SMI)

CGI Windows and Doors, Inc.
10100 N.W. 25th Street, Miami, FL 33172
Tel: 305.593.6590 | Fax: 305.593.6592

PARTS

DATE	3-11-16
SCALE	1:2
DRAWN	-
PROJECT	MCY 16-010

DRAWING NO.
AD16-04

JUL 05 2016

SINGLE HUNG WINDOW COMPONENTS

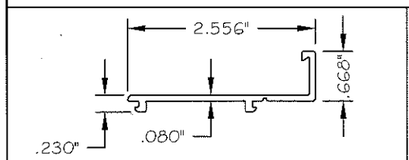

E14 WINDOW FILLER

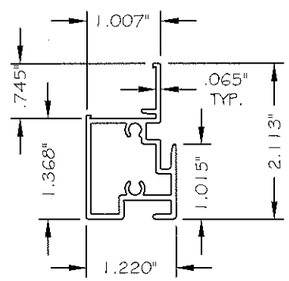

E15 MEETING RAIL

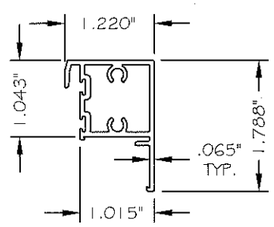

E16 LOCK RAIL

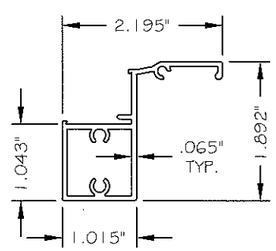

E17 HANDLE RAIL

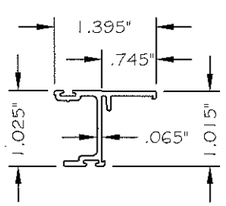

E18 SASH RAIL

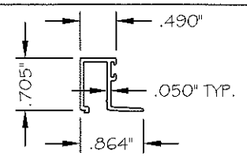

E19 GLAZING BEAD (LAM. GLASS)

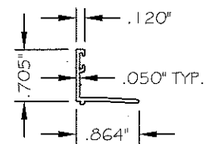

E20 GLAZING BEAD (INSUL.-LAM. GLASS)

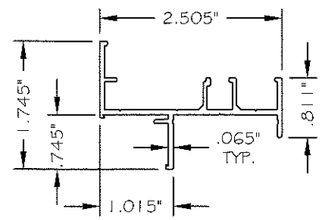

E21 FLANGE FRAME HEAD

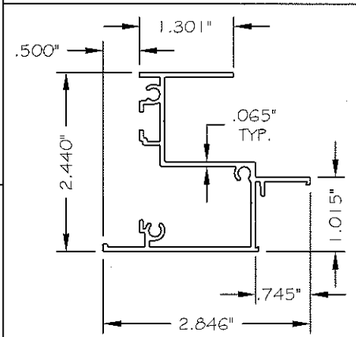

E22 FLANGE FRAME JAMB

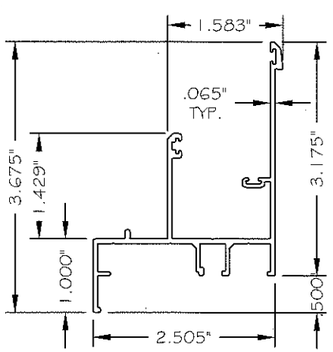

E23 FLANGE FRAME SILL

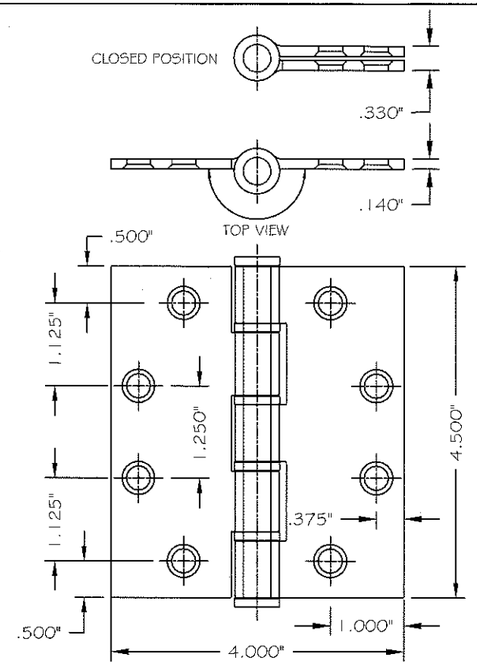

M24 4 1/2" X 4" X 0.140" THK. HINGE ALUMINUM

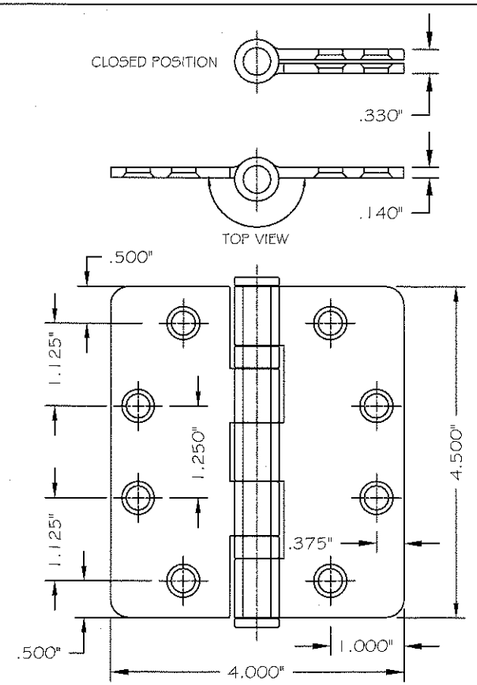

M25 4 1/2" X 4" X 0.140" THK. HINGE S. STEEL

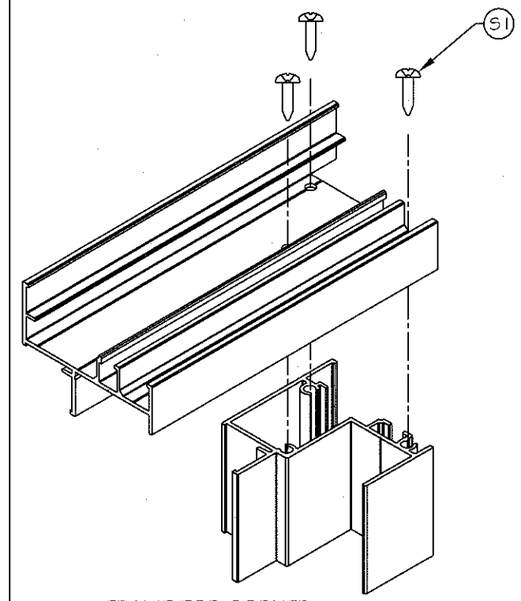

FRAME TOP CORNER

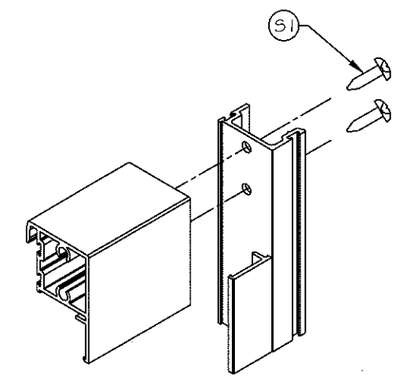

VENT TOP CORNER

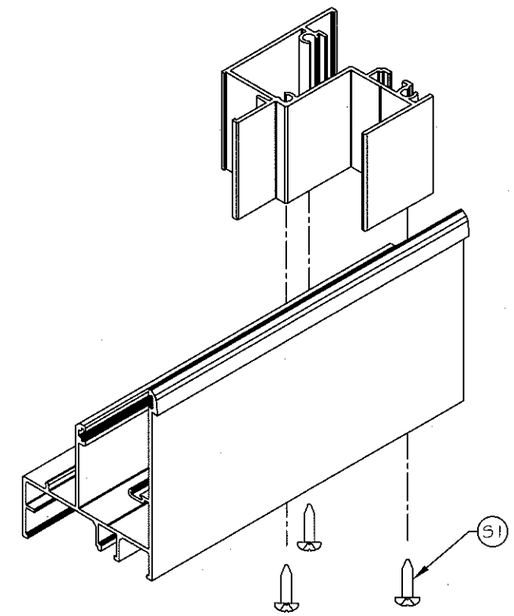

FRAME BOTTOM CORNER

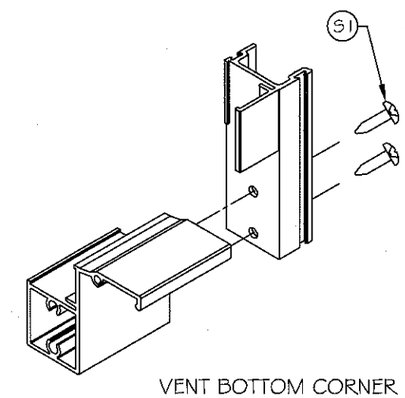

VENT BOTTOM CORNER

SINGLE HUNG WINDOW CORNER CONSTRUCTION

MIAMI-DADE COUNTY

Approved as complying with the Florida Building Code
Date July 28, 2016
NOA# 16-0329.02
Miami Dade Product Control
By Ishaq I. Khanda

YIPING WANG, P.E.
FLORIDA REGISTRATION
FL #55983
C.A.N. 28677
No. 55983
STATE OF FLORIDA
PROFESSIONAL ENGINEER

JUL 05 2016

REVISIONS		
NO	DATE	DESCRIPTION

MCY ENGINEERING, INC.
GLAZING CONSULTANTS
8501 SW 124Ave.Ste.205A
MIAMI, FL 33183
P: 305.271.0117
F: 305.279.6818
www.MCYEngineering.com
MCY.Engineering@Att.net

SERIES SENTINEL 165 'BALCONY BREEZE' ALUMINUM INSWING DOOR (LMI / SMI)

CGI Windows and Doors, Inc.
10100 N.W. 25th Street, Miami, FL 33172
Tel: 305.593.6590 | Fax: 305.593.6592

PARTS

DATE	3-11-16
SCALE	1:2
DRAWN	-
PROJECT	MCY 16-010

DRAWING NO.
AD16-04