MIAMI-DADE COUNTY
DEPARTMENT OF REGULATORY AND ECONOMIC RESOURCES (RER)
BOARD AND CODE ADMINISTRATION DIVISION

MIAMI-DADE COUNTY
PRODUCT CONTROL SECTION
11805 SW 26 Street, Room 208
T (786) 315-2590 F (786) 315-2599
www.miamidade.gov/economy

NOTICE OF ACCEPTANCE (NOA)

Gopi Glass Sales & Services Corp.

7450 NW 41st Street
Miami, FL 33166

SCOPE:

This NOA is being issued under the applicable rules and regulations governing the use of construction materials. The documentation submitted has been reviewed and accepted by Miami-Dade County RER -Product Control Section to be used in Miami Dade County and other areas where allowed by the Authority Having Jurisdiction (AHJ).

This NOA shall not be valid after the expiration date stated below. The Miami-Dade County Product Control Section (In Miami Dade County) and/or the AHJ (in areas other than Miami Dade County) reserve the right to have this product or material tested for quality assurance purposes. If this product or material fails to perform in the accepted manner, the manufacturer will incur the expense of such testing and the AHJ may immediately revoke, modify, or suspend the use of such product or material within their jurisdiction. RER reserves the right to revoke this acceptance, if it is determined by Miami-Dade County Product Control Section that this product or material fails to meet the requirements of the applicable building code.

This product is approved as described herein, and has been designed to comply with the Florida Building Code, including the High Velocity Hurricane Zone.

DESCRIPTION: Series "S-5000 "Outswing Aluminum (Narrow Stiles) Door w/wo Transom

APPROVAL DOCUMENT: Drawing No. **W98-23 Rev. J**, titled "S- 5000 Narrow Stile Entrance Door (NI)", sheets 1 through 7 of 7, prepared by Al-Farooq Corporation, dated 03-12-98 and last revised on JUN 26, 2014, signed and sealed by Javad Ahmad, P. E., bearing the Miami-Dade County Product Control Renewal stamp with the Notice of Acceptance number and expiration date by the Miami-Dade County Product Control Section.

MISSILE IMPACT RATING: None: Approved Hurricane Protection Device complying w/ FBC is required.

Limitations:

1. See Door Design Pressure (DP) in sheet 1. See sheet 7 Design Pressure capacity for Horizontal Transom 4" (item # 23) or 4-1/2"(item #23 A) . Door w/ Transom is used, lower DP shall control for entire unit.
2. Not approved for Water infiltration ratings, unless protected by overhang complying w/ FBC requirement.
3. Masonry (CMU) installation is applicable at jambs only.

LABELING: Each unit shall bear a permanent label with the manufacturer's name or logo, city, state, model/series, and following statement: "Miami-Dade County Product Control Approved", unless otherwise noted herein.

RENEWAL of this NOA shall be considered after a renewal application has been filed and there has been no change in the applicable building code negatively affecting the performance of this product.

TERMINATION of this NOA will occur after the expiration date or if there has been a revision or change in the materials, use, and/or manufacture of the product or process. Misuse of this NOA as an endorsement of any product, for sales, advertising or any other purposes shall automatically terminate this NOA. Failure to comply with any section of this NOA shall be cause for termination and removal of NOA.

ADVERTISEMENT: The NOA number preceded by the words Miami-Dade County, Florida, and followed by the expiration date may be displayed in advertising literature. If any portion of the NOA is displayed, then it shall be done in its entirety.

INSPECTION: A copy of this entire NOA shall be provided to the user by the manufacturer or its distributors and shall be available for inspection at the job site at the request of the Building Official.

This NOA **renews NOA# 14-0728.05** and consists of this page 1 and evidence pages E-1, as well as approval document mentioned above.

The submitted documentation was reviewed by **Ishaq I. Chanda, P.E.**

MIAMI-DADE COUNTY APPROVED

8/11/16

NOTICE OF ACCEPTANCE: EVIDENCE SUBMITTED

A. DRAWINGS

1. Manufacturer's die drawings and sections (Submitted under files below)
2. Drawing No. **W98-23 Rev. J**, titled "S- 5000 Narrow Stile Entrance Door (NI)", sheets 1 through 7 of 7, prepared by Al-Farooq Corporation, dated 03-12-98 and last revised on JUN 26, 2014, signed and sealed by Javad Ahmad, P.E.

B. TESTS (submitted under files **#14-0728.05/ #11-0705.03/#10-0107.06 & # 07-0717.02)**

1. Test reports on: 1) Air Infiltration Test, per FBC, TAS 202-94
   2) Uniform Static Air Pressure Test, Loading per FBC TAS 202-94
   3) Water Resistance Test, per FBC, TAS 202-94(Not conducted)
   6) Forced Entry Test, per FBC 2411 3.2.1, TAS 202-94

   along with marked–up drawings and installation diagram of aluminum outswing doors w/ transom, prepared by Hurricane Engineering & Testing, Inc, Test Report No. **HETI–07–4153** dated June11, 2007, signed and sealed by Rafael L. Droz–Seda, P. E.
2. Test report on 1) Air Infiltration Test, per FBC, TAS 202-94
   2) Uniform Static Air Pressure Test, Loading per TAS 202-94
   3) Water Resistance Test, per FBC, TAS 202-94(Not conducted)
   4) Forced Entry Test per FBC.

   along with installation diagram of an aluminum outswing doors w/transom, prepared Hurricane Engineering & Testing Inc, Test Report No. **HETI-97-1123** dated 11-28-1997, signed and sealed by Hector M. Medina, P.E.(Note: Original test conducted per SFBC, PA 202-94 now termed as FBC, 202-94)

C. CALCULATIONS (submitted under files **#14-0728.05**)

1. Anchor verification calculations and structural analysis, complying with FBC-2014 (**5th** Edition), prepared by Al Farooq Corporation, dated June 19, 2014, signed and sealed by Javad Ahmad, P.E.
2. Glazing complies w/ ASTME-1300-02, -04 & -09.

D. QUALITY ASSURANCE

1. Miami-Dade Department of Regulatory and Economic Resources (RER).

E. MATERIAL CERTIFICATIONS (submitted under file **#11-0705.03)**

1. Test report No. HETI-11-M110 dated August 13, 2011, per ASTMC 661 for PVC and EPDM gasket, issued by Hurricane Engineering & Testing Inc.

F. STATEMENTS (submitted under files **#14-0728.05**)

1. Statement letter of conformance to FBC 2014 (**5th** Edition) and letter of no financial interest, prepared by Al Farooq Corporation, dated 06/26/14, signed and sealed by Javad Ahmad, P.E.
2. Statement of lab compliance, as part of above test reports.

G. OTHER

1. This NOA **renews** NOA # ***14-0728.05***, expiring on Sep. 14, 2021.

Ishaq I. Chanda

Ishaq I. Chanda, P.E.
Product Control Examiner
NOA No. 16-0502.02
Expiration Date: September 14, 2021
Approval Date: August 11, 2016

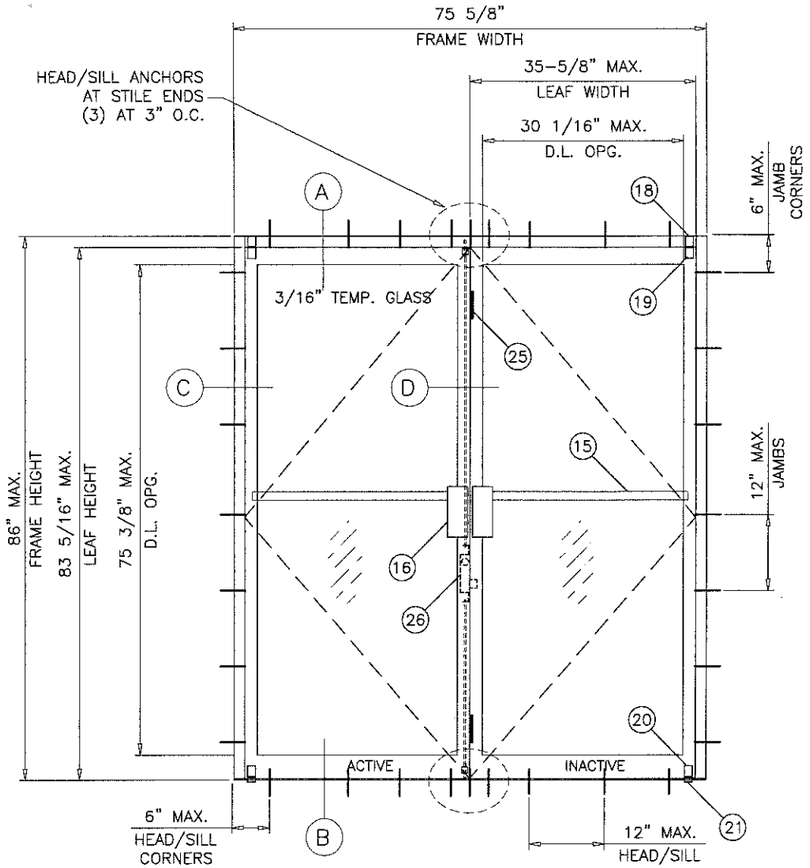

TYPICAL ELEVATION

(XX)

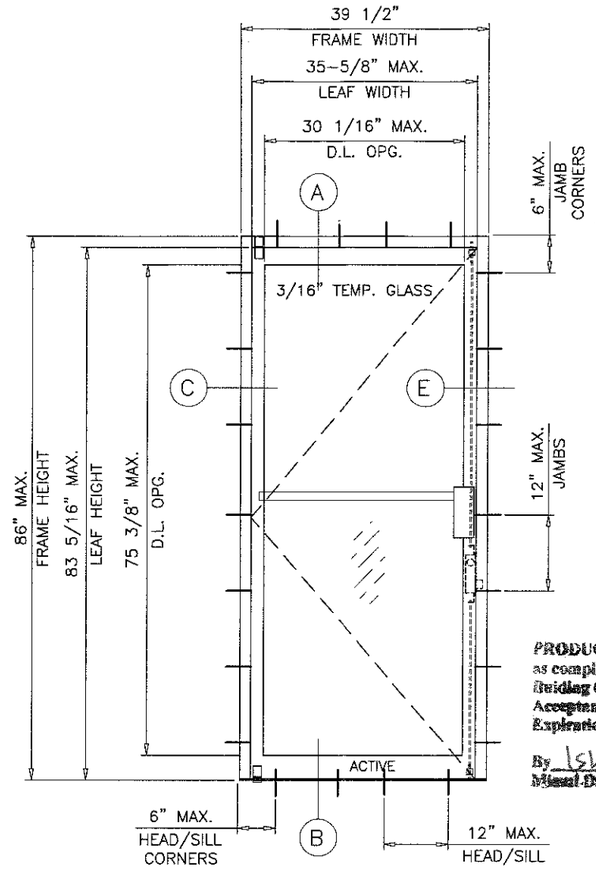

TYPICAL ELEVATION

(X)

DOORS WITH 3/16" TEMPERED GLASS			
NOMINAL DIMS.		DESIGN LOAD - PSF	
LEAF HEIGHT	LEAF WIDTH	EXT.(+)	INT.(-)
6/8	2/6	79.4	92.0
	3/0	66.2	76.7
7/0	2/6	75.6	87.6
	3/0	63.0	73.0

NOTE:
GLASS CAPACITIES ON THIS SHEET ARE BASED ON ASTM E1300-09 (3 SEC. GUSTS) AND FLORIDA BUILDING COMMISSION DECLARATORY STATEMENT DCA05-DEC-219

DOORS NOT APPROVED FOR INSTALLATIONS WHERE WATER INFILTRATION RESISTANCE IS REQUIRED.

NOMINAL WIDTH	FRAME WIDTH	LEAF WIDTH
2/6	33-1/2"	31-5/8" (X)
3/0	39-1/2"	35-5/8" (X)
5/0	63-5/8"	31-5/8" (XX)
6/0	75-5/8"	35-5/8" (XX)

NOMINAL HEIGHT	FRAME HEIGHT	LEAF HEIGHT
6/8	82"	79-5/16"
7/0	86"	83-5/16"

D.L.O. HEIGHT = LEAF HEIGHT - 8 IN.
D.L.O. WIDTH = LEAF WIDTH - 5.25 IN.

PRODUCT RENEWED
as complying with the Florida Building Code
Acceptance No 16-0502.02
Expiration Date SEP 14, 2021
By Ishay Llanes
Miami-Dade Product Control

SERIES-5000 ENTRANCE DOOR
NARROW STILE OUT-SWING TYPE

THIS PRODUCT HAS BEEN DESIGNED AND TESTED TO COMPLY WITH THE REQUIREMENTS OF THE FLORIDA BUILDING CODE INCLUDING HIGH VELOCITY HURRICANE ZONE (HVHZ).

1BY OR 2BY WOOD BUCKS BY OTHERS, MUST BE ANCHORED PROPERLY TO TRANSFER LOADS TO THE STRUCTURE.

ANCHORS SHALL BE AS LISTED, SPACED AS SHOWN ON DETAILS, ANCHORS EMBEDMENT TO BASE MATERIAL SHALL BE BEYOND WALL DRESSING OR STUCCO.

ANCHORING OR LOADING CONDITIONS NOT SHOWN IN THESE DETAILS ARE NOT PART OF THIS APPROVAL.

A LOAD DURATION INCREASE IS USED IN DESIGN OF ANCHORS INTO WOOD ONLY.

MATERIALS INCLUDING BUT NOT LIMITED TO STEEL/METAL SCREWS, THAT COME INTO CONTACT WITH OTHER DISSIMILAR MATERIALS SHALL MEET THE REQUIREMENTS OF THE FLORIDA BLDG. CODE.

LOCKS:

INACTIVE LEAF:

CONCEALED FLUSH BOLTS AT 12" FROM TOP AND BOTTOM OF LEAF.

MATERIAL: DIE CAST ZAMAK BODY AND LEVER WITH 1/4" DIA. THREADED STEEL EXTENSION AND 9/16" DIA. NYLON TIP.

ACTIVE LEAF:

3 POINT LOCK SYSTEM USING ADAMS RITE M1805S, DEAD BOLT WITH #4015 THROW BOLT OPERATED BY DEAD LOCK AND ENGAGING FRAME HEAD AT TOP AND THRESHOLD AT BOTTOM.

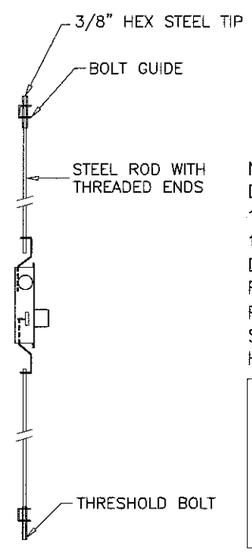

NOTE:
DOORS MAY BE INSTALLED USING
1-3/4" X 4" (SERIES 4000) OR
1-3/4" X 4-1/2" (SERIES 4500) FRAMING SYSTEM.
DETAILS SHOW 4000 SYSTEM FRAMES SEE SHEET 5
FOR EXTRUSION DETAILS OF 4500 FRAMING SYSTEM.
FOR SINGLE O/X OR DOUBLE O/XX (DOORS WITH TRANSOM)
SEE SHEET 7. LOWER DESIN PRESSURE OF DOORS OR
HORIZONTAL TRANSOM SHALL CONTROL.

DOORS NOT RATED FOR IMPACT.

INSTALLATION OF THIS PRODUCT IN THE HVHZ AREA REQUIRES THE USE OF APPROVED SHUTTERS OR EXTERNAL PROTECTION DEVICES COMPLYING WITH HVHZ REQUIREMENTS.

INSTALLATION OF THIS SYSTEM OUTSIDE THE HVHZ AREA SHALL MEET THE APPLICABLE REQUIREMENTS FOR WIND BORNE DEBRIS PROTECTION.

Engr: JAVAD AHMAD
CIVIL
FLA. PE # 70592
C.A.N. 3538
JUN 26 2014

PRODUCT REVISED
as complying with the Florida Building Code
Acceptance No 14-0728.05
Expiration Date Sept 14, 2016
By Manuel Sera
Miami-Dade Product Control

AL-FAROOQ CORPORATION
ENGINEERS & PRODUCT DEVELOPMENT
1235 S.W. 87 AVE
MIAMI, FLORIDA 33174
TEL. (305) 264-8100 FAX. (305) 262-6978
COMP-ANL\W98-23GG

S-5000 NARROW STILE ENTRANCE DOOR (N.I.)

GOPI GLASS CORPORATION
7450 N.W. 41 STREET
MIAMI, FL. 33166
TEL. (305) 592-2009 FAX. (305) 477-0992

revisions:

no	date	by	description
F	10.14.09		UPDATED FOR 2007 FBC
G	06.02.11		GENERAL REVISION
H	08.04.11		REV. PER BNC COMMENTS
I	02.24.12		UPDATED TO 2010 FBC
J	06.23.14		UPDATED TO 2014 FBC

date: 03-12-98
scale: 1/2"=1'-0"
dr. by: HAMID
chk. by:

drawing no.
W98-23

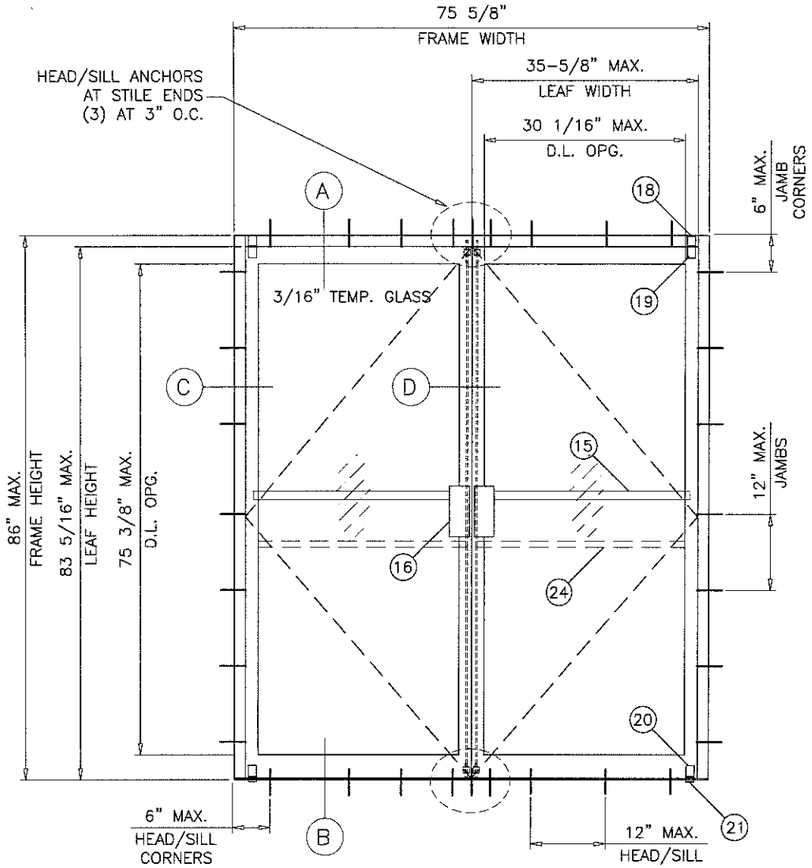

TYPICAL ELEVATION

(XX)

OUT-SWING W/ JACKSON PANIC EXIT

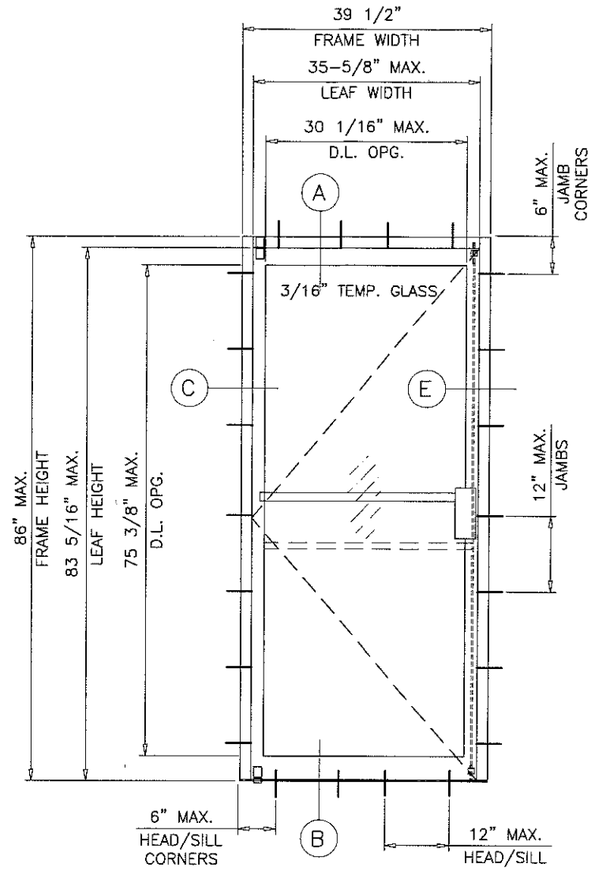

TYPICAL ELEVATION

(X)

OUT-SWING W/ JACKSON PANIC EXIT

PRODUCT RENEWED
as complying with the Florida
Building Code
Acceptance No. 16-0520.02
Expiration Date 9/14/21
By Ishaq I. Chand
Miami Dade Product Control

LOCKS:

ACTIVE/INACTIVE LEAF:

2 POINT LOCK PANIC HARDWARE MODEL 1085 BY JACKSON EXIT DEVICE WITH PANIC BAR LOCATED AT 36" FROM FLOOR EACH DOOR LEAF.

Engr: JAVAD AHMAD
CIVIL
FLA. PE # 70592
C.A.N. 3538

JUN 26 2014

PRODUCT REVISED
as complying with the Florida
Building Code
Acceptance No 14-0728.05
Expiration Date Sept. 14, 2016
By Manuel Saez
Miami Dade Product Control

AL-FAROOQ CORPORATION
ENGINEERS & PRODUCT DEVELOPMENT
1235 S.W. 87 AVE
MIAMI, FLORIDA 33174
TEL. (305) 264-8100 FAX. (305) 262-6978

COMP-ANL\W98-23GG

S-5000 NARROW STILE ENTRANCE DOOR (N.I.)

GOPI GLASS CORPORATION
7450 N.W. 41 STREET
MIAMI, FL. 33166
TEL. (305) 592-2009 FAX. (305) 477-0992

revisions:

no	date	by	description
F	10.14.09		UPDATED FOR 2007 FBC
G	06.02.11		GENERAL REVISION
H	08.04.11		REV. PER BNC COMMENTS
I	02.24.12		NO CHANGE THIS SHEET
J	06.23.14		NO CHANGE THIS SHEET

date: 03-12-98
scale: 1/2"=1'-0"
dr. by: HAMID
chk. by:

drawing no.
W98-23

sheet 2 of 7

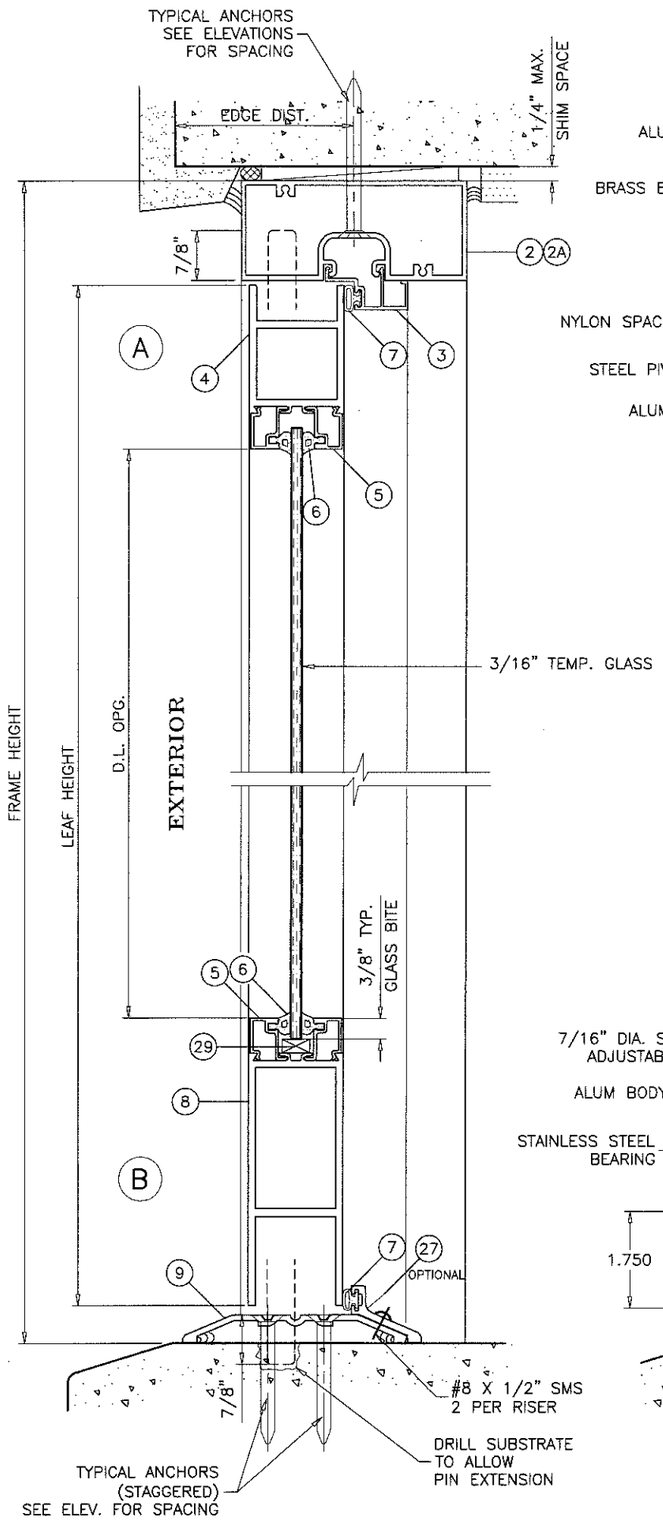

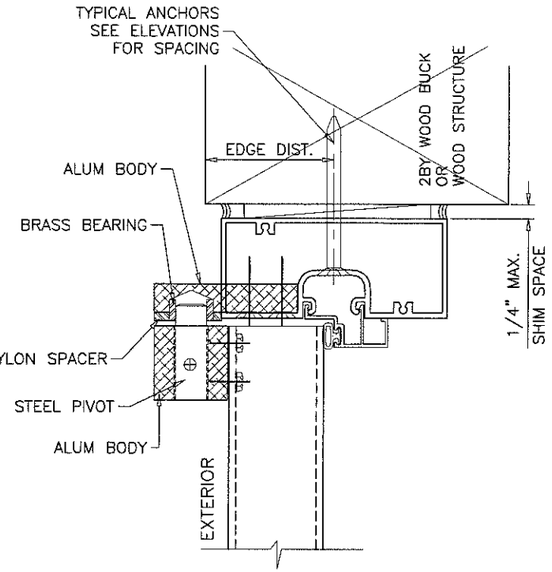

TOP FRAME OFFSET PIVOT

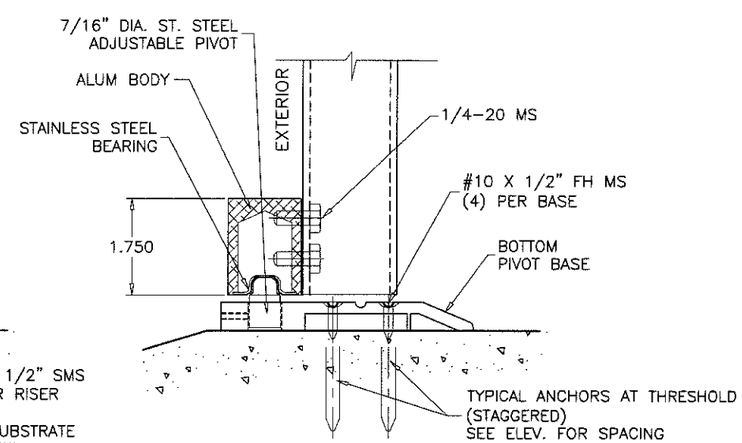

THRESHOLD OFFSET PIVOT

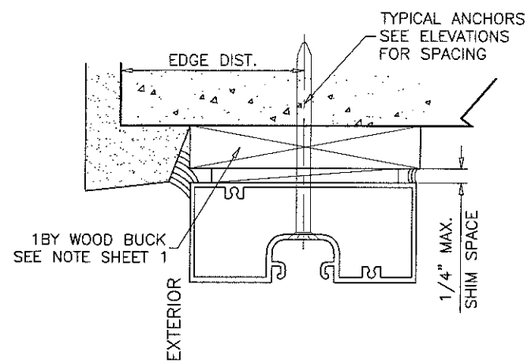

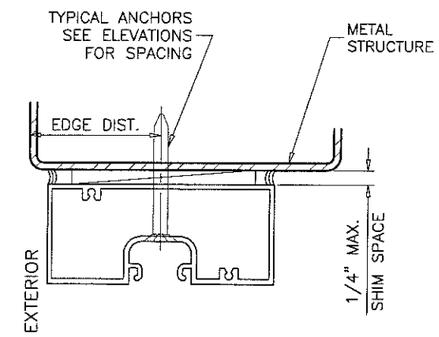

WOOD BUCKS AND METAL STRUCTURE NOT BY GOPI GLASS MUST SUSTAIN LOADS IMPOSED BY GLAZING SYSTEM AND TRANSFER THEM TO THE BUILDING STRUCTURE.

TYPICAL ANCHORS: SEE ELEV. FOR SPACING

1/4" DIA. ULTRACON BY 'ELCO' (Fu=177 KSI, Fy=155 KSI)

INTO 2BY WOOD BUCKS OR WOOD STRUCTURES
1-1/2" MIN. PENETRATION INTO WOOD

THRU 1BY BUCKS INTO CONC. OR MASONRY
1-3/4" MIN. EMBED INTO CONC. OR MASONRY

DIRECTLY INTO CONC. OR MASONRY
1-3/4" MIN. EMBED INTO CONC. OR MASONRY

#14 SMS OR SELF DRILLING SCREWS (GRADE 2 CRS)

INTO MIAMI-DADE COUNTY APPROVED MULLIONS (1/8" THK. MIN.)

INTO METAL STRUCTURES
STEEL : 12 GA. MIN. (Fy = 36 KSI MIN.)
ALUMINUM : 1/8" THK. MIN. (6063-T5 MIN.)
(STEEL IN CONTACT WITH ALUMINUM TO BE PLATED OR PAINTED)

TYPICAL EDGE DISTANCE

INTO CONCRETE AND MASONRY = 2-1/2" MIN.
INTO WOOD STRUCTURE = 1" MIN.
INTO METAL STRUCTURE = 3/4" MIN.

CONCRETE AT HEAD, SILL OR JAMBS f'c = 3000 PSI MIN.
C-90 HOLLOW/FILLED BLOCK AT JAMBS f'm = 2000 PSI MIN.

SEALANTS:

FRAME AND PANEL CORNERS, INSTALLATION SCREWS AND ALL METAL PARTS CONNECTIONS SEALED WITH CAULK.

PRODUCT RENEWED
as complying with the Florida Building Code
Acceptance No. 16-0502.02
Expiration Date 9/14/21
By Ishwar Chand
Miami-Dade Product Control

Engr: JAVAD AHMAD
CIVIL
FLA. PE # 70592
C.A.N. 3538

JUN 26 2014

PRODUCT REVISED
as complying with the Florida Building Code
Acceptance No 14.0728.05
Expiration Date Sept. 14, 2016
By Manuel Sera
Miami Dade Product Control

AL-FAROOQ CORPORATION
ENGINEERS & PRODUCT DEVELOPMENT
1235 S.W. 87 AVE
MIAMI, FLORIDA 33174
TEL. (305) 264-8100 FAX. (305) 262-6978
COMP-ANL\W98-23GG

S-5000 NARROW STILE ENTRANCE DOOR (N.I.)

GOPI GLASS CORPORATION
7450 N.W. 41 STREET
MIAMI, FL. 33166
TEL. (305) 592-2009 FAX. (305) 477-0992

revisions:

no	date	by	description
F	10.14.09		UPDATED FOR 2007 FBC
G	06.02.11		GENERAL REVISION
H	08.04.11		REV. PER BNC COMMENTS
I	02.24.12		NO CHANGE THIS SHEET
J	06.23.14		UPDATED TO 2014 FBC

date: 03-12-98
scale: 3/8" = 1"
dr. by: HAMID
chk. by:

drawing no.
W98-23

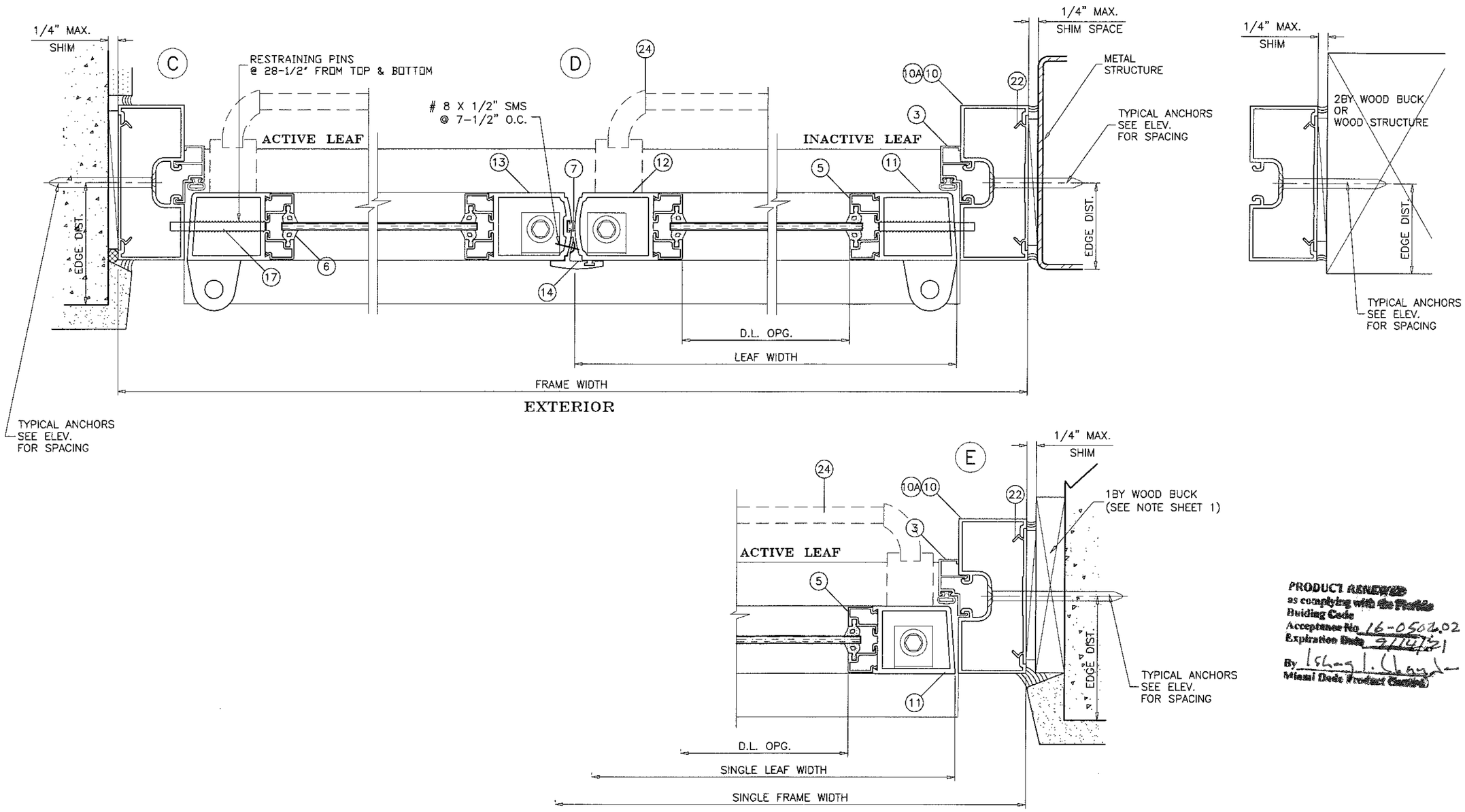

PRODUCT RENEWED
as complying with the Florida
Buiding Code
Acceptance No 16-0502.02
Expiration Date 9/14/21
By Ishag I. Chayde
Miami Dade Product Control

Engr: JAVAD AHMAD
CIVIL
FLA. PE # 70592
C.A.N. 3538

JUN 26 2014

PRODUCT REVISED
as complying with the Florida
Building Code
Acceptance No 14-0728.05
Expiration Date Sept. 14, 2016
By Manuel Perez
Miami Dade Product Control

afc

AL-FAROOQ CORPORATION
ENGINEERS & PRODUCT DEVELOPMENT
1235 S.W. 87 AVE
MIAMI, FLORIDA 33174
TEL. (305) 264-8100 FAX. (305) 262-6978

COMP-ANL\W98-23GG

S-5000 NARROW STILE ENTRANCE DOOR (N.I.)

GOPI GLASS CORPORATION
7450 N.W. 41 STREET
MIAMI, FL. 33166
TEL. (305) 592-2009 FAX. (305) 477-0992

revisions:

no	date	by	description
F	10.14.09		UPDATED FOR 2007 FBC
G	06.02.11		GENERAL REVISION
H	08.04.11		REV. PER BNC COMMENTS
I	02.24.12		NO CHANGE THIS SHEET
J	06.23.14		NO CHANGE THIS SHEET

date: 03-12-98
scale: 3/8" = 1"
dr. by: HAMID
chk. by:

drawing no.
W98-23

sheet 4 of 7

SERIES 4000 FRAME

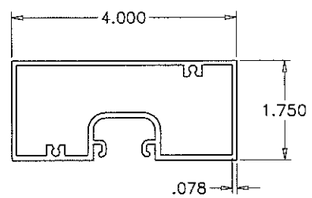

4" FRAME HEAD
(2) 5007 6063–T6

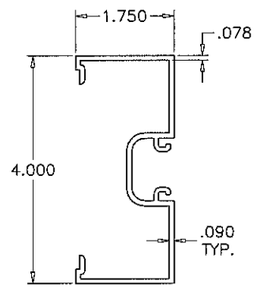

4" FRAME JAMB
(10) 5001 6063–T6

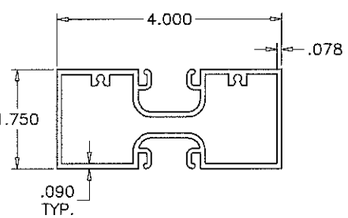

4" HORIZONTAL
(23) – 6063–T6

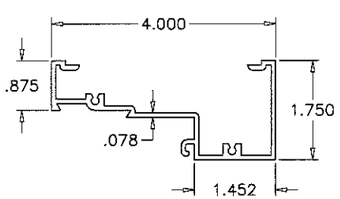

4" TRANSOM HEAD
(1) 5003 6063–T6

SERIES 4500 FRAME

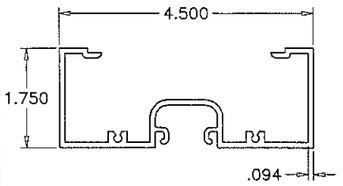

4–1/2" FRAME HEAD
(2A) 5502 6063–T5

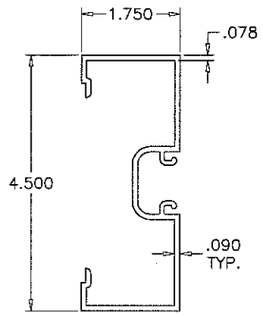

4–1/2" FRAME JAMB
(10A) 5502 6063–T6

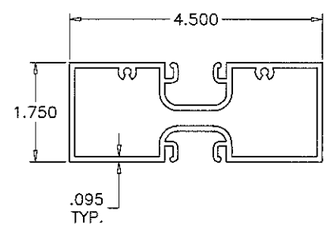

4–1/2" HORIZONTAL
(23A) 5506 6063–T6

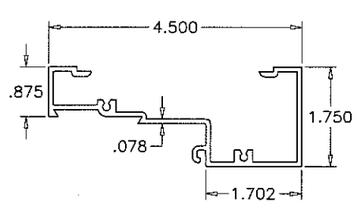

4–1/2" TRANSOM HEAD
(1A) 5503 6063–T5

SERIES 5000 DOOR

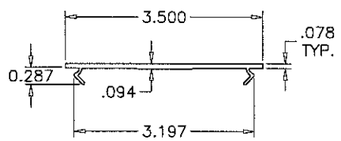

ANCHOR PLATE
(22) 5009 6063–T6

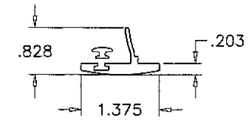

ASTRAGAL
(14) 20271 6063–T5

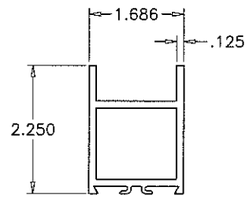

TOP RAIL
(4) 20236 6063–T5

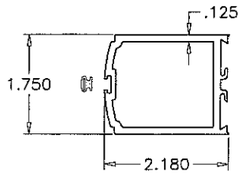

LOCK STILE
(13) 20272 6063–T5

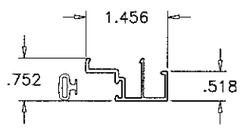

DOOR STOP
(3) 20913 6063–T5

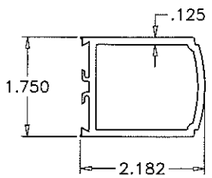

FIXED STILE
(12) 20240 6063–T5

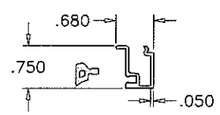

GLASS STOP
(5) 20234 6063–T5

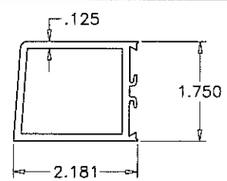

HINGE/PIVOT STILE
(11) 20237 6063–T5

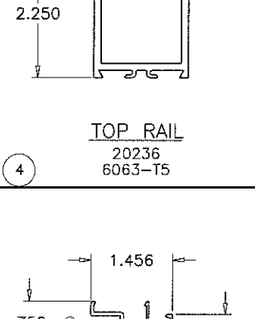

BOTTOM RAIL
(8) 20238 6063–T5

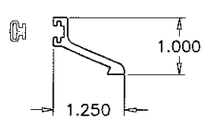

THRESHOLD RISER
(27) AGP–292 6063–T5

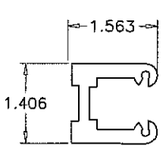

SHEAR BLOCK
(28) – 6063–T5

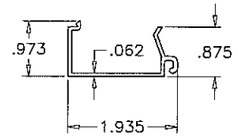

TRANSOM GLASS STOP
(31) 5504 6063–T5

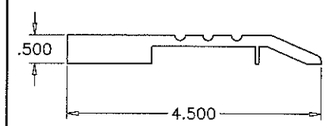

PIVOT BASE
(11) – 6063–T5

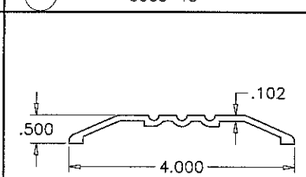

THRESHOLD
(9) 20305 6063–T5

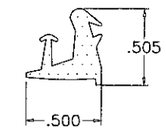

HARDNESS = 71±5 SHORE A
TENSILE STRENGTH = 1429 PSI
ELONGATION AT BREAK = 295%
TEAR STRENGTH = 221 PPI
SPECIFIC GRAVITY = 1.21

(30) GLAZING GASKET
SCALE 1:1

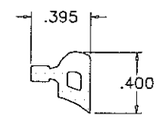

HARDNESS = 42±5 SHORE A
TENSILE STRENGTH = 1506 PSI
ELONGATION AT BREAK = 286%
TEAR STRENGTH = 221 PPI
SPECIFIC GRAVITY = 1.21

(6) GLAZING GASKET
SCALE 1:1

PRODUCT RENEWED
as complying with the Florida
Building Code
Acceptance No. 16-0502.02
Expiration Date 9/19/21
By Ishaq I. Chanda
Miami Dade Product Control

Engr: JAVAD AHMAD
CIVIL
FLA. PE # 70592
C.A.N. 3538
JUN 26 2014

PRODUCT REVISED
as complying with the Florida
Building Code
Acceptance No 14-0728.05
Expiration Date Sept. 14, 2016
By Manuel Perez
Miami Dade Product Control

AL-FAROOQ CORPORATION
ENGINEERS & PRODUCT DEVELOPMENT
1235 S.W. 87 AVE
MIAMI, FLORIDA 33174
TEL. (305) 264-8100 FAX. (305) 262-6978
COMP–ANL\W98–23GC

S–5000 NARROW STILE ENTRANCE DOOR (N.I.)

GOPI GLASS CORPORATION
7450 N.W. 41 STREET
MIAMI, FL. 33166
TEL. (305) 592–2009 FAX. (305) 477–0992

revisions:

no	date	by	description
F	10.14.09		UPDATED FOR 2007 FBC
G	06.02.11		GENERAL REVISION
H	08.04.11		REV. PER BNC COMMENTS
I	02.24.12		UPDATED TO 2010 FBC
J	06.23.14		NO CHANGE THIS SHEET

date: 03–12–98
scale: 3/8" = 1"
dr. by: HAMID
chk. by:

drawing no.
W98–23

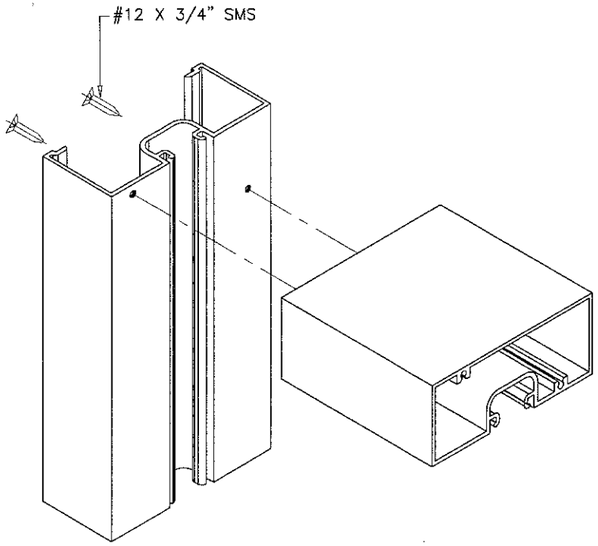

FRAME UPPER CORNER

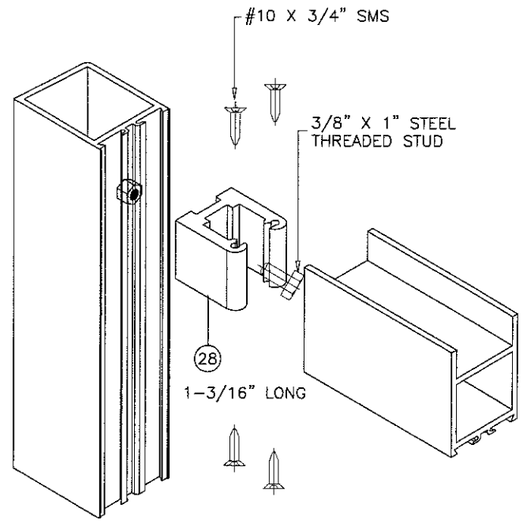

DOOR LEAF UPPER CORNER

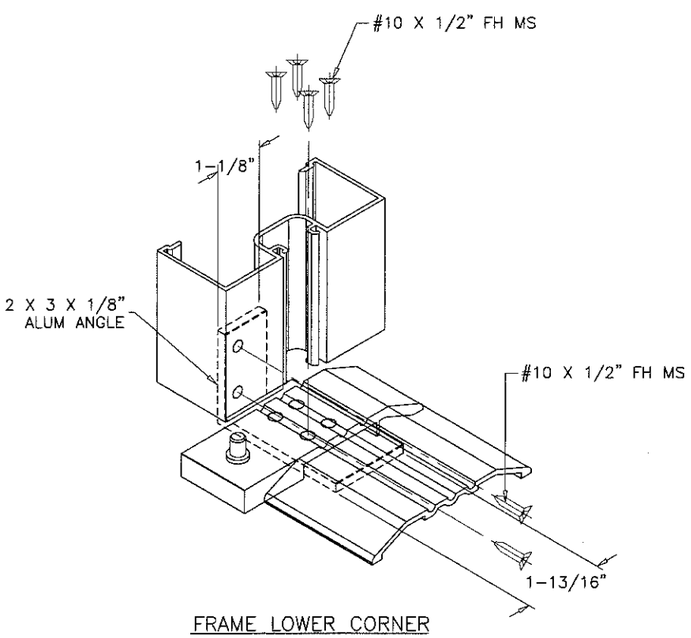

FRAME LOWER CORNER

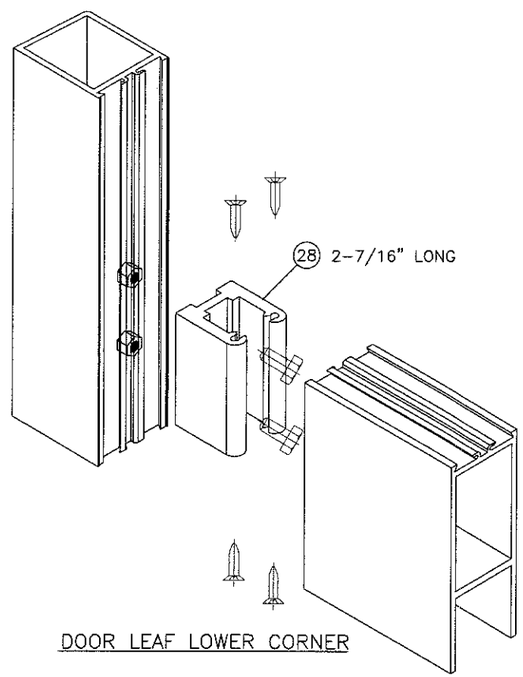

DOOR LEAF LOWER CORNER

ITEM #	PART #	REQD.	DESCRIPTION	REMARKS
1	5003	AS REQD.	4" TRANSOM HEAD	6063-T6
1A	5503	AS REQD.	4-1/2" TRANSOM HEAD	6063-T6
2	5007	1	4" FRAME HEAD	6063-T6
2A	5502	1	4-1/2" FRAME HEAD	6063-T6
3	20913	AS REQD.	DOOR STOP	6063-T6
4	20236	1/ LEAF	TOP RAIL	6063-T6
5	20234	AS REQD.	GLASS STOP	6063-T6
6	46812	AS REQD.	GLAZING GASKET	NEOPRENE
7	–	AS REQD.	BULB WEATHERSTRIPPING	SOFT PVC
8	20238	1/ LEAF	BOTTOM RAIL	6063-T5
9	20305	1	THRESHOLD	6063-T5
10	5001	2	4" OPEN BACK JAMB	6063-T6
10A	5501	2	4-1/2" OPEN BACK JAMB	6063-T6
11	20237	AS REQD.	HINGE OR PIVOT STILE	–
12	20240	1/ LEAF	FIX STILE (INACTIVE PANEL)	6063-T5
13	20272	1/ LEAF	LOCK STILE (ACTIVE PANEL)	6063-T5
14	20271	1/ DOOR	ASTRAGAL FOR XX ONLY	6063-T5
15	10741	–	PUSH BAR (OPTIONAL)	6063-T5
16	AGP-123	AS REQD.	HANDLE	6063-T5
17	14234	2/ LEAF	RESTRAINING PINS (2-1/2" X 1/4")	STEEL
18	30708	1/ LEAF	TOP FRAME OFFSET PIVOT	–
19	30709	1/ LEAF	TOP DOOR OFFSET PIVOT	–
20	30710	1/ LEAF	BOTTOM DOOR OFFSET PIVOT	–
21	30711	1/ LEAF	THRESHOLD OFFSET PIVOT	–
22	5009	AS REQD.	ANCHOR PLATE, 3" LONG AT ANCHORS	6063-T6
23	–	AS REQD.	4" HORIZONTAL	6063-T5
23A	5506	AS REQD.	4-1/2" HORIZONTAL	6063-T5
24	1085	–	JACKSON PANIC DEVICE	SEE SHEET 2
25	–	2/ LEAF	FLUSH BOLT (INACTIVE LEAF ONLY)	SEE SHEET 1
26	–	1/ LEAF	THREE POINT LOCK (ACTIVE LEAF ONLY)	SEE SHEET 1
27	AGP-292	1/ DOOR	THRESHOLD RISER	6063-T5
28	–	–	SHEAR BLOCK	6063-T5
29	–	2/ LITE	SETTING BLOCK, DUROMETER 80±5 SHORE A	EPDM
30	–	AS REQD.	GLAZING GASKET	NEOPRENE
31	5504	AS REQD.	TRANSOM GLASS STOP	6063-T5
32	–	2/ LITE	SETTING BLOCK, DUROMETER 87±5 SHORE A	EPDM

PRODUCT RENEWED
as complying with the Florida
Building Code
Acceptance No. 16-0502.02
Expiration Date 9/14/21
By Ishwar Lalwani
Miami Dade Product Control

Engr: JAVAD AHMAD
CIVIL
FLA. PE # 70592
C.A.N. 3538

JUN 26 2014

PRODUCT REVISED
as complying with the Florida
Building Code
Acceptance No 14-0728.05
Expiration Date Sept. 14, 2016
By Manuel Sirez
Miami Dade Product Control

AL-FAROOQ CORPORATION
ENGINEERS & PRODUCT DEVELOPMENT
1235 S.W. 87 AVE
MIAMI, FLORIDA 33174
TEL. (305) 264-8100 FAX. (305) 262-6978
COMP-ANL\W98-23GG

S-5000 NARROW STILE ENTRANCE DOOR (N.L.)

GOPI GLASS CORPORATION
7450 N.W. 41 STREET
MIAMI, FL. 33166
TEL. (305) 592-2009 FAX. (305) 477-0992

revisions:

no	date	by	description
F	10.14.09		UPDATED FOR 2007 FBC
G	06.02.11		GENERAL REVISION
H	08.04.11		REV. PER BNC COMMENTS
I	02.24.12		UPDATED TO 2010 FBC
J	06.23.14		NO CHANGE THIS SHEET

date: 03-12-98
scale: 3/8" = 1"
dr. by: HAMID
chk. by:

drawing no.
W98-23

HORIZONTAL TRANSOM LOAD CAPACITY-PSF				
DOOR WIDTH INCHES	TRANSOM HEIGHT INCHES	MAX. DOOR HEIGHT INCHES	4" HORIZONTAL EXT. (+) INT. (−)	4-1/2" HORIZONTAL EXT. (+) INT. (−)
75-1/2	12	84	73.0 (6)	73.0 (8)
	24		66.0 (6)	73.0 (8)
	36		59.0 (8)	73.0 (8)

NUMBER IN PARENTHESIS INDICATE NUMBER OF ANCHORS AT TRANSOM ENDS FOR INSTALLATIONS INTO BLOCK WALL

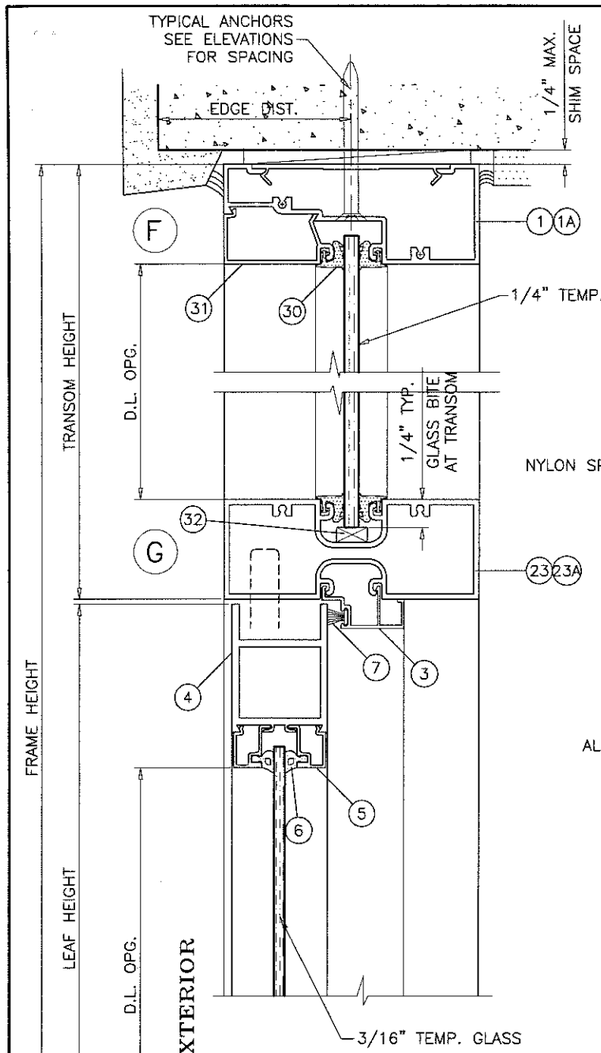

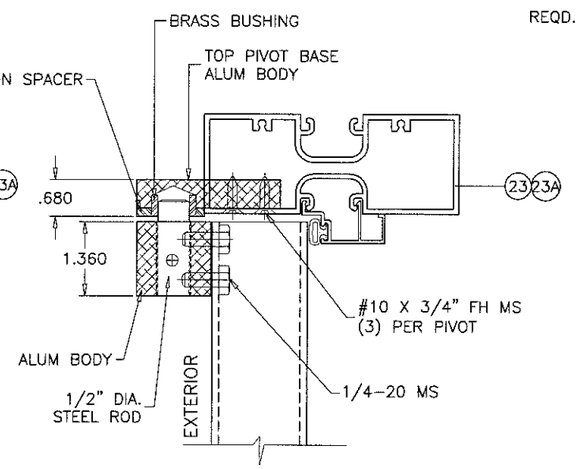

TOP FRAME OFFSET PIVOT

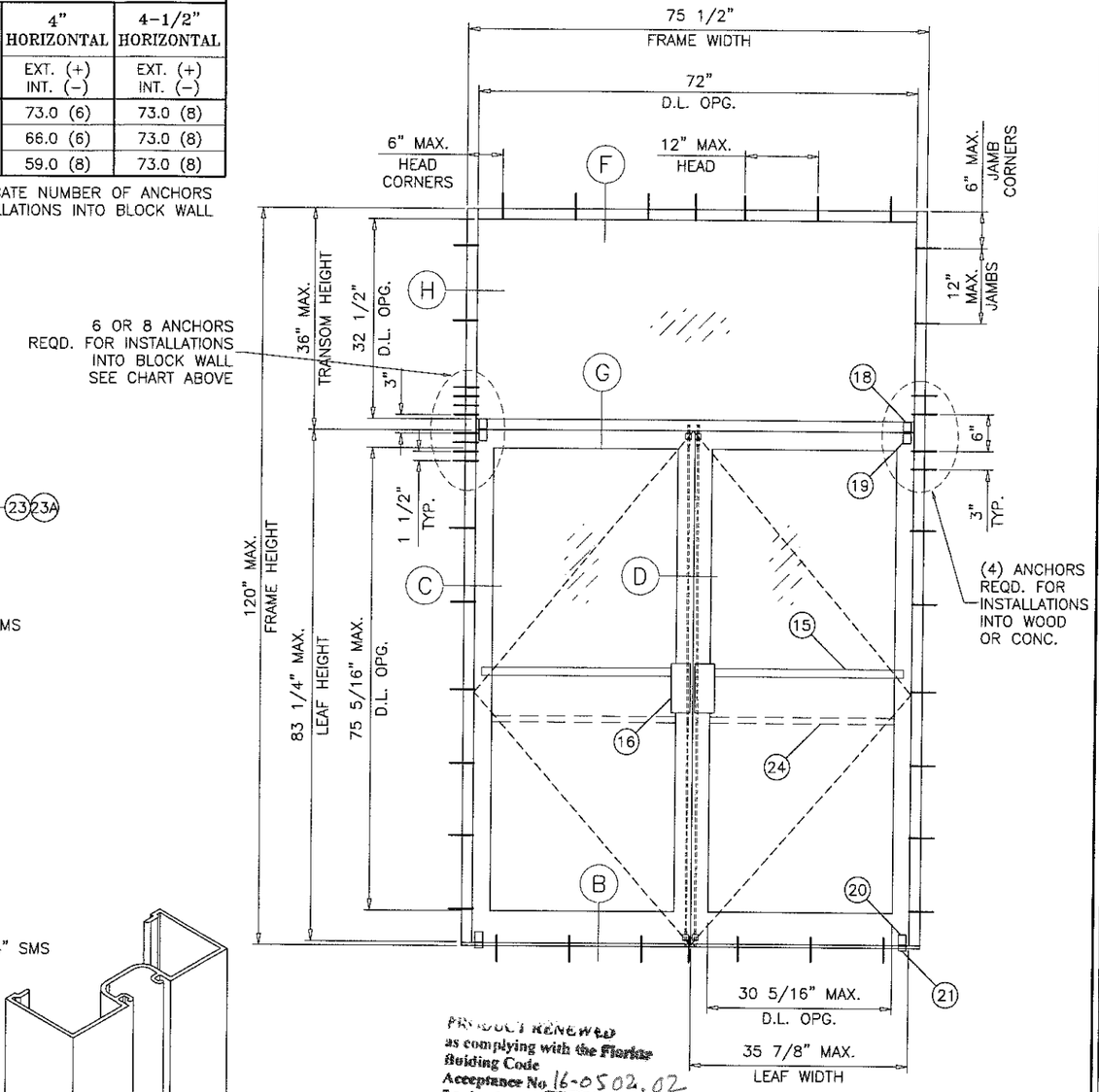

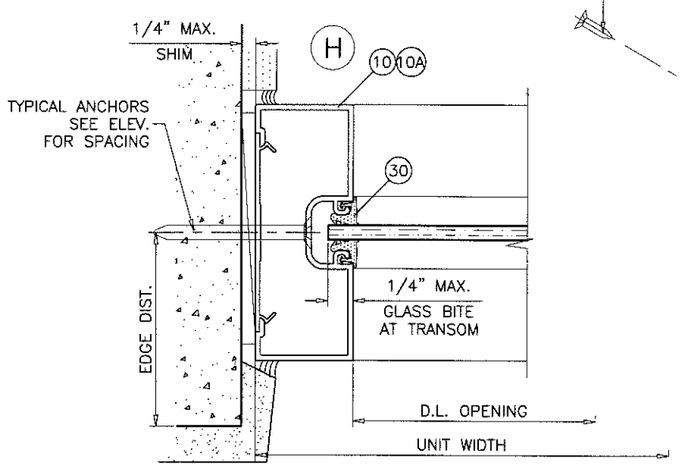

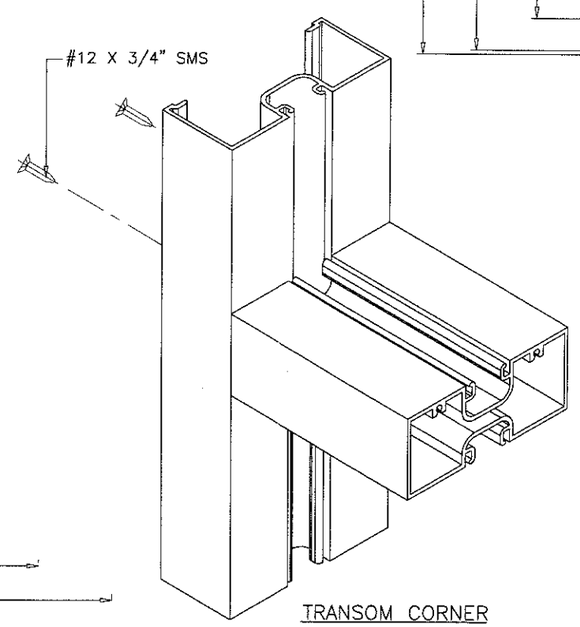

TRANSOM CORNER

PRODUCT RENEWED
as complying with the Florida Building Code
Acceptance No. 16-0502.02
Expiration Date 9/14/21
By
Miami-Dade Product Control

Engr: JAVAD AHMAD
CIVIL
FLA. PE # 70592
C.A.N. 3538

JUN 26 2014

PRODUCT REVISED
as complying with the Florida Building Code
Acceptance No 14-0728.05
Expiration Date Sept. 14, 2016
By
Miami-Dade Product Control

AL-FAROOQ CORPORATION
ENGINEERS & PRODUCT DEVELOPMENT
1235 S.W. 87 AVE
MIAMI, FLORIDA 33174
TEL. (305) 264-8100 FAX. (305) 262-6978

COMP-ANL\W98-23GG

S-5000 NARROW STILE ENTRANCE DOOR (N.I.)

GOPI GLASS CORPORATION
7450 N.W. 41 STREET
MIAMI, FL. 33166
TEL. (305) 592-2009 FAX. (305) 477-0992

revisions:

no	date	by	description
F	10.14.09		UPDATED FOR 2007 FBC
G	06.02.11		GENERAL REVISION
H	08.04.11		REV. PER BNC COMMENTS
I	02.24.12		NO CHANGE THIS SHEET
J	06.23.14		UPDATED TO 2014 FBC

date: 03-12-98
scale: 3/8" = 1"
dr. by: HAMID
chk. by:

drawing no.
W98-23

sheet 7 of 7