MIAMI-DADE COUNTY
DEPARTMENT OF REGULATORY AND ECONOMIC RESOURCES (RER)
BOARD AND CODE ADMINISTRATION DIVISION

MIAMI-DADE COUNTY
PRODUCT CONTROL SECTION
11805 SW 26 Street, Room 208
T (786) 315-2590 F (786) 315-2599
www.miamidade.gov/economy

NOTICE OF ACCEPTANCE (NOA)

PGT Industries, Inc.
1070 Technology Drive
North Venice, FL 34275

SCOPE:

This NOA is being issued under the applicable rules and regulations governing the use of construction materials. The documentation submitted has been reviewed and accepted by Miami-Dade County RER - Product Control Section to be used in Miami Dade County and other areas where allowed by the Authority Having Jurisdiction (AHJ).

This NOA shall not be valid after the expiration date stated below. The Miami-Dade County Product Control Section (In Miami-Dade County) and/or the AHJ (in areas other than Miami-Dade County) reserve the right to have this product or material tested for quality assurance purposes. If this product or material fails to perform in the accepted manner, the manufacturer will incur the expense of such testing and the AHJ may immediately revoke, modify, or suspend the use of such product or material within their jurisdiction. RER reserves the right to revoke this acceptance, if it is determined by Miami–Dade County Product Control Section that this product or material fails to meet the requirements of the applicable building code.

This product is approved as described herein, and has been designed to comply with the Florida Building Code, including the High Velocity Hurricane Zone.-

DESCRIPTION: Series "SS-3500" Aluminum Storefront System – L.M.I.

APPROVAL DOCUMENT: Drawing No. **MD-3500-2-LM**, titled "Storefront Window System Details - LM", sheets 1 through 16 of 16, dated 03/26/16, prepared by manufacturer, signed and sealed by Anthony Lynn Miller, P.E., bearing the Miami-Dade County Product Control Revision stamp with the Notice of Acceptance number and expiration date by the Miami-Dade County Product Control Section.

MISSILE IMPACT RATING: Large and Small Missile Impact Resistant

LABELING: Each unit shall bear a permanent label with the manufacturer's name or logo, city, state, model/series, and following statement: "Miami-Dade County Product Control Approved", unless otherwise noted herein.

RENEWAL of this NOA shall be considered after a renewal application has been filed and there has been no change in the applicable building code negatively affecting the performance of this product.

TERMINATION of this NOA will occur after the expiration date or if there has been a revision or change in the materials, use, and/or manufacture of the product or process. Misuse of this NOA as an endorsement of any product, for sales, advertising or any other purposes shall automatically terminate this NOA. Failure to comply with any section of this NOA shall be cause for termination and removal of NOA.

ADVERTISEMENT: The NOA number preceded by the words Miami-Dade County, Florida, and followed by the expiration date may be displayed in advertising literature. If any portion of the NOA is displayed, then it shall be done in its entirety.

INSPECTION: A copy of this entire NOA shall be provided to the user by the manufacturer or its distributors and shall be available for inspection at the job site at the request of the Building Official.

This NOA **revises NOA# 15-0612.08** and consists of this page 1 and evidence pages E-1 and E-2, as well as approval document mentioned above.

The submitted documentation was reviewed by **Manuel Perez, P.E.**

MIAMI-DADE COUNTY APPROVED

5/27/16

PGT Industries, Inc.

NOTICE OF ACCEPTANCE: EVIDENCE SUBMITTED

A. DRAWINGS

1. Manufacturer's die drawings and sections.
   (Submitted under previous NOA No. 12-1005.01)
2. Drawing No. **MD-3500-2-LM**, titled "Storefront Window System Details - LM", sheets 1 through 16 of 16, dated 03/23/16, prepared by manufacturer, signed and sealed by Anthony Lynn Miller, P.E.

B. TESTS

1. Test reports on: 1) Air Infiltration Test, per FBC, TAS 202-94
   2) Uniform Static Air Pressure Test, Loading per FBC, TAS 202-94
   3) Water Resistance Test, per FBC, TAS 202-94
   4) Large Missile Impact Test per FBC, TAS 201-94
   5) Cyclic Wind Pressure Loading per FBC, TAS 203-94
   6) Forced Entry Test, per AAMA 1304-02, FBC 2411.3.2.1, and TAS 202-94

   along with marked–up drawings and installation diagram of a storefront system with French door and transom, prepared by Fenestration Testing Laboratory, Inc., Test Report No. **FTL-7137**, dated 12/10/12, signed and sealed by Marlin D. Brinson, P.E.
   (Submitted under previous NOA No. 12-1005.01)
2. Test reports on: 1) Uniform Static Air Pressure Test, Loading per FBC, TAS 202-94
   3) Water Resistance Test, per FBC, TAS 202-94
   4) Large Missile Impact Test per FBC, TAS 201-94
   5) Cyclic Wind Pressure Loading per FBC, TAS 203-94
   6) Forced Entry Test, per AAMA 1304-02, FBC 2411.3.2.1, and TAS 202-94

   along with marked–up drawings and installation diagram of a storefront system with French door and transom, prepared by Fenestration Testing Laboratory, Inc., Test Report No. **FTL-7208**, dated 01/04/13, signed and sealed by Marlin D. Brinson, P.E.
   (Submitted under previous NOA No. 12-1005.01)

C. CALCULATIONS

1. Anchor verification calculations and structural analysis, complying with **FBC-5th Edition (2014)**, dated 06/05/15 and 05/02/16, prepared by manufacturer, signed and sealed by Anthony Lynn Miller, P.E.
2. Glazing complies with **ASTM E1300-09**

D. QUALITY ASSURANCE

1. Miami-Dade Department of Regulatory and Economic Resources (RER).

Manuel Perez, P.E.
Product Control Examiner
NOA No. 16-0505.04
Expiration Date: January 17, 2018
Approval Date: June 02, 2016

NOTICE OF ACCEPTANCE: EVIDENCE SUBMITTED

E. MATERIAL CERTIFICATIONS

1. Notice of Acceptance No. **14-0916.10** issued to **Kuraray America, Inc.** for their **"Butacite® PVB Glass Interlayer"** dated 04/25/15, expiring on 12/11/16.
2. Notice of Acceptance No. **14-0916.11** issued to **Kuraray America, Inc.** for their **"SentryGlas® (Clear and White) Glass Interlayers"** dated 06/25/15, expiring on 07/04/18.
3. QUANEX I.G. Super Spacer by Edgetech I.G., Inc. exterior flexible, organic foam spacer complying with ASTM C518 passed, ASTM F1249 passed, ASTM D3985 passed, ASTM D395B 22 HRS 185°F and ASTM E2190 passed.

F. STATEMENTS

1. Statement letter of conformance, complying with **FBC-5th Edition (2014)**, dated May 2, 2016, issued by manufacturer, signed and sealed by Anthony Lynn Miller, P.E.
2. Statement letter of no financial interest, dated May 2, 2016, issued by manufacturer, signed and sealed by Anthony Lynn Miller, P.E.
3. Laboratory compliance letter for Test Reports No. **FTL-7137**, dated 12/10/12 and **FTL-7208**, dated 01/04/13, issued by Fenestration Testing Laboratory, Inc., both signed and sealed by Marlin D. Brinson, P.E.

G. OTHERS

1. Notice of Acceptance No. **15-0612.08**, issued to PGT Industries, Inc. for their Series "SS-3500" Aluminum Storefront System - L.M.I. approved on 07/30/15 and expiring on 01/17/18.

Manuel Perez

Manuel Perez, P.E.
Product Control Examiner
NOA No. 16-0505.04
Expiration Date: January 17, 2018
Approval Date: June 02, 2016

GENERAL NOTES: SS-3500 IMPACT-RESISTANT STOREFRONT WINDOW SYSTEM

GENERAL NOTES:

1. THIS PRODUCT HAS BEEN DESIGNED & TESTED TO COMPLY WITH THE REQUIREMENTS OF THE FBC, INCLUDING THE HIGH VELOCITY HURRICANE ZONE (HVHZ).
2. SHUTTERS ARE NOT REQUIRED PER FBC REQUIREMENTS, WHEN USED IN WIND-BORNE DEBRIS REGIONS.
3. GLAZING TYPE: SEE GLAZING DETAILS ON SHEET 15.
4. DESIGN PRESSURES:
   A) NEGATIVE DESIGN LOADS BASED ON STRUCTURAL & CYCLE TESTING AND GLASS PER ASTM E1300
   B) POSITIVE DESIGN LOADS BASED ON WATER INFILTRATION, STRUCTURAL & CYCLE TESTING AND GLASS PER ASTM E1300
5. THE ANCHORAGE METHODS SHOWN HAVE BEEN DESIGNED TO RESIST THE WINDLOADS CORRESPONDING TO THE REQUIRED DESIGN PRESSURE. THE 33-1/3% STRESS INCREASE HAS NOT BEEN USED IN THE DESIGN OF THIS PRODUCT. THE 1.6 LOAD DURATION FACTOR WAS USED FOR THE EVALUATION OF ANCHORS INTO WOOD.
6. INSTALLATION SCREWS & FRAME CORNERS TO BE SEALED WITH NARROW JOINT SEALANT.
7. DISSIMILAR MATERIALS THAT COME INTO CONTACT, INCLUDING PRODUCT FRAMING, ANCHORAGE AND OPENING SUBSTRATES, SHALL BE COATED OR PROTECTED TO PREVENT CORROSIVE REACTIONS AS REQUIRED BY THE FLORIDA BUILDING CODE.
8. REFERENCES: ELCO ULTRACON & CRETEFLEX NOA'S, ITW TAPCON NOA; TEST REPORTS FTL-7137, 7208 & 8717

ANCHOR NOTES:

1. FOR CONCRETE/CMU SUBSTRATE APPLICATIONS IN MIAMI-DADE COUNTY, USE ONLY MIAMI-DADE COUNTY APPROVED ELCO ANCHORS. SEE TABLE 1 ON THIS SHEET FOR EMBEDMENT, EDGE DISTANCE AND SUBSTRATE REQUIREMENTS.
2. FOR SUBSTRATE APPLICATIONS SEE TABLE 1 ON THIS SHEET.
3. WOOD BUCKS DEPICTED AS 1X ARE LESS THAN 1-1/2" THICK. PROPERLY SECURED, 1X WOOD BUCKS ARE OPTIONAL IF UNIT IS INSTALLED DIRECTLY TO SOLID CONCRETE OR CMU. WOOD BUCKS DEPICTED AS 2X ARE 1-1/2" THICK OR GREATER. 1X AND 2X BUCKS (WHEN USED) SHALL BE DESIGNED TO PROPERLY TRANSFER LOADS TO THE STRUCTURE. BUCK DESIGN AND INSTALLATION IS THE RESPONSIBILITY OF THE ENGINEER OR ARCHITECT OF RECORD & TO BE REVIEWED BY THE BUILDING OFFICIAL.
4. SHIMS ARE REQUIRED AT EACH ANCHOR LOCATION WHERE THE PRODUCT IS NOT FLUSH TO THE SUBSTRATE. USE SHIMS CAPABLE OF TRANSFERRING APPLIED LOADS. WOOD BUCKS, BY OTHERS, MUST BE SUFFICIENTLY ANCHORED TO RESIST LOADS IMPOSED ON THEM BY THE WINDOW.
5. METAL SUBSTRATE TO MEET MIN. STRENGTH AND THICKNESS REQUIREMENTS PER THE FBC AND TO BE REVIEWED BY THE AUTHORITY HAVING JURISDICTION.
6. IF SILL IS TIGHT TO SUBSTRATE, GROUT OR OTHER MATERIAL IS NOT REQUIRED. IF USED, NON-SHRINK, NON-METALLIC GROUT, MAX. 1/4" THICK & 3400 PSI MIN., (DONE BY OTHERS) MUST FULLY SUPPORT THE ENTIRE LENGTH OF THE SILL THAT IS NOT TIGHT TO THE SUBSTRATE, AND TRANSFER SHEAR LOAD TO SUBSTRATE. IF SUBSTRATE IS WOOD, 30# FELT PAPER OR MASTIC IS REQUIRED BETWEEN THE GROUT AND WOOD SUBSTRATE, OR AS APPROVED BY THE AUTHORITY HAVING JURISDICTION.

INSTRUCTIONS:

1. DETERMINE THE BUILDING'S REQUIRED DESIGN PRESSURE USING THE ASCE 7 STANDARD. THE PRODUCT'S DESIGN PRESSURE MUST MEET OR EXCEED THIS VALUE.
2. DETERMINE THE ANCHOR TYPE FROM TABLE 1, SHEET 1.
3. DETERMINE THE GLASS DESIGN PRESSURE FROM TABLE 2, SHEET 4.
4. JAMB ANCHOR SPACING IS GIVEN IN TABLES 5 & 6, SHEETS 7 & 8 AND HAVE BEEN CALCULATED FOR THE PRODUCT'S MAXIMUM DP.
5. MID-PANEL ANCHOR QUANTITIES ARE GIVEN IN TABLES 7 & 8, SHEETS 9 & 10 AND HAVE BEEN CALCULATED FOR THE PRODUCT'S MAXIMUM DP.
6. IF THE STOREFRONT WINDOW IS ATTACHED TO ANOTHER WINDOW THROUGH A COMMON MULLION:
   A) DETERMINE THE MULLION DESIGN PRESSURE FROM TABLE 9, SHEET 11.
   B) DETERMINE THE MAXIMUM DESIGN PRESSURE DUE TO MULLION CLUSTER ANCHORAGE FROM TABLES 3 OR 4, SHEETS 5-6 BASED ON YOUR SHIM SPACE, ANCHOR TYPE AND THE QUANTITY OF ANCHORS REQUIRED TO ATTAIN THE REQUIRED DESIGN PRESSURE.
7. THE LOWEST DESIGN PRESSURE FROM 3 & 6 ABOVE, SHALL BE USED FOR THE ENTIRE ASSEMBLY.
8. IF COMBINED WITH ANOTHER ASSEMBLY WITH A SEPARATE APPROVAL, (STOREFRONT ENTRANCE DOOR, PTAC LOUVER OR WINDOW INSERT) THE LESSER DESIGN PRESSURE VALUE OF ANY ASSEMBLY OR THE STOREFRONT WINDOW SHALL BE THE DESIGN PRESSURE FOR THE ENTIRE SYSTEM.

TABLE 1:

Group	Anchor	Substrate	Min. Edge Distance	Min. Embedment	Min. O.C. Distance
A	#14 Steel or 410 SS SMS (G5)	P.T. Southern Pine (SG=0.55)	1"	1-3/8"	1"
B	#14 Steel or 410 SS SMS (G5)	Aluminum, 6063-T5* (0.125" min. thickness)	3/8"	1/8"	5/8"
		Steel, A36* (0.125" min. thickness)	3/8"	1/8"	5/8"
C	1/4" Elco Ultracon	Concrete (min. 2.85 ksi)	2-1/2"	1-3/8"	3"
		Grout-Filled CMU, (ASTM C-90)	2-1/2"	1-3/4"	4"
		Ungrouted CMU, (ASTM C-90)	2-1/2"	1-1/4"	6"
	1/4" Elco 410 S.S. CreteFlex	Ungrouted CMU, (ASTM C-90)	2-1/2"	1-1/4"	6"
	5/16" Elco Ultracon	Ungrouted CMU, (ASTM C-90)	3-1/8"	1-1/4"	6"
D	1/4" Elco 410 S.S. CreteFlex	Concrete (min. 3.35 ksi)	2-1/2"	1-3/4"	3"
	5/16" Elco Ultracon	Concrete (min. 3.52 ksi)	3-1/8"	2"	3"
		Grout-Filled CMU, (ASTM C-90)	2-1/2"	2-1/4"	5"
E	3/8" Large Diameter ITW Tapcon	Concrete (min. 3 ksi)	3"	1-1/2"	4"
		Ungrouted CMU, (ASTM C-90)	3"	1-1/2"	6"

IMPACT RATING
RATED FOR LARGE & SMALL MISSILE IMPACT RESISTANCE

* MIN. OF 3 THREADS BEYOND THE METAL SUBSTRATE. METAL SUBSTRATE TO MEET MIN. STRENGTH AND THICKNESS REQUIREMENTS PER CURRENT FLORIDA BUILDING CODE AND TO BE REVIEWED BY THE AUTHORITY HAVING JURISDICTION.

FOR STEEL STUDS, MIN. FU=45 KSI & MIN. FY=33 KSI.

"UNGROUTED CMU" VALUES MAY BE USED FOR GROUTED CMU APPLICATIONS.

ALL ANCHOR HEAD TYPES ARE ALLOWED.

CONTENTS:

GENERAL NOTES, INSTRUCTIONS.....1
ANCHOR TYPES, TABLE 1.....1
ELEVATIONS.....2-3
GLASS DP, TABLE 2.....4
MULLION ANCHOR CLUSTER DP - 1/4" SHIM, TABLE 3.....5
MULLION ANCHOR CLUSTER DP - 1/2" SHIM, TABLE 4.....6
JAMB ANCHOR SPACING - 1/4" SHIM, TABLE 5.....7
JAMB ANCHOR SPACING - 1/2" SHIM, TABLE 6.....8
MID-PANEL ANCHOR QUANTIY - 1/4" SHIM, TABLE 7.....9
MID-PANEL ANCHOR QUANTIY - 1/2" SHIM, TABLE 8.....10
VERTICAL MULLION DP, TABLE 9.....11
HORIZ. SECTIONS.....12
VERT. SECTIONS.....13
PTAC & WINDOW INSERT SECTIONS.....14
GLAZING & IG SPACER DETAILS.....15
EXTRUSION PROFILES.....16
CORNER DETAILS.....16
PARTS LIST, TABLE 10.....16

STANDARDS USED:

- 2014 FLORIDA BUILDING CODE (FBC), 5TH EDITION
- ASTM E1300-09
- ANSI/AF&PA NDS-2012 FOR WOOD CONSTRUCTION
- ALUMINUM DESIGN MANUAL, ADM-2010
- AISI-S100-07/S2-2010

PRODUCT REVISED
as complying with the Florida Building Code
Acceptance No 16-0505.04
Expiration Date Jan. 17, 2018
By Manuel Perez
Miami-Dade Product Control

ANTHONY LYNN MILLER LICENSE No. 58705 STATE OF FLORIDA PROFESSIONAL ENGINEER
5/2/16

A. LYNN MILLER, P.E.
P.E.# 58705

PGT®

1070 TECHNOLOGY DRIVE
N. VENICE, FL 34275
P.O. BOX 1529
NOKOMIS, FL 34274

CERT. OF AUTH. #29296

Revised By:	Date:	Revision:
Revised By:	Date:	Revision:

Description:	Drawn By:
GENERAL NOTES	J ROSOWSKI

Title:	Date:
STOREFRONT WINDOW SYSTEM DETAILS - LM	03/23/16

Series/Model:	Scale:	Sheet:	Drawing No.	Rev:
SS-3500	NTS	1 OF 16	MD-3500-2-LM	

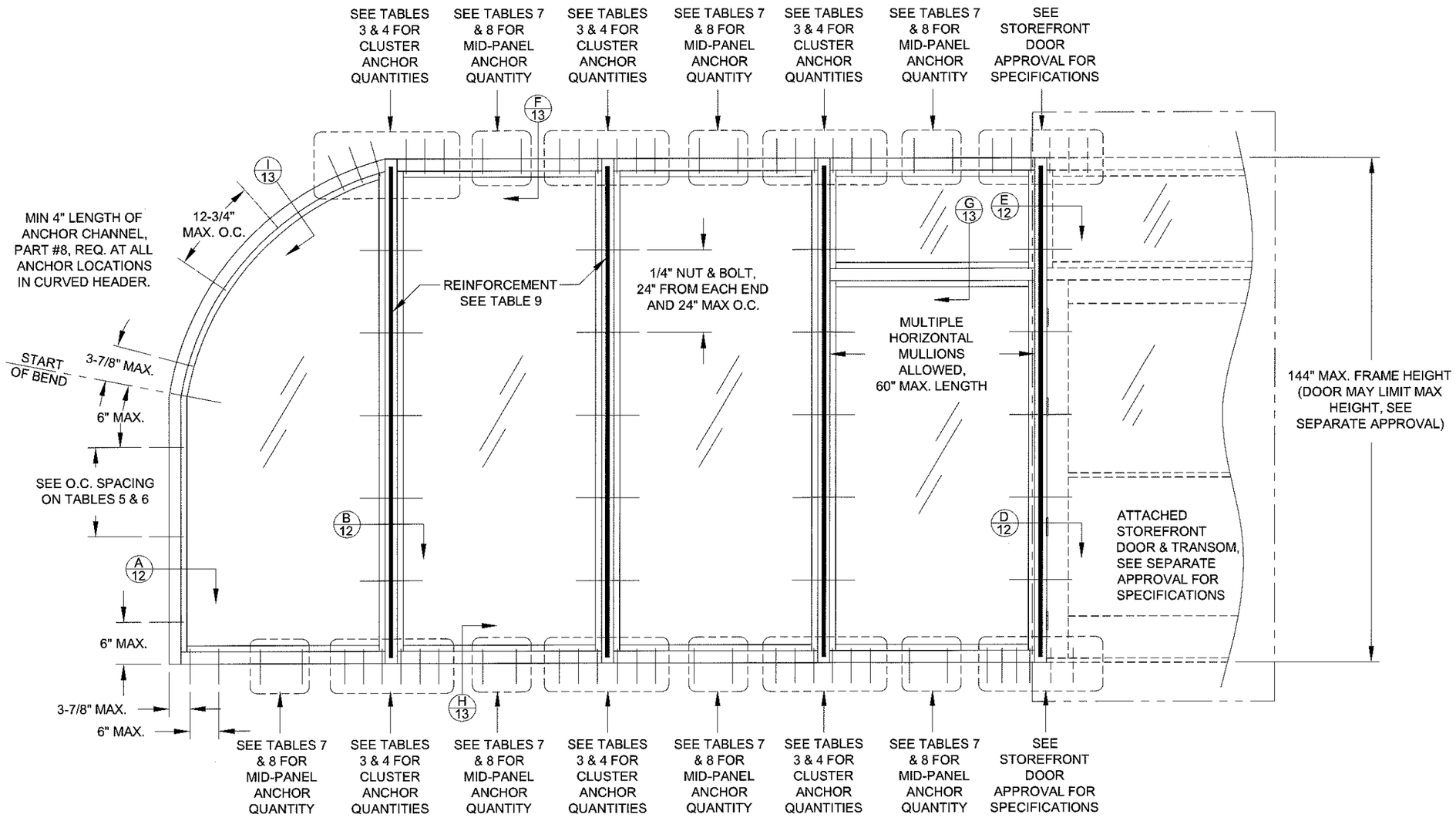

TYP. ELEVATION OF STOREFRONT WINDOW SYSTEM WITH EXAMPLES OF CURVED HEADER, HORIZONTAL MULLION & STOREFRONT DOOR

NOTES:

1. IF COMBINED WITH ANOTHER ASSEMBLY WITH A SEPARATE APPROVAL, (STOREFRONT ENTRANCE DOOR, PTAC LOUVER OR WINDOW INSERT) THE LESSER DESIGN PRESSURE VALUE OF ANY ASSEMBLY OR THE STOREFRONT WINDOW SHALL BE THE DESIGN PRESSURE FOR THE ENTIRE SYSTEM.
2. SEE TABLES FOR MAXIMUM ALLOWED SIZES.
3. SEE SHEET 4 FOR DAYLIGHT OPENING (DLO) FORMULAS.

PRODUCT REVISED
as complying with the Florida Building Code
Acceptance No 16-0505.04
Expiration Date Jan. 11, 2018
By Manuel Perez
Miami Dade Product Control

Rev A

1070 TECHNOLOGY DRIVE
N. VENICE, FL 34275
P.O. BOX 1529
NOKOMIS, FL 34274
(941)-480-1600
CERT. OF AUTH. #29296

Series	Scale	Sheet	DWG No.	Rev.
SS-3500	NTS	2 OF 16	MD-3500-2-LM	

Desc. STOREFRONT WINDOW SYSTEM DETAILS - LM

Title ELEVATION A

Drawn By J ROSOWSKI

Date 03/23/16

A. LYNN MILLER, P.E.
P.E.# 58705

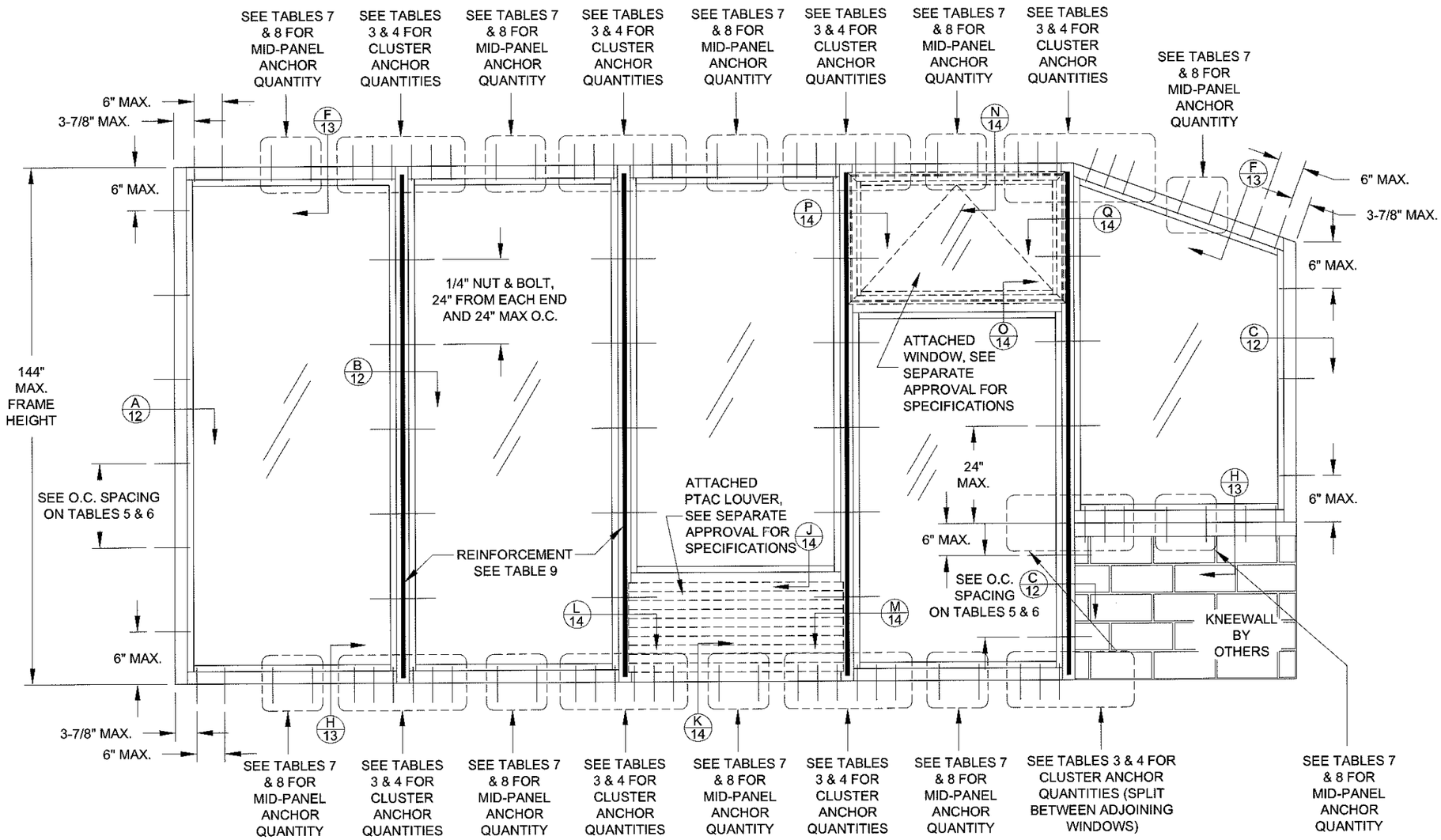

TYP. ELEVATION OF STOREFRONT WINDOW SYSTEM WITH EXAMPLES OF WINDOW INSERT, PTAC INSERT, KNEEWALL & ANGLED HEADER

NOTES:

1. IF COMBINED WITH ANOTHER ASSEMBLY WITH A SEPARATE APPROVAL, (STOREFRONT ENTRANCE DOOR, PTAC LOUVER OR WINDOW INSERT) THE LESSER DESIGN PRESSURE VALUE OF ANY ASSEMBLY OR THE STOREFRONT WINDOW SHALL BE THE DESIGN PRESSURE FOR THE ENTIRE SYSTEM.
2. SEE TABLES FOR MAXIMUM ALLOWED SIZES.
3. AWNING WINDOW INSERT SHOWN BUT MAY BE ANY APPROVED PGT WINDOW WITH A FLANGED FRAME.
4. SEE SHEET 4 FOR DAYLIGHT OPENING (DLO) FORMULAS.
5. MULTIPLE INSERTS WITHIN THE SAME STOREFRONT WINDOW ALLOWED.

PRODUCT REVISED
as complying with the Florida Building Code
Acceptance No 16-0525.04
Expiration Date Jan 17, 2018
By Manuel Perez
Miami Dade Product Control

Rev A

1070 TECHNOLOGY DRIVE
N. VENICE, FL 34275
P.O. BOX 1529
NOKOMIS, FL 34274
(941)-480-1600

PGT® CERT. OF AUTH. #29296

Series	Desc.	Title	Scale	Sheet	DWG No.	Rev.	Date	Drawn By
SS-3500	STOREFRONT WINDOW SYSTEM DETAILS - LM	ELEVATION B	NTS	3 OF 16	MD-3500-2-LM		03/23/16	J ROSOWSKI

ANTHONY LYNN MILLER LICENSE No. 58705 STATE OF FLORIDA PROFESSIONAL ENGINEER
5/2/16

A. LYNN MILLER, P.E.
P.E.# 58705

TABLE 2:

Glass DP, (+/-psf) & Maximum Size									
Centerline Width	Frame Height	DLO Width	DLO Height	Glass Type "A"	Glass Type "B"	Glass Type "C"	Glass Type "D"	Glass Type "E"	Glass Type "F"
24"	48"	20-1/4"	42-1/2"	90.0	80.0	120.0	90.0	80.0	120.0
30"		26-1/4"		90.0	80.0	120.0	90.0	80.0	120.0
36"		32-1/4"		90.0	80.0	120.0	90.0	80.0	120.0
42"		38-1/4"		90.0	80.0	120.0	90.0	80.0	120.0
48"		44-1/4"		90.0	80.0	120.0	90.0	80.0	120.0
54"		50-1/4"		90.0	80.0	120.0	90.0	80.0	120.0
60"		56-1/4"		90.0	80.0	120.0	90.0	80.0	120.0
70"		66-1/4"		90.0	80.0	120.0	90.0	80.0	120.0
72"		68-1/4"		90.0	80.0	120.0	90.0	80.0	120.0
84"		80-1/4"		84.5	80.0	120.0	84.5	80.0	120.0
90"		86-1/4"		82.3	80.0	120.0	82.3	80.0	120.0
92"		88-1/4"		81.7	80.0	120.0	81.7	80.0	120.0
96"		92-1/4"		80.5	80.0	120.0	80.5	80.0	120.0
102"		98-1/4"				120.0			120.0
108"		104-1/4"				120.0			120.0
120"		116-1/4"				120.0			120.0
132"		128-1/4"				100.0			100.0
144"		140-1/4"				100.0			100.0
24"	60"	20-1/4"	54-1/2"	90.0	80.0	120.0	90.0	80.0	120.0
30"		26-1/4"		90.0	80.0	120.0	90.0	80.0	120.0
36"		32-1/4"		90.0	80.0	120.0	90.0	80.0	120.0
42"		38-1/4"		90.0	80.0	120.0	90.0	80.0	120.0
48"		44-1/4"		90.0	80.0	120.0	90.0	80.0	120.0
54"		50-1/4"		90.0	80.0	120.0	90.0	80.0	120.0
60"		56-1/4"		90.0	80.0	120.0	90.0	80.0	120.0
70"		66-1/4"		84.5	80.0	120.0	84.5	80.0	120.0
72"		68-1/4"		82.8	80.0	120.0	82.8	80.0	120.0
84"		80-1/4"				119.5			119.5
90"		86-1/4"				115.2			115.2
92"		88-1/4"				114.0			114.0
96"		92-1/4"				111.7			111.7
102"		98-1/4"				100.0			100.0
108"		104-1/4"				100.0			100.0
120"		116-1/4"				100.0			100.0
24"	72"	20-1/4"	66-1/2"	90.0	80.0	120.0	90.0	80.0	120.0
30"		26-1/4"		90.0	80.0	120.0	90.0	80.0	120.0
36"		32-1/4"		90.0	80.0	120.0	90.0	80.0	120.0
42"		38-1/4"		90.0	80.0	120.0	90.0	80.0	120.0
48"		44-1/4"		90.0	80.0	120.0	90.0	80.0	120.0
54"		50-1/4"		85.8	80.0	120.0	85.8	80.0	120.0
60"		56-1/4"		82.8	80.0	120.0	82.8	80.0	120.0
70"		66-1/4"				120.0			120.0
72"		68-1/4"				120.0			120.0
84"		80-1/4"				100.0			100.0
90"		86-1/4"				100.0			100.0
92"		88-1/4"				100.0			100.0
96"		92-1/4"				100.0			100.0
24"	78"	20-1/4"	72-1/2"	90.0	80.0	120.0	90.0	80.0	120.0
30"		26-1/4"		90.0	80.0	120.0	90.0	80.0	120.0
36"		32-1/4"		90.0	80.0	120.0	90.0	80.0	120.0
42"		38-1/4"		90.0	80.0	120.0	90.0	80.0	120.0
48"		44-1/4"		87.2	80.0	120.0	87.2	80.0	120.0
54"		50-1/4"		82.1	80.0	120.0	82.1	80.0	120.0
60"		56-1/4"		78.5	78.5	120.0	78.5	78.5	120.0
70"		66-1/4"				119.4			119.4
72"		68-1/4"				118.9			118.9
84"		80-1/4"				100.0			100.0
90"		86-1/4"				100.0			100.0
92"		88-1/4"				100.0			100.0
24"	84"	20-1/4"	78-1/2"	90.0	80.0	120.0	90.0	80.0	120.0
30"		26-1/4"		90.0	80.0	120.0	90.0	80.0	120.0
36"		32-1/4"		90.0	80.0	120.0	90.0	80.0	120.0
42"		38-1/4"		90.0	80.0	120.0	90.0	80.0	120.0
48"		44-1/4"		84.5	80.0	120.0	84.5	80.0	120.0
54"		50-1/4"		79.1	79.1	120.0	79.1	79.1	120.0
60"		56-1/4"				119.5			119.5
70"		66-1/4"				100.0			100.0
72"		68-1/4"				100.0			100.0
84"		80-1/4"				100.0			100.0

Glass DP, (+/-psf) & Maximum Size									
Centerline Width	Frame Height	DLO Width	DLO Height	Glass Type "A"	Glass Type "B"	Glass Type "C"	Glass Type "D"	Glass Type "E"	Glass Type "F"
24"	90"	20-1/4"	84-1/2"	90.0	80.0	120.0	90.0	80.0	120.0
30"		26-1/4"		90.0	80.0	120.0	90.0	80.0	120.0
36"		32-1/4"		90.0	80.0	120.0	90.0	80.0	120.0
42"		38-1/4"		90.0	80.0	120.0	90.0	80.0	120.0
48"		44-1/4"		82.3	80.0	120.0	82.3	80.0	120.0
54"		50-1/4"				120.0			120.0
60"		56-1/4"				115.2			115.2
70"		66-1/4"				100.0			100.0
72"		68-1/4"				100.0			100.0
24"	97-3/4"	20-1/4"	92-1/4"	90.0	80.0	120.0	90.0	80.0	120.0
30"		26-1/4"		90.0	80.0	120.0	90.0	80.0	120.0
36"		32-1/4"		90.0	80.0	120.0	90.0	80.0	120.0
42"		38-1/4"		87.9	80.0	120.0	87.9	80.0	120.0
48"		44-1/4"		80.0	80.0	120.0	80.0	80.0	120.0
54"		50-1/4"				117.9			117.9
60"		56-1/4"				100.0			100.0
70"		66-1/4"				100.0			100.0
72"		68-1/4"				98.9			98.9
24"	102"	20-1/4"	96-1/2"	90.0	80.0	120.0	90.0	80.0	120.0
30"		26-1/4"		90.0	80.0	120.0	90.0	80.0	120.0
36"		32-1/4"		90.0	80.0	120.0	90.0	80.0	120.0
42"		38-1/4"		86.9	80.0	120.0	86.9	80.0	120.0
48"		44-1/4"				120.0			120.0
54"		50-1/4"				116.1			116.1
60"		56-1/4"				100.0			100.0
70"		66-1/4"				97.9			97.9
24"	108"	20-1/4"	102-1/2"	90.0	80.0	120.0	90.0	80.0	120.0
30"		26-1/4"		90.0	80.0	120.0	90.0	80.0	120.0
36"		32-1/4"		90.0	80.0	120.0	90.0	80.0	120.0
42"		38-1/4"		85.6	80.0	120.0	85.6	80.0	120.0
48"		44-1/4"				120.0			120.0
54"		50-1/4"				100.0			100.0
60"		56-1/4"				100.0			100.0
24"	114"	20-1/4"	108-1/2"	90.0	80.0	120.0	90.0	80.0	120.0
30"		26-1/4"		90.0	80.0	120.0	90.0	80.0	120.0
36"		32-1/4"		90.0	80.0	120.0	90.0	80.0	120.0
42"		38-1/4"				120.0			120.0
48"		44-1/4"				120.0			120.0
54"		50-1/4"				100.0			100.0
60"		56-1/4"				100.0			100.0
24"	120"	20-1/4"	114-1/2"	90.0	80.0	120.0	90.0	80.0	120.0
30"		26-1/4"		90.0	80.0	120.0	90.0	80.0	120.0
36"		32-1/4"		90.0	80.0	120.0	90.0	80.0	120.0
42"		38-1/4"				120.0			120.0
48"		44-1/4"				120.0			120.0
54"		50-1/4"				100.0			100.0
60"		56-1/4"				100.0			100.0
24"	126"	20-1/4"	120-1/2"	90.0	80.0	120.0	90.0	80.0	120.0
30"		26-1/4"		90.0	80.0	120.0	90.0	80.0	120.0
36"		32-1/4"		90.0	80.0	120.0	90.0	80.0	120.0
42"		38-1/4"				120.0			120.0
48"		44-1/4"				100.0			100.0
54"		50-1/4"				100.0			100.0
24"	132"	20-1/4"	126-1/2"	90.0	80.0	120.0	90.0	80.0	120.0
30"		26-1/4"		90.0	80.0	120.0	90.0	80.0	120.0
36"		32-1/4"				120.0			120.0
42"		38-1/4"				120.0			120.0
48"		44-1/4"				100.0			100.0
54"		50-1/4"				100.0			100.0
24"	138"	20-1/4"	132-1/2"	90.0	80.0	120.0	90.0	80.0	120.0
30"		26-1/4"		90.0	80.0	120.0	90.0	80.0	120.0
36"		32-1/4"				120.0			120.0
42"		38-1/4"				100.0			100.0
48"		44-1/4"				100.0			100.0
24"	144"	20-1/4"	138-1/2"	90.0	80.0	120.0	90.0	80.0	120.0
30"		26-1/4"		90.0	80.0	120.0	90.0	80.0	120.0
36"		32-1/4"				120.0			120.0
42"		38-1/4"				100.0			100.0
48"		44-1/4"				100.0			100.0

Glass Types	
A	Lami: 1/4"A, .090" SG, 1/4"A
B	Lami: 1/4"HS, .090" PVB, 1/4"HS
C	Lami: 1/4"HS, .090" SG, 1/4"HS
D	Lami IG: 1/4"A, .090" SG, 1/4"A, AIRSPACE, 1/4"T CAP
E	Lami IG: 1/4"HS, .090" PVB, 1/4"HS, AIRSPACE, 1/4"T CAP
F	Lami IG: 1/4"HS, .090" SG, 1/4"HS, AIRSPACE, 1/4"T CAP

SEE SHEET 15 FOR FULL GLASS DESCRIPTIONS.

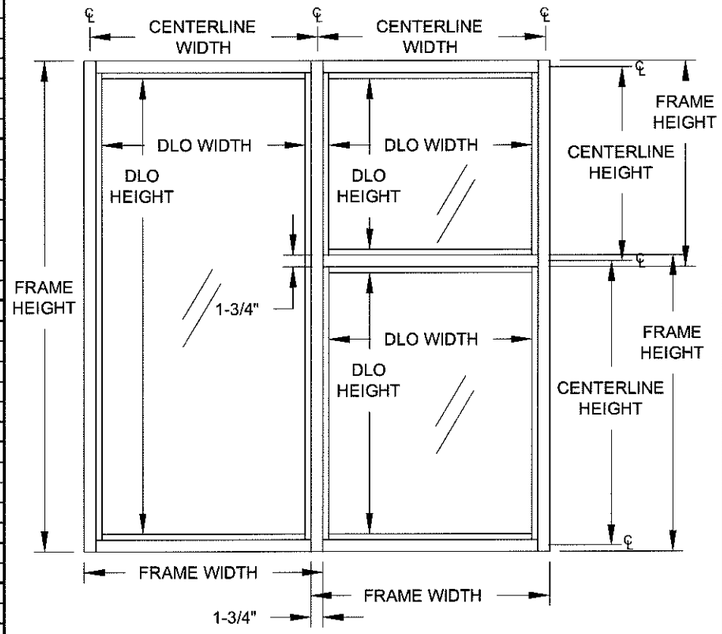

DLO (DAYLIGHT OPENING) FORMULAS:

FRAME WIDTH - 5-1/2" = DLO WIDTH
FRAME HEIGHT - 5-1/2" = DLO HEIGHT

CENTERLINE WIDTH - 3-3/4" = DLO WIDTH
CENTERLINE HEIGHT - 3-3/4" = DLO HEIGHT

CENTERLINE WIDTH - 2-1/4" = GLASS WIDTH
CENTERLINE HEIGHT - 2-1/4" = GLASS HEIGHT
FRAME WIDTH - 4" = GLASS WIDTH
FRAME HEIGHT - 4" = GLASS HEIGHT

NOTES:

1. IF COMBINED WITH ANOTHER ASSEMBLY WITH A SEPARATE APPROVAL, (STOREFRONT ENTRANCE DOOR, PTAC LOUVER OR WINDOW INSERT) THE LESSER DESIGN PRESSURE VALUE OF ANY ASSEMBLY OR THE STOREFRONT WINDOW SHALL BE THE DESIGN PRESSURE FOR THE ENTIRE SYSTEM.
2. DLO = DAYLIGHT OPENING
3. SEE SHEET 15 FOR DESCRIPTIONS OF GLASS TYPES.

PRODUCT REVISED
as complying with the Florida
Building Code
Acceptance No 16-0505.04
Expiration Date Jan 17, 2018
By Manuel Sores
Miami-Dade Product Control

Rev A

1070 TECHNOLOGY DRIVE
N. VENICE, FL 34275
P.O. BOX 1529
NOKOMIS, FL 34274
(941)-480-1600

CERT. OF AUTH. #29296

Series	Desc.	Title	Scale	Sheet	DWG No.	Drawn By	Date	Rev.
SS-3500	STOREFRONT WINDOW SYSTEM DETAILS - LM	TABLE 2	NTS	4 OF 16	MD-3500-2-LM	J ROSOWSKI	03/23/16	

ANTHONY LYNN MILLER
LICENSE
No. 58705
5/2/16
STATE OF
FLORIDA
PROFESSIONAL ENGINEER

A. LYNN MILLER, P.E.
P.E.# 58705

TABLE 3:

Mullion Anchor Cluster Design Pressure at Head/Sill, (+/- psf) — Shim Thickness: 1/4"

Average Centerline Width	Frame Height	Group "A" Anchor Quantity			Group "B" Anchor Quantity			Group "C" Anchor Quantity			Group "D" Anchor Quantity			Group "E" Anchor Quantity	
		4	6	8	4	6	8	4	6	8	4	6	8	4	6
24"	48"	120.0	120.0	120.0	120.0	120.0	120.0	120.0	120.0	120.0	120.0	120.0	120.0	120.0	120.0
30"		120.0	120.0	120.0	120.0	120.0	120.0	120.0	120.0	120.0	120.0	120.0	120.0	120.0	120.0
36"		120.0	120.0	120.0	120.0	120.0	120.0	120.0	120.0	120.0	120.0	120.0	120.0	120.0	120.0
42"		120.0	120.0	120.0	120.0	120.0	120.0	120.0	120.0	120.0	120.0	120.0	120.0	120.0	120.0
48"		120.0	120.0	120.0	120.0	120.0	120.0	120.0	120.0	120.0	120.0	120.0	120.0	120.0	120.0
54"		120.0	120.0	120.0	120.0	120.0	120.0	120.0	120.0	120.0	120.0	120.0	120.0	120.0	120.0
60"		120.0	120.0	120.0	120.0	120.0	120.0	120.0	120.0	120.0	120.0	120.0	120.0	120.0	120.0
70"		120.0	120.0	120.0	120.0	120.0	120.0	120.0	120.0	120.0	120.0	120.0	120.0	120.0	120.0
72"		120.0	120.0	120.0	120.0	120.0	120.0	120.0	120.0	120.0	120.0	120.0	120.0	120.0	120.0
84"		120.0	120.0	120.0	120.0	120.0	120.0	120.0	120.0	120.0	120.0	120.0	120.0	120.0	120.0
90"		120.0	120.0	120.0	120.0	120.0	120.0	120.0	120.0	120.0	120.0	120.0	120.0	120.0	120.0
92"		120.0	120.0	120.0	120.0	120.0	120.0	120.0	120.0	120.0	120.0	120.0	120.0	120.0	120.0
96"		120.0	120.0	120.0	120.0	120.0	120.0	120.0	120.0	120.0	120.0	120.0	120.0	120.0	120.0
102"		120.0	120.0	120.0	120.0	120.0	120.0	120.0	120.0	120.0	120.0	120.0	120.0	120.0	120.0
108"		120.0	120.0	120.0	120.0	120.0	120.0	120.0	120.0	120.0	120.0	120.0	120.0	120.0	120.0
120"		120.0	120.0	120.0	120.0	120.0	120.0	120.0	120.0	120.0	120.0	120.0	120.0	120.0	120.0
132"		120.0	120.0	120.0	120.0	120.0	120.0	120.0	120.0	120.0	120.0	120.0	120.0	120.0	120.0
144"		120.0	120.0	120.0	120.0	120.0	120.0	120.0	120.0	120.0	120.0	120.0	120.0	120.0	120.0
24"	60"	120.0	120.0	120.0	120.0	120.0	120.0	120.0	120.0	120.0	120.0	120.0	120.0	120.0	120.0
30"		120.0	120.0	120.0	120.0	120.0	120.0	120.0	120.0	120.0	120.0	120.0	120.0	120.0	120.0
36"		120.0	120.0	120.0	120.0	120.0	120.0	120.0	120.0	120.0	120.0	120.0	120.0	120.0	120.0
42"		120.0	120.0	120.0	120.0	120.0	120.0	120.0	120.0	120.0	120.0	120.0	120.0	120.0	120.0
48"		120.0	120.0	120.0	120.0	120.0	120.0	120.0	120.0	120.0	120.0	120.0	120.0	120.0	120.0
54"		120.0	120.0	120.0	120.0	120.0	120.0	120.0	120.0	120.0	120.0	120.0	120.0	120.0	120.0
60"		120.0	120.0	120.0	120.0	120.0	120.0	120.0	120.0	120.0	120.0	120.0	120.0	120.0	120.0
70"		120.0	120.0	120.0	120.0	120.0	120.0	120.0	120.0	120.0	120.0	120.0	120.0	120.0	120.0
72"		120.0	120.0	120.0	120.0	120.0	120.0	120.0	120.0	120.0	120.0	120.0	120.0	120.0	120.0
84"		120.0	120.0	120.0	120.0	120.0	120.0	120.0	120.0	120.0	120.0	120.0	120.0	120.0	120.0
90"		120.0	120.0	120.0	120.0	120.0	120.0	120.0	120.0	120.0	120.0	120.0	120.0	120.0	120.0
92"		120.0	120.0	120.0	120.0	120.0	120.0	120.0	120.0	120.0	120.0	120.0	120.0	120.0	120.0
96"		120.0	120.0	120.0	120.0	120.0	120.0	120.0	120.0	120.0	120.0	120.0	120.0	120.0	120.0
102"		120.0	120.0	120.0	120.0	120.0	120.0	120.0	120.0	120.0	120.0	120.0	120.0	120.0	120.0
108"		120.0	120.0	120.0	120.0	120.0	120.0	120.0	120.0	120.0	120.0	120.0	120.0	120.0	120.0
120"		120.0	120.0	120.0	120.0	120.0	120.0	120.0	120.0	120.0	120.0	120.0	120.0	120.0	120.0
24"	72"	120.0	120.0	120.0	120.0	120.0	120.0	120.0	120.0	120.0	120.0	120.0	120.0	120.0	120.0
30"		120.0	120.0	120.0	120.0	120.0	120.0	120.0	120.0	120.0	120.0	120.0	120.0	120.0	120.0
36"		120.0	120.0	120.0	120.0	120.0	120.0	120.0	120.0	120.0	120.0	120.0	120.0	120.0	120.0
42"		120.0	120.0	120.0	120.0	120.0	120.0	120.0	120.0	120.0	120.0	120.0	120.0	120.0	120.0
48"		120.0	120.0	120.0	120.0	120.0	120.0	120.0	120.0	120.0	120.0	120.0	120.0	120.0	120.0
54"		120.0	120.0	120.0	120.0	120.0	120.0	120.0	120.0	120.0	120.0	120.0	120.0	120.0	120.0
60"		120.0	120.0	120.0	120.0	120.0	120.0	120.0	120.0	120.0	120.0	120.0	120.0	120.0	120.0
70"		120.0	120.0	120.0	120.0	120.0	120.0	120.0	120.0	120.0	120.0	120.0	120.0	120.0	120.0
72"		120.0	120.0	120.0	120.0	120.0	120.0	120.0	120.0	120.0	120.0	120.0	120.0	120.0	120.0
84"		120.0	120.0	120.0	120.0	120.0	120.0	120.0	120.0	120.0	120.0	120.0	120.0	120.0	120.0
90"		120.0	120.0	120.0	120.0	120.0	120.0	120.0	120.0	120.0	120.0	120.0	120.0	120.0	120.0
92"		120.0	120.0	120.0	120.0	120.0	120.0	120.0	120.0	120.0	120.0	120.0	120.0	120.0	120.0
96"		120.0	120.0	120.0	120.0	120.0	120.0	120.0	120.0	120.0	120.0	120.0	120.0	120.0	120.0
24"	78"	120.0	120.0	120.0	120.0	120.0	120.0	120.0	120.0	120.0	120.0	120.0	120.0	120.0	120.0
30"		120.0	120.0	120.0	120.0	120.0	120.0	120.0	120.0	120.0	120.0	120.0	120.0	120.0	120.0
36"		120.0	120.0	120.0	120.0	120.0	120.0	120.0	120.0	120.0	120.0	120.0	120.0	120.0	120.0
42"		120.0	120.0	120.0	120.0	120.0	120.0	120.0	120.0	120.0	120.0	120.0	120.0	120.0	120.0
48"		120.0	120.0	120.0	120.0	120.0	120.0	120.0	120.0	120.0	120.0	120.0	120.0	120.0	120.0
54"		120.0	120.0	120.0	120.0	120.0	120.0	120.0	120.0	120.0	120.0	120.0	120.0	120.0	120.0
60"		118.1	120.0	120.0	120.0	120.0	120.0	120.0	120.0	120.0	120.0	120.0	120.0	120.0	120.0
70"		113.0	120.0	120.0	120.0	120.0	120.0	120.0	120.0	120.0	120.0	120.0	120.0	120.0	120.0
72"		112.5	120.0	120.0	120.0	120.0	120.0	120.0	120.0	120.0	120.0	120.0	120.0	120.0	120.0
84"		111.8	120.0	120.0	120.0	120.0	120.0	120.0	120.0	120.0	120.0	120.0	120.0	120.0	120.0
90"		111.8	120.0	120.0	120.0	120.0	120.0	120.0	120.0	120.0	120.0	120.0	120.0	120.0	120.0
92"		111.8	120.0	120.0	120.0	120.0	120.0	120.0	120.0	120.0	120.0	120.0	120.0	120.0	120.0
24"	84"	120.0	120.0	120.0	120.0	120.0	120.0	120.0	120.0	120.0	120.0	120.0	120.0	120.0	120.0
30"		120.0	120.0	120.0	120.0	120.0	120.0	120.0	120.0	120.0	120.0	120.0	120.0	120.0	120.0
36"		120.0	120.0	120.0	120.0	120.0	120.0	120.0	120.0	120.0	120.0	120.0	120.0	120.0	120.0
42"		120.0	120.0	120.0	120.0	120.0	120.0	120.0	120.0	120.0	120.0	120.0	120.0	120.0	120.0
48"		118.1	120.0	120.0	120.0	120.0	120.0	120.0	120.0	120.0	120.0	120.0	120.0	120.0	120.0
54"		110.5	120.0	120.0	120.0	120.0	120.0	120.0	120.0	120.0	120.0	120.0	120.0	120.0	120.0
60"		105.0	120.0	120.0	120.0	120.0	120.0	120.0	120.0	120.0	120.0	120.0	120.0	120.0	120.0
70"		99.2	120.0	120.0	120.0	120.0	120.0	120.0	120.0	120.0	120.0	120.0	120.0	120.0	120.0
72"		98.4	120.0	120.0	120.0	120.0	120.0	120.0	120.0	120.0	120.0	120.0	120.0	120.0	120.0
84"		96.4	120.0	120.0	120.0	120.0	120.0	120.0	120.0	120.0	120.0	120.0	120.0	120.0	120.0

Mullion Anchor Cluster Design Pressure at Head/Sill, (+/- psf) — Shim Thickness: 1/4"

Average Centerline Width	Frame Height	Group "A" Anchor Quantity			Group "B" Anchor Quantity			Group "C" Anchor Quantity			Group "D" Anchor Quantity			Group "E" Anchor Quantity	
		4	6	8	4	6	8	4	6	8	4	6	8	4	6
24"	90"	120.0	120.0	120.0	120.0	120.0	120.0	120.0	120.0	120.0	120.0	120.0	120.0	120.0	120.0
30"		120.0	120.0	120.0	120.0	120.0	120.0	120.0	120.0	120.0	120.0	120.0	120.0	120.0	120.0
36"		120.0	120.0	120.0	120.0	120.0	120.0	120.0	120.0	120.0	120.0	120.0	120.0	120.0	120.0
42"		117.4	120.0	120.0	120.0	120.0	120.0	120.0	120.0	120.0	120.0	120.0	120.0	120.0	120.0
48"		107.4	120.0	120.0	120.0	120.0	120.0	120.0	120.0	120.0	120.0	120.0	120.0	120.0	120.0
54"		100.0	120.0	120.0	120.0	120.0	120.0	120.0	120.0	120.0	120.0	120.0	120.0	120.0	120.0
60"		94.5	120.0	120.0	120.0	120.0	120.0	120.0	120.0	120.0	120.0	120.0	120.0	120.0	120.0
70"		88.4	120.0	120.0	120.0	120.0	120.0	118.2	120.0	120.0	120.0	120.0	120.0	120.0	120.0
72"		87.5	120.0	120.0	120.0	120.0	120.0	117.0	120.0	120.0	120.0	120.0	120.0	120.0	120.0
24"	97-3/4"	120.0	120.0	120.0	120.0	120.0	120.0	120.0	120.0	120.0	120.0	120.0	120.0	120.0	120.0
30"		120.0	120.0	120.0	120.0	120.0	120.0	120.0	120.0	120.0	120.0	120.0	120.0	120.0	120.0
36"		118.5	120.0	120.0	120.0	120.0	120.0	120.0	120.0	120.0	120.0	120.0	120.0	120.0	120.0
42"		105.5	120.0	120.0	120.0	120.0	120.0	120.0	120.0	120.0	120.0	120.0	120.0	120.0	120.0
48"		96.1	120.0	120.0	120.0	120.0	120.0	120.0	120.0	120.0	120.0	120.0	120.0	120.0	120.0
54"		89.0	120.0	120.0	120.0	120.0	120.0	119.1	120.0	120.0	120.0	120.0	120.0	120.0	120.0
60"		83.7	120.0	120.0	115.9	120.0	120.0	111.9	120.0	120.0	120.0	120.0	120.0	120.0	120.0
70"		77.4	116.2	120.0	107.2	120.0	120.0	103.6	120.0	120.0	120.0	120.0	120.0	120.0	120.0
72"		76.5	114.8	120.0	105.9	120.0	120.0	102.3	120.0	120.0	120.0	120.0	120.0	120.0	120.0
24"	102"	120.0	120.0	120.0	120.0	120.0	120.0	120.0	120.0	120.0	120.0	120.0	120.0	120.0	120.0
30"		120.0	120.0	120.0	120.0	120.0	120.0	120.0	120.0	120.0	120.0	120.0	120.0	120.0	120.0
36"		112.5	120.0	120.0	120.0	120.0	120.0	120.0	120.0	120.0	120.0	120.0	120.0	120.0	120.0
42"		100.0	120.0	120.0	120.0	120.0	120.0	120.0	120.0	120.0	120.0	120.0	120.0	120.0	120.0
48"		90.9	120.0	120.0	120.0	120.0	120.0	120.0	120.0	120.0	120.0	120.0	120.0	120.0	120.0
54"		84.0	120.0	120.0	116.3	120.0	120.0	112.4	120.0	120.0	120.0	120.0	120.0	120.0	120.0
60"		78.7	118.1	120.0	109.0	120.0	120.0	105.3	120.0	120.0	120.0	120.0	120.0	120.0	120.0
70"		72.5	108.8	120.0	100.4	120.0	120.0	97.0	120.0	120.0	114.7	120.0	120.0	120.0	120.0
24"	108"	120.0	120.0	120.0	120.0	120.0	120.0	120.0	120.0	120.0	120.0	120.0	120.0	120.0	120.0
30"		120.0	120.0	120.0	120.0	120.0	120.0	120.0	120.0	120.0	120.0	120.0	120.0	120.0	120.0
36"		105.0	120.0	120.0	120.0	120.0	120.0	120.0	120.0	120.0	120.0	120.0	120.0	120.0	120.0
42"		93.1	120.0	120.0	120.0	120.0	120.0	120.0	120.0	120.0	120.0	120.0	120.0	120.0	120.0
48"		84.4	120.0	120.0	116.8	120.0	120.0	112.9	120.0	120.0	120.0	120.0	120.0	120.0	120.0
54"		77.8	116.7	120.0	107.7	120.0	120.0	104.0	120.0	120.0	120.0	120.0	120.0	120.0	120.0
60"		72.7	109.0	120.0	100.7	120.0	120.0	97.2	120.0	120.0	115.0	120.0	120.0	120.0	120.0
24"	114"	120.0	120.0	120.0	120.0	120.0	120.0	120.0	120.0	120.0	120.0	120.0	120.0	120.0	120.0
30"		114.5	120.0	120.0	120.0	120.0	120.0	120.0	120.0	120.0	120.0	120.0	120.0	120.0	120.0
36"		98.4	120.0	120.0	120.0	120.0	120.0	120.0	120.0	120.0	120.0	120.0	120.0	120.0	120.0
42"		87.1	120.0	120.0	120.0	120.0	120.0	116.5	120.0	120.0	120.0	120.0	120.0	120.0	120.0
48"		78.7	118.1	120.0	109.0	120.0	120.0	105.3	120.0	120.0	120.0	120.0	120.0	120.0	120.0
54"		72.4	108.6	120.0	100.3	120.0	120.0	96.9	120.0	120.0	114.5	120.0	120.0	120.0	120.0
60"		67.5	101.2	120.0	93.5	120.0	120.0	90.3	120.0	120.0	106.7	120.0	120.0	112.7	120.0
24"	120"	120.0	120.0	120.0	120.0	120.0	120.0	120.0	120.0	120.0	120.0	120.0	120.0	120.0	120.0
30"		108.0	120.0	120.0	120.0	120.0	120.0	120.0	120.0	120.0	120.0	120.0	120.0	120.0	120.0
36"		92.6	120.0	120.0	120.0	120.0	120.0	120.0	120.0	120.0	120.0	120.0	120.0	120.0	120.0
42"		81.8	120.0	120.0	113.3	120.0	120.0	109.4	120.0	120.0	120.0	120.0	120.0	120.0	120.0
48"		73.8	110.7	120.0	102.2	120.0	120.0	98.8	120.0	120.0	116.8	120.0	120.0	120.0	120.0
54"		67.7	101.6	120.0	93.8	120.0	120.0	90.6	120.0	120.0	107.1	120.0	120.0	113.1	120.0
60"		63.0	94.5	120.0	87.2	120.0	120.0	84.3	120.0	120.0	99.6	120.0	120.0	105.2	120.0
24"	126"	120.0	120.0	120.0	120.0	120.0	120.0	120.0	120.0	120.0	120.0	120.0	120.0	120.0	120.0
30"		102.2	120.0	120.0	120.0	120.0	120.0	120.0	120.0	120.0	120.0	120.0	120.0	120.0	120.0
36"		87.5	120.0	120.0	120.0	120.0	120.0	117.0	120.0	120.0	120.0	120.0	120.0	120.0	120.0
42"		77.1	115.7	120.0	106.8	120.0	120.0	103.2	120.0	120.0	120.0	120.0	120.0	120.0	120.0
48"		69.5	104.2	120.0	96.2	120.0	120.0	92.9	120.0	120.0	109.9	120.0	120.0	116.0	120.0
54"		63.6	95.5	120.0	88.1	120.0	120.0	85.1	120.0	120.0	100.6	120.0	120.0	106.2	120.0
24"	132"	118.1	120.0	120.0	120.0	120.0	120.0	120.0	120.0	120.0	120.0	120.0	120.0	120.0	120.0
30"		96.9	120.0	120.0	120.0	120.0	120.0	120.0	120.0	120.0	120.0	120.0	120.0	120.0	120.0
36"		82.9	120.0	120.0	114.8	120.0	120.0	110.9	120.0	120.0	120.0	120.0	120.0	120.0	120.0
42"		73.0	109.5	120.0	101.0	120.0	120.0	97.6	120.0	120.0	115.4	120.0	120.0	120.0	120.0
48"		65.6	98.4	120.0	90.9	120.0	120.0	87.8	120.0	120.0	103.8	120.0	120.0	109.6	120.0
54"		60.0	90.0	120.0	83.1	120.0	120.0	80.3	120.0	120.0	94.9	120.0	120.0	100.2	120.0
24"	138"	112.5	120.0	120.0	120.0	120.0	120.0	120.0	120.0	120.0	120.0	120.0	120.0	120.0	120.0
30"		92.2	120.0	120.0	120.0	120.0	120.0	120.0	120.0	120.0	120.0	120.0	120.0	120.0	120.0
36"		78.7	118.1	120.0	109.0	120.0	120.0	105.3	120.0	120.0	120.0	120.0	120.0	120.0	120.0
42"		69.2	103.8	120.0	95.9	120.0	120.0	92.6	120.0	120.0	109.5	120.0	120.0	115.6	120.0
48"		62.2	93.3	120.0	86.1	120.0	120.0	83.2	120.0	120.0	98.3	120.0	120.0	103.8	120.0
24"	144"	107.4	120.0	120.0	120.0	120.0	120.0	120.0	120.0	120.0	120.0	120.0	120.0	120.0	120.0
30"		87.9	120.0	120.0	120.0	120.0	120.0	117.6	120.0	120.0	120.0	120.0	120.0	120.0	120.0
36"		75.0	112.5	120.0	103.8	120.0	120.0	100.3	120.0	120.0	118.6	120.0	120.0	120.0	120.0
42"		65.9	98.8	120.0	91.2	120.0	120.0	88.1	120.0	120.0	104.1	120.0	120.0	109.9	120.0
48"		59.1	88.6	118.1	81.8	120.0	120.0	79.0	118.5	120.0	93.4	120.0	120.0	98.6	120.0

$$\text{AVERAGE CENTERLINE WIDTH} = \frac{\text{CENTERLINE WIDTH 1} + \text{CENTERLINE WIDTH 2}}{2}$$

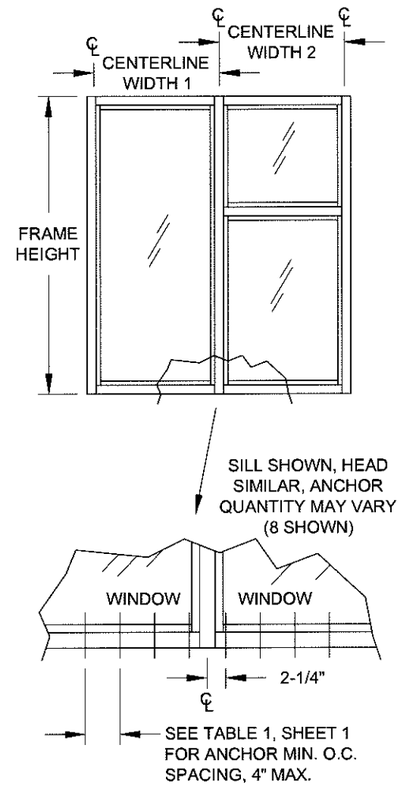

HEAD & SILL ANCHOR PATTERN

NOTES:

1. IF COMBINED WITH ANOTHER ASSEMBLY WITH A SEPARATE APPROVAL, (STOREFRONT ENTRANCE DOOR, PTAC LOUVER OR WINDOW INSERT) THE LESSER DESIGN PRESSURE VALUE OF ANY ASSEMBLY OR THE STOREFRONT WINDOW SHALL BE THE DESIGN PRESSURE FOR THE ENTIRE SYSTEM.

PRODUCT REVISED
as complying with the Florida Building Code
Acceptance No 16-0505.04
Expiration Date Jan. 11, 2018
By Manuel Perez
Miami-Dade Product Control

Rev A

1070 TECHNOLOGY DRIVE
N. VENICE, FL 34275
P.O. BOX 1529
NOKOMIS, FL 34274
(941)-480-1600

CERT. OF AUTH. #29296

Series	Desc.	Scale	Sheet	DWG No.	Drawn By	Date	Rev.
SS-3500	STOREFRONT WINDOW SYSTEM DETAILS - LM	NTS	5 OF 16	MD-3500-2-LM	J ROSOWSKI	03/23/16	

Title: TABLE 3

ANTHONY LYNN MILLER LICENSE No. 58705 STATE OF FLORIDA PROFESSIONAL ENGINEER
5/2/16

A. LYNN MILLER, P.E.
P.E.# 58705

TABLE 4:

Mullion Anchor Cluster Design Pressure at Head/Sill, (+/- psf) — Shim Thickness: 1/2"

Average Centerline Width	Frame Height	Group "A" Anchor Quantity			Group "B" Anchor Quantity			Group "C" Anchor Quantity			Group "D" Anchor Quantity			Group "E" Anchor Quantity	
		4	6	8	4	6	8	4	6	8	4	6	8	4	6
24"	48"	120.0	120.0	120.0	120.0	120.0	120.0	120.0	120.0	120.0	120.0	120.0	120.0	120.0	120.0
30"		120.0	120.0	120.0	120.0	120.0	120.0	120.0	120.0	120.0	120.0	120.0	120.0	120.0	120.0
36"		120.0	120.0	120.0	120.0	120.0	120.0	120.0	120.0	120.0	120.0	120.0	120.0	120.0	120.0
42"		120.0	120.0	120.0	120.0	120.0	120.0	120.0	120.0	120.0	120.0	120.0	120.0	120.0	120.0
48"		120.0	120.0	120.0	120.0	120.0	120.0	120.0	120.0	120.0	120.0	120.0	120.0	120.0	120.0
54"		120.0	120.0	120.0	120.0	120.0	120.0	120.0	120.0	120.0	120.0	120.0	120.0	120.0	120.0
60"		120.0	120.0	120.0	120.0	120.0	120.0	120.0	120.0	120.0	120.0	120.0	120.0	120.0	120.0
70"		120.0	120.0	120.0	120.0	120.0	120.0	120.0	120.0	120.0	120.0	120.0	120.0	120.0	120.0
72"		120.0	120.0	120.0	120.0	120.0	120.0	120.0	120.0	120.0	120.0	120.0	120.0	120.0	120.0
84"		120.0	120.0	120.0	120.0	120.0	120.0	120.0	120.0	120.0	120.0	120.0	120.0	120.0	120.0
90"		120.0	120.0	120.0	120.0	120.0	120.0	120.0	120.0	120.0	120.0	120.0	120.0	120.0	120.0
92"		120.0	120.0	120.0	120.0	120.0	120.0	120.0	120.0	120.0	120.0	120.0	120.0	120.0	120.0
96"		120.0	120.0	120.0	120.0	120.0	120.0	120.0	120.0	120.0	120.0	120.0	120.0	120.0	120.0
102"		120.0	120.0	120.0	120.0	120.0	120.0	120.0	120.0	120.0	120.0	120.0	120.0	120.0	120.0
108"		120.0	120.0	120.0	120.0	120.0	120.0	120.0	120.0	120.0	120.0	120.0	120.0	120.0	120.0
120"		120.0	120.0	120.0	120.0	120.0	120.0	120.0	120.0	120.0	120.0	120.0	120.0	120.0	120.0
132"		120.0	120.0	120.0	120.0	120.0	120.0	120.0	120.0	120.0	120.0	120.0	120.0	120.0	120.0
144"		120.0	120.0	120.0	120.0	120.0	120.0	120.0	120.0	120.0	120.0	120.0	120.0	120.0	120.0
24"	60"	120.0	120.0	120.0	120.0	120.0	120.0	120.0	120.0	120.0	120.0	120.0	120.0	120.0	120.0
30"		120.0	120.0	120.0	120.0	120.0	120.0	120.0	120.0	120.0	120.0	120.0	120.0	120.0	120.0
36"		120.0	120.0	120.0	120.0	120.0	120.0	120.0	120.0	120.0	120.0	120.0	120.0	120.0	120.0
42"		120.0	120.0	120.0	120.0	120.0	120.0	120.0	120.0	120.0	120.0	120.0	120.0	120.0	120.0
48"		120.0	120.0	120.0	120.0	120.0	120.0	120.0	120.0	120.0	120.0	120.0	120.0	120.0	120.0
54"		120.0	120.0	120.0	120.0	120.0	120.0	120.0	120.0	120.0	120.0	120.0	120.0	120.0	120.0
60"		120.0	120.0	120.0	120.0	120.0	120.0	120.0	120.0	120.0	120.0	120.0	120.0	120.0	120.0
70"		120.0	120.0	120.0	120.0	120.0	120.0	120.0	120.0	120.0	120.0	120.0	120.0	120.0	120.0
72"		120.0	120.0	120.0	120.0	120.0	120.0	120.0	120.0	120.0	120.0	120.0	120.0	120.0	120.0
84"		120.0	120.0	120.0	120.0	120.0	120.0	120.0	120.0	120.0	120.0	120.0	120.0	120.0	120.0
90"		120.0	120.0	120.0	120.0	120.0	120.0	120.0	120.0	120.0	120.0	120.0	120.0	120.0	120.0
92"		120.0	120.0	120.0	120.0	120.0	120.0	120.0	120.0	120.0	120.0	120.0	120.0	120.0	120.0
96"		120.0	120.0	120.0	120.0	120.0	120.0	120.0	120.0	120.0	120.0	120.0	120.0	120.0	120.0
102"		120.0	120.0	120.0	120.0	120.0	120.0	120.0	120.0	120.0	120.0	120.0	120.0	120.0	120.0
108"		120.0	120.0	120.0	120.0	120.0	120.0	120.0	120.0	120.0	120.0	120.0	120.0	120.0	120.0
120"		120.0	120.0	120.0	120.0	120.0	120.0	120.0	120.0	120.0	120.0	120.0	120.0	120.0	120.0
24"	72"	120.0	120.0	120.0	120.0	120.0	120.0	120.0	120.0	120.0	120.0	120.0	120.0	120.0	120.0
30"		120.0	120.0	120.0	120.0	120.0	120.0	120.0	120.0	120.0	120.0	120.0	120.0	120.0	120.0
36"		112.9	120.0	120.0	112.9	120.0	120.0	120.0	120.0	120.0	120.0	120.0	120.0	120.0	120.0
42"		102.5	120.0	120.0	102.5	120.0	120.0	120.0	120.0	120.0	120.0	120.0	120.0	120.0	120.0
48"		95.3	120.0	120.0	95.3	120.0	120.0	120.0	120.0	120.0	120.0	120.0	120.0	120.0	120.0
54"		90.4	120.0	120.0	90.4	120.0	120.0	120.0	120.0	120.0	120.0	120.0	120.0	120.0	120.0
60"		87.1	120.0	120.0	87.1	120.0	120.0	119.2	120.0	120.0	120.0	120.0	120.0	120.0	120.0
70"		84.8	120.0	120.0	84.8	120.0	120.0	115.9	120.0	120.0	120.0	120.0	120.0	120.0	120.0
72"		84.7	120.0	120.0	84.7	120.0	120.0	115.9	120.0	120.0	120.0	120.0	120.0	120.0	120.0
84"		84.7	120.0	120.0	84.7	120.0	120.0	115.9	120.0	120.0	120.0	120.0	120.0	120.0	120.0
90"		84.7	120.0	120.0	84.7	120.0	120.0	115.9	120.0	120.0	120.0	120.0	120.0	120.0	120.0
92"		84.7	120.0	120.0	84.7	120.0	120.0	115.9	120.0	120.0	120.0	120.0	120.0	120.0	120.0
96"		84.7	120.0	120.0	84.7	120.0	120.0	115.9	120.0	120.0	120.0	120.0	120.0	120.0	120.0
24"	78"	120.0	120.0	120.0	120.0	120.0	120.0	120.0	120.0	120.0	120.0	120.0	120.0	120.0	120.0
30"		116.2	120.0	120.0	116.2	120.0	120.0	120.0	120.0	120.0	120.0	120.0	120.0	120.0	120.0
36"		101.7	120.0	120.0	101.7	120.0	120.0	120.0	120.0	120.0	120.0	120.0	120.0	120.0	120.0
42"		91.7	120.0	120.0	91.7	120.0	120.0	120.0	120.0	120.0	120.0	120.0	120.0	120.0	120.0
48"		84.7	120.0	120.0	84.7	120.0	120.0	115.9	120.0	120.0	120.0	120.0	120.0	120.0	120.0
54"		79.7	119.6	120.0	79.7	119.6	120.0	109.0	120.0	120.0	120.0	120.0	120.0	120.0	120.0
60"		76.2	114.4	120.0	76.2	114.4	120.0	104.3	120.0	120.0	120.0	120.0	120.0	120.0	120.0
70"		72.9	109.4	120.0	72.9	109.4	120.0	99.8	120.0	120.0	120.0	120.0	120.0	120.0	120.0
72"		72.6	108.9	120.0	72.6	108.9	120.0	99.3	120.0	120.0	120.0	120.0	120.0	120.0	120.0
84"		72.2	108.3	120.0	72.2	108.3	120.0	98.7	120.0	120.0	120.0	120.0	120.0	120.0	120.0
90"		72.2	108.3	120.0	72.2	108.3	120.0	98.7	120.0	120.0	120.0	120.0	120.0	120.0	120.0
92"		72.2	108.3	120.0	72.2	108.3	120.0	98.7	120.0	120.0	120.0	120.0	120.0	120.0	120.0
24"	84"	120.0	120.0	120.0	120.0	120.0	120.0	120.0	120.0	120.0	120.0	120.0	120.0	120.0	120.0
30"		106.1	120.0	120.0	106.1	120.0	120.0	120.0	120.0	120.0	120.0	120.0	120.0	120.0	120.0
36"		92.4	120.0	120.0	92.4	120.0	120.0	120.0	120.0	120.0	120.0	120.0	120.0	120.0	120.0
42"		83.0	120.0	120.0	83.0	120.0	120.0	113.5	120.0	120.0	120.0	120.0	120.0	120.0	120.0
48"		76.2	114.4	120.0	76.2	114.4	120.0	104.3	120.0	120.0	120.0	120.0	120.0	120.0	120.0
54"		71.3	107.0	120.0	71.3	107.0	120.0	97.6	120.0	120.0	120.0	120.0	120.0	120.0	120.0
60"		67.8	101.7	120.0	67.8	101.7	120.0	92.7	120.0	120.0	118.1	120.0	120.0	120.0	120.0
70"		64.0	96.0	120.0	64.0	96.0	120.0	87.5	120.0	120.0	111.6	120.0	120.0	120.0	120.0
72"		63.5	95.3	120.0	63.5	95.3	120.0	86.9	120.0	120.0	110.7	120.0	120.0	120.0	120.0
84"		62.2	93.4	120.0	62.2	93.4	120.0	85.1	120.0	120.0	108.5	120.0	120.0	120.0	120.0

Mullion Anchor Cluster Design Pressure at Head/Sill, (+/- psf) — Shim Thickness: 1/2"

Average Centerline Width	Frame Height	Group "A" Anchor Quantity			Group "B" Anchor Quantity			Group "C" Anchor Quantity			Group "D" Anchor Quantity			Group "E" Anchor Quantity	
		4	6	8	4	6	8	4	6	8	4	6	8	4	6
24"	90"	117.3	120.0	120.0	117.3	120.0	120.0	120.0	120.0	120.0	120.0	120.0	120.0	120.0	120.0
30"		97.6	120.0	120.0	97.6	120.0	120.0	120.0	120.0	120.0	120.0	120.0	120.0	120.0	120.0
36"		84.7	120.0	120.0	84.7	120.0	120.0	115.9	120.0	120.0	120.0	120.0	120.0	120.0	120.0
42"		75.8	113.6	120.0	75.8	113.6	120.0	103.6	120.0	120.0	120.0	120.0	120.0	120.0	120.0
48"		69.3	104.0	120.0	69.3	104.0	120.0	94.8	120.0	120.0	120.0	120.0	120.0	120.0	120.0
54"		64.5	96.8	120.0	64.5	96.8	120.0	88.3	120.0	120.0	112.5	120.0	120.0	120.0	120.0
60"		61.0	91.5	120.0	61.0	91.5	120.0	83.4	120.0	120.0	106.3	120.0	120.0	120.0	120.0
70"		57.0	85.5	114.1	57.0	85.5	114.1	78.0	117.0	120.0	99.4	120.0	120.0	120.0	120.0
72"		56.5	84.7	112.9	56.5	84.7	112.9	77.2	115.9	120.0	98.4	120.0	120.0	120.0	120.0
24"	97-3/4"	106.7	120.0	120.0	106.7	120.0	120.0	120.0	120.0	120.0	120.0	120.0	120.0	120.0	120.0
30"		88.4	120.0	120.0	88.4	120.0	120.0	120.0	120.0	120.0	120.0	120.0	120.0	120.0	120.0
36"		76.5	114.7	120.0	76.5	114.7	120.0	104.6	120.0	120.0	120.0	120.0	120.0	120.0	120.0
42"		68.1	102.2	120.0	68.1	102.2	120.0	93.2	120.0	120.0	118.7	120.0	120.0	120.0	120.0
48"		62.0	93.0	120.0	62.0	93.0	120.0	84.8	120.0	120.0	108.1	120.0	120.0	120.0	120.0
54"		57.5	86.2	114.9	57.5	86.2	114.9	78.6	117.9	120.0	100.2	120.0	120.0	120.0	120.0
60"		54.0	81.0	108.0	54.0	81.0	108.0	73.9	110.8	120.0	94.1	120.0	120.0	120.0	120.0
70"		50.0	75.0	100.0	50.0	75.0	100.0	68.4	102.5	120.0	87.1	120.0	120.0	120.0	120.0
72"		49.4	74.1	98.8	49.4	74.1	98.8	67.5	101.3	120.0	86.1	120.0	120.0	120.0	120.0
24"	102"	101.7	120.0	120.0	101.7	120.0	120.0	120.0	120.0	120.0	120.0	120.0	120.0	120.0	120.0
30"		84.1	120.0	120.0	84.1	120.0	120.0	115.1	120.0	120.0	120.0	120.0	120.0	120.0	120.0
36"		72.6	108.9	120.0	72.6	108.9	120.0	99.3	120.0	120.0	120.0	120.0	120.0	120.0	120.0
42"		64.5	96.8	120.0	64.5	96.8	120.0	88.3	120.0	120.0	112.5	120.0	120.0	120.0	120.0
48"		58.6	88.0	117.3	58.6	88.0	117.3	80.2	120.0	120.0	102.2	120.0	120.0	120.0	120.0
54"		54.2	81.3	108.4	54.2	81.3	108.4	74.1	111.2	120.0	94.5	120.0	120.0	120.0	120.0
60"		50.8	76.2	101.7	50.8	76.2	101.7	69.5	104.3	120.0	88.6	120.0	120.0	120.0	120.0
70"		46.8	70.2	93.6	46.8	70.2	93.6	64.0	96.0	120.0	81.6	120.0	120.0	120.0	120.0
24"	108"	95.3	120.0	120.0	95.3	120.0	120.0	120.0	120.0	120.0	120.0	120.0	120.0	120.0	120.0
30"		78.7	118.0	120.0	78.7	118.0	120.0	107.6	120.0	120.0	120.0	120.0	120.0	120.0	120.0
36"		67.8	101.7	120.0	67.8	101.7	120.0	92.7	120.0	120.0	118.1	120.0	120.0	120.0	120.0
42"		60.1	90.1	120.0	60.1	90.1	120.0	82.2	120.0	120.0	104.7	120.0	120.0	120.0	120.0
48"		54.5	81.7	108.9	54.5	81.7	108.9	74.5	111.7	120.0	94.9	120.0	120.0	120.0	120.0
54"		50.2	75.3	100.4	50.2	75.3	100.4	68.7	103.0	120.0	87.5	120.0	120.0	120.0	120.0
60"		46.9	70.4	93.8	46.9	70.4	93.8	64.2	96.2	120.0	81.8	120.0	120.0	120.0	120.0
24"	114"	89.7	120.0	120.0	89.7	120.0	120.0	120.0	120.0	120.0	120.0	120.0	120.0	120.0	120.0
30"		73.9	110.9	120.0	73.9	110.9	120.0	101.1	120.0	120.0	120.0	120.0	120.0	120.0	120.0
36"		63.5	95.3	120.0	63.5	95.3	120.0	86.9	120.0	120.0	110.7	120.0	120.0	120.0	120.0
42"		56.2	84.3	112.4	56.2	84.3	112.4	76.9	115.3	120.0	98.0	120.0	120.0	120.0	120.0
48"		50.8	76.2	101.7	50.8	76.2	101.7	69.5	104.3	120.0	88.6	120.0	120.0	120.0	120.0
54"		46.7	70.1	93.5	46.7	70.1	93.5	63.9	95.9	120.0	81.5	120.0	120.0	120.0	120.0
60"		43.6	65.3	87.1	43.6	65.3	87.1	59.6	89.4	119.2	75.9	113.9	120.0	112.7	120.0
24"	120"	84.7	120.0	120.0	84.7	120.0	120.0	115.9	120.0	120.0	120.0	120.0	120.0	120.0	120.0
30"		69.7	104.6	120.0	69.7	104.6	120.0	95.3	120.0	120.0	120.0	120.0	120.0	120.0	120.0
36"		59.8	89.7	119.6	59.8	89.7	119.6	81.8	120.0	120.0	104.2	120.0	120.0	120.0	120.0
42"		52.8	79.2	105.6	52.8	79.2	105.6	72.2	108.3	120.0	92.0	120.0	120.0	120.0	120.0
48"		47.7	71.5	95.3	47.7	71.5	95.3	65.2	97.8	120.0	83.1	120.0	120.0	120.0	120.0
54"		43.7	65.6	87.4	43.7	65.6	87.4	59.8	89.7	119.6	76.2	114.3	120.0	113.1	120.0
60"		40.7	61.0	81.3	40.7	61.0	81.3	55.6	83.4	111.2	70.9	106.3	120.0	105.2	120.0
24"	126"	80.3	120.0	120.0	80.3	120.0	120.0	109.8	120.0	120.0	120.0	120.0	120.0	120.0	120.0
30"		65.9	98.9	120.0	65.9	98.9	120.0	90.2	120.0	120.0	114.9	120.0	120.0	120.0	120.0
36"		56.5	84.7	112.9	56.5	84.7	112.9	77.2	115.9	120.0	98.4	120.0	120.0	120.0	120.0
42"		49.8	74.7	99.6	49.8	74.7	99.6	68.1	102.1	120.0	86.8	120.0	120.0	120.0	120.0
48"		44.8	67.3	89.7	44.8	67.3	89.7	61.3	92.0	120.0	78.2	117.2	120.0	116.0	120.0
54"		41.1	61.6	82.1	41.1	61.6	82.1	56.2	84.3	112.3	71.6	107.4	120.0	106.2	120.0
24"	132"	76.2	114.4	120.0	76.2	114.4	120.0	104.3	120.0	120.0	120.0	120.0	120.0	120.0	120.0
30"		62.6	93.8	120.0	62.6	93.8	120.0	85.6	120.0	120.0	109.0	120.0	120.0	120.0	120.0
36"		53.5	80.3	107.0	53.5	80.3	107.0	73.2	109.8	120.0	93.2	120.0	120.0	120.0	120.0
42"		47.1	70.6	94.2	47.1	70.6	94.2	64.4	96.6	120.0	82.1	120.0	120.0	120.0	120.0
48"		42.4	63.5	84.7	42.4	63.5	84.7	57.9	86.9	115.9	73.8	110.7	120.0	109.6	120.0
54"		38.7	58.1	77.5	38.7	58.1	77.5	53.0	79.4	105.9	67.5	101.2	120.0	100.2	120.0
24"	138"	72.6	108.9	120.0	72.6	108.9	120.0	99.3	120.0	120.0	120.0	120.0	120.0	120.0	120.0
30"		59.5	89.3	119.0	59.5	89.3	119.0	81.4	120.0	120.0	103.7	120.0	120.0	120.0	120.0
36"		50.8	76.2	101.7	50.8	76.2	101.7	69.5	104.3	120.0	88.6	120.0	120.0	120.0	120.0
42"		44.7	67.0	89.4	44.7	67.0	89.4	61.1	91.7	120.0	77.9	116.8	120.0	115.6	120.0
48"		40.1	60.2	80.3	40.1	60.2	80.3	54.9	82.3	109.8	69.9	104.9	120.0	103.8	120.0
24"	144"	69.3	104.0	120.0	69.3	104.0	120.0	94.8	120.0	120.0	120.0	120.0	120.0	120.0	120.0
30"		56.7	85.1	113.5	56.7	85.1	113.5	77.6	116.4	120.0	98.9	120.0	120.0	120.0	120.0
36"		48.4	72.6	96.8	48.4	72.6	96.8	66.2	99.3	120.0	84.4	120.0	120.0	120.0	120.0
42"		42.5	63.8	85.0	42.5	63.8	85.0	58.1	87.2	116.3	74.1	111.1	120.0	109.9	120.0
48"		38.1	57.2	76.2	38.1	57.2	76.2	52.1	78.2	104.3	66.4	99.7	120.0	98.6	120.0

$$\text{AVERAGE CENTERLINE WIDTH} = \frac{\text{CENTERLINE WIDTH 1} + \text{CENTERLINE WIDTH 2}}{2}$$

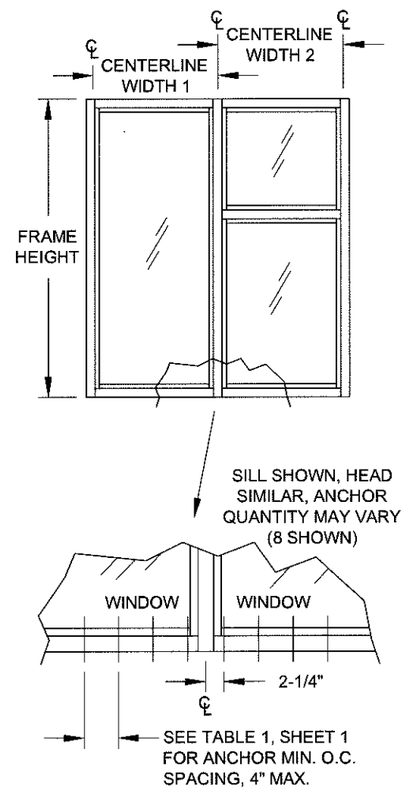

HEAD & SILL ANCHOR PATTERN

NOTES:

1. IF COMBINED WITH ANOTHER ASSEMBLY WITH A SEPARATE APPROVAL, (STOREFRONT ENTRANCE DOOR, PTAC LOUVER OR WINDOW INSERT) THE LESSER DESIGN PRESSURE VALUE OF ANY ASSEMBLY OR THE STOREFRONT WINDOW SHALL BE THE DESIGN PRESSURE FOR THE ENTIRE SYSTEM.

PRODUCT REVISED
as complying with the Florida Building Code
Acceptance No 16-0305.04
Expiration Date Jan 17, 2018
By Manuel Perez
Miami-Dade Product Control

Rev A

1070 TECHNOLOGY DRIVE
N. VENICE, FL 34275
P.O. BOX 1529
NOKOMIS, FL 34274
(941)-480-1600

CERT. OF AUTH. #29296

Series	Desc.	Scale	Sheet	DWG No.	Rev.
SS-3500	STOREFRONT WINDOW SYSTEM DETAILS - LM	NTS	6 OF 16	MD-3500-2-LM	

Title	Drawn By	Date
TABLE 4	J ROSOWSKI	03/23/16

ANTHONY LYNN MILLER
LICENSE
No. 58705
STATE OF FLORIDA
PROFESSIONAL ENGINEER
5/2/16

A. LYNN MILLER, P.E.
P.E.# 58705

TABLE 5:

Jamb Anchor Spacing — Shim Thickness = 1/4"

Nominal Dim. Centerline Width	Nominal Dim. Frame Height	Installed with Group "A" Anchors	Installed with Group "B" Anchors	Installed with Group "C" Anchors	Installed with Group "D" Anchors	Installed with Group "E" Anchors
24"	48"	18"	18"	18"	18"	18"
30"		18"	18"	18"	18"	18"
36"		18"	18"	18"	18"	18"
42"		18"	18"	18"	18"	18"
48"		18"	18"	18"	18"	18"
54"		18"	18"	18"	18"	18"
60"		18"	18"	18"	18"	18"
70"		18"	18"	18"	18"	18"
72"		18"	18"	18"	18"	18"
84"		18"	18"	18"	18"	18"
90"		18"	18"	18"	18"	18"
92"		18"	18"	18"	18"	18"
96"		18"	18"	18"	18"	18"
102"		18"	18"	18"	18"	18"
108"		18"	18"	18"	18"	18"
120"		18"	18"	18"	18"	18"
132"		18"	18"	18"	18"	18"
144"		18"	18"	18"	18"	18"
24"	60"	18"	18"	18"	18"	18"
30"		18"	18"	18"	18"	18"
36"		18"	18"	18"	18"	18"
42"		18"	18"	18"	18"	18"
48"		18"	18"	18"	18"	18"
54"		18"	18"	18"	18"	18"
60"		18"	18"	18"	18"	18"
70"		18"	18"	18"	18"	18"
72"		18"	18"	18"	18"	18"
84"		18"	18"	18"	18"	18"
90"		18"	18"	18"	18"	18"
92"		18"	18"	18"	18"	18"
96"		18"	18"	18"	18"	18"
102"		18"	18"	18"	18"	18"
108"		18"	18"	18"	18"	18"
120"		18"	18"	18"	18"	18"
24"	72"	18"	18"	18"	18"	18"
30"		18"	18"	18"	18"	18"
36"		18"	18"	18"	18"	18"
42"		18"	18"	18"	18"	18"
48"		18"	18"	18"	18"	18"
54"		18"	18"	15"	18"	18"
60"		18"	18"	15"	18"	18"
70"		18"	18"	15"	18"	18"
72"		18"	18"	15"	18"	18"
84"		18"	18"	15"	18"	18"
90"		18"	18"	15"	18"	18"
92"		18"	18"	15"	18"	18"
96"		18"	18"	15"	18"	18"
24"	78"	18"	18"	18"	18"	18"
30"		18"	18"	18"	18"	18"
36"		18"	18"	18"	18"	18"
42"		18"	18"	18"	18"	18"
48"		18"	18"	16-1/2"	18"	18"
54"		18"	18"	16-1/2"	18"	18"
60"		16-1/2"	18"	16-1/2"	18"	18"
70"		16-1/2"	18"	13-3/16"	18"	18"
72"		16-1/2"	18"	13-3/16"	18"	18"
84"		16-1/2"	18"	13-3/16"	18"	18"
90"		16-1/2"	18"	13-3/16"	18"	18"
92"		16-1/2"	18"	13-3/16"	18"	18"
24"	84"	18"	18"	18"	18"	18"
30"		18"	18"	18"	18"	18"
36"		18"	18"	18"	18"	18"
42"		18"	18"	18"	18"	18"
48"		18"	18"	18"	18"	18"
54"		18"	18"	14-3/8"	18"	18"
60"		18"	18"	14-3/8"	18"	18"
70"		18"	18"	14-3/8"	18"	18"
72"		18"	18"	14-3/8"	18"	18"
84"		18"	18"	14-3/8"	18"	18"

Jamb Anchor Spacing — Shim Thickness = 1/4"

Nominal Dim. Centerline Width	Nominal Dim. Frame Height	Installed with Group "A" Anchors	Installed with Group "B" Anchors	Installed with Group "C" Anchors	Installed with Group "D" Anchors	Installed with Group "E" Anchors
24"	90"	18"	18"	18"	18"	18"
30"		18"	18"	18"	18"	18"
36"		18"	18"	18"	18"	18"
42"		18"	18"	18"	18"	18"
48"		18"	18"	15-5/8"	18"	18"
54"		18"	18"	15-5/8"	18"	18"
60"		15-5/8"	18"	15-5/8"	18"	18"
70"		15-5/8"	18"	13"	18"	18"
72"		15-5/8"	18"	13"	18"	18"
24"	97-3/4"	18"	18"	18"	18"	18"
30"		18"	18"	18"	18"	18"
36"		18"	18"	18"	18"	18"
42"		18"	18"	17-1/8"	18"	18"
48"		18"	18"	17-1/8"	18"	18"
54"		17-1/8"	18"	14-5/16"	18"	18"
60"		17-1/8"	18"	14-5/16"	18"	18"
70"		14-5/16"	18"	12-1/4"	18"	18"
72"		14-5/16"	18"	12-1/4"	18"	18"
24"	102"	18"	18"	18"	18"	18"
30"		18"	18"	18"	18"	18"
36"		18"	18"	18"	18"	18"
42"		18"	18"	18"	18"	18"
48"		18"	18"	15"	18"	18"
54"		18"	18"	15"	18"	18"
60"		15"	18"	12-7/8"	18"	18"
70"		15"	18"	12-7/8"	18"	18"
24"	108"	18"	18"	18"	18"	18"
30"		18"	18"	18"	18"	18"
36"		18"	18"	18"	18"	18"
42"		18"	18"	16"	18"	18"
48"		18"	18"	16"	18"	18"
54"		16"	18"	13-11/16"	18"	18"
60"		16"	18"	13-11/16"	18"	18"
24"	114"	18"	18"	18"	18"	18"
30"		18"	18"	18"	18"	18"
36"		18"	18"	18"	18"	18"
42"		18"	18"	17"	18"	18"
48"		17"	18"	14-9/16"	18"	18"
54"		17"	18"	14-9/16"	18"	18"
60"		14-9/16"	18"	12-3/4"	18"	18"
24"	120"	18"	18"	18"	18"	18"
30"		18"	18"	18"	18"	18"
36"		18"	18"	18"	18"	18"
42"		18"	18"	18"	18"	18"
48"		18"	18"	15-7/16"	18"	18"
54"		15-7/16"	18"	13-1/2"	18"	18"
60"		15-7/16"	18"	13-1/2"	18"	18"
24"	126"	18"	18"	18"	18"	18"
30"		18"	18"	18"	18"	18"
36"		18"	18"	18"	18"	18"
42"		18"	18"	16-5/16"	18"	18"
48"		18"	18"	14-1/4"	18"	18"
54"		16-5/16"	18"	14-1/4"	18"	18"
24"	132"	18"	18"	18"	18"	18"
30"		18"	18"	18"	18"	18"
36"		18"	18"	18"	18"	18"
42"		18"	18"	17-1/8"	18"	18"
48"		17-1/8"	18"	15"	18"	18"
54"		15"	18"	13-5/16"	18"	18"
24"	138"	18"	18"	18"	18"	18"
30"		18"	18"	18"	18"	18"
36"		18"	18"	18"	18"	18"
42"		18"	18"	15-3/4"	18"	18"
48"		18"	18"	14"	18"	18"
24"	144"	18"	18"	18"	18"	18"
30"		18"	18"	18"	18"	18"
36"		18"	18"	18"	18"	18"
42"		18"	18"	16-1/2"	18"	18"
48"		16-1/2"	18"	14-11/16"	18"	18"

CENTERLINE WIDTH 1 = FRAME WIDTH - 1-3/4"

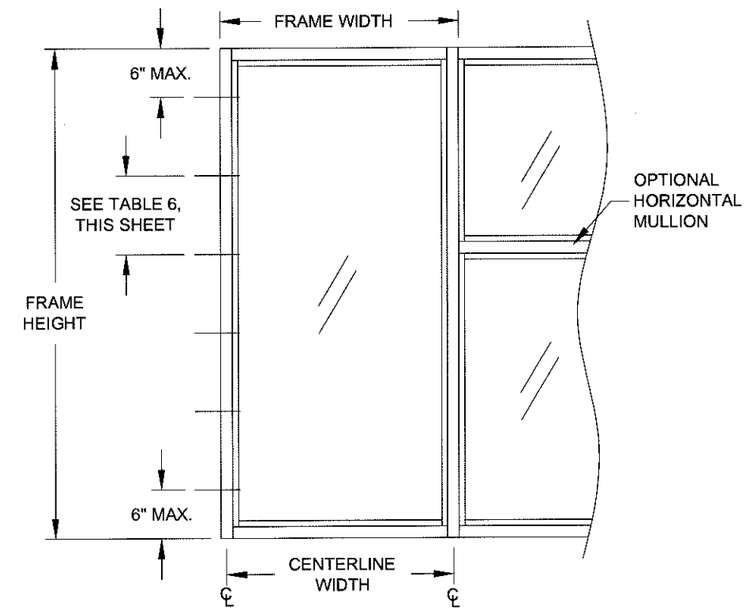

JAMB ANCHOR SPACING

PRODUCT REVISED
as complying with the Florida Building Code
Acceptance No. 16-0505.04
Expiration Date Jan 17, 2018
By Manuel Perez
Miami-Dade Product Control

Rev A

1070 TECHNOLOGY DRIVE
N. VENICE, FL 34275
P.O. BOX 1529
NOKOMIS, FL 34274
(941)-480-1600
CERT. OF AUTH. #29296

Series	Desc.	Title	Sheet	Scale	DWG No.	Drawn By	Date	Rev.
SS-3500	STOREFRONT WINDOW SYSTEM DETAILS - LM	TABLE 5	7 OF 16	NTS	MD-3500-2-LM	J ROSOWSKI	03/23/16	

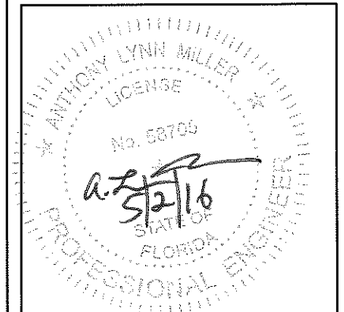

A. LYNN MILLER, P.E.
P.E.# 58705

TABLE 6:

Jamb Anchor Spacing — Shim Thickness = 1/2"

Nominal Dim. Centerline Width	Nominal Dim. Frame Height	Installed with Group "A" Anchors	Installed with Group "B" Anchors	Installed with Group "C" Anchors	Installed with Group "D" Anchors	Installed with Group "E" Anchors
24"	48"	18"	18"	18"	18"	18"
30"		18"	18"	18"	18"	18"
36"		18"	18"	18"	18"	18"
42"		18"	18"	18"	18"	18"
48"		18"	18"	18"	18"	18"
54"		18"	18"	18"	18"	18"
60"		18"	18"	18"	18"	18"
70"		18"	18"	18"	18"	18"
72"		18"	18"	18"	18"	18"
84"		18"	18"	18"	18"	18"
90"		18"	18"	18"	18"	18"
92"		18"	18"	18"	18"	18"
96"		18"	18"	18"	18"	18"
102"		18"	18"	18"	18"	18"
108"		18"	18"	18"	18"	18"
120"		18"	18"	18"	18"	18"
132"		18"	18"	18"	18"	18"
144"		18"	18"	18"	18"	18"
24"	60"	18"	18"	18"	18"	18"
30"		18"	18"	18"	18"	18"
36"		16"	16"	18"	18"	18"
42"		16"	16"	18"	18"	18"
48"		16"	16"	18"	18"	18"
54"		16"	16"	18"	18"	18"
60"		16"	16"	18"	18"	18"
70"		16"	16"	18"	18"	18"
72"		16"	16"	18"	18"	18"
84"		16"	16"	18"	18"	18"
90"		16"	16"	18"	18"	18"
92"		16"	16"	18"	18"	18"
96"		16"	16"	18"	18"	18"
102"		16"	16"	18"	18"	18"
108"		16"	16"	18"	18"	18"
120"		16"	16"	18"	18"	18"
24"	72"	18"	18"	18"	18"	18"
30"		18"	18"	18"	18"	18"
36"		15"	15"	18"	18"	18"
42"		15"	15"	18"	18"	18"
48"		12"	12"	18"	18"	18"
54"		12"	12"	15"	18"	18"
60"		12"	12"	15"	18"	18"
70"		12"	12"	15"	18"	18"
72"		12"	12"	15"	18"	18"
84"		12"	12"	15"	18"	18"
90"		12"	12"	15"	18"	18"
92"		12"	12"	15"	18"	18"
96"		12"	12"	15"	18"	18"
24"	78"	18"	18"	18"	18"	18"
30"		16-1/2"	16-1/2"	18"	18"	18"
36"		16-1/2"	16-1/2"	18"	18"	18"
42"		13-3/16"	13-3/16"	18"	18"	18"
48"		13-3/16"	13-3/16"	16-1/2"	18"	18"
54"		11"	11"	16-1/2"	18"	18"
60"		11"	11"	16-1/2"	18"	18"
70"		11"	11"	13-3/16"	18"	18"
72"		11"	11"	13-3/16"	18"	18"
84"		11"	11"	13-3/16"	18"	18"
90"		11"	11"	13-3/16"	18"	18"
92"		11"	11"	13-3/16"	18"	18"
24"	84"	18"	18"	18"	18"	18"
30"		18"	18"	18"	18"	18"
36"		14-3/8"	14-3/8"	18"	18"	18"
42"		14-3/8"	14-3/8"	18"	18"	18"
48"		12"	12"	18"	18"	18"
54"		12"	12"	14-3/8"	18"	18"
60"		10-5/16"	10-5/16"	14-3/8"	18"	18"
70"		10-5/16"	10-5/16"	14-3/8"	18"	18"
72"		10-5/16"	10-5/16"	14-3/8"	18"	18"
84"		10-5/16"	10-5/16"	14-3/8"	18"	18"

Jamb Anchor Spacing — Shim Thickness = 1/2"

Nominal Dim. Centerline Width	Nominal Dim. Frame Height	Installed with Group "A" Anchors	Installed with Group "B" Anchors	Installed with Group "C" Anchors	Installed with Group "D" Anchors	Installed with Group "E" Anchors
24"	90"	18"	18"	18"	18"	18"
30"		18"	18"	18"	18"	18"
36"		15-5/8"	15-5/8"	18"	18"	18"
42"		13"	13"	18"	18"	18"
48"		13"	13"	15-5/8"	18"	18"
54"		11-1/8"	11-1/8"	15-5/8"	18"	18"
60"		11-1/8"	11-1/8"	15-5/8"	18"	18"
70"		9-3/4"	9-3/4"	13"	18"	18"
72"		9-3/4"	9-3/4"	13"	18"	18"
24"	97-3/4"	18"	18"	18"	18"	18"
30"		17-1/8"	17-1/8"	18"	18"	18"
36"		14-5/16"	14-5/16"	18"	18"	18"
42"		12-1/4"	12-1/4"	17-1/8"	18"	18"
48"		12-1/4"	12-1/4"	17-1/8"	18"	18"
54"		10-3/4"	10-3/4"	14-5/16"	18"	18"
60"		10-3/4"	10-3/4"	14-5/16"	17-1/8"	18"
70"		9-1/2"	9-1/2"	12-1/4"	17-1/8"	18"
72"		9-1/2"	9-1/2"	12-1/4"	17-1/8"	18"
24"	102"	18"	18"	18"	18"	18"
30"		18"	18"	18"	18"	18"
36"		15"	15"	18"	18"	18"
42"		12-7/8"	12-7/8"	18"	18"	18"
48"		11-1/4"	11-1/4"	15"	18"	18"
54"		11-1/4"	11-1/4"	15"	18"	18"
60"		10"	10"	12-7/8"	18"	18"
70"		9"	9"	12-7/8"	18"	18"
24"	108"	18"	18"	18"	18"	18"
30"		16"	16"	18"	18"	18"
36"		13-11/16"	13-11/16"	18"	18"	18"
42"		13-11/16"	13-11/16"	16"	18"	18"
48"		12"	12"	16"	18"	18"
54"		10-11/16"	10-11/16"	13-11/16"	18"	18"
60"		9-5/8"	9-5/8"	13-11/16"	18"	18"
24"	114"	18"	18"	18"	18"	18"
30"		17"	17"	18"	18"	18"
36"		14-9/16"	14-9/16"	18"	18"	18"
42"		12-3/4"	12-3/4"	17"	18"	18"
48"		11-5/16"	11-5/16"	14-9/16"	18"	18"
54"		10-3/16"	10-3/16"	14-9/16"	18"	18"
60"		9-1/4"	9-1/4"	12-3/4"	17"	18"
24"	120"	18"	18"	18"	18"	18"
30"		18"	18"	18"	18"	18"
36"		13-1/2"	13-1/2"	18"	18"	18"
42"		12"	12"	18"	18"	18"
48"		10-13/16"	10-13/16"	15-7/16"	18"	18"
54"		10-13/16"	10-13/16"	13-1/2"	18"	18"
60"		9-13/16"	9-13/16"	13-1/2"	18"	18"
24"	126"	18"	18"	18"	18"	18"
30"		16-5/16"	16-5/16"	18"	18"	18"
36"		14-1/4"	14-1/4"	18"	18"	18"
42"		12-11/16"	12-11/16"	16-5/16"	18"	18"
48"		11-3/8"	11-3/8"	14-1/4"	18"	18"
54"		10-3/8"	10-3/8"	14-1/4"	18"	18"
24"	132"	18"	18"	18"	18"	18"
30"		17-1/8"	17-1/8"	18"	18"	18"
36"		15"	15"	18"	18"	18"
42"		12"	12"	17-1/8"	18"	18"
48"		10-15/16"	10-15/16"	15"	18"	18"
54"		10"	10"	13-5/16"	17-1/8"	18"
24"	138"	18"	18"	18"	18"	18"
30"		15-3/4"	15-3/4"	18"	18"	18"
36"		14"	14"	18"	18"	18"
42"		12-5/8"	12-5/8"	15-3/4"	18"	18"
48"		11-7/16"	11-7/16"	14"	18"	18"
24"	144"	18"	18"	18"	18"	18"
30"		16-1/2"	16-1/2"	18"	18"	18"
36"		14-11/16"	14-11/16"	18"	18"	18"
42"		12"	12"	16-1/2"	18"	18"
48"		11"	11"	14-11/16"	18"	18"

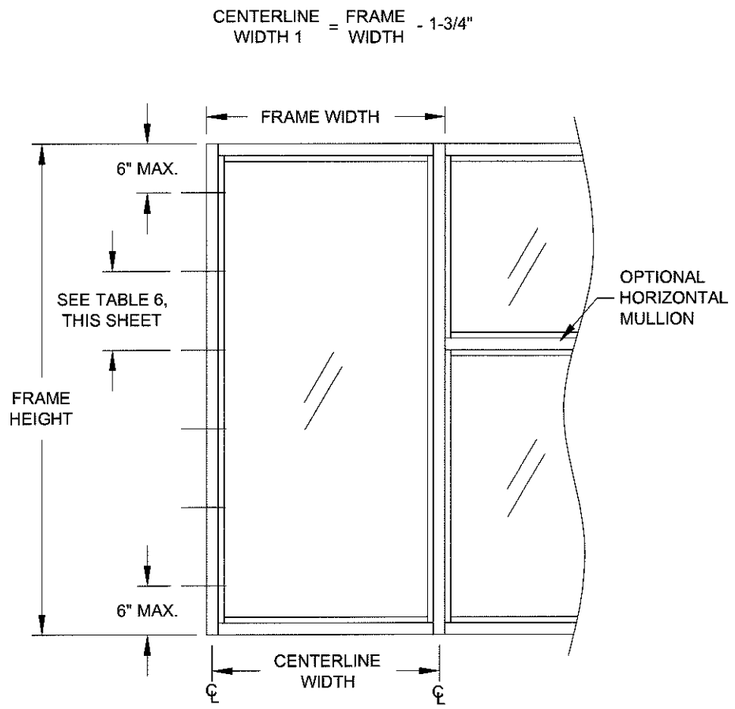

JAMB ANCHOR SPACING

PRODUCT REVISED
as complying with the Florida Building Code
Acceptance No 16-0505.04
Expiration Date Jan. 19, 2018
By Manuel Perez
Miami Dade Product Control

Rev A

1070 TECHNOLOGY DRIVE
N. VENICE, FL 34275
P.O. BOX 1529
NOKOMIS, FL 34274
(941)-480-1600

CERT. OF AUTH. #29296

Series	Desc.	Scale	Sheet	DWG No.	Drawn By	Rev.	Date
SS-3500	STOREFRONT WINDOW SYSTEM DETAILS - LM	NTS	8 OF 16	MD-3500-2-LM	J ROSOWSKI		03/23/16

Title: TABLE 6

ANTHONY LYNN MILLER LICENSE No. 58705 STATE OF FLORIDA PROFESSIONAL ENGINEER
5/2/16

A. LYNN MILLER, P.E.
P.E.# 58705

TABLE 7:

Mid-Panel Anchor Quantity						Shim Thickness = 1/4"
Nominal Dim.		Installed with Group "A" Anchors	Installed with Group "B" Anchors	Installed with Group "C" Anchors	Installed with Group "D" Anchors	Installed with Group "E" Anchors
Centerline Width	Frame Height					
24"	48"	1	1	1	1	1
30"		1	1	1	1	1
36"		1	1	1	1	1
42"		2	1	1	1	1
48"		2	2	2	2	1
54"		3	2	2	2	2
60"		3	2	2	2	2
70"		4	3	3	3	3
72"		4	3	3	3	3
84"		5	4	4	4	4
90"		5	4	4	4	4
92"		5	5	5	5	5
96"		5	5	5	5	5
102"		6	5	5	5	5
108"		6	6	6	6	6
120"		7	6	6	6	6
132"		8	7	7	7	7
144"		9	8	8	8	8
24"	60"	1	1	1	1	1
30"		1	1	1	1	1
36"		1	1	1	1	1
42"		2	1	1	1	1
48"		2	2	2	2	1
54"		3	2	2	2	2
60"		3	2	2	2	2
70"		4	3	3	3	3
72"		4	3	3	3	3
84"		5	4	4	4	4
90"		6	4	4	4	4
92"		6	5	5	5	5
96"		6	5	5	5	5
102"		7	5	5	5	5
108"		7	6	6	6	6
120"		8	6	6	6	6
24"	72"	1	1	1	1	1
30"		1	1	1	1	1
36"		1	1	1	1	1
42"		2	1	1	1	1
48"		2	2	2	2	1
54"		3	2	2	2	2
60"		3	2	2	2	2
70"		4	3	3	3	3
72"		4	3	3	3	3
84"		5	4	4	4	4
90"		6	4	5	4	4
92"		6	5	5	5	5
96"		7	5	5	5	5
24"	78"	1	1	1	1	1
30"		1	1	1	1	1
36"		1	1	1	1	1
42"		2	1	1	1	1
48"		2	2	2	2	1
54"		3	2	2	2	2
60"		3	2	2	2	2
70"		4	3	3	3	3
72"		4	3	3	3	3
84"		5	4	4	4	4
90"		6	5	5	4	4
92"		6	5	5	5	5
24"	84"	1	1	1	1	1
30"		1	1	1	1	1
36"		1	1	1	1	1
42"		2	1	1	1	1
48"		2	2	2	2	1
54"		3	2	2	2	2
60"		3	2	2	2	2
70"		4	3	3	3	3
72"		4	3	3	3	3
84"		5	4	4	4	4

Mid-Panel Anchor Quantity						Shim Thickness = 1/4"
Nominal Dim.		Installed with Group "A" Anchors	Installed with Group "B" Anchors	Installed with Group "C" Anchors	Installed with Group "D" Anchors	Installed with Group "E" Anchors
Centerline Width	Frame Height					
24"	90"	1	1	1	1	1
30"		1	1	1	1	1
36"		1	1	1	1	1
42"		2	1	1	1	1
48"		2	2	2	2	1
54"		3	2	2	2	2
60"		3	2	2	2	2
70"		4	3	3	3	3
72"		4	3	3	3	3
24"	97-3/4"	1	1	1	1	1
30"		1	1	1	1	1
36"		1	1	1	1	1
42"		2	1	1	1	1
48"		2	2	2	2	1
54"		3	2	2	2	2
60"		3	2	2	2	2
70"		4	3	3	3	3
72"		4	3	3	3	3
24"	102"	1	1	1	1	1
30"		1	1	1	1	1
36"		1	1	1	1	1
42"		2	1	1	1	1
48"		2	2	2	2	1
54"		3	2	2	2	2
60"		3	2	2	2	2
70"		4	3	3	3	3
24"	108"	1	1	1	1	1
30"		1	1	1	1	1
36"		1	1	1	1	1
42"		2	1	1	1	1
48"		2	2	2	2	1
54"		3	2	2	2	2
60"		3	2	2	2	2
24"	114"	1	1	1	1	1
30"		1	1	1	1	1
36"		1	1	1	1	1
42"		2	1	1	1	1
48"		2	2	2	2	1
54"		3	2	2	2	2
60"		3	2	2	2	2
24"	120"	1	1	1	1	1
30"		1	1	1	1	1
36"		1	1	1	1	1
42"		2	1	1	1	1
48"		2	2	2	2	1
54"		3	2	2	2	2
60"		3	2	2	2	2
24"	126"	1	1	1	1	1
30"		1	1	1	1	1
36"		1	1	1	1	1
42"		2	1	1	1	1
48"		2	2	2	2	1
54"		3	2	2	2	2
24"	132"	1	1	1	1	1
30"		1	1	1	1	1
36"		1	1	1	1	1
42"		2	1	1	1	1
48"		2	2	2	2	1
54"		3	2	2	2	2
24"	138"	1	1	1	1	1
30"		1	1	1	1	1
36"		1	1	1	1	1
42"		2	1	1	1	1
48"		2	2	2	2	1
24"	144"	1	1	1	1	1
30"		1	1	1	1	1
36"		1	1	1	1	1
42"		2	1	1	1	1
48"		2	2	2	2	1

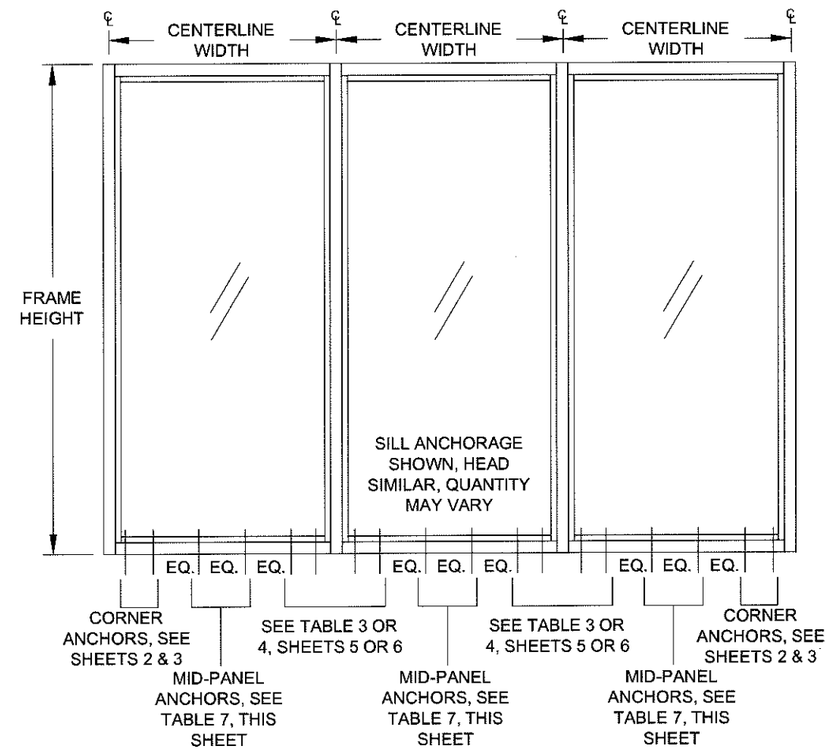

MID-PANEL ANCHOR PATTERN

NOTES:

1. MID-PANEL ANCHORS TO BE EQUALLY SPACED, +/- 1/2".

PRODUCT REVISED
as complying with the Florida
Building Code
Acceptance No 16-0505.04
Expiration Date Jan. 17, 2018
By Manuel Perez
Miami-Dade Product Control

Rev A

1070 TECHNOLOGY DRIVE
N. VENICE, FL 34275
P.O. BOX 1529
NOKOMIS, FL 34274
(941)-480-1600

CERT. OF AUTH. #29296

Drawn By	J ROSOWSKI
Rev.	
Date	03/23/16
DWG No.	MD-3500-2-LM
Sheet	9 OF 16
Scale	NTS
Series	SS-3500
Desc.	STOREFRONT WINDOW SYSTEM DETAILS - LM
Title	TABLE 7

A. LYNN MILLER, P.E.
P.E.# 58705

TABLE 8:

Mid-Panel Anchor Quantity — Shim Thickness = 1/2"

Nominal Dim. Centerline Width	Nominal Dim. Frame Height	Installed with Group "A" Anchors	Installed with Group "B" Anchors	Installed with Group "C" Anchors	Installed with Group "D" Anchors	Installed with Group "E" Anchors
24"	48"	1	1	1	1	1
30"		1	1	1	1	1
36"		2	2	2	1	1
42"		2	2	2	2	1
48"		3	3	2	2	1
54"		4	4	3	2	2
60"		4	4	3	3	2
70"		5	5	4	3	3
72"		6	6	4	3	3
84"		7	7	5	4	4
90"		7	7	6	4	4
92"		8	8	6	5	5
96"		8	8	6	5	5
102"		9	9	6	5	5
108"		9	9	7	6	6
120"		11	11	8	6	6
132"		12	12	9	7	7
144"		13	13	10	8	8
24"	60"	1	1	1	1	1
30"		1	1	1	1	1
36"		2	2	2	1	1
42"		2	2	2	2	1
48"		3	3	2	2	1
54"		4	4	3	2	2
60"		4	4	3	3	2
70"		6	6	4	4	3
72"		6	6	5	4	3
84"		8	8	6	5	4
90"		8	8	6	5	4
92"		9	9	6	5	5
96"		9	9	7	5	5
102"		10	10	7	6	5
108"		11	11	8	6	6
120"		12	12	9	7	6
24"	72"	1	1	1	1	1
30"		1	1	1	1	1
36"		2	2	2	1	1
42"		2	2	2	2	1
48"		3	3	2	2	1
54"		4	4	3	2	2
60"		4	4	3	3	2
70"		6	6	4	4	3
72"		6	6	5	4	3
84"		8	8	6	5	4
90"		9	9	7	5	4
92"		9	9	7	6	5
96"		10	10	7	6	5
24"	78"	1	1	1	1	1
30"		1	1	1	1	1
36"		2	2	2	1	1
42"		2	2	2	2	1
48"		3	3	2	2	1
54"		4	4	3	2	2
60"		4	4	3	3	2
70"		6	6	4	4	3
72"		6	6	5	4	3
84"		8	8	6	5	4
90"		9	9	7	5	4
92"		10	10	7	6	5
24"	84"	1	1	1	1	1
30"		1	1	1	1	1
36"		2	2	2	1	1
42"		2	2	2	2	1
48"		3	3	2	2	1
54"		4	4	3	2	2
60"		4	4	3	3	2
70"		6	6	4	4	3
72"		6	6	5	4	3
84"		8	8	6	5	4

Mid-Panel Anchor Quantity — Shim Thickness = 1/2"

Nominal Dim. Centerline Width	Nominal Dim. Frame Height	Installed with Group "A" Anchors	Installed with Group "B" Anchors	Installed with Group "C" Anchors	Installed with Group "D" Anchors	Installed with Group "E" Anchors
24"	90"	1	1	1	1	1
30"		1	1	1	1	1
36"		2	2	2	1	1
42"		2	2	2	2	1
48"		3	3	2	2	1
54"		4	4	3	2	2
60"		4	4	3	3	2
70"		6	6	4	4	3
72"		6	6	5	4	3
24"	97-3/4"	1	1	1	1	1
30"		1	1	1	1	1
36"		2	2	2	1	1
42"		2	2	2	2	1
48"		3	3	2	2	1
54"		4	4	3	2	2
60"		4	4	3	3	2
70"		6	6	4	4	3
72"		6	6	5	4	3
24"	102"	1	1	1	1	1
30"		1	1	1	1	1
36"		2	2	2	1	1
42"		2	2	2	2	1
48"		3	3	2	2	1
54"		4	4	3	2	2
60"		4	4	3	3	2
70"		6	6	4	4	3
24"	108"	1	1	1	1	1
30"		1	1	1	1	1
36"		2	2	2	1	1
42"		2	2	2	2	1
48"		3	3	2	2	1
54"		4	4	3	2	2
60"		4	4	3	3	2
24"	114"	1	1	1	1	1
30"		1	1	1	1	1
36"		2	2	2	1	1
42"		2	2	2	2	1
48"		3	3	2	2	1
54"		4	4	3	2	2
60"		4	4	3	3	2
24"	120"	1	1	1	1	1
30"		1	1	1	1	1
36"		2	2	2	1	1
42"		2	2	2	2	1
48"		3	3	2	2	1
54"		4	4	3	2	2
60"		4	4	3	3	2
24"	126"	1	1	1	1	1
30"		1	1	1	1	1
36"		2	2	2	1	1
42"		2	2	2	2	1
48"		3	3	2	2	1
54"		4	4	3	2	2
24"	132"	1	1	1	1	1
30"		1	1	1	1	1
36"		2	2	2	1	1
42"		2	2	2	2	1
48"		3	3	2	2	1
54"		4	4	3	2	2
24"	138"	1	1	1	1	1
30"		1	1	1	1	1
36"		2	2	2	1	1
42"		2	2	2	2	1
48"		3	3	2	2	1
24"	144"	1	1	1	1	1
30"		1	1	1	1	1
36"		2	2	2	1	1
42"		2	2	2	2	1
48"		3	3	2	2	1

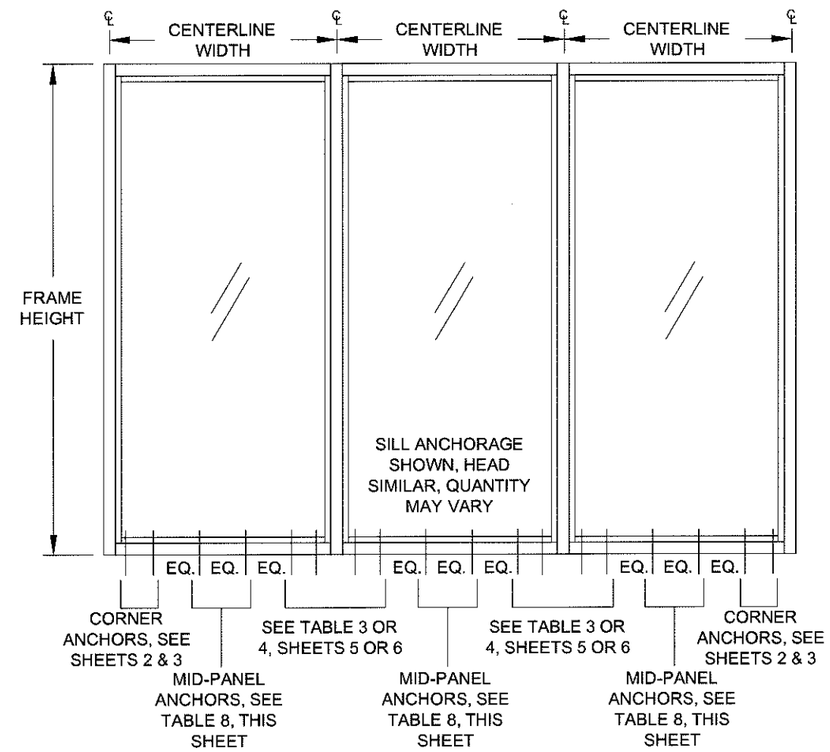

MID-PANEL ANCHOR PATTERN

NOTES:

1. MID-PANEL ANCHORS TO BE EQUALLY SPACED, +/- 1/2".

PRODUCT REVISED
as complying with the Florida
Building Code
Acceptance No 16-0505.04
Expiration Date Jan. 17, 2018
By Manuel Perez
Miami Dade Product Control

Rev A

1070 TECHNOLOGY DRIVE
N. VENICE, FL 34275
P.O. BOX 1529
NOKOMIS, FL 34274
(941)-480-1600

CERT. OF AUTH. #29296

Series	Desc.	Title	Scale	Sheet	DWG No.	Rev.	Drawn By	Date
SS-3500	STOREFRONT WINDOW SYSTEM DETAILS - LM	TABLE 8	NTS	10 OF 16	MD-3500-2-LM		J ROSOWSKI	03/23/16

ANTHONY LYNN MILLER LICENSE No 58705 STATE OF FLORIDA PROFESSIONAL ENGINEER
5/2/16

A. LYNN MILLER, P.E.
P.E.# 58705

TABLE 9:

Maximum Vertical Mullion Design Pressure, (psf)				
Average Centerline Width	Frame Height	No Reinforcement	Alum. Reinforcement (part #4)	Steel Reinforcement (part #10)
24"	48"	+90/-90	+90/-100	+90/-120
30"		+90/-90	+90/-100	+90/-120
36"		+90/-90	+90/-100	+90/-120
42"		+90/-90	+90/-100	+90/-120
48"		+90/-90	+90/-100	+90/-120
54"		+90/-90	+90/-100	+90/-120
60"		+90/-90	+90/-100	+90/-120
70"		+90/-90	+90/-100	+90/-120
72"		+90/-90	+90/-100	+90/-120
84"		+90/-90	+90/-100	+90/-120
90"		+90/-90	+90/-100	+90/-120
92"		+90/-90	+90/-100	+90/-120
96"		+90/-90	+90/-100	+90/-120
102"			+90/-100	+90/-120
108"			+90/-100	+90/-120
120"			+90/-100	+90/-120
132"				+90/-100
144"				+90/-100
24"	60"	+90/-90	+90/-100	+90/-120
30"		+90/-90	+90/-100	+90/-120
36"		+90/-90	+90/-100	+90/-120
42"		+90/-90	+90/-100	+90/-120
48"		+90/-90	+90/-100	+90/-120
54"		+90/-90	+90/-100	+90/-120
60"		+90/-90	+90/-100	+90/-120
70"		+90/-90	+90/-100	+90/-120
72"		+90/-90	+90/-100	+90/-120
84"			+90/-100	+90/-120
90"			+90/-100	+90/-120
92"			+90/-100	+90/-120
96"			+90/-100	+90/-120
102"				+90/-100
108"				+90/-100
120"				+90/-100
24"	72"	+90/-90	+90/-100	+90/-120
30"		+90/-90	+90/-100	+90/-120
36"		+90/-90	+90/-100	+90/-120
42"		+90/-90	+90/-100	+90/-120
48"		+90/-90	+90/-100	+90/-120
54"		+90/-90	+90/-100	+90/-120
60"		+90/-90	+90/-100	+90/-120
70"			+90/-100	+90/-120
72"			+90/-100	+90/-120
84"				+90/-100
90"				+90/-100
92"				+90/-100
96"				+90/-100
24"	78"	+90/-90	+90/-100	+90/-120
30"		+90/-90	+90/-100	+90/-120
36"		+90/-90	+90/-100	+90/-120
42"		+90/-90	+90/-100	+90/-120
48"		+90/-90	+90/-100	+90/-120
54"		+90/-90	+90/-100	+90/-120
60"		+90/-90	+90/-100	+90/-120
70"			+90/-100	+90/-120
72"			+90/-100	+90/-120
84"				+90/-100
90"				+90/-100
92"				+90/-100
24"	84"	+90/-90	+90/-100	+90/-120
30"		+90/-90	+90/-100	+90/-120
36"		+90/-90	+90/-100	+90/-120
42"		+90/-90	+90/-100	+90/-120
48"		+90/-90	+90/-100	+90/-120
54"		+90/-90	+90/-100	+90/-120
60"			+90/-100	+90/-120
70"			+90/-100	+90/-120
72"				+90/-100
84"				+90/-100

Maximum Vertical Mullion Design Pressure, (psf)				
Average Centerline Width	Frame Height	No Reinforcement	Alum. Reinforcement (part #4)	Steel Reinforcement (part #10)
24"	90"	+90/-90	+90/-100	+90/-120
30"		+90/-90	+90/-100	+90/-120
36"		+90/-90	+90/-100	+90/-120
42"		+90/-90	+90/-100	+90/-120
48"		+89.4/-89.4	+90/-100	+90/-120
54"			+90/-100	+90/-120
60"			+90/-100	+90/-120
70"				+90/-100
72"				+90/-100
24"	97-3/4	+90/-90	+90/-100	+90/-120
30"		+90/-90	+90/-100	+90/-120
36"		+90/-90	+90/-100	+90/-120
42"		+87.9/-87.9	+90/-100	+90/-120
48"		+80/-80	+90/-100	+90/-120
54"			+90/-100	+90/-120
60"				+90/-100
70"				+90/-100
72"				+90/-100
24"	102"	+90/-90	+90/-100	+90/-120
30"		+90/-90	+90/-100	+90/-120
36"		+88.3/-88.3	+90/-100	+90/-120
42"		+77.1/-77.1	+90/-100	+90/-120
48"			+90/-100	+90/-120
54"			+90/-100	+90/-120
60"				+90/-100
70"				+90/-100
24"	108"	+90/-90	+90/-100	+90/-120
30"		+87.5/-87.5	+90/-100	+90/-120
36"		+74/-74	+90/-100	+90/-120
42"		+64.5/-64.5	+90/-100	+90/-120
48"			+90/-100	+90/-120
54"				+90/-100
60"				+90/-100
24"	114"	+90/-90	+90/-100	+90/-120
30"		+74.2/-74.2	+90/-100	+90/-120
36"		+62.6/-62.6	+90/-100	+90/-120
42"			+90/-100	+90/-120
48"			+90/-100	+90/-120
54"				+90/-100
60"				+90/-100
24"	120"	+78.5/-78.5	+90/-100	+90/-120
30"		+63.4/-63.4	+90/-100	+90/-120
36"		+53.5/-53.5	+90/-100	+90/-120
42"			+90/-100	+90/-120
48"			+90/-100	+90/-120
54"				+90/-100
60"				+90/-100
24"	126"	+67.7/-67.7	+90/-100	+90/-120
30"		+54.6/-54.6	+90/-100	+90/-120
36"		+46/-46	+90/-100	+90/-120
42"			+87.1/-96.8	+90/-116.5
48"				+90/-100
54"				+84/-93.4
24"	132"	+58.8/-58.8	+90/-100	+90/-120
30"		+47.4/-47.4	+90/-100	+90/-120
36"			+87.1/-96.7	+90/-116.4
42"			+75.4/-83.8	+90/-100.9
48"				+80.5/-89.4
54"				+72.6/-80.6
24"	138"	+51.4/-51.4	+90/-100	+90/-120
30"		+41.4/-41.4	+90/-100	+90/-120
36"			+76/-84.4	+90/-101.6
42"				+79.2/-88
48"				+70.1/-77.9
24"	144"	+45.2/-45.2	+90/-100	+90/-120
30"		+36.4/-36.4	+79.5/-88.3	+90/-106.3
36"			+66.7/-74.1	+80.3/-89.3
42"				+69.5/-77.2
48"				+61.5/-68.3

$$\text{AVERAGE CENTERLINE WIDTH} = \frac{\text{CENTERLINE WIDTH 1} + \text{CENTERLINE WIDTH 2}}{2}$$

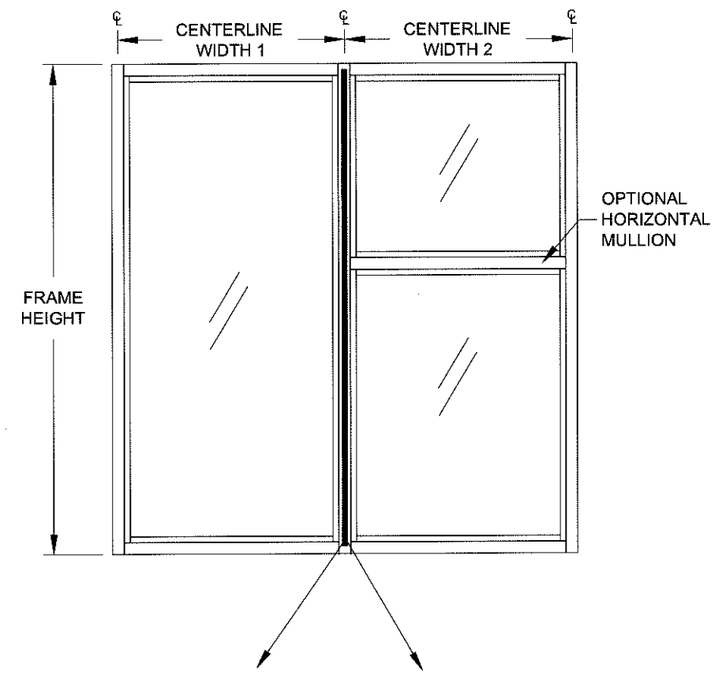

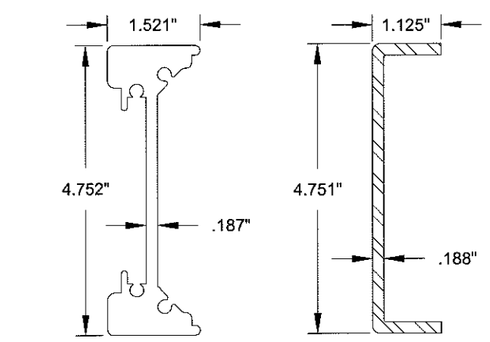

4 ALUMINUM REINFORCEMENT

10 STEEL REINFORCEMENT

NOTES:

1. IF COMBINED WITH ANOTHER ASSEMBLY WITH A SEPARATE APPROVAL, (STOREFRONT ENTRANCE DOOR, PTAC LOUVER OR WINDOW INSERT) THE LESSER DESIGN PRESSURE VALUE OF ANY ASSEMBLY OR THE STOREFRONT WINDOW SHALL BE THE DESIGN PRESSURE FOR THE ENTIRE SYSTEM.

PRODUCT REVISED
as complying with the Florida Building Code
Acceptance No 16-0505.04
Expiration Date Jan. 17, 2018
By Manuel Perez
Miami-Dade Product Control

Rev A

1070 TECHNOLOGY DRIVE
N. VENICE, FL 34275
P.O. BOX 1529
NOKOMIS, FL 34274
(941)-480-1600
CERT. OF AUTH. #29296

Drawn By	Rev.	Date
J ROSOWSKI		03/23/16

Title	DWG No.
TABLE 9	MD-3500-2-LM

Desc.	Sheet	Scale
STOREFRONT WINDOW SYSTEM DETAILS - LM	11 OF 16	NTS

Series
SS-3500

ANTHONY LYNN MILLER
LICENSE
No. 58705
5/2/16
STATE OF FLORIDA
PROFESSIONAL ENGINEER

A. LYNN MILLER, P.E.
P.E.# 58705

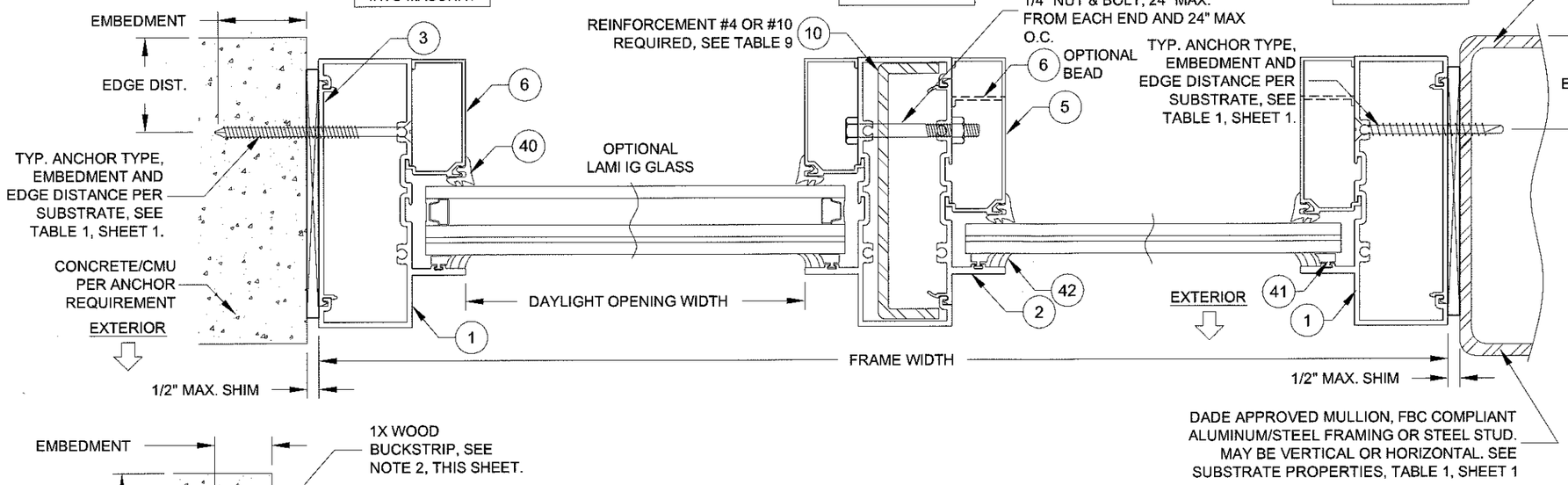

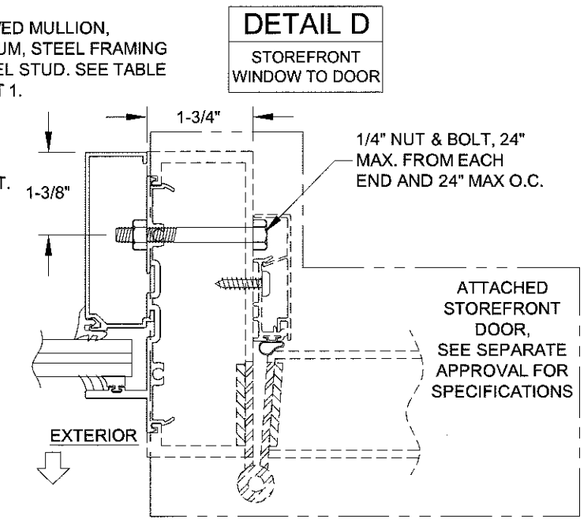

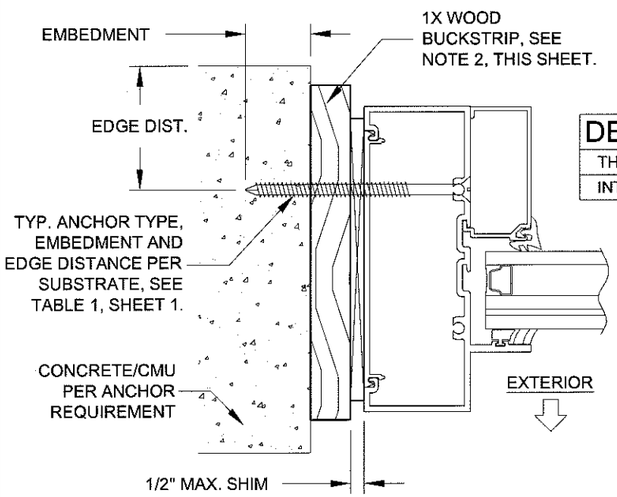

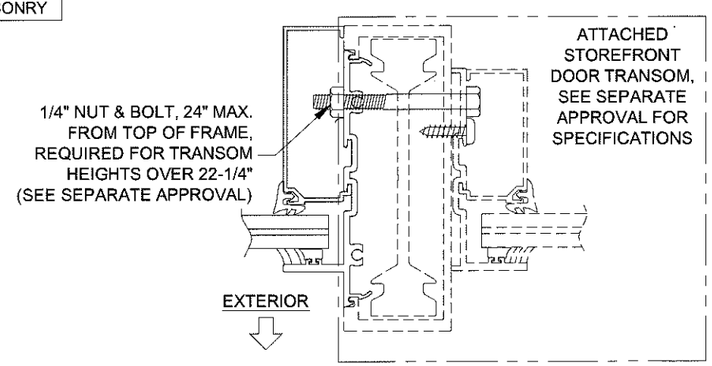

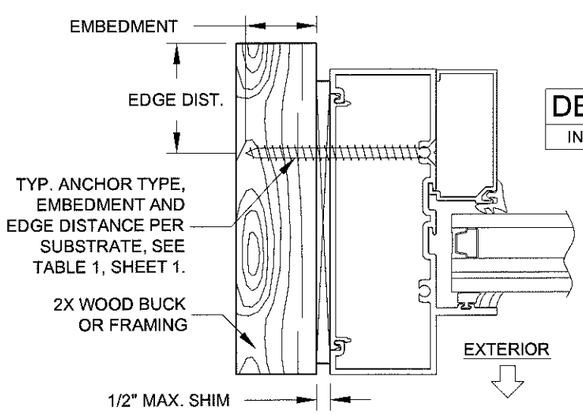

INSTALLATION NOTES:

1. USE ONLY SUBSTRATE APPROPRIATE ANCHORS, FOLLOW EMBEDMENT, EDGE DISTANCE AND SUBSTRATE REQUIREMENTS PER TABLE 1, SHEET 1. ANY INSTALLATION OPTION SHOWN MAY BE USED ON ANY SIDE OF THE WINDOW. ALL ANCHOR HEAD TYPES ARE ALLOWED.

2. ALL WOOD BUCKS LESS THAN 1-1/2" THICK ARE TO BE CONSIDERED 1X INSTALLATIONS. 1X WOOD BUCKS ARE OPTIONAL. UNIT MAY BE INSTALLED DIRECTLY TO SUBSTRATE. WOOD BUCKS DEPICTED AS 2X ARE 1-1/2" THICK OR GREATER. 1X AND 2X BUCKS (WHEN USED) SHALL BE DESIGNED TO PROPERLY TRANSFER LOADS TO THE STRUCTURE. WOOD BUCK DESIGN AND INSTALLATION IS THE RESPONSIBILITY OF THE ENGINEER OR ARCHITECT OF RECORD. MAXIMUM SHIM THICKNESS TO BE AS REQUIRED BY TABLES 3-8, SHEETS 5-10.

PRODUCT REVISED
as complying with the Florida Building Code
Acceptance No 16-0505.04
Expiration Date Jan. 11, 2018
By Manuel Sera
Miami Dade Product Control

ANTHONY LYNN MILLER LICENSE No. 58705 STATE OF FLORIDA PROFESSIONAL ENGINEER
5/2/16
A. LYNN MILLER, P.E.
P.E.# 58705

PGT®
1070 TECHNOLOGY DRIVE
N. VENICE, FL 34275
P.O. BOX 1529
NOKOMIS, FL 34274
CERT. OF AUTH. #29296

Revised By:	Date:	Revision:
Revised By:	Date:	Revision:

Description:	Drawn By:
HORIZONTAL X-SECTION	J ROSOWSKI

Title:	Date:
STOREFRONT WINDOW SYSTEM DETAILS - LM	03/23/16

Series/Model:	Scale:	Sheet:	Drawing No.	Rev:
SS-3500	NTS	12 OF 16	MD-3500-2-LM	

DETAIL F1
THRU 1X WOOD
INTO MASONRY

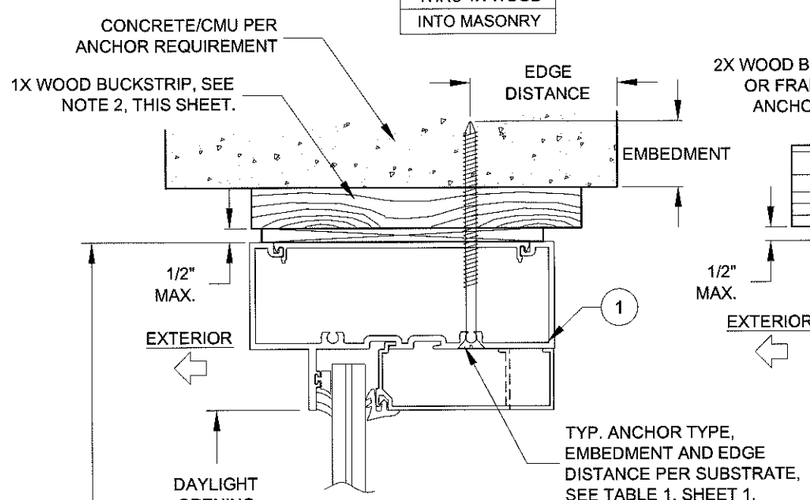

DETAIL F2
INTO WOOD

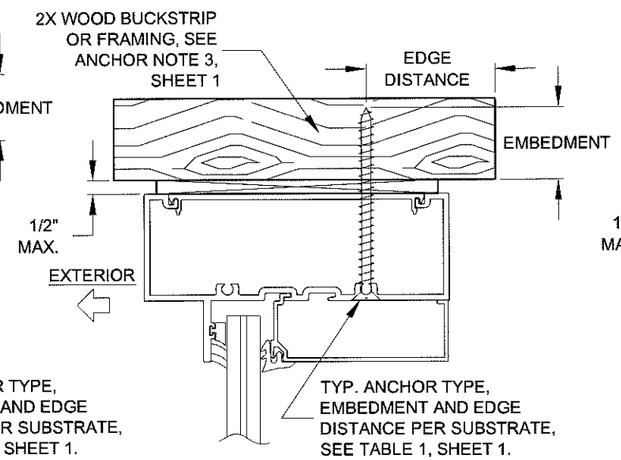

DETAIL F3
INTO MASONRY

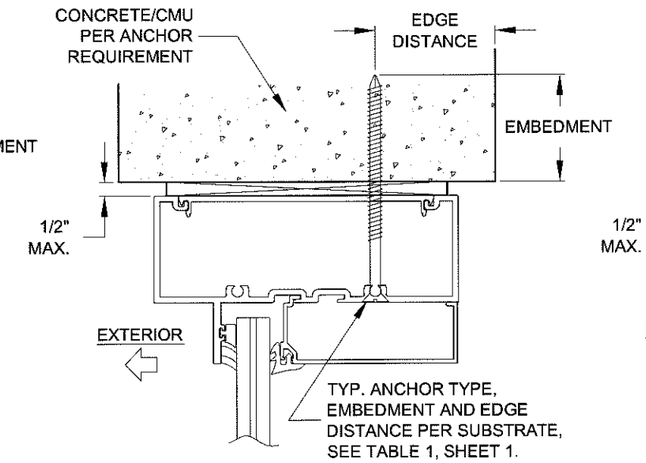

DETAIL F4
INTO METAL

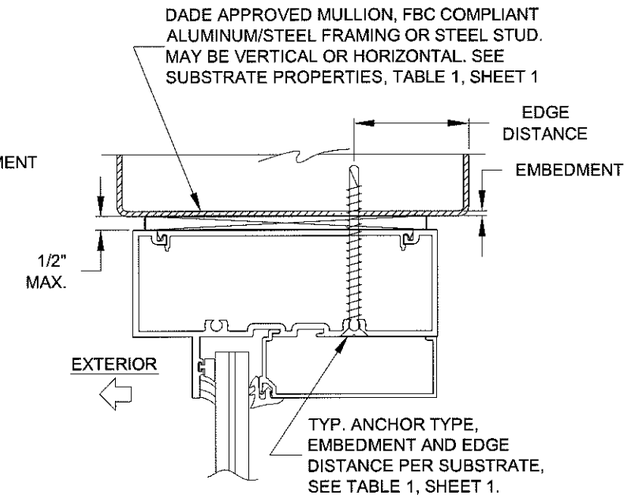

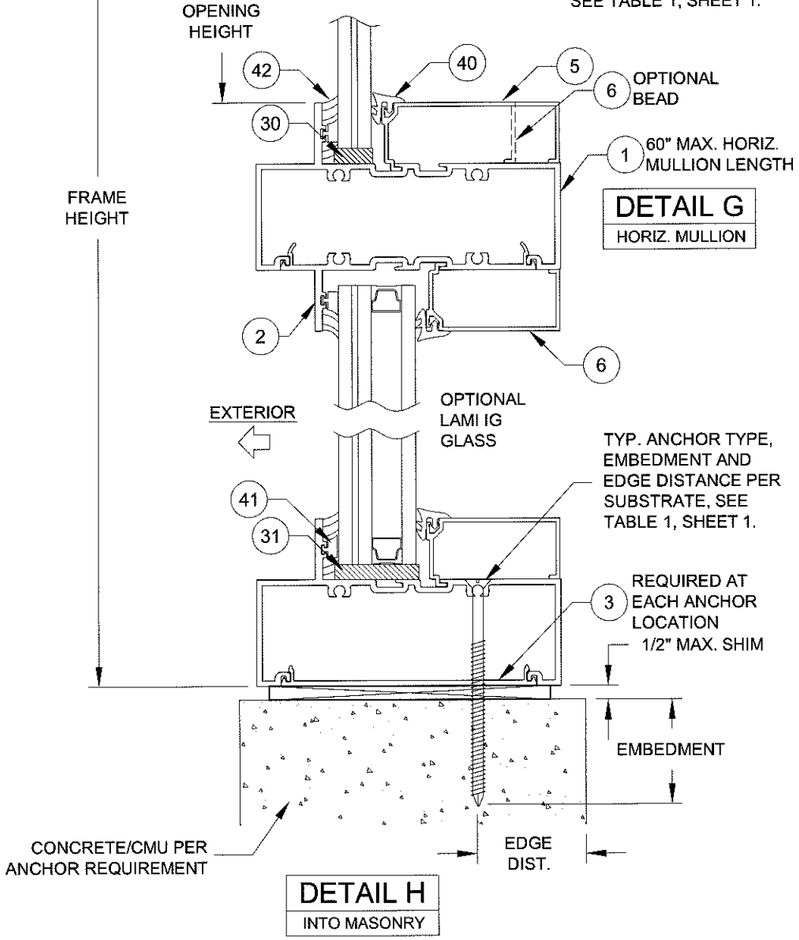

DETAIL G
HORIZ. MULLION

DETAIL H
INTO MASONRY

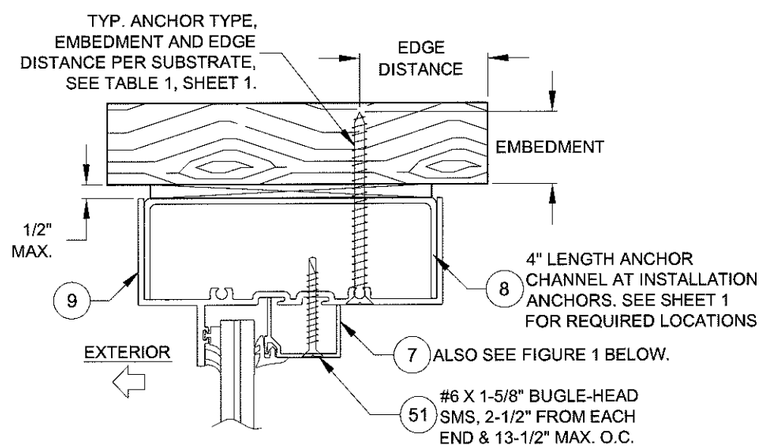

DETAIL I
CURVED HEADER

FIGURE 1:

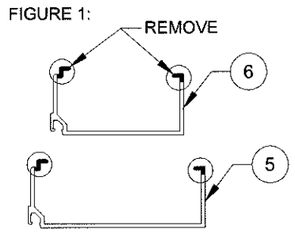

PARTS #5 & #6 MAY ALSO BE USED IF FIELD-MODIFIED AS SHOWN ABOVE.

INSTALLATION NOTES:

1. USE ONLY SUBSTRATE APPROPRIATE ANCHORS, FOLLOW EMBEDMENT, EDGE DISTANCE AND SUBSTRATE REQUIREMENTS PER TABLE 1, SHEET 1. ANY INSTALLATION OPTION SHOWN MAY BE USED ON ANY SIDE OF THE WINDOW. ALL ANCHOR HEAD TYPES ARE ALLOWED.

2. ALL WOOD BUCKS LESS THAN 1-1/2" THICK ARE TO BE CONSIDERED 1X INSTALLATIONS. 1X WOOD BUCKS ARE OPTIONAL. UNIT MAY BE INSTALLED DIRECTLY TO SUBSTRATE. WOOD BUCKS DEPICTED AS 2X ARE 1-1/2" THICK OR GREATER. 1X AND 2X BUCKS (WHEN USED) SHALL BE DESIGNED TO PROPERLY TRANSFER LOADS TO THE STRUCTURE. WOOD BUCK DESIGN AND INSTALLATION IS THE RESPONSIBILITY OF THE ENGINEER OR ARCHITECT OF RECORD. MAXIMUM SHIM THICKNESS TO BE AS REQUIRED BY TABLES 3-8, SHEETS 5-10.

PRODUCT REVISED
is complying with the Florida Building Code
Acceptance No 16-0505.04
Expiration Date Jan. 17, 2018
By Manuel Perez
Miami Dade Product Control

ANTHONY LYNN MILLER LICENSE No. 58705 STATE OF FLORIDA PROFESSIONAL ENGINEER
A.L. 5/2/16
A. LYNN MILLER, P.E.
P.E.# 58705

PGT®
1070 TECHNOLOGY DRIVE
N. VENICE, FL 34275
P.O. BOX 1529
NOKOMIS, FL 34274
CERT. OF AUTH. #29296

Revised By:	Date:	Revision:
Revised By:	Date:	Revision:

Description:	Drawn By:
VERTICAL X-SECTION	J ROSOWSKI

Title:	Date:
STOREFRONT WINDOW SYSTEM DETAILS - LM	03/23/16

Series/Model:	Scale:	Sheet:	Drawing No.	Rev:
SS-3500	NTS	13 OF 16	MD-3500-2-LM	

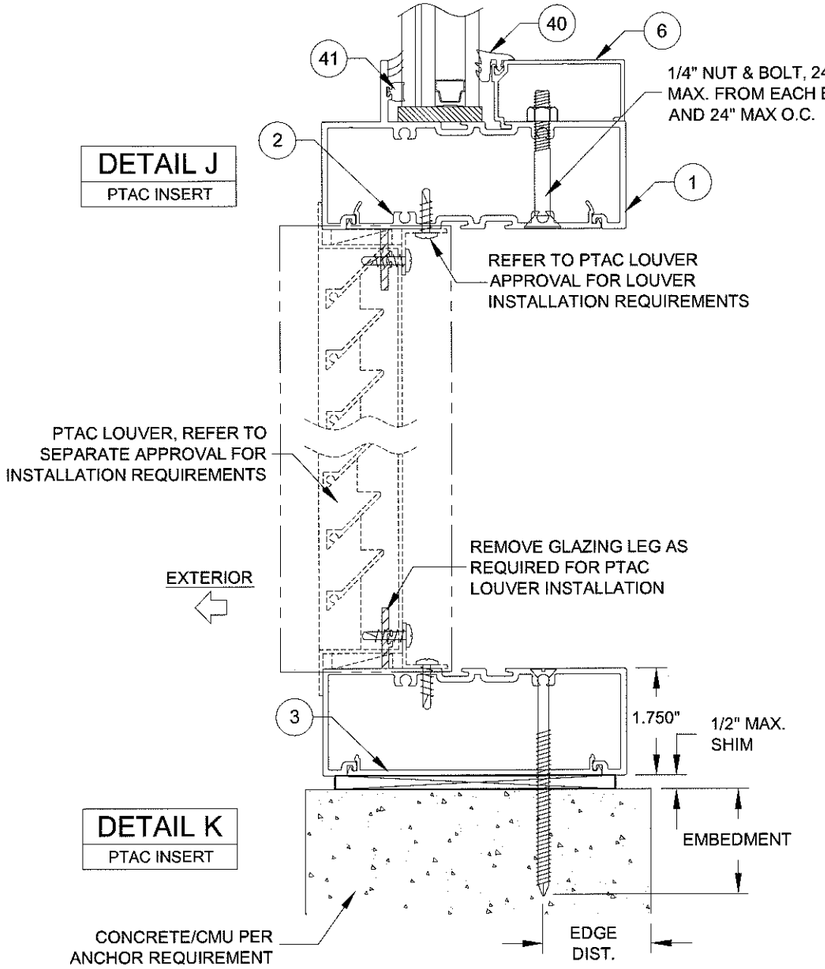

PTAC LOUVER & WINDOW INSERT NOTES:

1. REFER TO SEPARATE WINDOW APPROVAL FOR ALL WINDOW INSERT REQUIREMENTS AND INSTALLATION.
2. AWNING WINDOW INSERT SHOWN BUT MAY BE ANY APPROVED PGT WINDOW WITH A FLANGED FRAME.
3. REFER TO PTAC LOUVER APPROVAL FOR ALL PTAC LOUVER REQUIREMENTS AND INSTALLATION.
4. IF COMBINED WITH ANOTHER ASSEMBLY WITH A SEPARATE APPROVAL, (PTAC LOUVER OR WINDOW INSERT) THE LESSER DESIGN PRESSURE VALUE OF ANY ASSEMBLY OR THE STOREFRONT WINDOW SHALL BE THE DESIGN PRESSURE FOR THE ENTIRE SYSTEM.

INSTALLATION NOTES:

1. USE ONLY SUBSTRATE APPROPRIATE ANCHORS, FOLLOW EMBEDMENT, EDGE DISTANCE AND SUBSTRATE REQUIREMENTS PER TABLE 1, SHEET 1. ANY INSTALLATION OPTION SHOWN MAY BE USED ON ANY SIDE OF THE WINDOW. ALL ANCHOR HEAD TYPES ARE ALLOWED.
2. ALL WOOD BUCKS LESS THAN 1-1/2" THICK ARE TO BE CONSIDERED 1X INSTALLATIONS. 1X WOOD BUCKS ARE OPTIONAL. UNIT MAY BE INSTALLED DIRECTLY TO SUBSTRATE. WOOD BUCKS DEPICTED AS 2X ARE 1-1/2" THICK OR GREATER. 1X AND 2X BUCKS (WHEN USED) SHALL BE DESIGNED TO PROPERLY TRANSFER LOADS TO THE STRUCTURE. WOOD BUCK DESIGN AND INSTALLATION IS THE RESPONSIBILITY OF THE ENGINEER OR ARCHITECT OF RECORD. MAXIMUM SHIM THICKNESS TO BE AS REQUIRED BY TABLES 3-8, SHEETS 5-10.

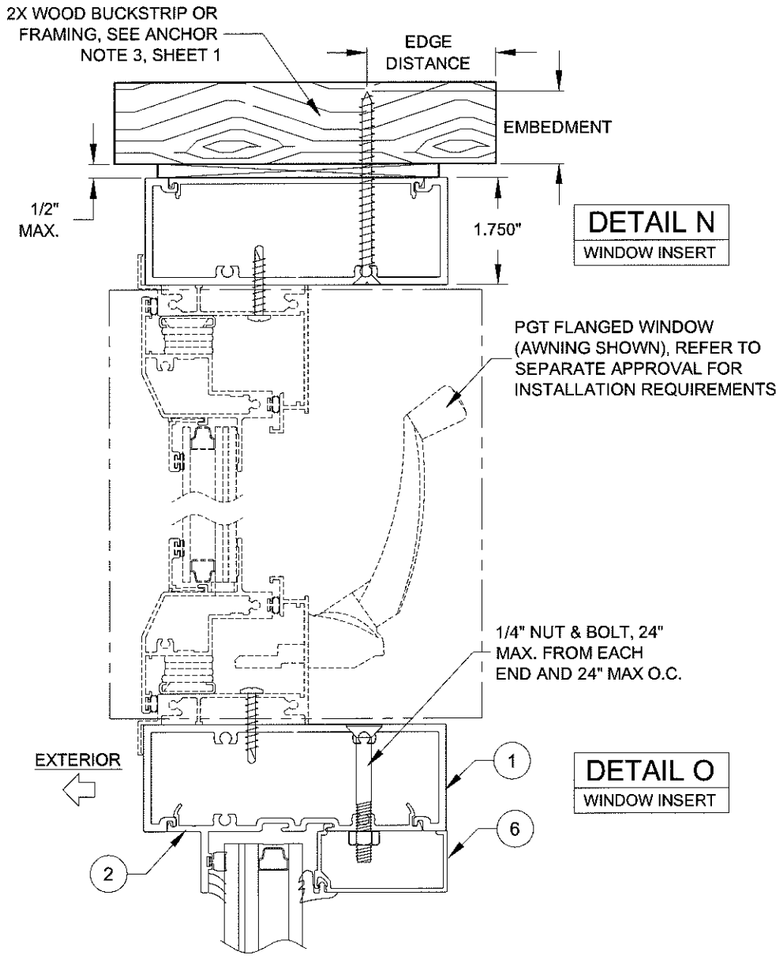

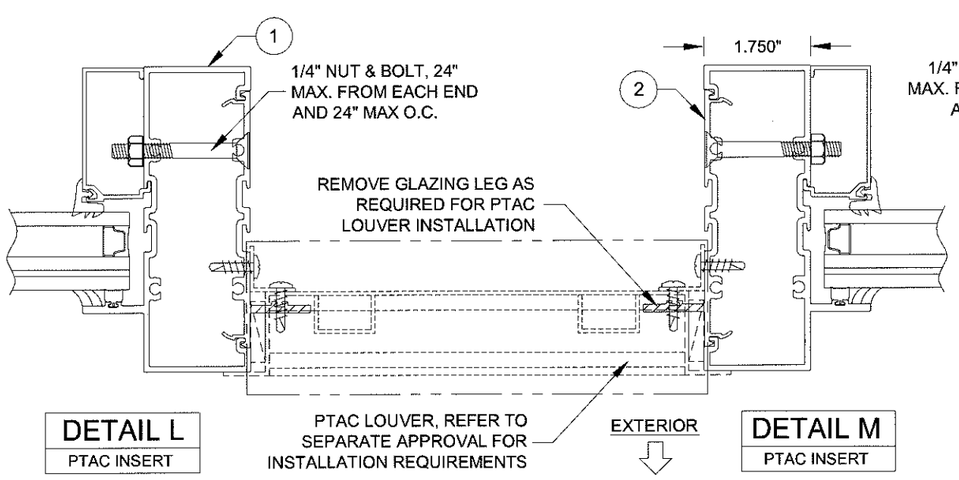

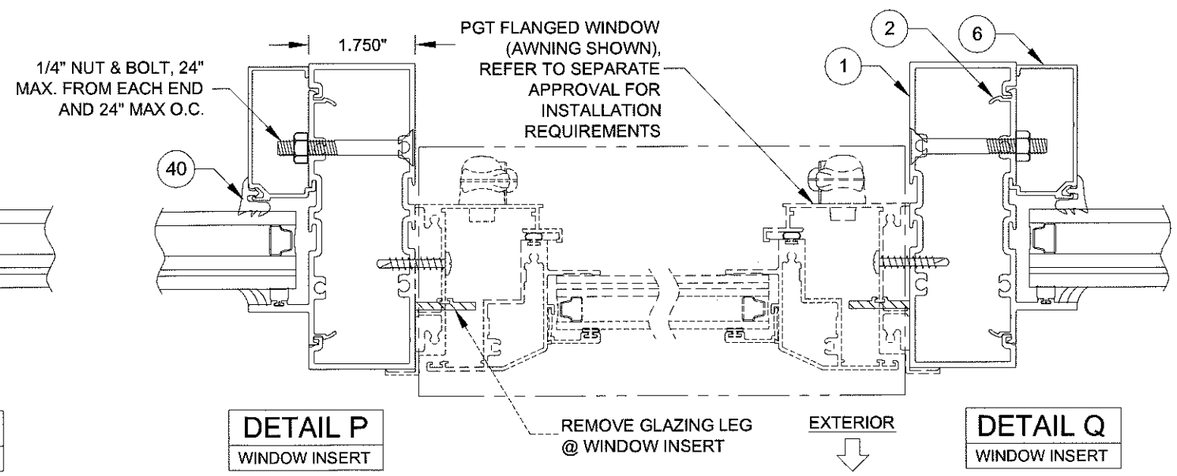

PRODUCT REVISED
as complying with the Florida Building Code
Acceptance No 16-0505.04
Expiration Date Jan. 11, 2018
By Manuel Perez
Miami-Dade Product Control

Rev A

1070 TECHNOLOGY DRIVE
N. VENICE, FL 34275
P.O. BOX 1529
NOKOMIS, FL 34274
(941)-480-1600

CERT. OF AUTH. #29296

Series	Desc.	Title	Scale	Sheet	DWG No.	Rev.	Drawn By	Date
SS-3500	STOREFRONT WINDOW SYSTEM DETAILS - LM	INSERT DETAILS	NTS	14 OF 16	MD-3500-2-LM		J ROSOWSKI	03/23/16

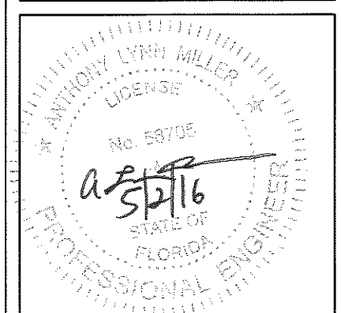

A. LYNN MILLER, P.E.
P.E.# 58705

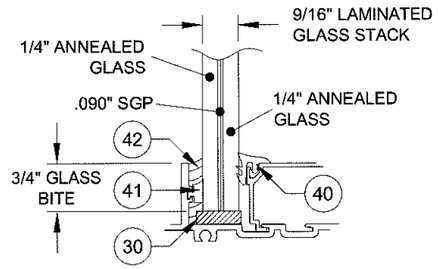

GLASS TYPE A

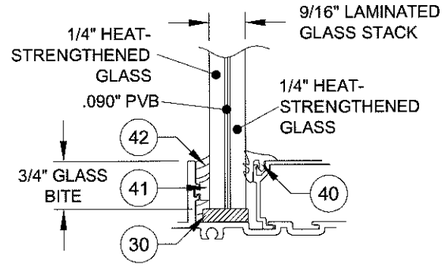

GLASS TYPE B

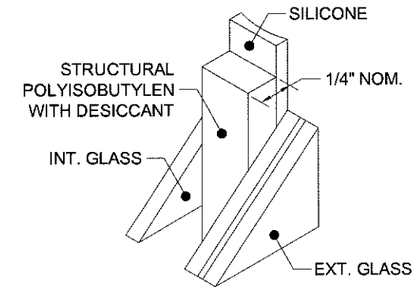

36 KODISPACE® 4SG TPS

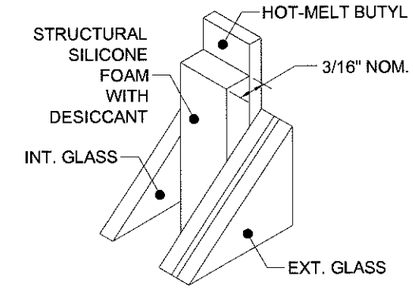

37 SUPER SPACER® NXT ™

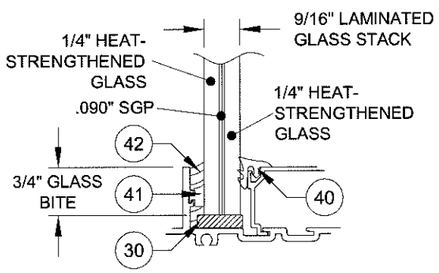

GLASS TYPE C

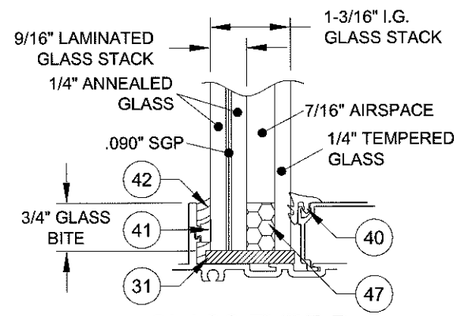

GLASS TYPE D

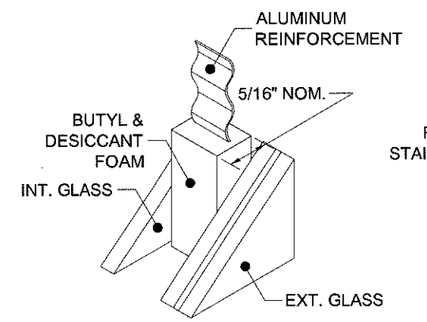

38 DURASEAL® SPACER

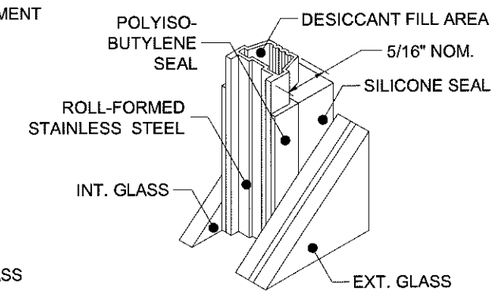

39 XL EDGE™ SPACER

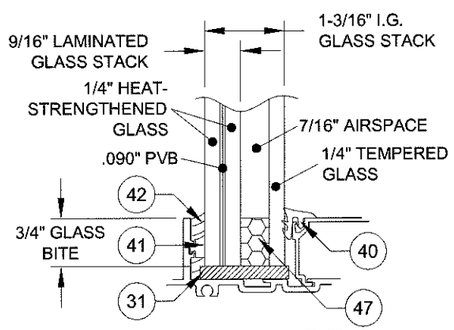

GLASS TYPE E

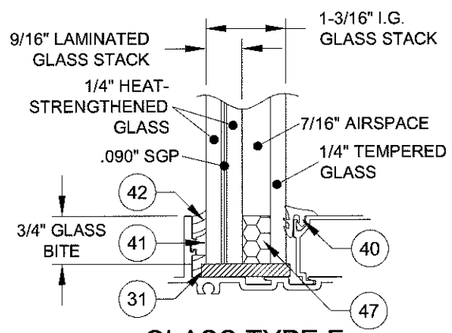

GLASS TYPE F

NOTES:
1. GLAZING FOR ALL GLASS TYPES MEETS ASTM E1300 FOR ALL APPROVED SIZES.

"PVB" = .090" BUTACITE® PVB INTERLAYER BY KURARAY AMERICA, INC.
"SG" = .090" SENTRYGLAS® INTERLAYER BY KURARAY AMERICA, INC.

PRODUCT REVISED
as complying with the Florida Building Code
Acceptance No. 16-0505.04
Expiration Date Jan. 17, 2018
By Manuel Perez
Miami-Dade Product Control

Rev A

1070 TECHNOLOGY DRIVE
N. VENICE, FL 34275
P.O. BOX 1529
NOKOMIS, FL 34274
(941)-480-1600

CERT. OF AUTH. #29296

Drawn By: J ROSOWSKI
Rev.
Date: 03/23/16
DWG No.: MD-3500-2-LM
Sheet: 15 OF 16
Scale: NTS
Series: SS-3500
Desc.: STOREFRONT WINDOW SYSTEM DETAILS - LM
Title: GLAZING DETAILS

ANTHONY LYNN MILLER
LICENSE
No. 58705
STATE OF FLORIDA
PROFESSIONAL ENGINEER
5/2/16

A. LYNN MILLER, P.E.
P.E.# 58705

ASSEMBLY DETAILS

ALL DETAILS SHOWN FROM THE EXTERIOR

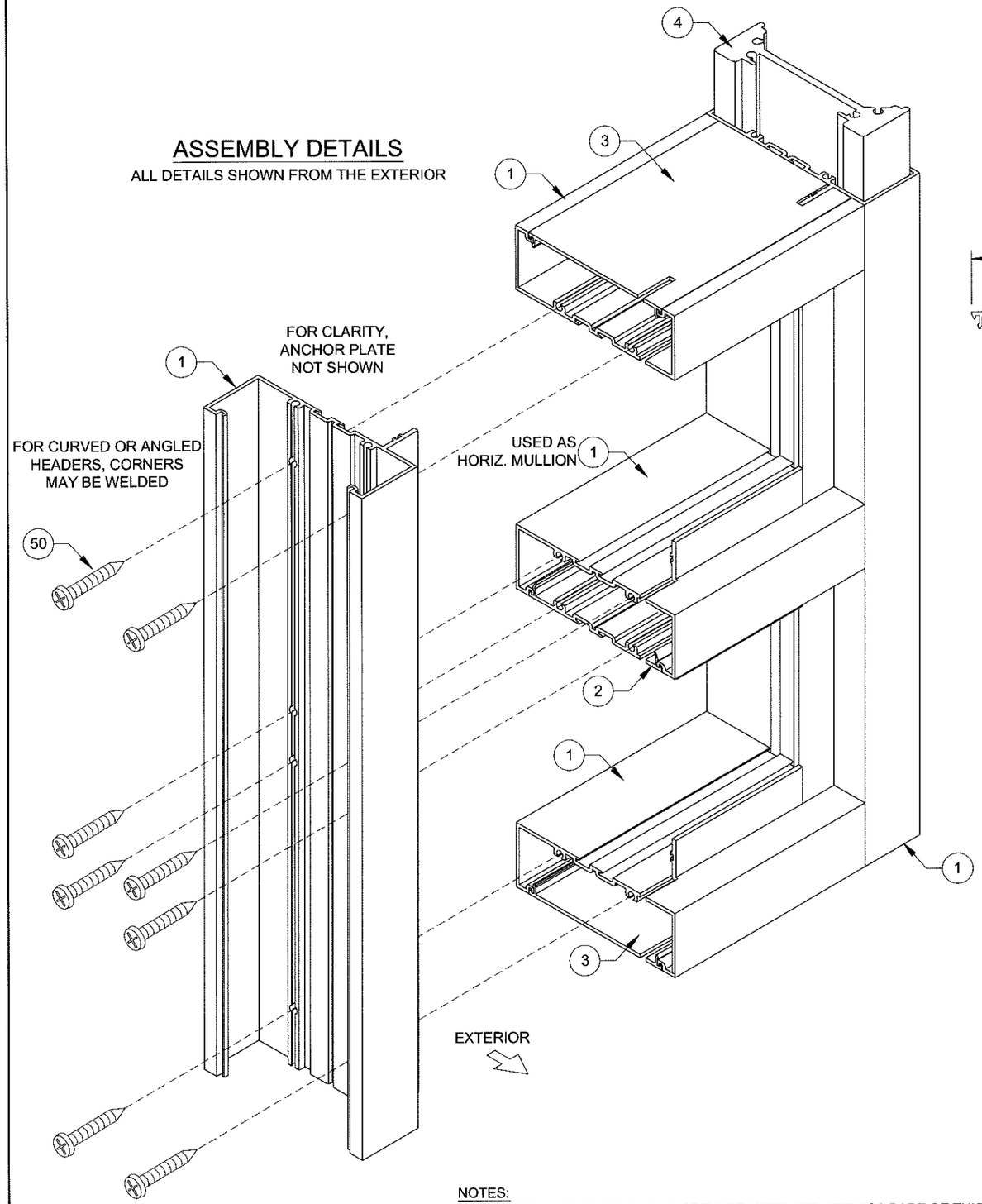

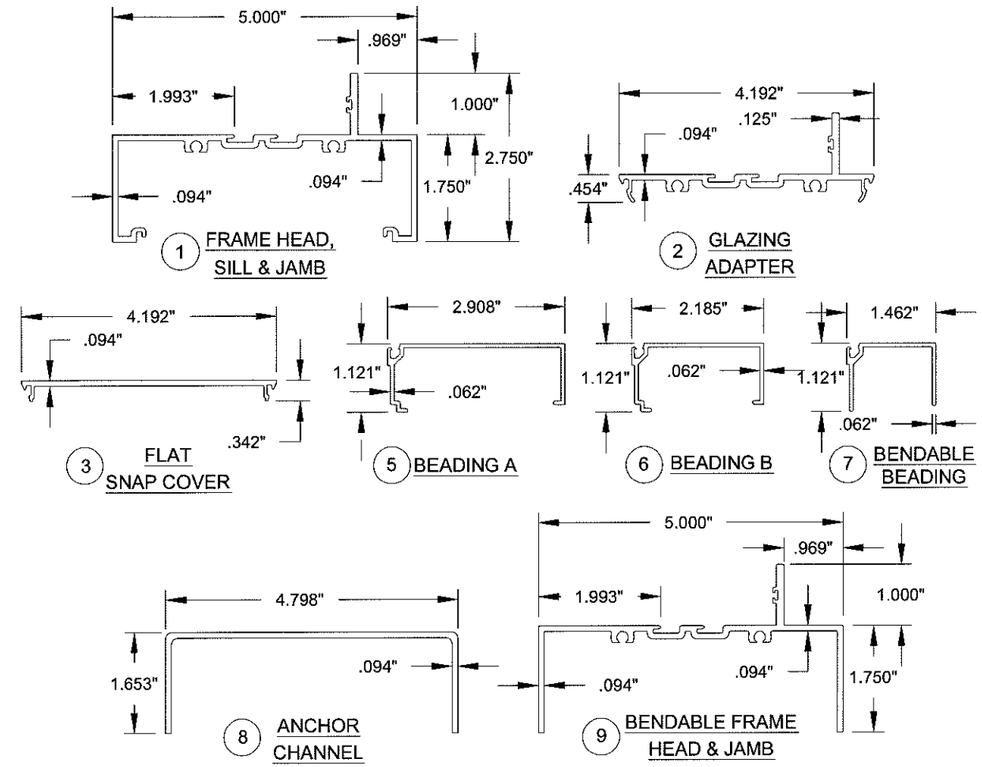

TABLE 10:

Part #	Drawing #	Description	Material
1	19501	Frame Head, Jamb & Sill	6063-T6 Alum.
2	19502	Glazing Adapter	6063-T6 Alum.
3	19505	Flat Snap Cover	6063-T6 Alum.
4	19509	Aluminum Reinforcement	6063-T6 Alum.
5	19503	Beading A	6063-T6 Alum.
6	19504	Beading B	6063-T6 Alum.
7	19573	Bendable Beading	6063-T6 Alum.
8	19571	Anchor Channel	6063-T6 Alum.
9	19572	Bendable Frame Head and Jamb	6063-T6 Alum.
10	19532	Steel Reinforcement	A36 Steel
30	1652	Setting Block 3/16" x 7/16" x 4", Duro = 85 +/-5	EPDM
31	1704	IG Setting Block 3/16" x 1-3/32" x 4", Duro = 85 +/-5	EPDM
36		Kommerling KodiSpace 4SG TPS Spacer System	See Sheet 15 for Materials
37		Quanex Super Spacer nXT with Hot Melt Butyl	
38		Quanex Duraseal	
39		Cardinal XL Edge Spacer	
40	13144	Glazing Gasket, Beading, Duro. = 65 +/-5	EPDM
41	61823	Glazing Gasket, Glazing Leg, Duro. = 80 +/-5	Santoprene
42		Silicone Backbedding: Dow 791, 995, GE7700	
50	712X112	#12 x 1-1/2" Hex Washer Screw, Assembly	Stainless Steel
51	76B58	#6 X 1-5/8" Bugle Head Ph. Screw, for Curved Beading	Stainless Steel

NOTES:
1. PARTS 11-29, 32-35, & 43-49 ARE NOT USED AND ARE NOT PART OF THIS APPROVAL.
2. SEE SHEET 11 FOR PARTS 4 & 10.

PRODUCT REVISED
as complying with the Florida Building Code
Acceptance No 16-0505.04
Expiration Date Jan. 17, 2018
By Manuel Perez
Miami-Dade Product Control

Rev A

1070 TECHNOLOGY DRIVE
N. VENICE, FL 34275
P.O. BOX 1529
NOKOMIS, FL 34274
(941)-480-1600

CERT. OF AUTH. #29296

Drawn By	J ROSOWSKI
Rev.	
Date	03/23/16
DWG No.	MD-3500-2-LM
Sheet	16 OF 16
Scale	NTS
Series	SS-3500
Desc.	STOREFRONT WINDOW SYSTEM DETAILS - LM
Title	BOM & EXTRUSIONS

ANTHONY LYNN MILLER LICENSE No. 58705 STATE OF FLORIDA PROFESSIONAL ENGINEER
5/2/16

A. LYNN MILLER, P.E.
P.E.# 58705