MIAMI-DADE COUNTY
PRODUCT CONTROL SECTION
11805 SW 26 Street, Room 208
Miami, Florida 33175-2474
T (786) 315-2590 F (786) 315-2599
www.miamidade.gov/economy

DEPARTMENT OF REGULATORY AND ECONOMIC RESOURCES (RER)
BOARD AND CODE ADMINISTRATION DIVISION

NOTICE OF ACCEPTANCE (NOA)

The Airolite Company, LLC
P.O. Box 410
Schofield, WI 54476

SCOPE:

This NOA is being issued under the applicable rules and regulations governing the use of construction materials. The documentation submitted has been reviewed and accepted by Miami-Dade County RER - Product Control Section to be used in Miami Dade County and other areas where allowed by the Authority Having Jurisdiction (AHJ).

This NOA shall not be valid after the expiration date stated below. The Miami-Dade County Product Control Section (In Miami Dade County) and/or the AHJ (in areas other than Miami Dade County) reserve the right to have this product or material tested for quality assurance purposes. If this product or material fails to perform in the accepted manner, the manufacturer will incur the expense of such testing and the AHJ may immediately revoke, modify, or suspend the use of such product or material within their jurisdiction. RER reserves the right to revoke this acceptance, if it is determined by Miami-Dade County Product Control Section that this product or material fails to meet the requirements of the applicable building code.

This product is approved as described herein, and has been designed to comply with the Florida Building Code, including the High Velocity Hurricane Zone.

DESCRIPTION: Model SCC901MD Aluminum Louver

APPROVAL DOCUMENT: Drawing No. **SCC901MD**, titled "SCC901MD, Standard and Recessed Jamb ", sheets 1 through 11 of 11, dated 05/23/2016, prepared by the manufacturer, signed and sealed by Chander P. Nangia, P.E., bearing the Miami-Dade County Product Control approval stamp with the NOA number and approval date by the Miami-Dade County Product Control Section.

MISSILE IMPACT RATING: Large and Small Missile Impact Resistant

LABELING: Each unit shall bear a permanent label with the manufacturer's name or logo, Schofield, WI or Frankfort, KY, model/series, and following statement: "Miami-Dade County Product Control Approved", unless otherwise noted herein.

RENEWAL of this NOA shall be considered after a renewal application has been filed and there has been no change in the applicable building code negatively affecting the performance of this product.

TERMINATION of this NOA will occur after the expiration date or if there has been a revision or change in the materials, use, and/or manufacture of the product or process. Misuse of this NOA as an endorsement of any product, for sales, advertising or any other purposes shall automatically terminate this NOA. Failure to comply with any section of this NOA shall be cause for termination and removal of NOA.

ADVERTISEMENT: The NOA number preceded by the words Miami-Dade County, Florida, and followed by the expiration date may be displayed in advertising literature. If any portion of the NOA is displayed, then it shall be done in its entirety.

INSPECTION: A copy of this entire NOA shall be provided to the user by the manufacturer or its distributors and shall be available for inspection at the job site at the request of the Building Official.

This NOA consists of this page 1 and evidence page E-1, as well as approval document mentioned above.

The submitted documentation was reviewed by **Carlos M. Utrera, P.E.**

MIAMI-DADE COUNTY APPROVED

07/25/2016

NOTICE OF ACCEPTANCE: EVIDENCE SUBMITTED

A. DRAWINGS

1. Drawing No. **SCC901MD**, titled "SCC901MD", sheets 1 through 11 of 11, dated 05/23/2016, prepared by the manufacturer, signed and sealed by Chander P. Nangia, P.E.

B. TESTS

1. Test reports on 1) Uniform Static Air Pressure Test, Loading per FBC TAS 202-94
   2) Large Missile Impact Test per FBC, TAS 201-94
   3) Cyclic Wind Pressure Loading per FBC, TAS 203-94

   along with marked-up drawings and installation diagram of Model EHV-901D (Visible/Recessed Jamb) Aluminum Louvers, prepared by Quast Consulting & Testing, Inc, Report No. **QCT16-3863.01,** dated 06/01/2016, signed and sealed by Brian M. Sasman, P.E.
2. Test Report on High Velocity Wind Driven Rain Resistance per AMCA 550-15 (Equivalent to AMCA 550-08/09) of a Model EHV-901D (Standard/Visible Jamb) Aluminum Louver, prepared by Intertek/Architectural Testing, Inc, Test Report No. **F5235.02-801-44,** dated 03/02/2016, signed and sealed by Tyler Westerling, P.E.
3. Test Report on High Velocity Wind Driven Rain Resistance per AMCA 550-15 (Equivalent to AMCA 550-08/09) of a Model EHV-901D (Recessed Jamb) Aluminum Louver, prepared by Intertek/Architectural Testing, Inc, Test Report No. **F5235.03-801-44,** dated 03/02/2016, signed and sealed by Tyler Westerling, P.E.

C. CALCULATIONS

1. Structural load calculations (addendum) prepared by Greenheck Fan Corporation, dated 07/05/2016, signed and sealed by Chander P. Nangia, P.E.
2. Structural load calculations prepared by Greenheck Fan Corporation, dated 05/25/2016, signed and sealed by Chander P. Nangia, P.E.

D. QUALITY ASSURANCE

1. Miami-Dade Department of Regulatory and Economic Resources (RER)

E. MATERIAL CERTIFICATIONS

1. None.

F. STATEMENTS

1. Statement letter of code conformance to the 5th edition (2014) FBC issued by Chander P. Nangia, P.E., dated 05/25/2016, signed and sealed by Chander P. Nangia, P.E.
2. Statement letter of no financial interest issued by Chander P. Nangia, P.E., dated 05/25/2016, signed and sealed by Chander P. Nangia, P.E.
3. Private label agreement dated 01/17/2007.

07/25/2016

Carlos M. Utrera, P.E.
Product Control Examiner
NOA No. 16-0607.12
Expiration Date: July 28, 2021
Approval Date: July 28, 2016

CHANDER P. NANGIA, P.E.
7423 HOLLOW RIDGE DR.
HOUSTON, TX 77095
FLORIDA P.E. # 21938

Approved as complying with the Florida Building Code
Date 01/28/2016
NOAB 16-0607.17
Miami Dade Product Control
By

STRUCTURAL ONLY
CHANDER P. NANGIA
LICENSE
No. 21938
STATE OF FLORIDA
PROFESSIONAL ENGINEER

MAY 25 2016

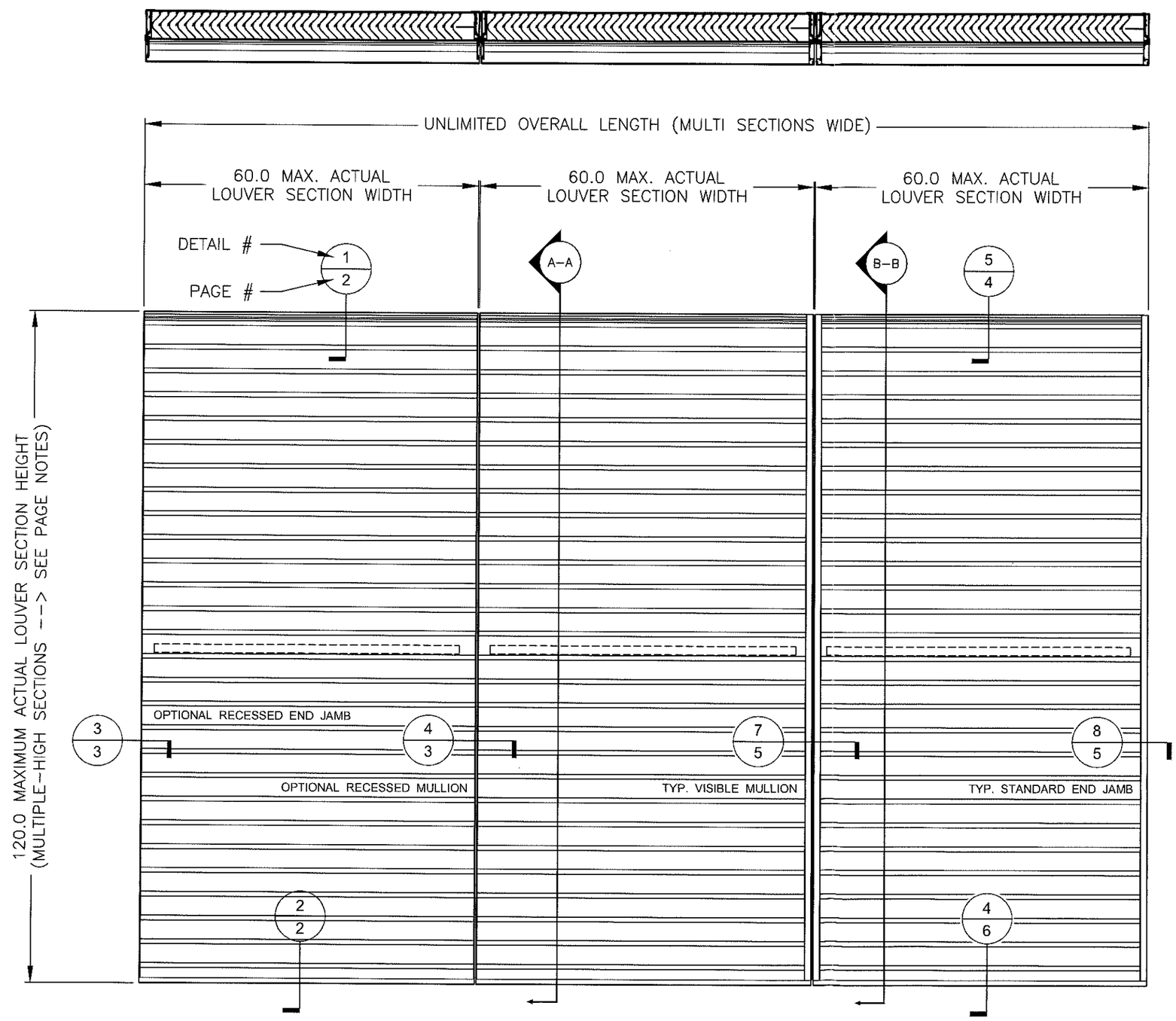

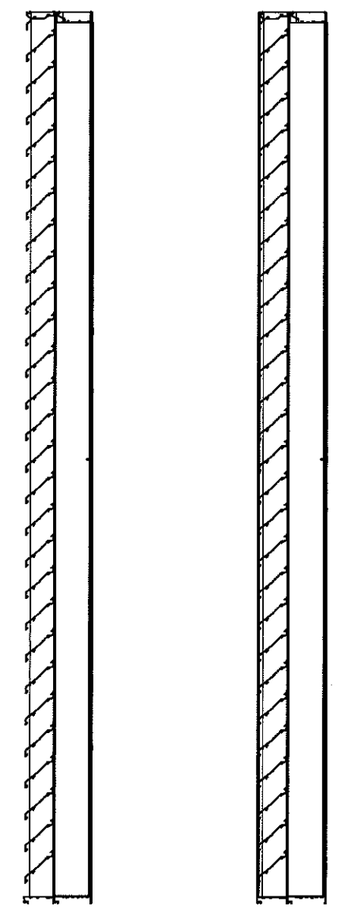

A–A: OPTIONAL RECESSED JAMB

B–B: STANDARD VISIBLE JAMB

PAGE NOTES:
- MULTI–HIGH ASSEMBLIES ARE PERMITTED AS–LONG–AS EACH LOUVER SECTION HAS SUITABLE SUBSTRATES ABOVE AND/OR BELOW EACH LOUVER SECTION ASSEMBLY AND EACH LOUVER SECTION IS INSTALLED PER DETAILS HEREIN (REFERENCE PAGES 2 & 4 OF 11).

AIROLITE
The look that works™
SCHOFIELD, WISCONSIN 54476
715 841 8757

TITLE: SCC901MD, ELEVATION

DRAWN BY	NAH
DATE	5/23/2016
SCALE	1:10
SHEET NO.	1 OF 11
CAD DRAWING NO.	SCC901MD

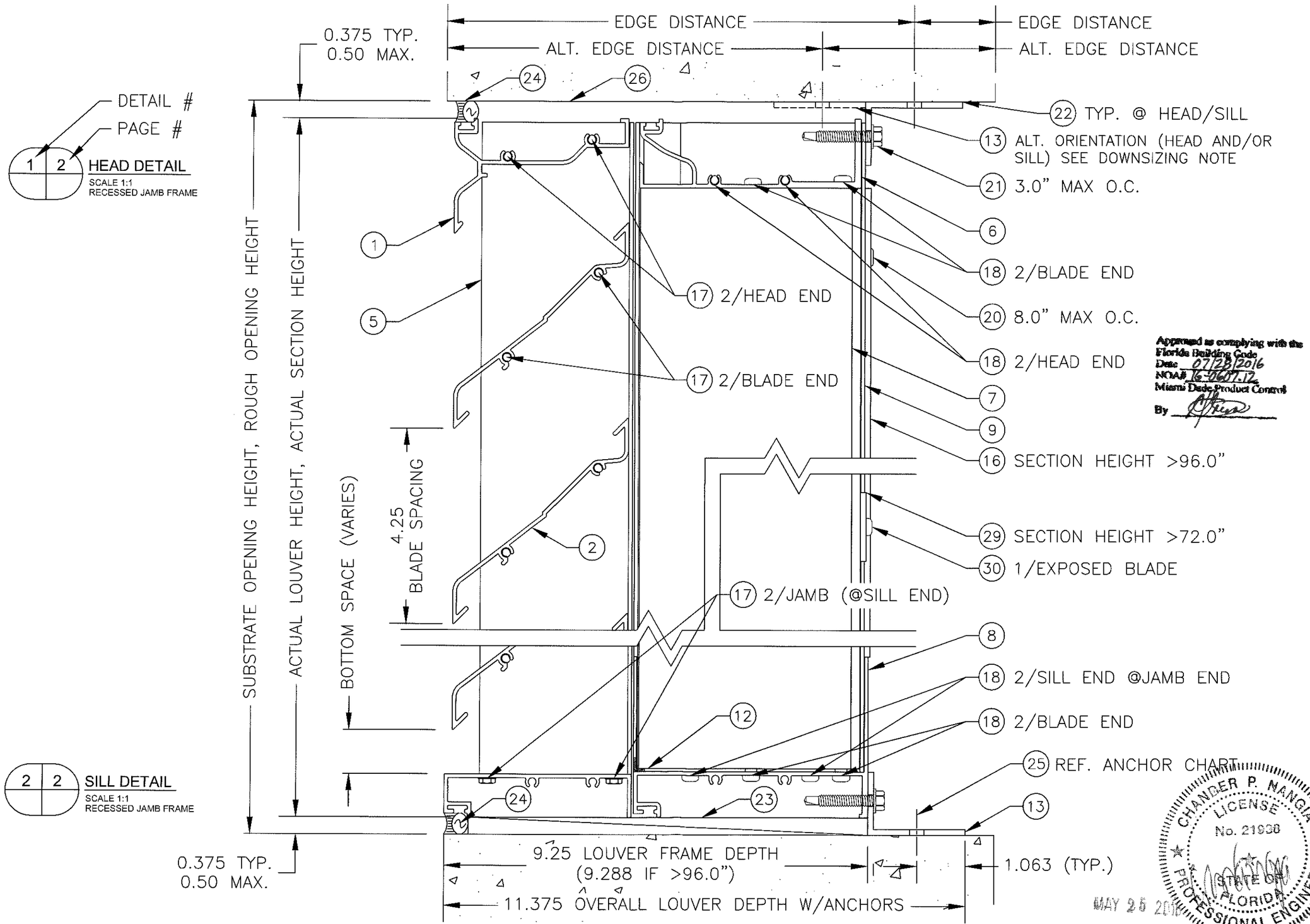

Approved as complying with the Florida Building Code
Date 07/28/2016
NOA# 16-0607.12
Miami Dade Product Control
By

CHANDER P. MANGIA
LICENSE
No. 21938
STATE OF FLORIDA
PROFESSIONAL ENGINEER

MAY 25 2016

- STANDARD LOUVER HEIGHT DOWNSIZING IS 0.375 PER END (0.750 OVERALL TOTAL) WHEN ORDERED BASED ON ROUGH OPENING SIZING.
- MULTI-HIGH ASSEMBLIES ARE PERMITTED AS-LONG-AS EACH LOUVER SECTION'S WIDTH/HEIGHT ARE WITHIN THE ALLOWABLE MAXIMUMS AND SUITABLE SUBSTRATES SURROUNDS EACH LOUVER SECTION ASSEMBLY PERIMETER AND EACH LOUVER SECTION IS INSTALLED PER DETAILS.

AIROLITE
The look that works™
SCHOFIELD, WISCONSIN 54476
715 841 8757

TITLE: SCC901MD, RECESSED JAMB, HEAD & SILL DETAILS

DRAWN BY	DATE	SHEET NO.	CAD DRAWING NO.
NAH	5/23/2016	2 OF 11	SCC901MD
SCALE 1:1			

PAGE NOTES

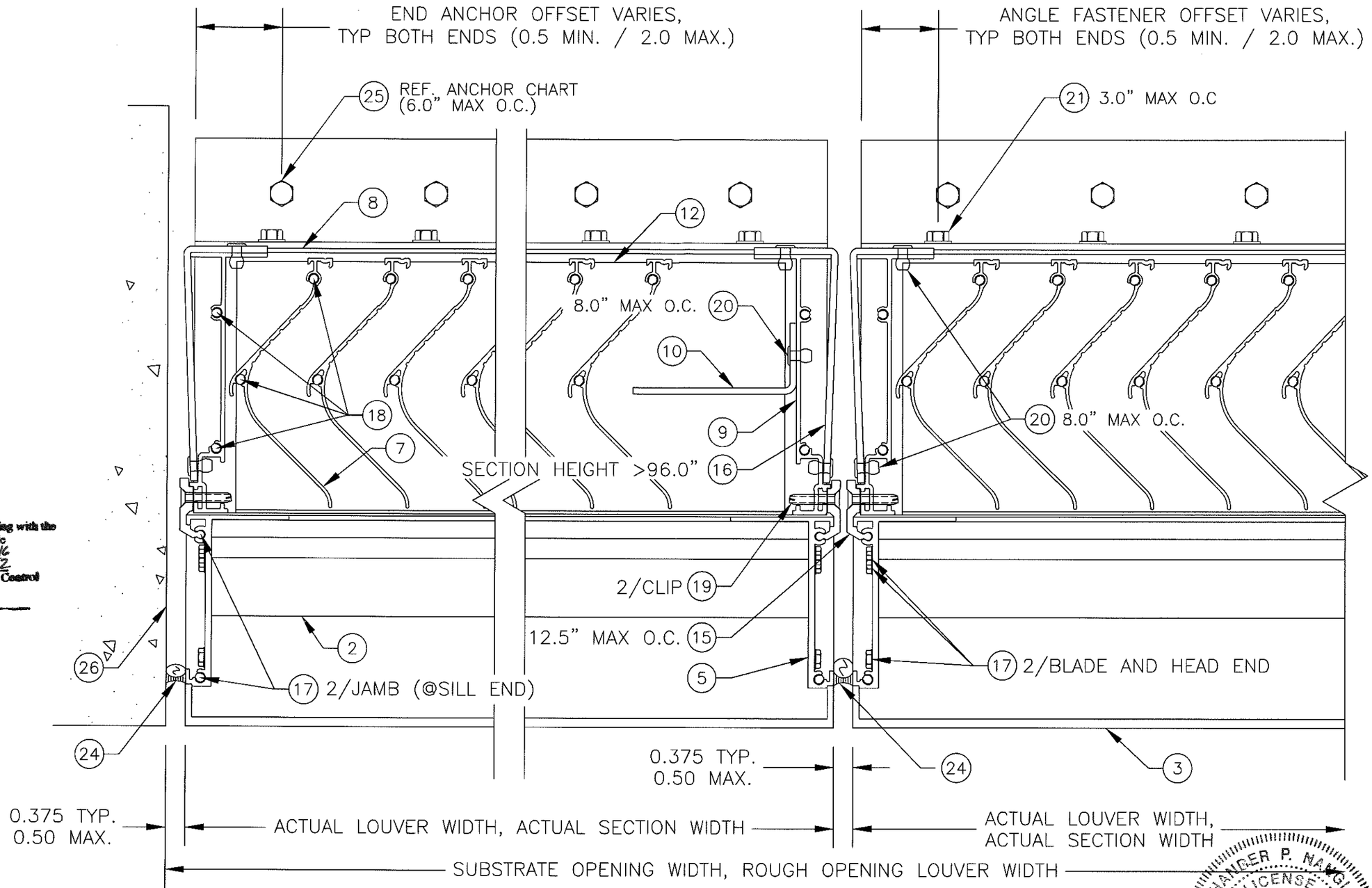

Approved as complying with the
Florida Building Code
Date 07/28/2016
NOAB 16-0607.12
Miami Dade Product Control
By

3 | 3 JAMB DETAIL
SCALE 1:1
RECESSED JAMB FRAME

4 | 3 MULLION DETAIL
SCALE 1:1
RECESSED JAMB FRAME

CHANDER P. MANGIA
LICENSE
No. 21938
STATE OF FLORIDA
PROFESSIONAL ENGINEER

MAY 25 2016

PAGE NOTES:

- STANDARD LOUVER WIDTH DOWNSIZING IS 0.375 PER END (0.750 OVERALL TOTAL) WHEN ORDERED BASED ON ROUGH OPENING SIZING.

DRAWN BY NAH
DATE 5/23/2016
SCALE 1:1
SHEET NO. 3 OF 11
CAD DRAWING NO. SCC901MD

AIROLITE
The look that works™
SCHOFIELD, WISCONSIN 54476
715 841 8757

TITLE: SCC901MD, RECESSED JAMB, JAMB & MULLION DETAILS

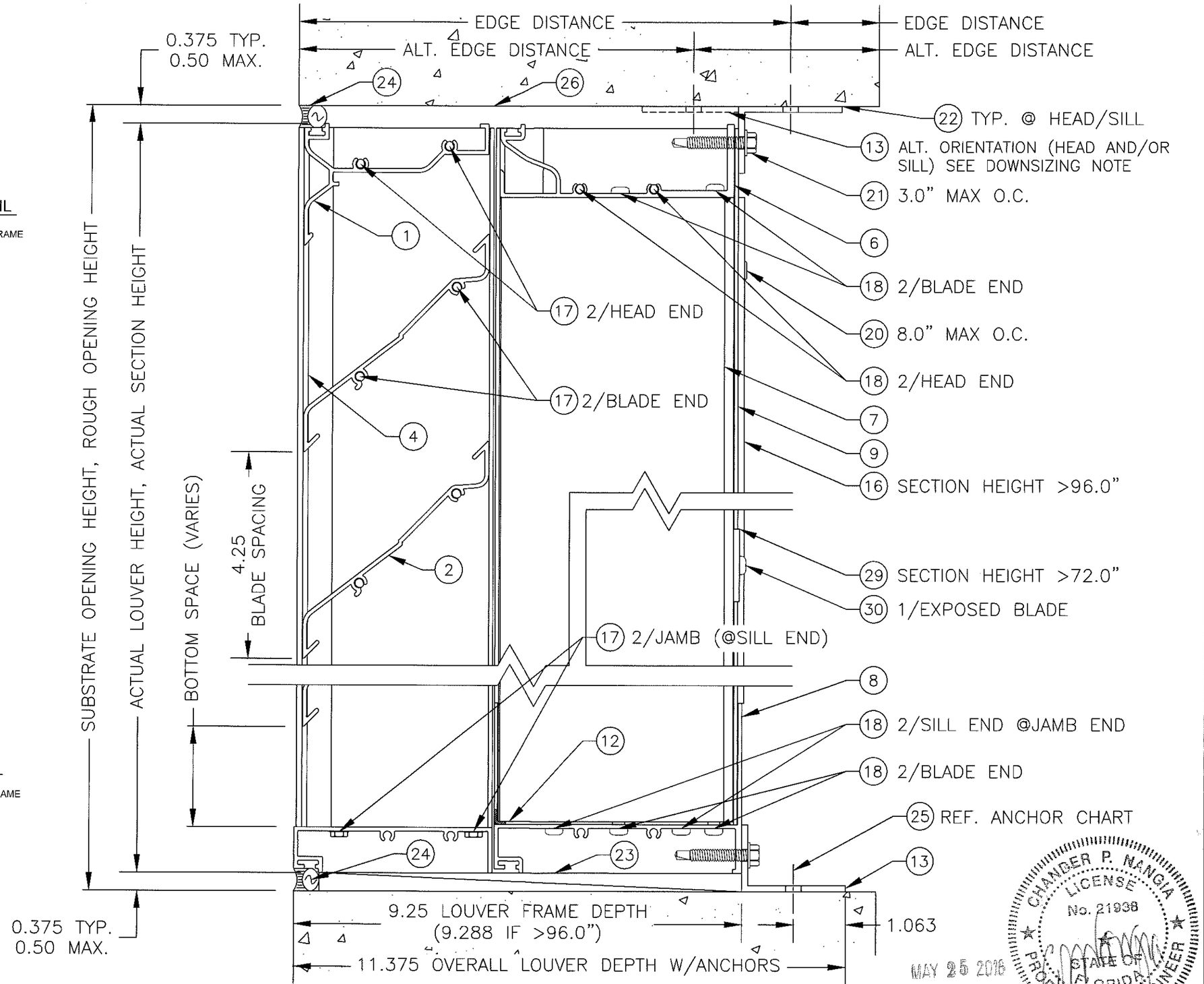

5 | 4 **HEAD DETAIL**
SCALE 1:1
STANDARD JAMB FRAME

6 | 4 **SILL DETAIL**
SCALE 1:1
STANDARD JAMB FRAME

Approved as complying with the Florida Building Code
Date 07/28/2016
NOA# 16-0607.12
Miami Dade Product Control
By

MAY 25 2016

CHANDER P. NANGIA
LICENSE
No. 21938
STATE OF FLORIDA
PROFESSIONAL ENGINEER

DRAWN BY NAH	DATE 5/23/2016
SCALE 1:1	SHEET NO. 4 OF 11
	CAD DRAWING NO. SCC901MD

AIROLITE
The look that works.™
SCHOFIELD, WISCONSIN 54476
715 841 8757

TITLE: SCC901MD, STANDARD JAMB, HEAD & SILL DETAILS

PAGE NOTES:

- STANDARD LOUVER HEIGHT DOWNSIZING IS 0.375 PER END (0.750 OVERALL TOTAL) WHEN ORDERED BASED ON ROUGH OPENING SIZING.
- MULTI-HIGH ASSEMBLIES ARE PERMITTED AS-LONG-AS EACH LOUVER SECTION'S WIDTH/HEIGHT ARE WITHIN THE ALLOWABLE MAXIMUMS AND SUITABLE SUBSTRATES SURROUNDS EACH LOUVER SECTION ASSEMBLY PERIMETER AND EACH LOUVER SECTION IS INSTALLED PER DETAILS.

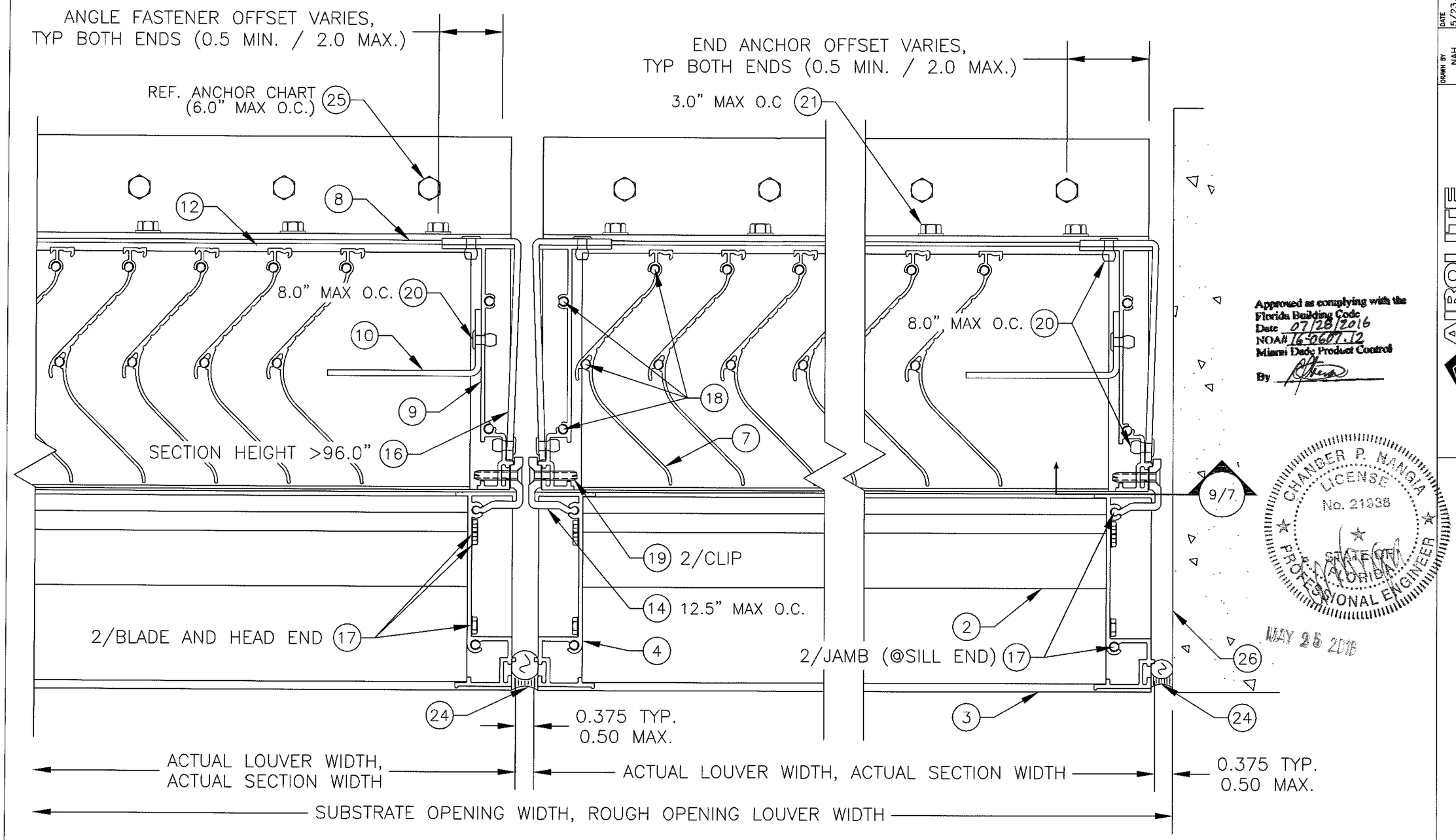

7 5 **MULLION DETAIL**
SCALE 1:1
STANDARD JAMB FRAME

8 5 **JAMB DETAIL**
SCALE 1:1
STANDARD JAMB FRAME

Approved as complying with the
Florida Building Code
Date 07/28/2016
NOA# 16-0607.12
Miami Dade Product Control
By

CHANDER P. NANGIA
LICENSE
No. 21938
STATE OF FLORIDA
PROFESSIONAL ENGINEER
MAY 25 2016

AIROLITE
The look that works™
SCHOFIELD, WISCONSIN 54476
715 841 8757

DRAWN BY NAH	DATE 5/23/2016
SCALE 1:1	
SHEET NO. 5 OF 11	
CAD DRAWING NO. SCC901MD	

TITLE: SCC901MD, STANDARD JAMB, JAMB & MULLION DETAILS

PAGE NOTES:

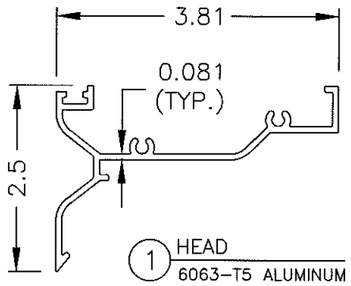

1 HEAD
6063–T5 ALUMINUM

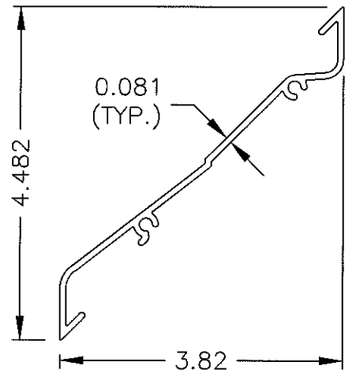

2 BLADE
6063–T5 ALUMINUM

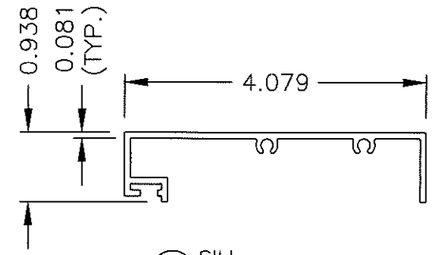

3 SILL
6063–T5 ALUMINUM

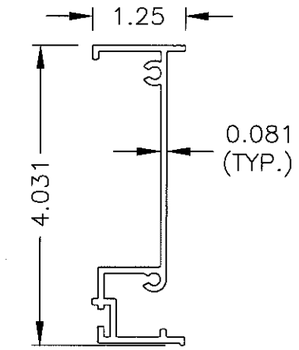

4 JAMB (STANDARD)
6063–T5 ALUMINUM

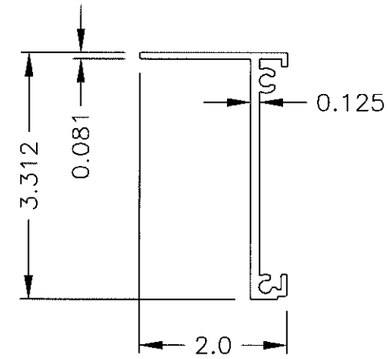

5 JAMB (RECESSED)
6063–T5 ALUMINUM

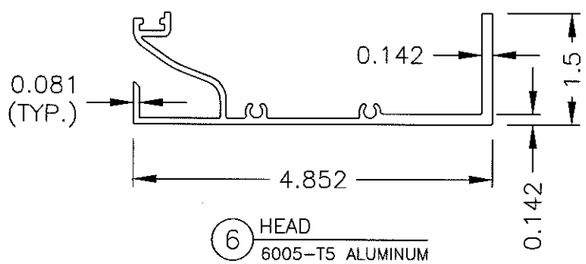

6 HEAD
6005–T5 ALUMINUM

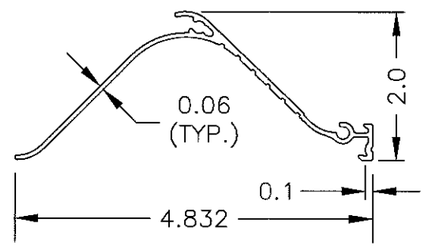

7 BLADE
6063–T5 ALUMINUM

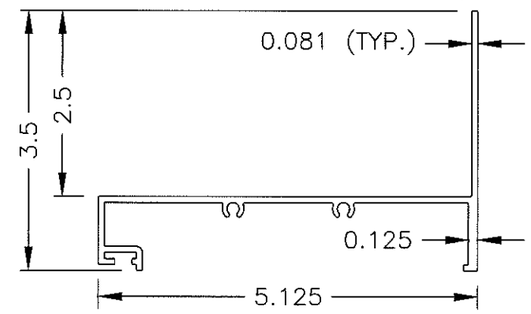

8 SILL
6005–T5 ALUMINUM

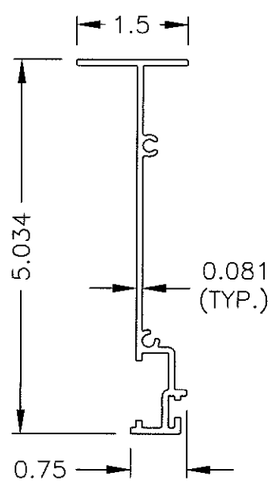

9 JAMB
6063–T5 ALUMINUM

Approved as complying with the
Florida Building Code
Date 07/28/2016
NOA# 16-0607.12
Miami Dade Product Control
By

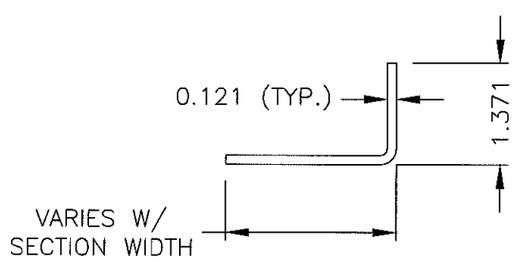

10 JAMB BLANKOFF ANGLE
5052–H32 ALUMINUM SHEET

CHANDER P. NANGIA PE.
7423 HOLLOW RIDGE DR.
HOUSTON, TX 77095
FLORIDA PE # 21938

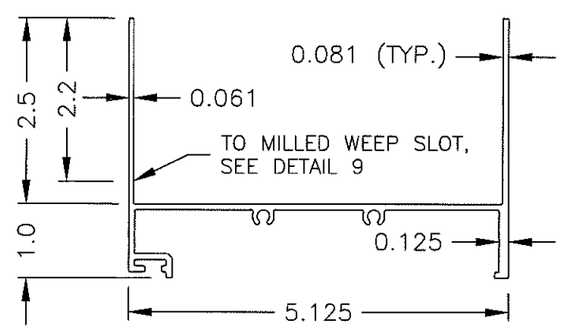

11 COMBO SILL W/BAFFLE
6005–T5 ALUMINUM

CHANDER P. NANGIA
LICENSE
No. 21938
STATE OF
FLORIDA
PROFESSIONAL ENGINEER
JUL 18 2016

REVISION	BY	DATE	SYM
REVISED PAGE NOTE DOWNSIZING VALUES REMOVED PAGE NOTE STRAP REFERENCE	MES	7/18 2016	1

PAGE NOTES:

- STANDARD LOUVER WIDTH DOWNSIZING IS 0.375 PER END (0.750 OVERALL TOTAL) WHEN ORDERED BASED ON ROUGH OPENING SIZING. 1

DRAWN BY NAH
DATE 5/23/2016
SCALE 1:1
SHEET NO. 6 OF 11
CAD DRAWING NO. SCC901MD

AIROLITE
The look that works™
SCHOFIELD, WISCONSIN 54476
715 841 8757

TITLE: SCC901MD, PART PROFILES

REVISION	BY	DATE	SYM
ADDED ITEM 29 REVISED PAGE NOTE STRAP REFERENCE	MES	7/18 2016	1

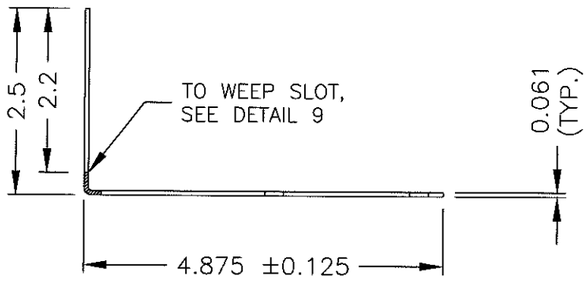

12 SILL BAFFLE
5052–H32 ALUMINUM SHEET OR 6063–T5 ALUM.

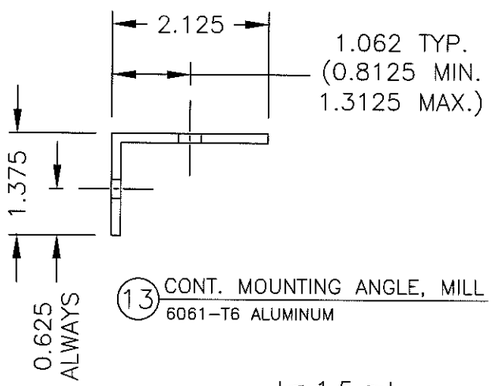

13 CONT. MOUNTING ANGLE, MILL
6061–T6 ALUMINUM

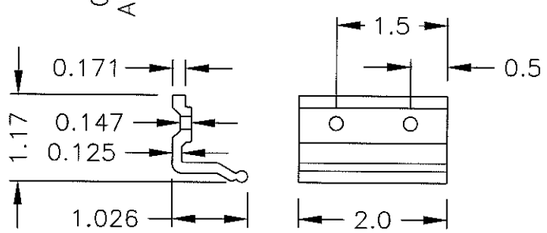

14 STANDARD LOUVER JAMB CLIP, MILL
6061–T6 ALUMINUM

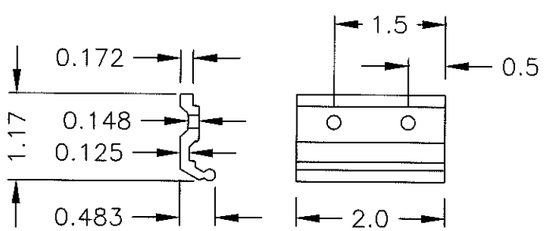

15 RECESSED LOUVER JAMB CLIP, MILL
6061–T6 ALUMINUM

9 | 7 SILL BAFFLE LAYOUT DETAIL
SCALE 1:1
TYPICAL ITEMS 8 AND 11

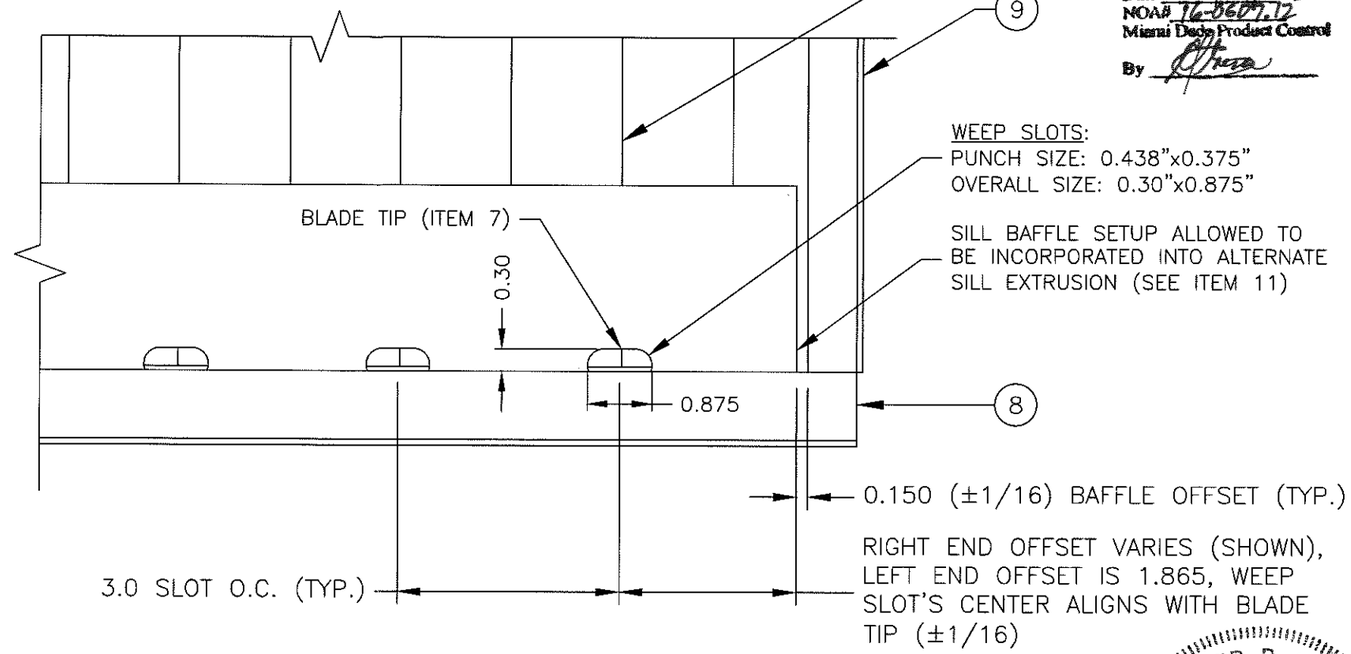

Approved as complying with the Florida Building Code
Date 07/28/2016
NOA# 16-0607.17
Miami Dade Product Control
By

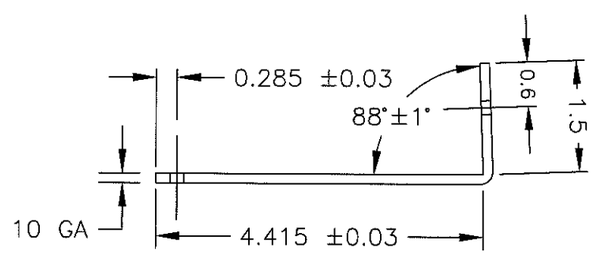

16 JAMB REINFORCEMENT ANGLE, MILL
300 SERIES STAINLESS STEEL, ONLY WHEN SECTION HEIGHT > 96.0

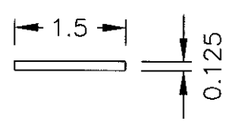

1 29 BLADE SUPPORT STRAP (SEE PAGE NOTES)
ALLOY VARIES, ALUMINUM WHEN SECTION HEIGHT > 72.0

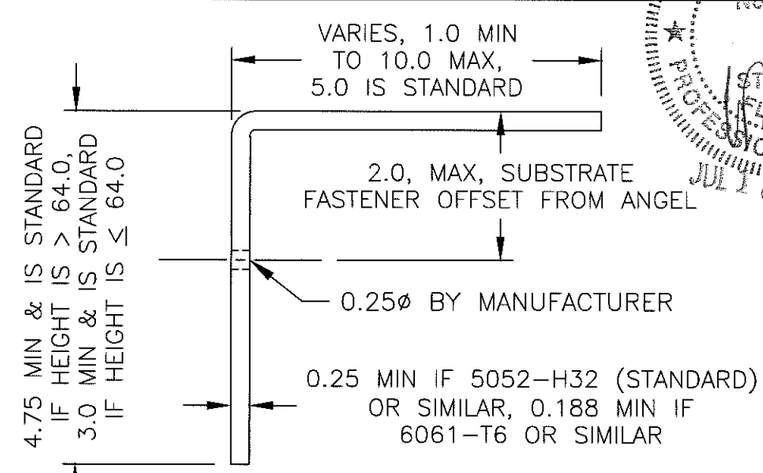

32 SECONDARY CONTINUOUS MOUNTING ANGLE, MILL FINISH
0.188 6061–T6 OR 0.25 5052–H32 ALUMINUM

CHANDER P. NANGIA
LICENSE
No. 21038
STATE OF FLORIDA
PROFESSIONAL ENGINEER
JUL 18 2016

AIROLITE
The look that works™
SCHOFIELD, WISCONSIN 54476
715 841 8757

DRAWN BY	DATE	SHEET NO.	CAD DRAWING NO.
NAH	5/23/2016	7 OF 11	SCC901MD
SCALE 1:1			

TITLE: SCC901MD, PART PROFILES & SILL BAFFLE DETAIL

PAGE NOTES:

- ITEM 29 STRAP IS NOT REQUIRED FOR NOA. PER MANUFACTURER, ITEM 29 STRAP IS NOT REQUIRED TO PASS AMCA 540 IMPACT LEVEL D (50 ft/s), BUT IS REQUIRED TO PASS AMCA 540 IMPACT LEVEL E (80 ft/s). MIAMI–DADE COUNTY DEPT. OF R.E.R. DOES NOT CURRENTLY EVALUATE OR ENDORSE AMCA 540 PERFORMANCE. 1
- ALL SHEET METAL PARTS ARE SHOWN AT ACTUAL THICKNESS

10 | 8

FACTORY SEALING DETAIL

STANDARD VISIBLE JAMB

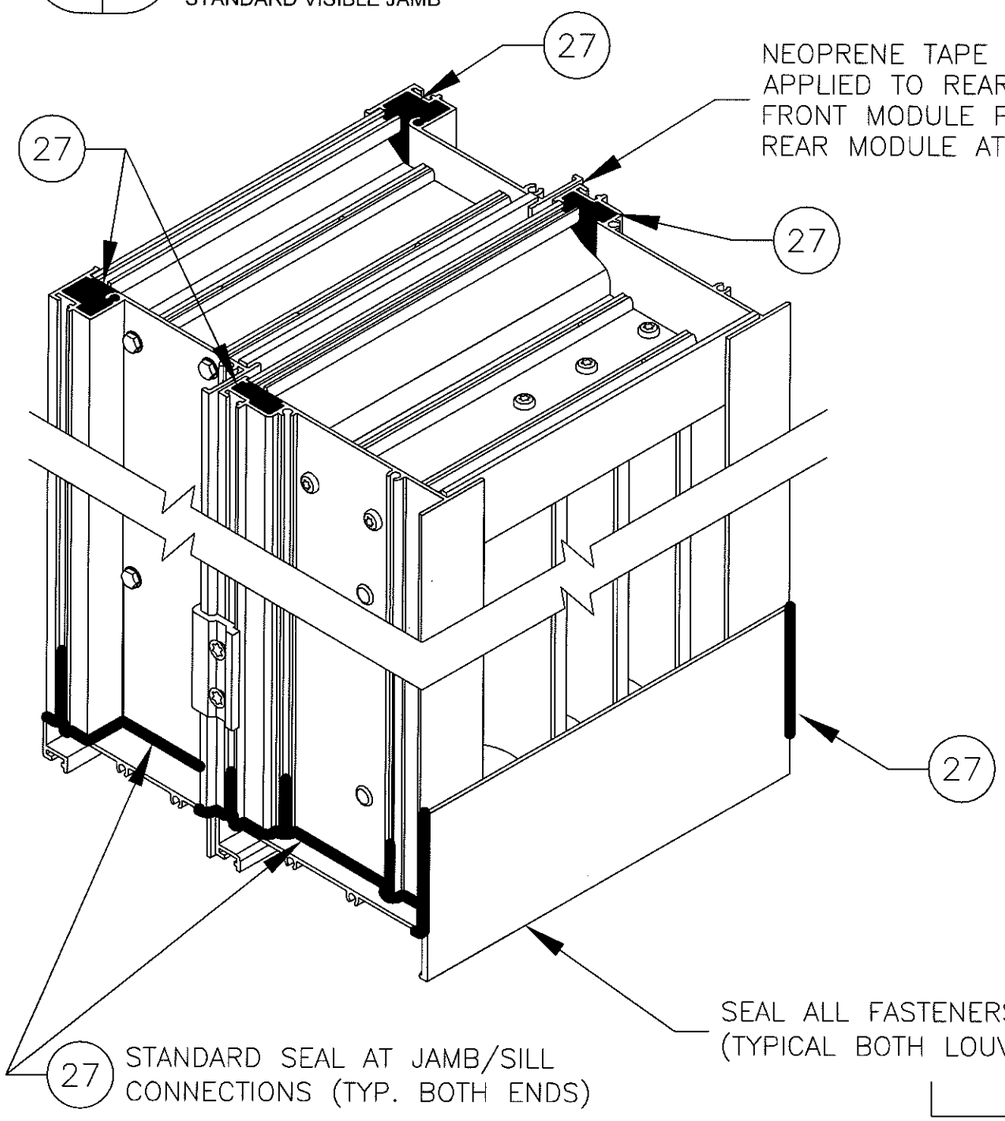

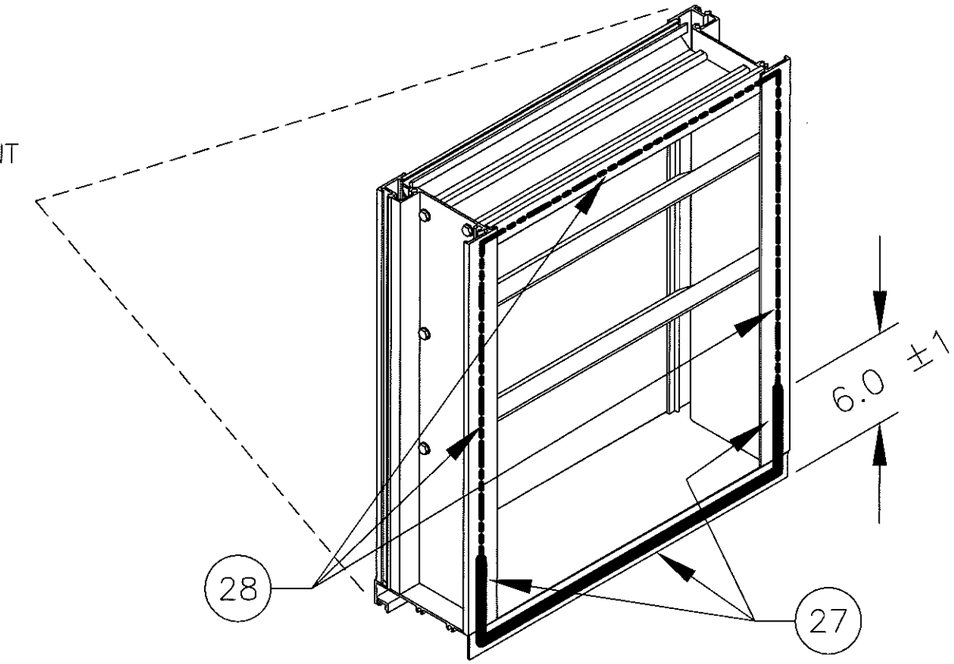

Approved as complying with the Florida Building Code
Date 01/28/2016
NOA# 16-0607.12
Miami Dade Product Control
By

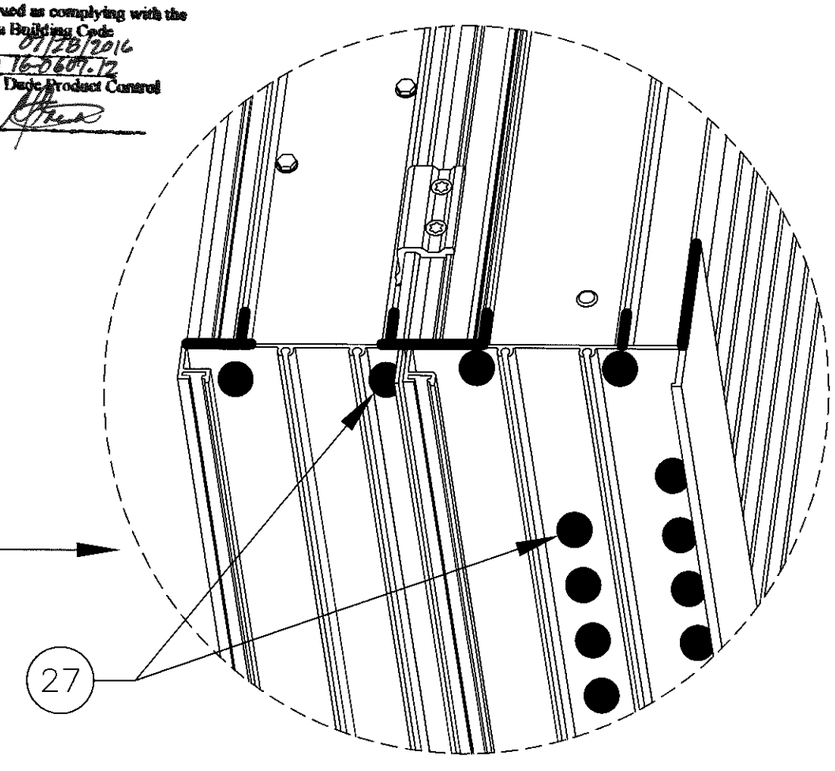

DRAWN BY NAH
DATE 5/23/2016
SCALE
SHEET NO. 8 OF 11
CAD DRAWING NO. SCC901MD

AIROLITE
The look that works™
SCHOFIELD, WISCONSIN 54476
715 841 8757

TITLE: SCC901MD, STANDARD JAMB, SEALING DETAILS

CHANDER P. NANGIA
LICENSE
No. 21936
STATE OF FLORIDA
PROFESSIONAL ENGINEER
MAY 25 2016

PAGE NOTES:

11 | 9 FACTORY SEALING DETAIL

RECESSED JAMB

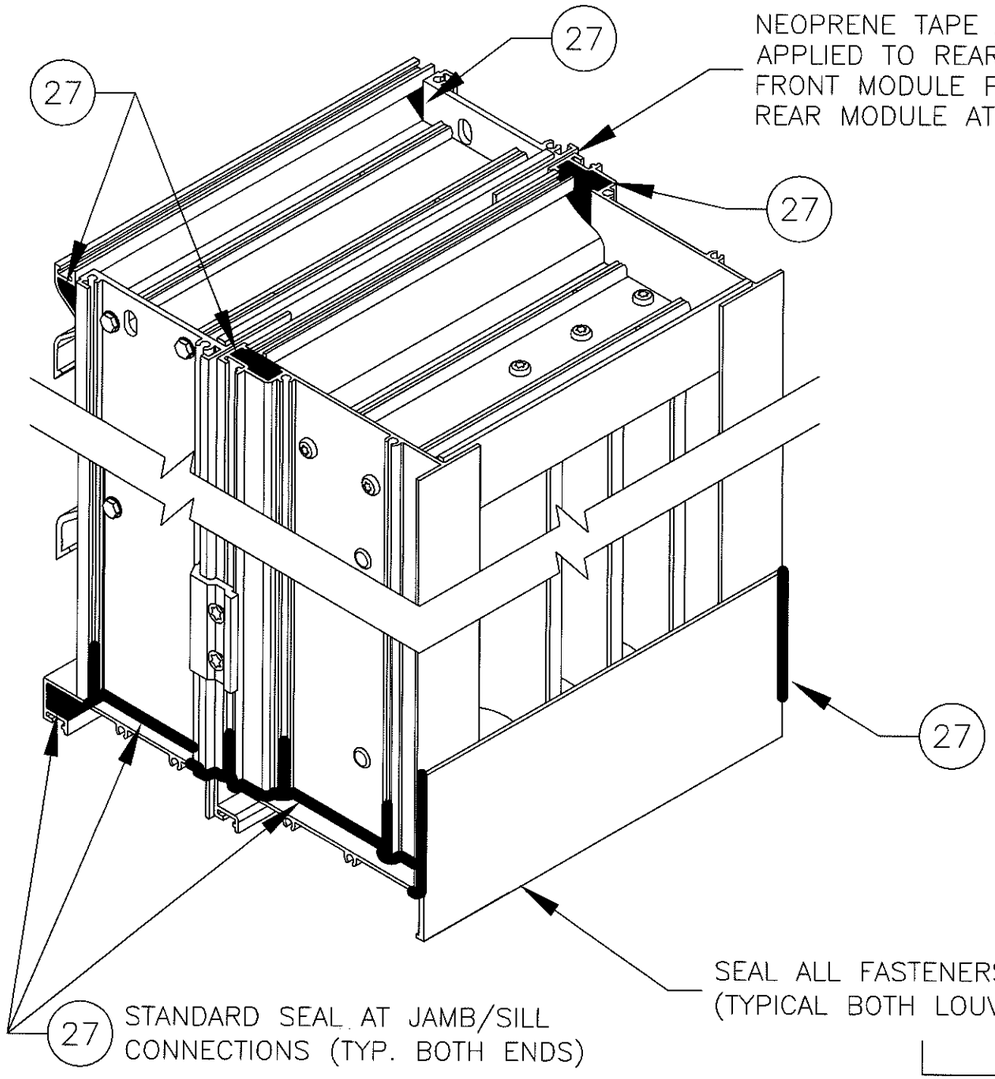

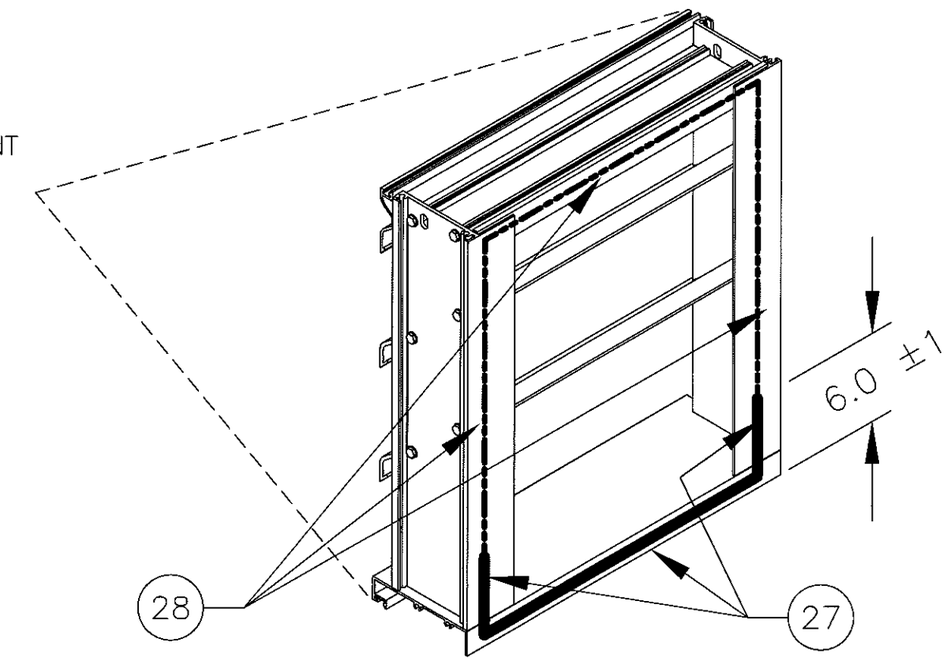

Approved as complying with the Florida Building Code
Date 07/28/2016
NOA# 16-0607.12
Miami Dade Product Control
By

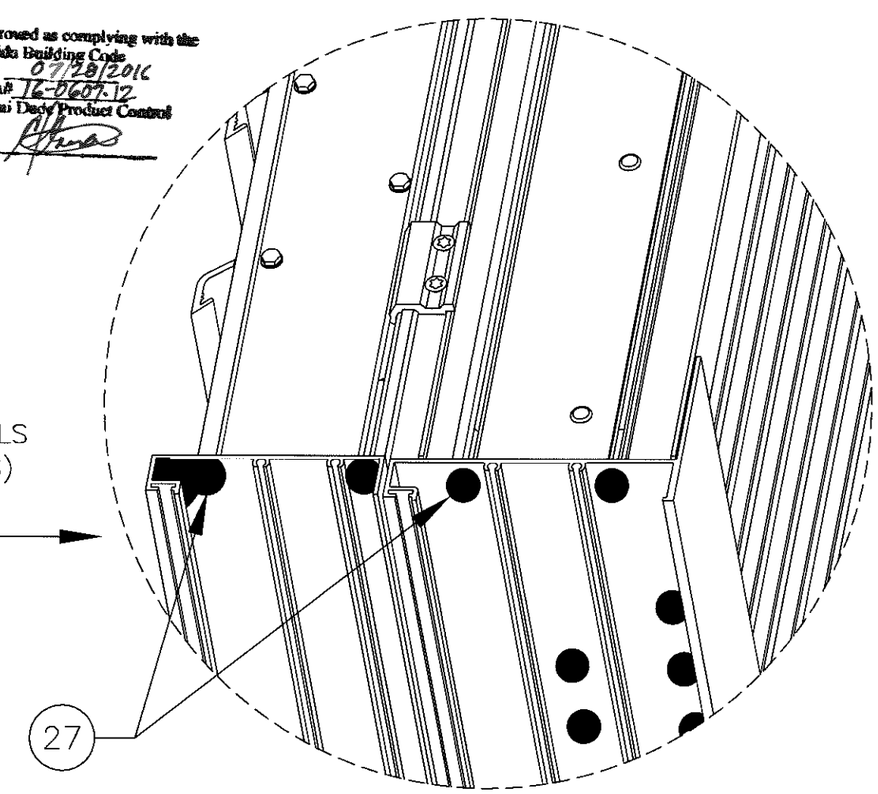

AIROLITE
The look that works™
SCHOFIELD, WISCONSIN 54476
715 841 8757

TITLE: SCC901MD, RECESSED JAMB, SEALING DETAILS

DRAWN BY NAH | DATE 5/23/2016
SCALE
SHEET NO. 9 OF 11
CAD DRAWING NO. SCC901MD

CHANDER P. NANGIA
LICENSE
No. 21088
STATE OF FLORIDA
PROFESSIONAL ENGINEER
MAY 28 2016

PAGE NOTES:

ITEM	DESCRIPTION	MATERIAL	INTERNAL ID#	NOTES
1	HEAD	6063-T5 ALUMINUM	125312	FRONT MODULE
2	BLADE	6063-T5 ALUMINUM	125049	FRONT MODULE (4.25 O.C. SPACING)
3	SILL	6063-T5 ALUMINUM	125917	FRONT MODULE
4	JAMB (STANDARD)	6063-T5 ALUMINUM	125046	FRONT MODULE (W/STANDARD JAMB OPTION)
5	JAMB (RECESSED)	6063-T5 ALUMINUM	125300	FRONT MODULE (W/RECESSED JAMB OPTION)
6	HEAD	6005-T5 ALUMINUM	126069	REAR MODULE
7	BLADE	6005-T5 ALUMINUM	126016	REAR MODULE (1.5 O.C. SPACING)
8	SILL	6005-T5 ALUMINUM	126070	REAR MODULE
9	JAMB	6063-T5 ALUMINUM	126015	REAR MODULE
10	JAMB BLANKOFF ANGLE	5052-H32 ALUMINUM	100175	REAR MODULE
11	COMBINATION SILL WITH BAFFLE	6005-T5 ALUMINUM	N/A	ALLOWED TO REPLACE ITEMS 8 AND 10
12	SILL BAFFLE	5052-H32 ALUMINUM	100172	REAR MODULE
13	CONTINUOUS MOUNTING ANGLE, PRIMARY	6061-T6 ALUMINUM	125967	REAR MODULE, AT HEAD AND SILL ONLY, MILL
14	STANDARD LOUVER JAMB CLIP	6061-T6 ALUMINUM	126128	12.5 MAX. CLIP SPACING (STANDARD JAMBS ONLY)
15	RECESSED LOUVER JAMB CLIP	6061-T6 ALUMINUM	126127	12.5 MAX. CLIP SPACING (RECESSED JAMBS ONLY)
16	JAMB REINFORCEMENT ANGLE	300 SERIES SS	190232	REQUIRED WHEN SECTION HEIGHT > 96.0, MILL
17	#10-16x2.25 SCREW	300 SERIES SS	416351	FRONT MODULE (FRAME CORNERS AND BLADE ENDS)
18	#10-16x1.25 SCREW	300 SERIES SS	416196	REAR MODULE (FRAME CORNERS AND BLADE ENDS)
19	#10x1.0L SCREW	300 SERIES SS	416462	TWO PER CLIP, TYPICAL BOTH CLIP STYLES
20	0.188ø RIVET	300 SERIES SS		8.0 MAX CENTERS
21	1/4-20 SCREW, HILTI KWIK-FLEX, PROVIDED BY LOUVER MANUFACTURER	COATED STEEL	416581	3.0 MAX CENTERS, 0.5 MIN THREAD
22	SHIM/SEPARATE DISSIMILAR MATL'S AS REQ'D	VARIES	N/A	BY OTHERS AS NEEDED
23	SHIM, NON-COMPRESSIBLE	VARIES	N/A	BY OTHERS, OPTIONAL
24	SEALANT AND BACKER ROD	VARIES	N/A	BY OTHERS, OPTIONAL
25	SUBSTRATE FASTENER - SEE ANCHOR TABLE (PRIMARY MOUNTING ANGLE)	SEE ANCHOR TABLE	N/A	BY OTHERS, MINIMUM OF ONE TYPE REQUIRED, SEE ANCHOR TABLE FOR ADDITIONAL INFORMATION
26	SUBSTRATE - GROUT FILLED CMU	GROUT FILLED CMU	N/A	BY OTHERS, MINIMUM OF ONE SUBSTRATE TYPE REQUIRED. SEE ANCHOR TABLE FOR NEEDED EDGE DISTANCE, SPACING, EMBEDMENT, ETC. IT IS THE RESPONSIBILITY OF THE PERMIT HOLDER TO VERIFY AND TO FACILITATE SEPARATION OF DISSIMILAR MATERIALS.
	SUBSTRATE - CONCRETE	CONCRETE	N/A	
	SUBSTRATE - STEEL STUD	STEEL	N/A	
	SUBSTRATE - STRUCTURAL STEEL	STEEL	N/A	
	SUBSTRATE - WOOD	WOOD	N/A	
	SUBSTRATE - ALUMINUM	ALUMINUM	N/A	
27	SEALANT	VARIOUS	N/A	FACTORY APPLIED
28	NEOPRENE TAPE	VARIOUS	N/A	FACTORY APPLIED
29	BLADE SUPPORT STRAP	ALUMINUM	N/A	NOT REQUIRED FOR NOA, BUT IS ON UNITS > 72, IS NOT ATTACHED TO JAMBS, CENTERED ON BLADE
30	#10x0.75 SCREW	300 SERIES SS	416108	ONE PER EXPOSED REAR BLADE, USED WITH ITEM 29
31	1/4-14 SCREW, 0.5 MIN THREAD	300/400 SERIES SS	416708	ONLY PROVIDED IF ORDERED WITH ITEM #33, OTHER FASTENER TYPES (BY OTHERS) ALLOWED AS PER FASTENER TABLE FOR ALUMINUM SUBSTRATE.
32	SECONDARY CONTINUOUS MOUNTING ANGLE	VARIES, ALUMINUM	VARIES	0.188 OR 0.25 THICK AS MAT'L TYPE REQUIRES, AT HEAD AND OR SILL ONLY, OPTIONAL, MILL
33	SUBSTRATE FASTENER FOR SECONDARY MOUNTING ANGLE (SEE FASTENER TABLE)	SEE ANCHOR TABLE	N/A	BY OTHERS, MINIMUM OF ONE TYPE REQUIRED, SEE ANCHOR TABLE FOR ADDITIONAL INFORMATION

1. IT IS THE RESPONSIBILITY OF THE PERMIT HOLDER TO VERIFY THE STRUCTURAL INTEGRITY OF THE EXISTING STRUCTURE TO SUPPORT THE LOADS IMPOSED BY THE LOUVER ASSEMBLY. THE LOUVER MANUFACTURER DOES NOT DETERMINE THE STRUCTURAL INTEGRITY OF THE SUBSTRATE STRUCTURE.

2. THE LOUVER HAS BEEN DESIGNED AND TESTED IN ACCORDANCE WITH MIAMI-DADE COUNTY PROTOCOLS (AND QUALIFIED IN ACCORDANCE WITH THE CURRENT FLORIDA BUILDING CODE AND TEST PROTOCOLS/STANDARDS THEREIN):
TAS-201 (LARGE MISSILE IMPACT), TAS-202 (UNIFORM STATIC WIND PRESSURE), TAS-203 (UNIFORM CYCLIC WIND PRESSURE), AND ANSI/AMCA STANDARD 550-15 [EQUIVALENT TO AMCA STANDARD 550-08 AND ANSI/AMCA STANDARD 550-09] (HIGH VELOCITY WIND DRIVEN RAIN)

3. THIS LOUVER HAS BEEN DESIGNED, TESTED, AND APPROVED TO WITHSTAND DESIGN PRESSURES OF UP TO AND INCLUDING +/-130PSF.

4. THE MAXIMUM SINGLE SECTION SIZE IS 60.0" WIDE BY 120.0" INCHES HIGH. SECTIONS MAY BE MOUNTED TO CREATE A MULTI-WIDE ASSEMBLY WITHOUT ANY ADDITIONAL FIELD SUPPORT. SINGLE/MULTIPLE-WIDE ASSEMBLIES MAY BE STACKED TO CREATE A MULTI-HIGH ASSEMBLY PROVIDED THERE IS ADEQUATE SUBSTRATE (DESIGNED AND BY OTHERS) AT THE HEAD AND SILL OF EACH SECTION TO SECURE THE HEAD AND SILL MOUNTING ANGLES TO THE SUBSTRATE AS NOTED HEREIN.

5. GENERAL LOUVER CONSTRUCTION: HEAD, SILL, JAMBS, AND BLADES FOR ALL CASES ARE EXTRUDED ALUMINUM. THE FRONT MODULE BLADE SPACING IS 4.25". THE REAR MODULE BLADE SPACING IS 1.5". BLADES, HEADS, JAMBS, AND SILLS ARE SECURED WITH TWO SCREWS PER END (TYPICAL FRONT AND REAR MODULES).

6. DUE TO PASSING ANSI/AMCA STANDARD 550, THE LOUVER IS DESIGNED TO PREVENT WIND-DRIVEN RAIN FROM PENETRATING THE SPACE BEHIND THE LOUVER. AS SUCH, THE LOUVER MAY BE INSTALLED IN A LOCATION WHERE THE SPACE/ROOM BEHIND THE LOUVER IS NOT DESIGNED TO DRAIN WATER PENETRATING INTO THE ROOM OR THE ROOM WILL HOUSE NON-WATER RESISTANT/PROOF EQUIPMENT, COMPONENTS, OR SUPPLIES.

7. INSTALLER TO PROVIDE SEPARATION OF DIS-SIMILAR MATERIALS AS REQUIRED (SEE CURRENT FLORIDA BUILDING CODE). SEE OLDER 2010 FL BUILDING CODE SECTION 2003.8.4 FOR ADDITIONAL INFORMATION ON SEPARATION OF DIS-SIMILAR MATERIALS.

8. ALL ALUMINUM, STAINLESS STEEL (SS), AND PLATED/COATED STEEL PARTS PROVIDED BY MANUFACTURER ARE INHERENTLY CORROSION RESISTANT OR HAVE A CORROSION RESISTANT COATING.

9. STEEL, STAINLESS STEEL, AND ALUMINUM PARTS MAY BE MADE OUT OF ALTERNATE ALLOYS THAT HAVE EQUAL OR GREATER YIELD STRENGTH. PART DIMENSIONS ARE MINIMUMS UNLESS DEFINED OTHERWISE.

10. THE PART'S INTERNAL ID# SHOWN ON THIS PAGE ARE FOR FACTORY USE AND TRACKING PURPOSES AND MAY BE UPDATED AT ANY TIME. ANY UPDATES WILL NOT ALTER THE ITEM AS DESCRIBED HEREIN. ALL DIMENSIONS ARE IMPERIAL. SS = STAINLESS STEEL.

Approved as complying with the Florida Building Code
Date 07/28/2016
NOA# 16-0607.12
Miami Dade Product Control
By

CHANDER P. NANGIA
LICENSE
No. 21938
STATE OF FLORIDA
PROFESSIONAL ENGINEER

JUL 05 2016

AIROLITE
The look that works™
SCHOFIELD, WISCONSIN 54476
715 841 8757

DATE 5/23/2016
DRAWN BY NAH
SCALE 1:1
SHEET NO. 10 OF 11
CAD DRAWING NO. SCC901MD

TITLE: SCC901MD, ITEM DESCRIPTIONS & GENERAL NOTES

PAGE NOTES:

ITEM 26, SUBSTRATE			ITEM 25, SUBSTRATE FASTENER FOR CONTINUOUS MOUNTING ANGLE, PRIMARY									
TYPE	MATERIAL MIN.	THICKNESS MIN.	DIA.	TYPE (ALL FASTENERS ARE HEX HEAD STYLE)	MAT'L	SPACING MAX.	EDGE MIN.	EMBED. MIN.	WASHER/FLANGE MIN.	ANGLE HOLE MAX.	SUBSTRATE HOLE MAX.
WOOD	G ≥ 0.42	3	1/4	LAG SCREW	*	3	1 1/2	2 7/8	NA	1/4	SEE FASTENER MANUFACTURER INSTRUCTIONS
			3/8			6			13/16 AT HEAD	3/8	
STEEL	A36	16 GA	1/4-20	BOLT W/ NUT OR THREAD CUTTING/TAPPING SCREW	*	3	3/4	16 GA	NA	5/16	5/16 FOR BOLT & NUT CONNECTION
	A36	14 GA	3/8-16			6	1	14 GA		13/32	3/8 FOR BOLT & NUT CONNECTION
ALUMINUM	6063-T5	1/8	1/4-20	BOLT W/ NUT OR THREAD CUTTING/TAPPING SCREW	*	3	1/2	1/8	NA	5/16	1/4
		0.132	3/8-16			6	3/4	0.132	3/4 AT NUT	13/32	3/8
CONCRETE	2 KSI	NOTE 4	1/4	BUILDEX TAPCON (BLUE, WHITE, OR 410 SS)	VARIES	3	2 3/8	1 1/2	NA	1/4	SEE FASTENER MANUFACTURER INSTRUCTIONS
	3 KSI			BUILDEX TAPCON (BLUE, WHITE, OR 410 SS)	VARIES		1 1/2	1 3/4		1/4	
	2.3 KSI			ELCO AGGRE-GATOR	300 SS		1 1/2	1 3/8		1/4	
	2.9 KSI			ELCO ULTRACON SS4	410 SS		2 1/2	1 3/4		1/4	
	3.4 KSI			ELCO CRETE-FLEX SS4, SMALL HEAD	410 SS		2 1/2	1 3/4		1/4	
	3.4 KSI			ELCO CRETE-FLEX SS4, FLANGED HEAD	410 SS		2 1/2	1 3/4		1/4	
	2.5 KSI			POWERS 316 STAINLESS STEEL WEDGE-BOLT	316 SS		2	1 7/8		5/16	
	2 KSI			POWERS WEDGE-BOLT PLUS	STEEL		1 1/2	1 1/2		5/16	
	2.5 KSI		3/8	POWERS 316 STAINLESS STEEL WEDGE-BOLT	316 SS	6	1 1/4	2 3/8		7/16	
	2 KSI			POWERS WEDGE-BOLT PLUS	STEEL		1 1/8	1 1/2		7/16	
	2.5 KSI			CRACKED OR UNCRACKED, POWERS WEDGE-BOLT PLUS	STEEL		1 3/4	2 1/8		7/16	
GROUT FILLED CMU	NOTE 1		1/4	ELCO AGGRE-GATOR	300 SS	3	2	2	NA	1/4	SEE FASTENER MANUFACTURER INSTRUCTIONS
	NOTE 2			ELCO ULTRACON SS4	410 SS		2 1/2	2		1/4	
	NOTE 3		3/8	POWERS WEDGE-BOLT PLUS	STEEL	6	2	2 1/2		7/16	

ITEM 26, SUBSTRATE			ITEM 33, SECONDARY CONTINUOUS MOUNTING ANGLE SUBSTRATE FASTENER									
TYPE	MATERIAL MIN.	THICKNESS MIN.	DIA.	TYPE (ALL FASTENERS ARE HEX HEAD STYLE)	MAT'L	SPACING MAX.	EDGE MIN.	EMBED. MIN.	WASHER/FLANGE MIN.	ANGLE HOLE MAX.	SUBSTRATE HOLE MAX.
WOOD	G ≥ 0.42	3	1/4	LAG SCREW	*	3	1 1/2	2 7/8	NA	1/4	SEE FASTENER MANUFACTURER INSTRUCTIONS
STEEL	A36	0.0677	1/4-20	BOLT W/ NUT OR THREAD CUTTING/TAPPING SCREW	*	3	3/4	0.0677	NA	1/4	1/4 FOR BOLT & NUT CONNECTION
ALUMINUM	6063-T5	0.138	1/4-20	BOLT W/ NUT OR THREAD CUTTING/TAPPING SCREW	*	3	1/2	0.138	0.6 AT NUT	1/4	1/4 FOR BOLT & NUT CONNECTION
	6005-T5	1/8						1/8	NA		
	6061-T6										
CONCRETE	2 KSI	NOTE 4	1/4	BUILDEX TAPCON (BLUE, WHITE, OR 410 SS)	VARIES	3	1 1/2	1 3/4	NA	1/4	SEE FASTENER MANUFACTURER INSTRUCTIONS
	2.9 KSI			ELCO ULTRACON SS4	410 SS		1	1 3/4		1/4	
	3.4 KSI			ELCO CRETE-FLEX SS4, SMALL OR LARGE HEAD	410 SS		1	1 3/4		1/4	
	4 KSI			POWERS 316 STAINLESS STEEL WEDGE-BOLT	316 SS		1 3/4	1 7/8		5/16	
	2 KSI			POWERS WEDGE-BOLT PLUS	STEEL		2	1 1/2		5/16	
GROUT FILLED CMU	NOTE 1		1/4	ELCO AGGRE-GATOR	300 SS	3	2	2	NA	1/4	SEE FASTENER MANUFACTURER INSTRUCTIONS

NOTE *: LAG SCREWS SHALL HAVE STRENGTHS OF MINIMUM GRADE 1 STEEL, OTHER BOLT AND SCREWS SHALL HAVE STRENGTHS OF MINIMUM GRADE 2 STEEL.

NOTE 1: CONCRETE MASONRY (CMU) SHALL BE > THE FOLLOWING; 6" WIDE, CMU CONFORMING TO ASTM C-90 FILLED WITH 4,747 KSI GROUT.

NOTE 2: CONCRETE MASONRY (CMU) SHALL BE > THE FOLLOWING; 6" WIDE, 2 KSI CMU CONFORMING TO ASTM C-90 WITH 1624 KSI GROUT.

NOTE 3: CONCRETE MASONRY (CMU) SHALL BE > THE FOLLOWING; 6" WIDE, GRADE N, TYPE II, LIGHT-WEIGHT/MEDIUM-WEIGHT/NORMAL-WEIGHT CMU CONFORMING TO ASTM C-90. MORTAR MUST BE TYPE N.

NOTE 4: VARIES WITH SIZE OF FASTENER USED, SEE FASTENER MANUFACTURER'S INSTRUCTIONS.

SS = STAINLESS STEEL

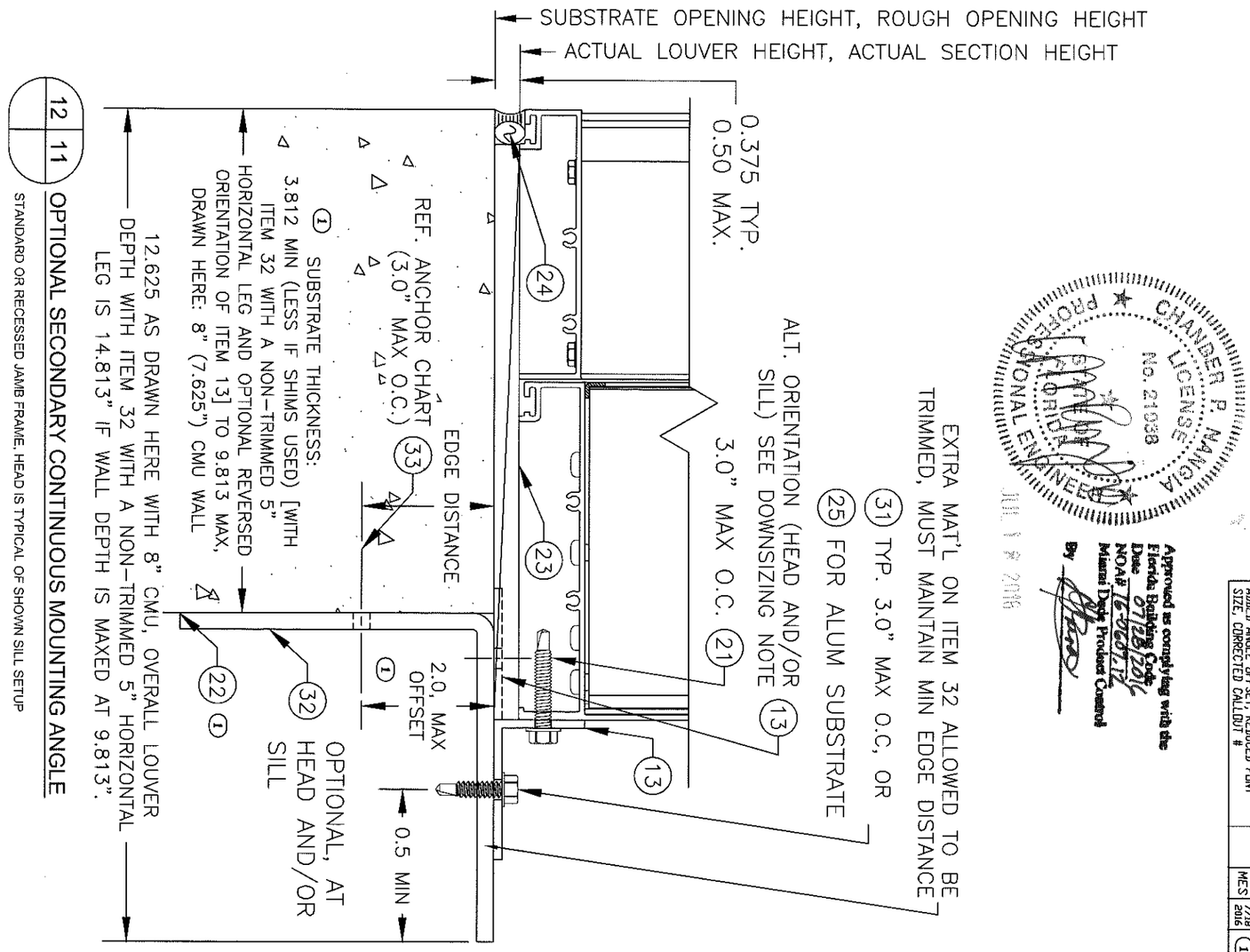

CHANDER P. NAGIA
LICENSE No. 21038
STATE OF FLORIDA
PROFESSIONAL ENGINEER

JUL 1 8 2016

Approved as complying with the Florida Building Code
Date 07/28/2016
NOA# 16-0601.12
Miami Dade Product Control
By

REVISION			
ADDED ANGLE OFFSET, REDUCED FONT SIZE, CORRECTED CALLOUT #	MES	7/28/2016	1
	BY	DATE	SYM

PAGE NOTES:

- STANDARD LOUVER HEIGHT DOWNSIZING IS 0.375 PER END (0.750 OVERALL TOTAL) WHEN ORDERED BASED ON ROUGH OPENING SIZING.
- MULTI-HIGH ASSEMBLIES ARE PERMITTED AS-LONG-AS EACH LOUVER SECTION'S WIDTH/HEIGHT ARE WITHIN THE ALLOWABLE MAXIMUMS AND SUITABLE SUBSTRATES SURROUNDS EACH LOUVER SECTION ASSEMBLY PERIMETER AND EACH LOUVER SECTION IS INSTALLED PER DETAILS.

AIROLITE
The look that works™
SCHOFIELD, WISCONSIN 54476
715 841 8757

TITLE:
SCC901MD, SUBSTRATE & ANCHOR TABLES, & SECONDARY MTG. ANGLE

DRAWN BY	DATE
NAH	5/23/2016
SCALE	
SHEET NO.	11 OF 11
CAD DRAWING NO.	SCC901MD