MIAMI-DADE COUNTY
DEPARTMENT OF REGULATORY AND ECONOMIC RESOURCES (RER)
BOARD AND CODE ADMINISTRATION DIVISION

MIAMI-DADE COUNTY
PRODUCT CONTROL SECTION
11805 SW 26 Street, Room 208
T (786) 315-2590 F (786) 315-2599
www.miamidade.gov/economy

NOTICE OF ACCEPTANCE (NOA)

ES Windows, LLC
3550 NW 49th Street
Miami, FL 33142

SCOPE:

This NOA is being issued under the applicable rules and regulations governing the use of construction materials. The documentation submitted has been reviewed and accepted by Miami-Dade County RER - Product Control Section to be used in Miami Dade County and other areas where allowed by the Authority Having Jurisdiction (AHJ).

This NOA shall not be valid after the expiration date stated below. The Miami-Dade County Product Control Section (In Miami Dade County) and/or the AHJ (in areas other than Miami Dade County) reserve the right to have this product or material tested for quality assurance purposes. If this product or material fails to perform in the accepted manner, the manufacturer will incur the expense of such testing and the AHJ may immediately revoke, modify, or suspend the use of such product or material within their jurisdiction. RER reserves the right to revoke this acceptance, if it is determined by Miami-Dade County Product Control Section that this product or material fails to meet the requirements of the applicable building code.

This product is approved as described herein, and has been designed to comply with the Florida Building Code, including the High Velocity Hurricane Zone.

DESCRIPTION: Series "EL400" Aluminum Sliding Glass Door - L.M.I.

APPROVAL DOCUMENT: Drawing No. **W16-73**, titled "ES-EL400 Alum. Sliding Glass Door (L.M.I.)", sheets 1 through 23 of 23, dated 11/28/16, with revision A dated 07/12/17, prepared by Al-Farooq Corporation, signed and sealed by Javad Ahmad, P.E., bearing the Miami-Dade County Product Control Approval stamp with the Notice of Acceptance number and approval date by the Miami-Dade County Product Control Section.

MISSILE IMPACT RATING: Large and Small Missile Impact Resistant

LABELING: Each unit shall bear a permanent label with the manufacturer's name or logo, **Baranquilla, Columbia, S.A.**, series, and the following statement: "Miami-Dade County Product Control Approved", unless otherwise noted herein.

RENEWAL of this NOA shall be considered after a renewal application has been filed and there has been no change in the applicable building code negatively affecting the performance of this product.

TERMINATION of this NOA will occur after the expiration date or if there has been a revision or change in the materials, use, and/or manufacture of the product or process. Misuse of this NOA as an endorsement of any product, for sales, advertising or any other purposes shall automatically terminate this NOA. Failure to comply with any section of this NOA shall be cause for termination and removal of NOA.

ADVERTISEMENT: The NOA number preceded by the words Miami-Dade County, Florida, and followed by the expiration date may be displayed in advertising literature. If any portion of the NOA is displayed, then it shall be done in its entirety.

INSPECTION: A copy of this entire NOA shall be provided to the user by the manufacturer or its distributors and shall be available for inspection at the job site at the request of the Building Official.

This NOA consists of this page 1 and evidence pages E-1 and E-2, as well as approval document mentioned above.

The submitted documentation was reviewed by **Jorge M. Plasencia, P.E.**

MIAMI-DADE COUNTY APPROVED

7/14/17

ES Windows, LLC

NOTICE OF ACCEPTANCE: EVIDENCE SUBMITTED

A. DRAWINGS

1. Manufacturer's die drawings and sections.
2. Drawing No. **W16-73**, titled "ES-EL400 Alum.Sliding Glass Door (L.M.I.)", sheets 1 through 23 of 23, dated 11/28/16, with revision A dated 07/12/17, prepared by Al-Farooq Corporation, signed and sealed by Javad Ahmad, P.E.

B. TESTS

1. Test reports on: 1) Air Infiltration Test, per FBC, TAS 202-94
   2) Uniform Static Air Pressure Test, Loading per FBC, TAS 202-94
   3) Water Resistance Test, per FBC, TAS 202-94
   4) Forced Entry Test, per FBC, and TAS 202-94
   6) Large Missile Impact Test per FBC, TAS 201-94
   7) Cyclic Wind Pressure Loading per FBC, TAS 203-94

   along with marked-up drawings and installation diagram of an aluminum sliding glass door, prepared by Blackwater Testing, Inc., Test Report No. **BT-ESW-17-009**, dated 06/15/17, signed and sealed by Constantin Bortes, P.E. with Letter of Clarification issued on 07/13/17, signed and sealed by Constantin Bortes, P.E.

C. CALCULATIONS

1. Anchor verification calculations and structural analysis, complying with **FBC-5th Edition (2014) and FBC-6th Edition (2017)**, dated 06/20/17 and revised on 07/13/17, prepared by Al-Farooq Corporation, signed and sealed by Javad Ahmad, P.E.
2. Glazing complies with **ASTM E1300-09.**

D. QUALITY ASSURANCE

1. Miami-Dade Department of Regulatory and Economic Resources (RER)

MATERIAL CERTIFICATIONS

1. Notice of Acceptance No. **16-1117.01** issued to **Kuraray America, Inc.** for their **"Trosifol® Ultraclear, Clear and Color PVB Glass Interlayers"** dated 01/19/17, expiring on 07/08/19.
2. Notice of Acceptance No. **14-0916.11** issued to **Kuraray America, Inc.** for their "**Sentry Glass® (Clear and White) Glass Interlayer**" dated 06/25/15, expiring on 07/04/18.
3. Notice of Acceptance No. **15-1201.11** issued to **Eastman Chemical Co. (MA)** for their "**Saflex Clear and Color Glass Interlayers**" dated 03/17/16, expiring on 05/21/21.
4. Notice of Acceptance No. **14-0423.15** issued to **Eastman Chemical Co. (MA)** for their "**Saflex CP – Saflex and Saflex HP Composite Glass Interlayers with PET Core**" dated 06/19/14, expiring on 11/11/18.

Jorge M. Plasencia, P.E.
Product Control Unit Supervisor
NOA No. 16-0617.02
Expiration Date: July 20, 2022
Approval Date: July 20, 2017

NOTICE OF ACCEPTANCE: EVIDENCE SUBMITTED

F. STATEMENTS

1. Statement letter of conformance, complying with **FBC-5th Edition (2014)** and **FBC-6th Edition (2017)** dated 07/12/17, issued by Al-Farooq Corporation, signed and sealed by Javad Ahmad, P.E.
2. Statement letter of no financial interest, dated 07/12/17, issued by Al-Farooq Corporation, signed and sealed by Javad Ahmad, P.E.
3. Distributor Agreement, signed by Carlos Garcia and by Evelyn Daes.
4. Laboratory compliance statement for Test Report No. **BT-ESW-17-009**, issued by Blackwater Testing, Inc., dated 06/15/17, signed and sealed by Dennis Duffy, CEO.
5. Proposal No. **16-1478** issued by the Product Control Section, dated 11/17/16, signed by Ishaq Chanda, P.E.

Jorge M. Plasencia, P.E.
Product Control Unit Supervisor
NOA No. 16-0617.02
Expiration Date: July 20, 2022
Approval Date: July 20, 2017

DAYLITE OPENING WIDTH:
PANEL WIDTH – 5.688"

DAYLITE OPENING HEIGHT:
PANEL HEIGHT – 5.813"

PANEL HEIGHT = DOOR FRAME HEIGHT – 1.250"

THESE DOORS ARE RATED FOR LARGE & SMALL MISSILE IMPACT.
SHUTTERS ARE NOT REQUIRED.

SERIES ES-EL400
ALUMINUM SLIDING GLASS DOOR

THIS PRODUCT HAS BEEN DESIGNED AND TESTED TO COMPLY WITH THE REQUIREMENTS OF THE 2014 (5TH EDITION)/2017 (6TH EDITION) FLORIDA BUILDING CODE INCLUDING HIGH VELOCITY HURRICANE ZONE (HVHZ).

1BY OR 2BY WOOD BUCKS & BUCK FASTENERS BY OTHERS, MUST BE DESIGNED AND INSTALLED ADEQUATELY TO TRANSFER APPLIED PRODUCT LOADS TO THE BUILDING STRUCTURE.

ANCHORS SHALL BE CORROSION RESISTANT, SPACED AS SHOWN ON DETAILS AND INSTALLED PER MANUF'S INSTRUCTIONS. SPECIFIED EMBEDMENT TO BASE MATERIAL SHALL BE BEYOND WALL DRESSING OR STUCCO.

A LOAD DURATION INCREASE IS USED IN DESIGN OF ANCHORS INTO WOOD ONLY.

ALL SHIMS TO BE HIGH IMPACT, NON-METALLIC AND NON-COMPRESSIBLE.

MATERIALS INCLUDING BUT NOT LIMITED TO STEEL/METAL SCREWS, THAT COME INTO CONTACT WITH OTHER DISSIMILAR MATERIALS SHALL MEET THE REQUIREMENTS OF THE 2014/2017 FLORIDA BUILDING CODE & ADOPTED STANDARDS.

THIS PRODUCT APPROVAL IS GENERIC AND DOES NOT PROVIDE INFORMATION FOR A SITE SPECIFIC PROJECT, i.e. LIFE SAFETY OF THIS PRODUCT, ADEQUACY OF STRUCTURE RECEIVING THIS PRODUCT AND SEALING AROUND OPENING FOR WATER INFILTRATION RESISTANCE ETC.
CONDITIONS NOT SHOWN IN THIS DRAWING ARE TO BE ANALYZED SEPARATELY, AND TO BE REVIEWED BY BUILDING OFFICIAL.

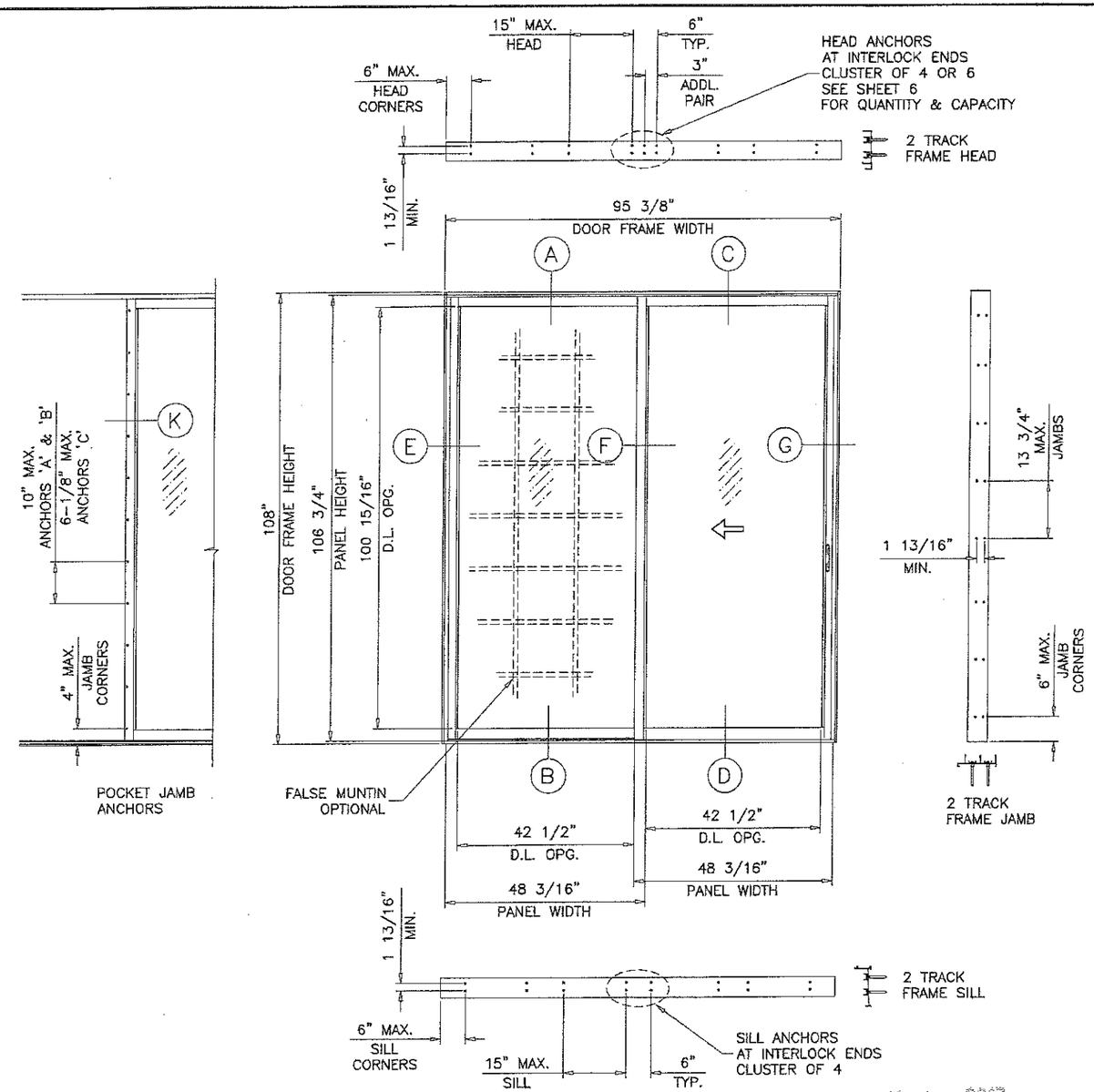

TYPICAL ELEVATION
OX

JUL 12 2017

INSTRUCTIONS:

USE CHARTS AS FOLLOWS

STEP 1 DETERMINE DESIGN WIND LOAD REQUIREMENT BASED ON WIND VELOCITY, BLDG. HEIGHT, WIND ZONE USING APPLICABLE ASCE 7 STANDARD.

STEP 2 DETERMINE DOOR CAPACITY FROM TABLE ON SHEET 5 FOR THE REINFORCING OPTION USED.

STEP 3 USING CHARTS ON SHEET 6 SELECT ANCHOR OPTION WITH DESIGN RATING MORE THAN DESIGN LOAD SPECIFIED IN STEP 1 ABOVE.

STEP 5 THE LOWEST VALUE RESULTING FROM STEPS 2 AND 3 SHALL APPLY TO ENTIRE SYSTEM.

PRODUCT APPROVED
as complying with the Florida Building Code
NOA-No. 16-0617.02
Approval Date 07/20/2017
By
Miami-Dade Product Control

JAVAD AHMAD
LICENSE
No. 70592
STATE OF FLORIDA
PROFESSIONAL ENGINEER

AL-FAROOQ CORPORATION
ENGINEERS & PRODUCT DEVELOPMENT
9360 SUNSET DRIVE, SUITE 220
MIAMI, FLORIDA 33173
(C.A.N. 3538)
TEL (305) 264-8100 FAX. (305) 262-6978

COMP-ANL\W16-73ES

ES-EL400 ALUM SLIDING GLASS DOOR (L.M.I.)

E.S. WINDOWS, LLC
3550 N.W. 49 STREET
MIAMI, FL. 33142
TEL. (305) 638-5151 FAX. (305) 638-5158

revisions:			
no	date	by	description
A	07.12.17		REV. PER RER COMMENTS

date: 11-28-16
scale: 3/8"=1'-0"
dr. by: TARIQ
chk. by:

drawing no.
W16-73

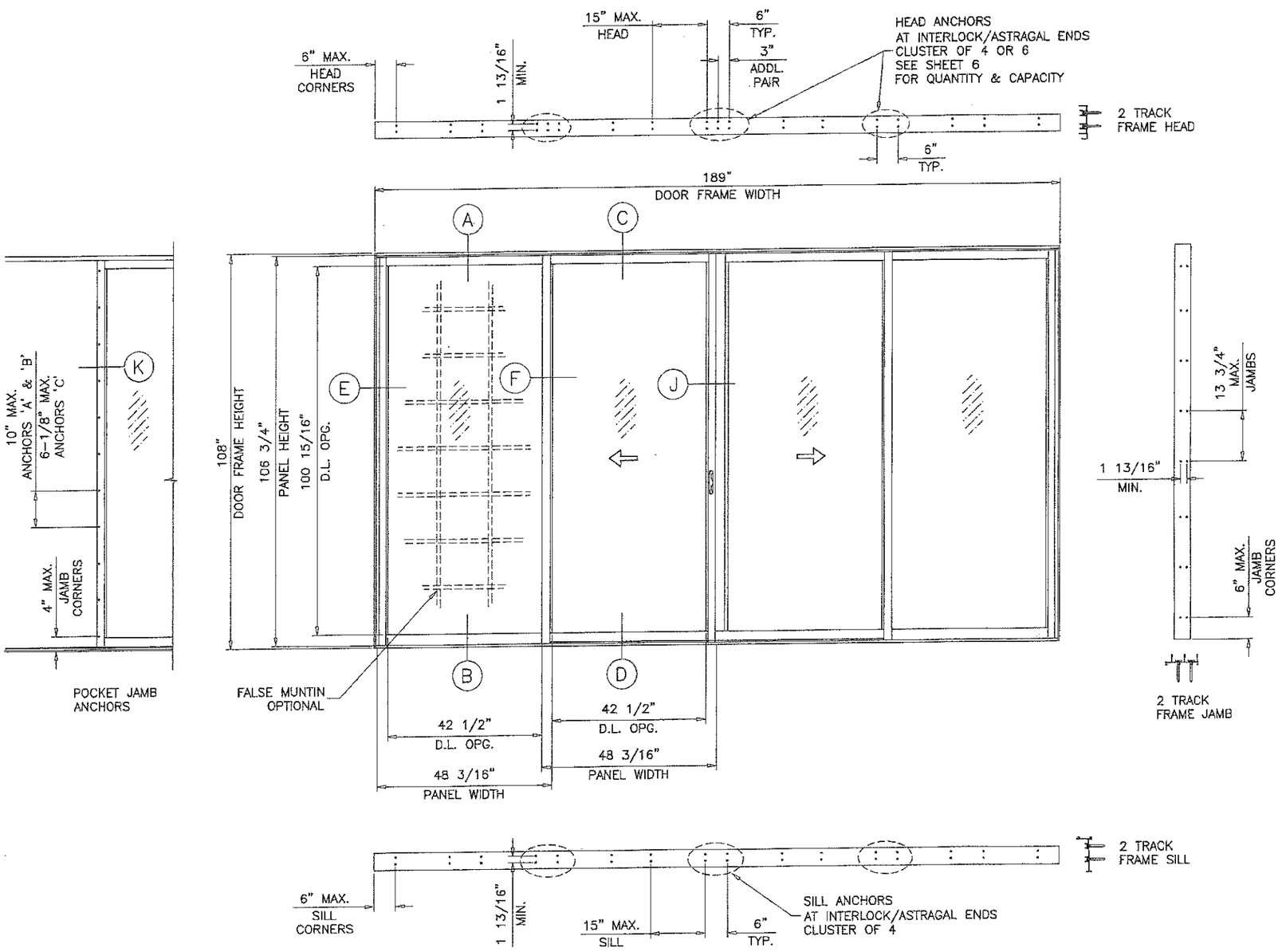

TYPICAL ELEVATION

OX–XO

JUL 1? 2017

PRODUCT APPROVED
as complying with the Florida Building Code
NOA-No. 16-0617.02
Approval Date 07/20/2017
By
Miami-Dade Product Control

JAVAD AHMAD
LICENSE
No. 70592
STATE OF FLORIDA
PROFESSIONAL ENGINEER

AL-FAROOQ CORPORATION
ENGINEERS & PRODUCT DEVELOPMENT
9360 SUNSET DRIVE, SUITE 220
MIAMI, FLORIDA 33173 (C.A.N. 3538)
TEL. (305) 264-8100 FAX. (305) 262-6978

COMP–ANL\W16–73ES

ES–EL400 ALUM SLIDING GLASS DOOR (L.M.I.)

E.S. WINDOWS, LLC
3550 N.W. 49 STREET
MIAMI, FL. 33142
TEL. (305) 638–5151 FAX. (305) 638–5158

revisions:

no	date	by	description
A	07.12.17		REV. PER RER COMMENTS

date: 11–28–16
scale: 3/8"=1'–0"
dr. by: TARIQ
chk. by:

drawing no.
W16–73

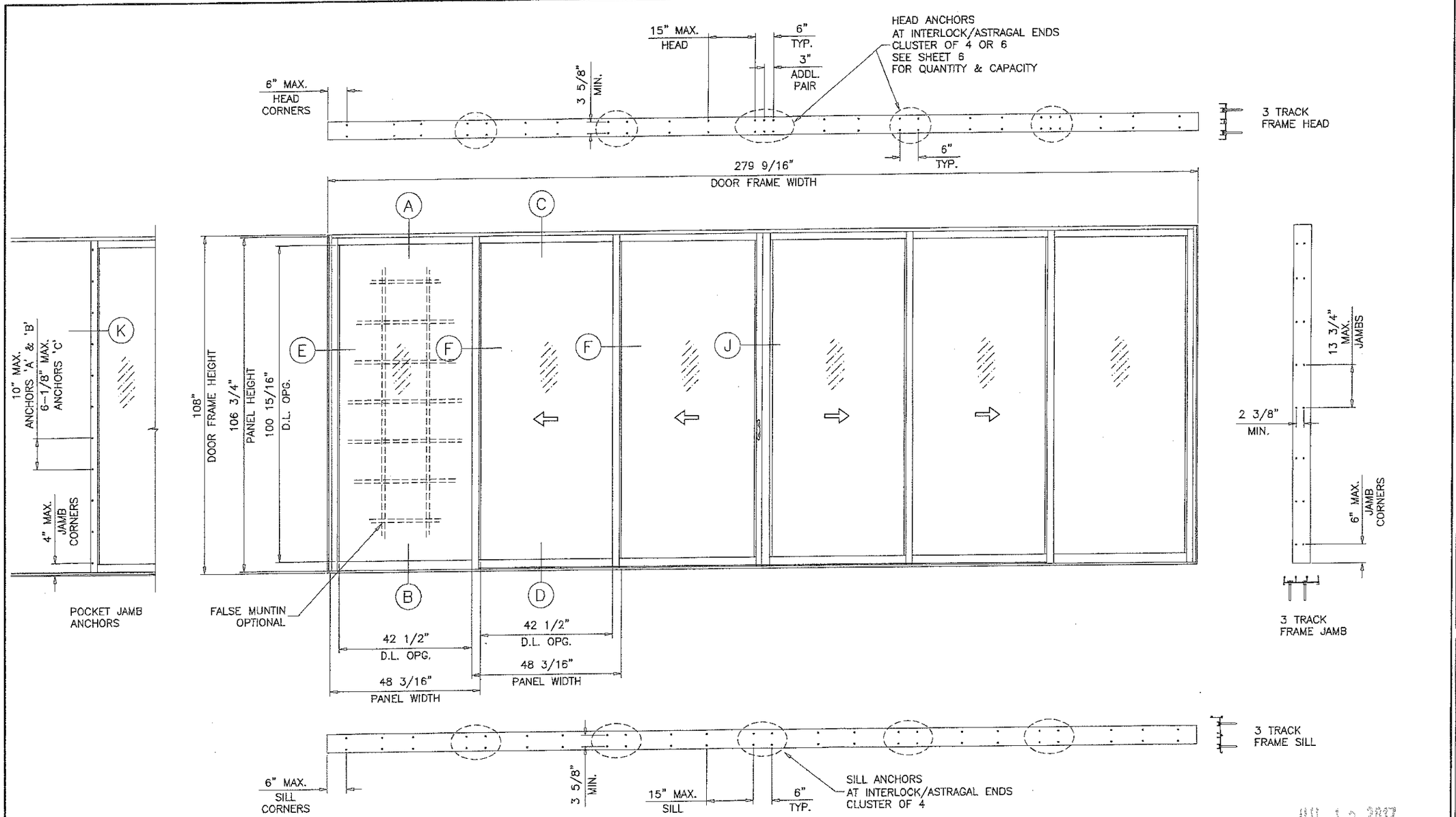

TYPICAL ELEVATION

OXX-XXO

JUL 12 2017

PRODUCT APPROVED
as complying with the Florida Building Code
NOA-No. 16-0617.02
Approval Date 07/20/2017
By
Miami-Dade Product Control

JAVAD AHMAD
LICENSE
No. 70592
STATE OF FLORIDA
PROFESSIONAL ENGINEER

AL-FAROOQ CORPORATION
ENGINEERS & PRODUCT DEVELOPMENT
9360 SUNSET DRIVE, SUITE 220
MIAMI, FLORIDA 33173 (C.A.N. 3538)
TEL. (305) 264-8100 FAX. (305) 262-6978
COMP-ANL\W16-73ES

ES-EL400 ALUM SLIDING GLASS DOOR (L.M.I.)

E.S. WINDOWS, LLC
3550 N.W. 49 STREET
MIAMI, FL. 33142
TEL. (305) 638-5151 FAX. (305) 638-5158

(revisions:

no	date	by	description
A	07.12.17		REV. PER RER COMMENTS

date: 11-28-16
scale: 3/8"=1'-0"
dr. by: TARIQ
chk. by:

drawing no.
W16-73

sheet 3 of 23

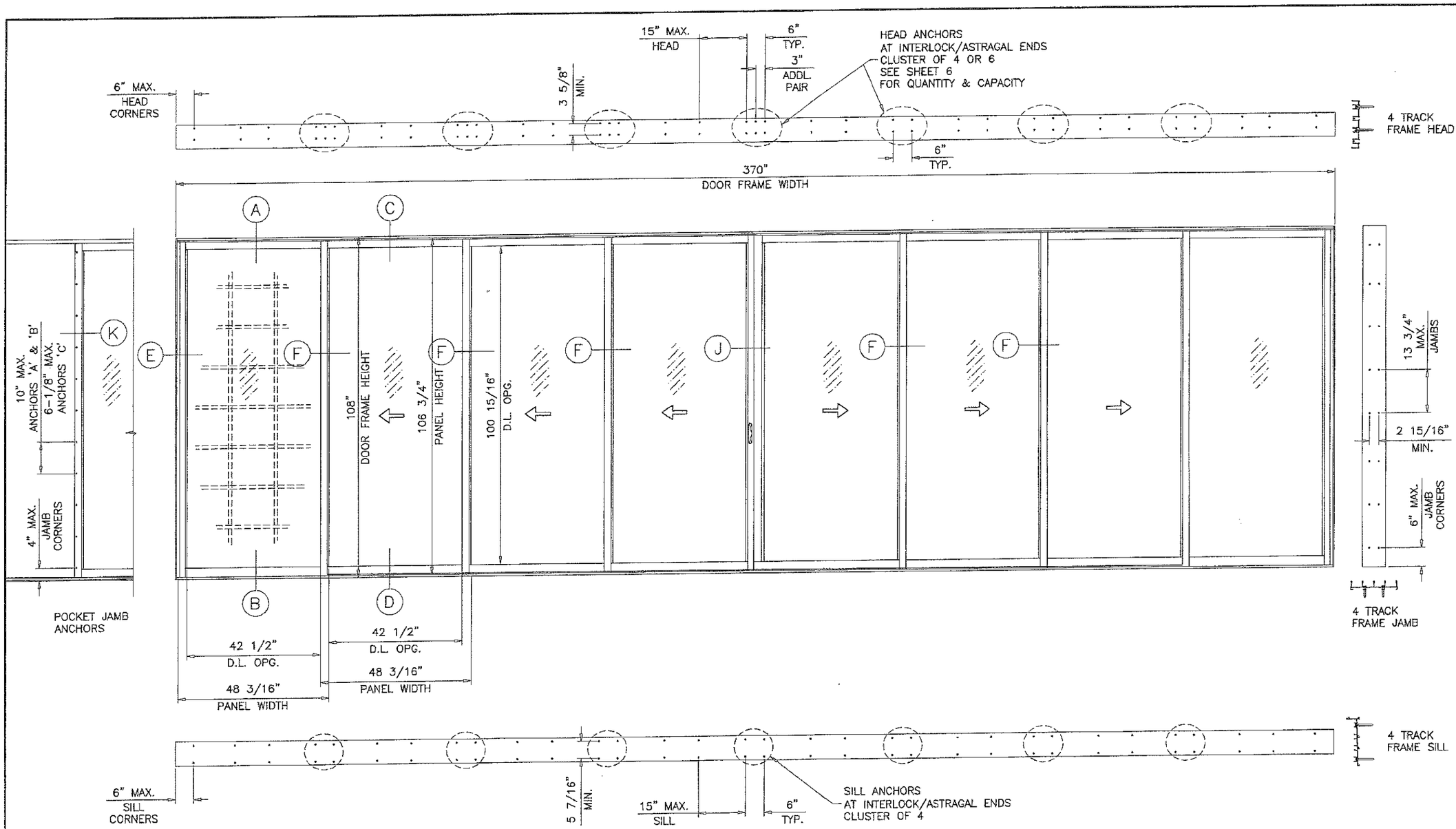

TYPICAL ELEVATION

OXXX-XXXO

JUL 12 2017

PRODUCT APPROVED
as complying with the Florida Building Code
NOA-No. 16-0617.02
Approval Date 07/20/2017
By
Miami-Dade Product Control

JAVAD AHMAD
LICENSE
No. 70582
STATE OF FLORIDA
PROFESSIONAL ENGINEER

AL-FAROOQ CORPORATION
ENGINEERS & PRODUCT DEVELOPMENT
9360 SUNSET DRIVE, SUITE 220
MIAMI, FLORIDA 33173 (C.A.N. 3538)
TEL. (305) 264-8100 FAX. (305) 262-6978

COMP-ANL\W16-73ES

ES-EL400 ALUM SLIDING GLASS DOOR (L.M.I.)

E.S. WINDOWS, LLC
3550 N.W. 49 STREET
MIAMI, FL. 33142
TEL. (305) 638-5151 FAX. (305) 638-5158

revisions:

no	date	by	description
A	07.12.17		REV. PER RER COMMENTS

date: 11-28-18
scale: 3/8"=1'-0"
dr. by: TARIQ
chk. by:

drawing no.
W16-73

DESIGN LOAD CAPACITY – PSF					
AVERAGE PANEL WIDTH INCHES	DOOR FRAME HEIGHT INCHES	INTERLOCK & ASTRAGAL STILES WITHOUT REINF.		INTERLOCK & ASTRAGAL STILES WITH REINF.	
		EXT.(+)	INT.(–)	EXT.(+)	INT.(–)
30	82	60.0	60.0	80.0	80.0
36		60.0	60.0	80.0	80.0
42		60.0	60.0	80.0	80.0
47–1/4		60.0	60.0	80.0	80.0
48		59.1	59.1	78.8	78.8
54		52.5	52.5	70.0	70.0
60		–	–	47.3	47.3
30	84	60.0	60.0	80.0	80.0
36		60.0	60.0	80.0	80.0
42		60.0	60.0	80.0	80.0
47–1/4		60.0	60.0	80.0	80.0
48		59.1	59.1	78.8	78.8
54		52.5	52.5	70.0	70.0
60		–	–	47.3	47.3
30	90	60.0	60.0	80.0	80.0
36		60.0	60.0	80.0	80.0
42		60.0	60.0	80.0	80.0
47–1/4		60.0	60.0	80.0	80.0
48		59.1	59.1	78.8	78.8
54		–	–	52.5	52.5
30	96	60.0	60.0	80.0	80.0
36		60.0	60.0	80.0	80.0
42		60.0	60.0	80.0	80.0
47–1/4		60.0	60.0	80.0	80.0
48		–	–	59.1	59.1
30	102	–	–	60.0	60.0
36		–	–	60.0	60.0
42		–	–	60.0	60.0
47–1/4		–	–	60.0	60.0
48		–	–	59.1	59.1
30	108	–	–	60.0	60.0
36		–	–	60.0	60.0
42		–	–	60.0	60.0
47–1/4		–	–	60.0	60.0

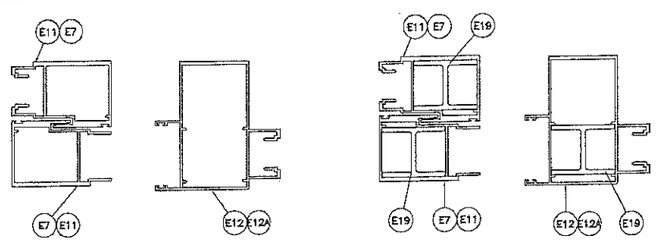

INTERLOCKS W/O REINF. | ASTRAGAL W/O REINF. | INTERLOCKS WITH REINF. | ASTRAGAL WITH REINF.

$$\text{AVERAGE PANEL WIDTH} = \frac{\text{DOOR FRAME WIDTH}}{\text{NUMBER OF PANELS}}$$

DOOR HEIGHT AND WIDTH SIZE MUST COMPLY EGRESS REQUIREMENTS PER FBC AS REQUIRED.

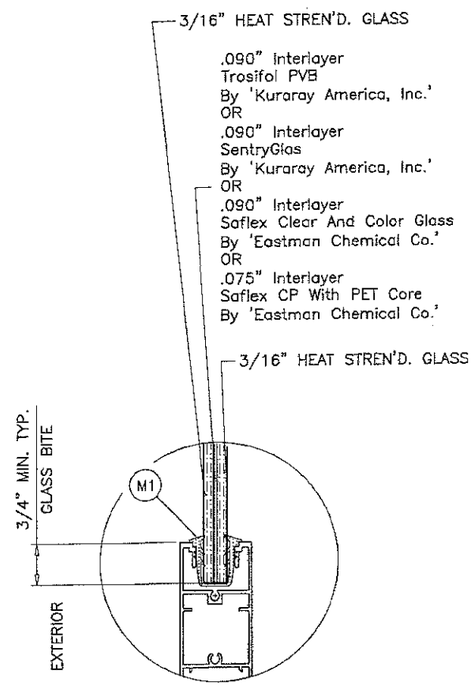

GLASS TYPE 'A'
7/16" OVERALL LAM. GLASS

NOTE:
FOR SENTRYGLAS INTERLAYER
LIMIT MAX. D.L.O. AREA TO 25.7 SQ. FT.

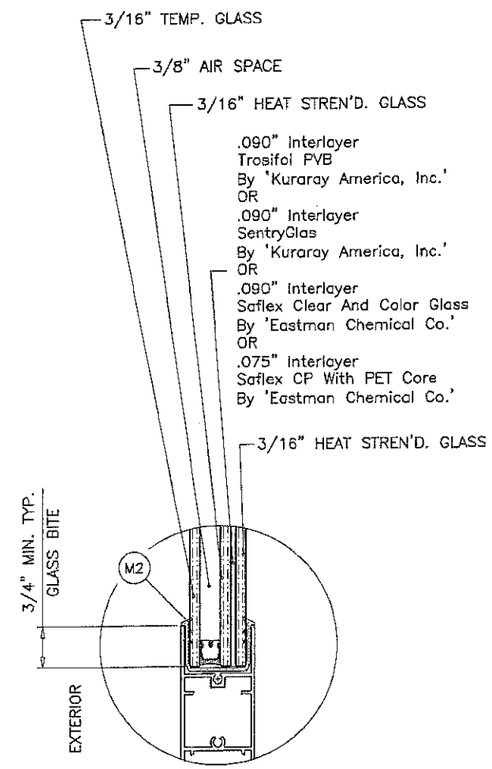

GLASS TYPE 'A1'
1" OVERALL INSUL. LAM. GLASS

NOTE:
FOR SENTRYGLAS INTERLAYER
AND SALEX CP INTERLAYER
LIMIT MAX. D.L.O. AREA TO 25.7 SQ. FT.

GLAZING OPTIONS

NOTE:
GLASS CAPACITIES ON THIS SHEET ARE BASED ON ASTM E1300–09 (3 SEC. GUSTS) AND FLORIDA BUILDING COMMISSION DECLARATORY STATEMENT DCA05–DEC–219

3/8" AIR SPACE CONSISTING OF:
SPACER:
'HELIMA' LOW PROFILE ALUMINUM SPACER BY 'LINGERMANN GMBH' AROUND THE PERIMETER OF THE GLASS.
PERIMETER SEALANT:
SILICONE
DOW CORNING 791
GE 2000

SEE CHART ABOVE FOR DESIGN LOAD CAPACITY OF DESIRED GLASS SIZE AND REINFORCING TYPES.

SEE CHART ON SHEET 6 FOR HEAD ANCHOR CAPACITY.

LOWER DESIGN PRESSURES FROM DESIGN LOAD CHART OR HEAD ANCHOR CHART WILL APPLY TO ENTIRE SYSTEM.

JUL 12 2017

PRODUCT APPROVED
as complying with the Florida Building Code
NOA-No. 16-0617.02
Approval Date 07/20/2017
By
Miami-Dade Product Control

JAWAD AHMAD
LICENSE
No. 70592
STATE OF FLORIDA
PROFESSIONAL ENGINEER

AL-FAROOQ CORPORATION
ENGINEERS & PRODUCT DEVELOPMENT
9360 SUNSET DRIVE, SUITE 220
MIAMI, FLORIDA 33173 (C.A.N. 3538)
TEL. (305) 264-8100 FAX. (305) 262-6978

COMP–ANL\W16–73ES

ES–EL400 ALUM SLIDING GLASS DOOR (L.M.I.)

E.S. WINDOWS, LLC
3550 N.W. 49 STREET
MIAMI, FL. 33142
TEL. (305) 638–5151 FAX. (305) 638–5158

revisions:			
no	date	by	description
A	07.12.17		REV. PER RER COMMENTS

date: 11–28–16
scale: 3/8" = 1"
dr. by: TARIQ
chk. by:

drawing no. W16–73

HEAD ANCHOR LOAD CAPACITY - PSF

AVERAGE PANEL WIDTH INCHES	DOOR FRAME HEIGHT INCHES	ANCHOR TYPES 'A' & 'B'					ANCHOR TYPE 'C'	
		1/4" MAX. SHIM	3/8" MAX. SHIM		1/2" MAX. SHIM		3/8" MAX. SHIM	
		4 ANCHORS AT MTG. STILE ENDS	4 ANCHORS AT MTG. STILE ENDS	6 ANCHORS AT MTG. STILE ENDS	4 ANCHORS AT MTG. STILE ENDS	6 ANCHORS AT MTG. STILE ENDS	4 ANCHORS AT MTG. STILE ENDS	6 ANCHORS AT MTG. STILE ENDS
		EXT. (+) INT. (-)	EXT. (+) INT. (-)	EXT. (+) INT. (-)	EXT. (+) INT. (-)	EXT. (+) INT. (-)	EXT. (+) INT. (-)	EXT. (+) INT. (-)
30	82	80.0	80.0	80.0	80.0	80.0	80.0	80.0
36		80.0	80.0	80.0	80.0	80.0	80.0	80.0
42		80.0	80.0	80.0	78.3	80.0	80.0	80.0
47-1/4		80.0	80.0	80.0	69.6	80.0	80.0	80.0
48		80.0	80.0	80.0	68.5	80.0	80.0	80.0
54		80.0	78.3	80.0	60.9	80.0	72.7	80.0
60		80.0	70.5	80.0	54.8	73.1	65.4	80.0
30	84	80.0	80.0	80.0	80.0	80.0	80.0	80.0
36		80.0	80.0	80.0	80.0	80.0	80.0	80.0
42		80.0	80.0	80.0	76.5	80.0	80.0	80.0
47-1/4		80.0	80.0	80.0	68.0	80.0	80.0	80.0
48		80.0	80.0	80.0	66.9	80.0	79.8	80.0
54		80.0	76.5	80.0	59.5	79.3	71.0	80.0
60		80.0	68.8	80.0	53.5	71.4	63.9	80.0
30	90	80.0	80.0	80.0	80.0	80.0	80.0	80.0
36		80.0	80.0	80.0	80.0	80.0	80.0	80.0
42		80.0	80.0	80.0	71.4	80.0	80.0	80.0
47-1/4		80.0	80.0	80.0	63.4	80.0	75.7	80.0
48		80.0	80.0	80.0	62.4	80.0	74.5	80.0
54		80.0	71.4	80.0	55.5	74.0	66.2	80.0
30	96	80.0	80.0	80.0	80.0	80.0	80.0	80.0
36		80.0	80.0	80.0	78.1	80.0	80.0	80.0
42		80.0	80.0	80.0	66.9	80.0	79.8	80.0
47-1/4		80.0	76.5	80.0	59.5	79.3	71.0	80.0
48		60.0	60.0	60.0	58.5	60.0	60.0	60.0
30	102	60.0	60.0	60.0	60.0	60.0	60.0	60.0
36		60.0	60.0	60.0	60.0	60.0	60.0	60.0
42		60.0	60.0	60.0	60.0	60.0	60.0	60.0
47-1/4		60.0	60.0	60.0	56.0	60.0	60.0	60.0
48		60.0	60.0	60.0	55.1	60.0	60.0	60.0
30	108	60.0	60.0	60.0	60.0	60.0	60.0	60.0
36		60.0	60.0	60.0	60.0	60.0	60.0	60.0
42		60.0	60.0	60.0	59.5	60.0	60.0	60.0
47-1/4		60.0	60.0	60.0	52.9	60.0	60.0	60.0

SEE CHART ON SHEET 5 FOR DESIGN LOAD CAPACITY OF DESIRED GLASS SIZE AND REINFORCING TYPES.

SEE CHART ABOVE FOR HEAD ANCHOR CAPACITY.

LOWER DESIGN PRESSURES FROM DESIGN LOAD CHART OR HEAD ANCHOR CHART WILL APPLY TO ENTIRE SYSTEM.

JUL 12 2017

PRODUCT APPROVED
as complying with the Florida Building Code
NOA-No. 16-0617.02
Approval Date 07/20/2017
By
Miami-Dade Product Control

JAVAD AHMAD
LICENSE
No. 70592
STATE OF FLORIDA
PROFESSIONAL ENGINEER

AL-FAROOQ CORPORATION
ENGINEERS & PRODUCT DEVELOPMENT
9360 SUNSET DRIVE, SUITE 220
MIAMI, FLORIDA 33173 (C.A.N. 3538)
TEL. (305) 264-8100 FAX. (305) 262-6978

COMP-ANL\W16-73ES

ES-EL400 ALUM SLIDING GLASS DOOR (L.M.I.)

E.S. WINDOWS, LLC
3550 N.W. 49 STREET
MIAMI, FL. 33142
TEL. (305) 638-5151 FAX. (305) 638-5158

revisions:

no	date	by	description
A	07.12.17		REV. PER RER COMMENTS

date: 11-28-16
scale: -
dr. by: TARIQ
chk. by:

drawing no. W16-73

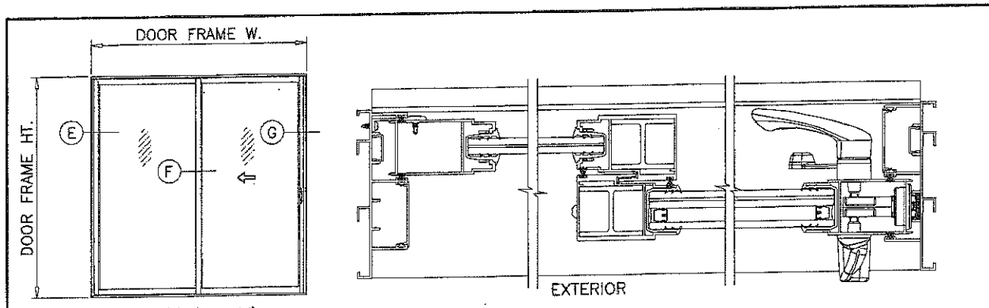

OX (SHOWN)
XO

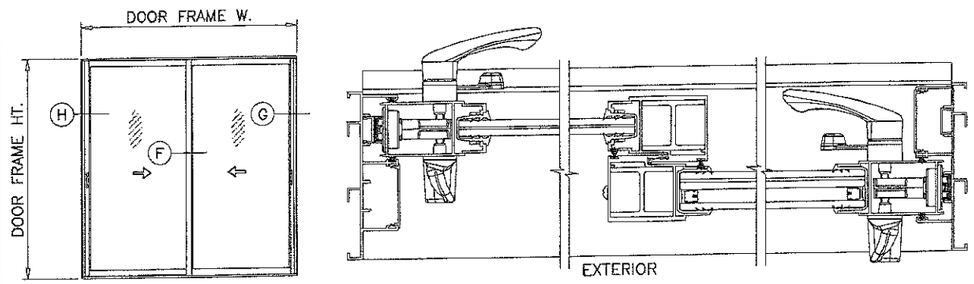

XX (SHOWN)

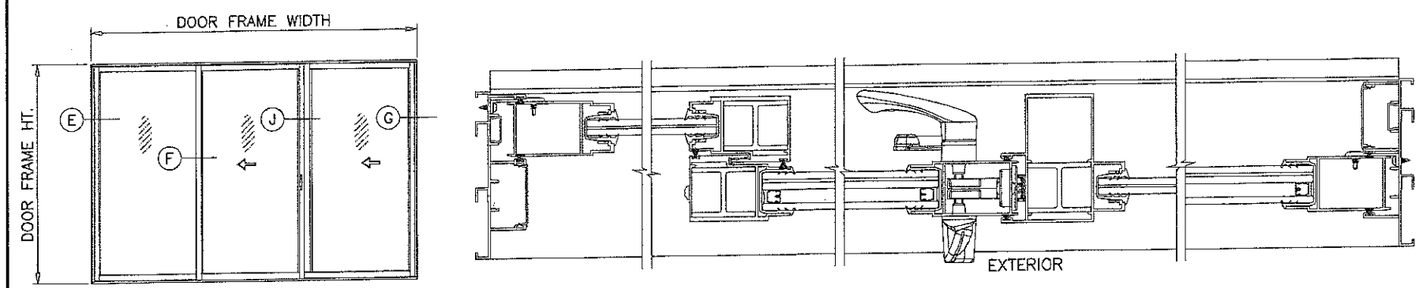

OX–O (SHOWN)
O–XO

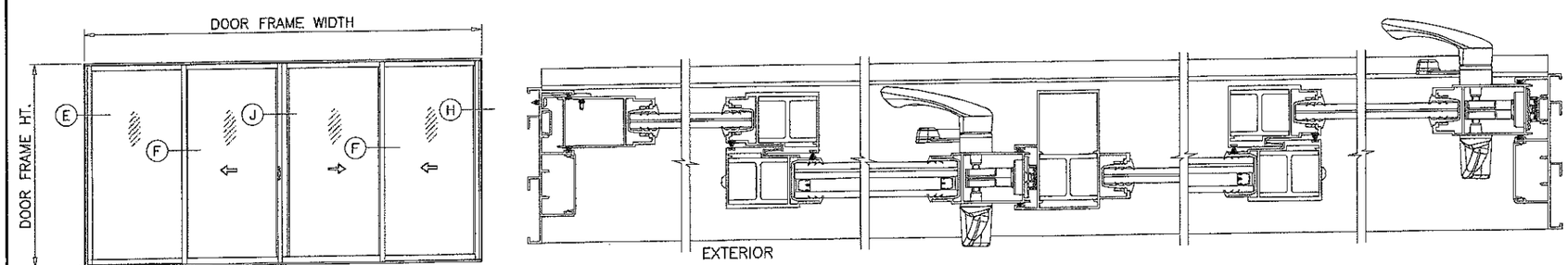

OX–XX (SHOWN)
XX–XO
OX–XO
XX–XX

APPROVED CONFIGURATIONS
NON–POCKETED DOORS
TWO (2) TRACKS

NOTE:
1. CONFIGURATIONS SHOWN FOR ILLUSTRATION PURPOSES ONLY.
2. FOR APPLICABLE DESIGN PRESSURES SEE SHEET 5.
3. FOR ANCHOR DETAILS SEE SHEETS 14 THRU 19.

JUL 12 2017

PRODUCT APPROVED
as complying with the Florida Building Code
NOA-No. 16-0617.02
Approval Date 07/20/2017
By
Miami-Dade Product Control

JAVAD AHMAD
LICENSE
No. 70592
STATE OF FLORIDA
PROFESSIONAL ENGINEER

AL-FAROOQ CORPORATION
ENGINEERS & PRODUCT DEVELOPMENT
9360 SUNSET DRIVE, SUITE 220
MIAMI, FLORIDA 33173 (C.A.N. 3538)
TEL. (305) 264-8100 FAX. (305) 262-6978
COMP–ANL\W16–73ES

ES–EL400 ALUM SLIDING GLASS DOOR (L.M.I.)

E.S. WINDOWS, LLC
3550 N.W. 49 STREET
MIAMI, FL. 33142
TEL. (305) 638–5151 FAX. (305) 638–5158

revisions:

no	date	by	description
A	07.12.17		NO CHANGE THIS SHEET

date: 11–28–16
scale: –
dr. by: TARIQ
chk. by:

drawing no. W16–73

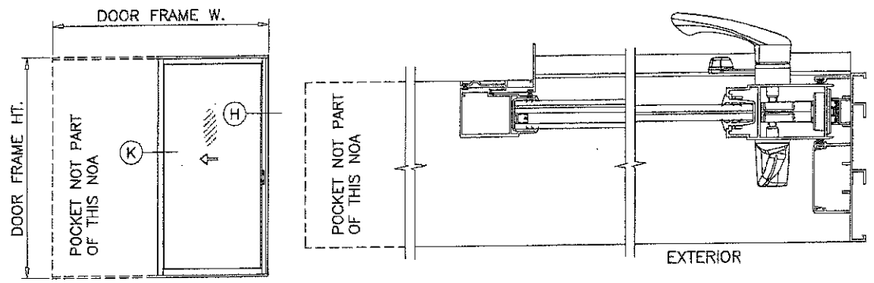

PX (SHOWN)
XP

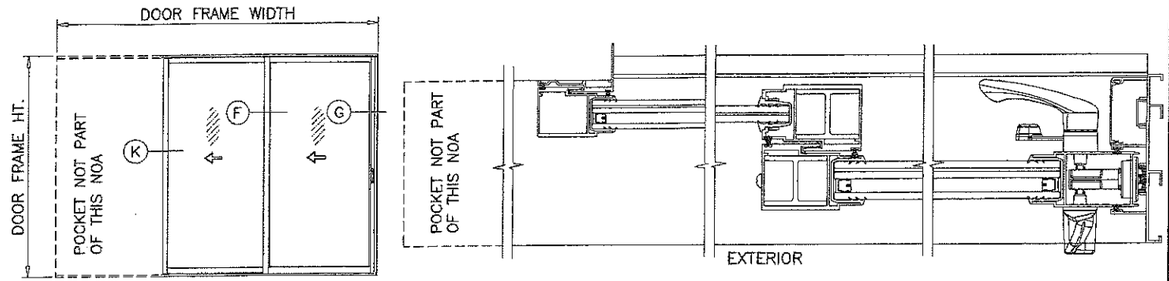

PXX (SHOWN)
XXP

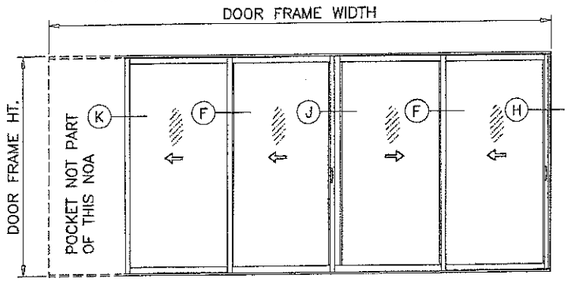

PXX–XX (SHOWN)
XX–XXP

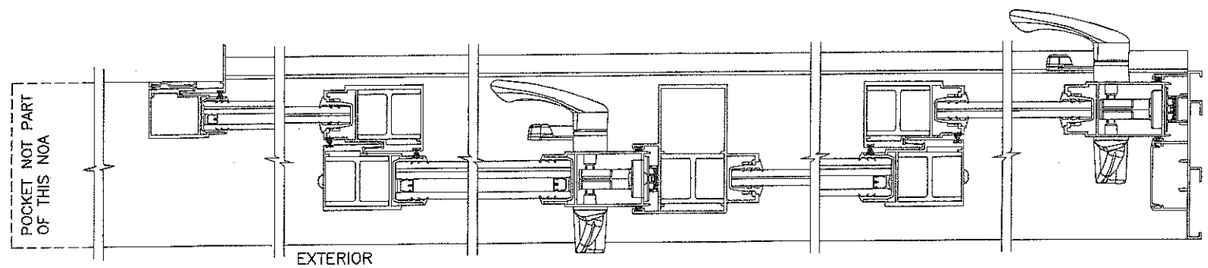

NOTE:

1. CONFIGURATIONS SHOWN FOR ILLUSTRATION PURPOSES ONLY.
2. FOR APPLICABLE DESIGN PRESSURES SEE SHEET 5.
3. FOR ANCHOR DETAILS SEE SHEETS 14 THRU 19.

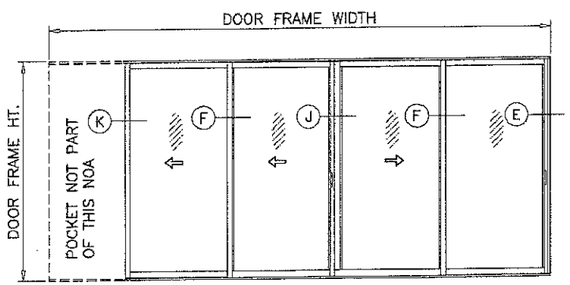

PXX–XO (SHOWN)
OX–XXP

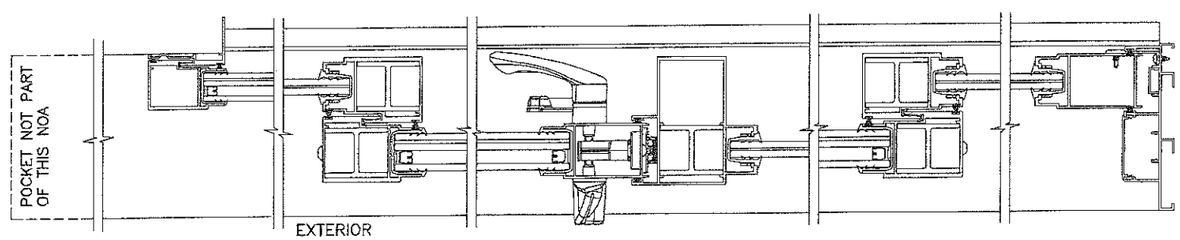

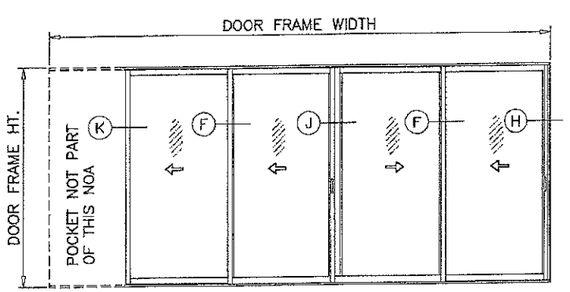

PXX–XX (SHOWN)
XX–XXP
PXX–XXP

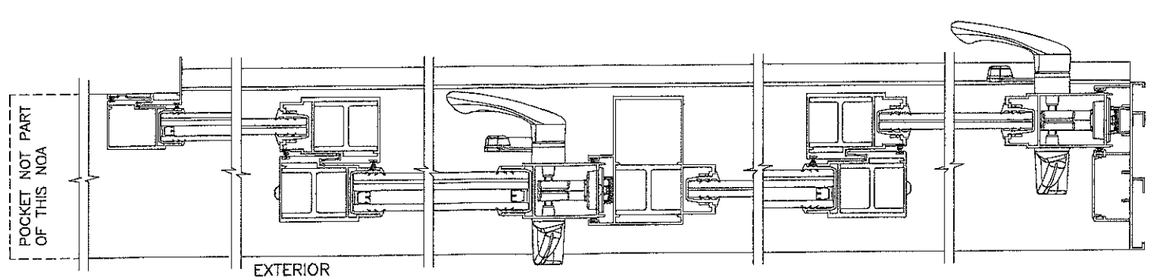

APPROVED CONFIGURATIONS
POCKETED DOORS
TWO (2) TRACKS

PRODUCT APPROVED
as complying with the Florida Building Code
NOA-No. 16-0617.02
Approval Date 07/20/2017
By
Miami-Dade Product Control

JUL 12 2017

JAVAD AHMAD
LICENSE
No. 70592
STATE OF FLORIDA
PROFESSIONAL ENGINEER

AL-FAROOQ CORPORATION
ENGINEERS & PRODUCT DEVELOPMENT
9360 SUNSET DRIVE, SUITE 220
MIAMI, FLORIDA 33173 (C.A.N. 3538)
TEL. (305) 264-8100 FAX. (305) 262-6978
COMP–ANL\W16–73ES

ES–EL400 ALUM SLIDING GLASS DOOR (L.M.I.)

E.S. WINDOWS, LLC
3550 N.W. 49 STREET
MIAMI, FL. 33142
TEL. (305) 638–5151 FAX. (305) 638–5158

revisions:

no	date	by	description
A	07.12.17		NO CHANGE THIS SHEET

date: 11–28–16
scale: –
dr. by: TARIQ
chk. by:

drawing no.
W16–73

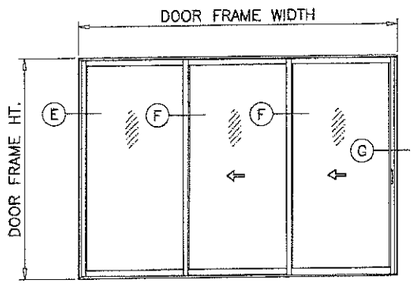

OXX (SHOWN)
XXO

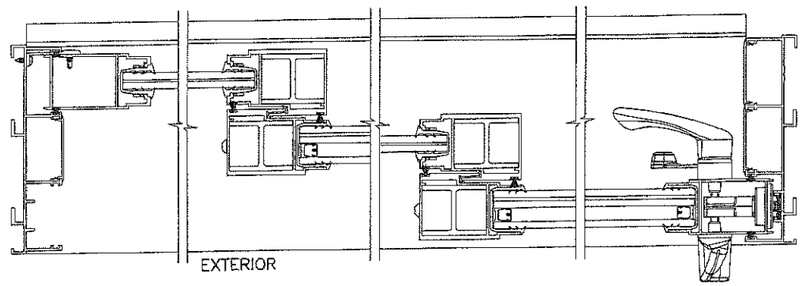

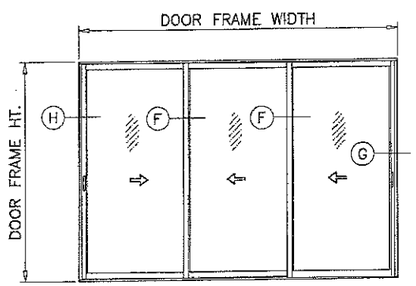

XXX (SHOWN)

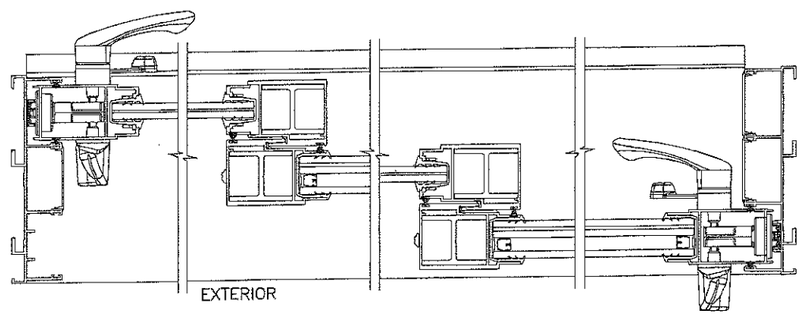

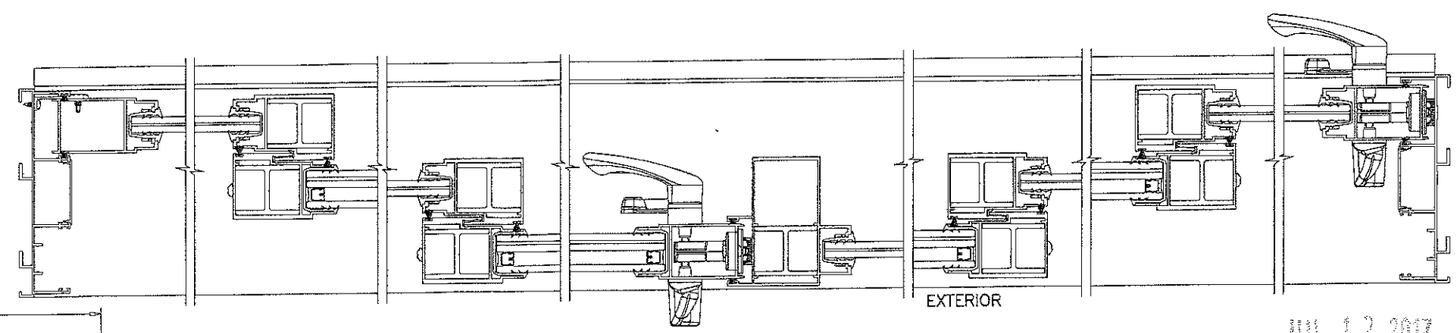

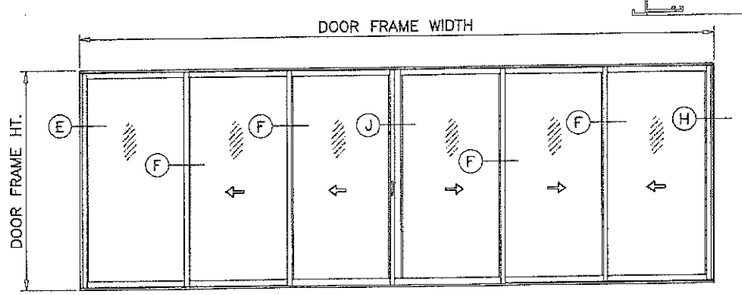

OXX--XXX (SHOWN)
XXX-XXO
OXX-XXO
XXX-XXX

NOTE:

1. CONFIGURATIONS SHOWN FOR ILLUSTRATION PURPOSES ONLY.
2. FOR APPLICABLE DESIGN PRESSURES AND REINFORCEMENTS REQUIREMENTS SEE SHEET 5.
3. FOR ANCHOR DETAILS SEE SHEETS 14 THRU 19.

JUL 12 2017

PRODUCT APPROVED
as complying with the Florida Building Code
NOA-No. 16-0617.02
Approval Date 07/20/2017
By
Miami-Dade Product Control

JAVAD AHMAD
LICENSE
No. 70592
STATE OF FLORIDA
PROFESSIONAL ENGINEER

APPROVED CONFIGURATIONS
NON-POCKETED DOORS
THREE (3) TRACKS

AL-FAROOQ CORPORATION
ENGINEERS & PRODUCT DEVELOPMENT
9360 SUNSET DRIVE, SUITE 220
MIAMI, FLORIDA 33173 (C.A.N. 3538)
TEL. (305) 264-8100 FAX. (305) 262-6978
COMP-ANL\W16-73ES

ES-EL400 ALUM SLIDING GLASS DOOR (L.M.I.)

E.S. WINDOWS, LLC
3550 N.W. 49 STREET
MIAMI, FL. 33142
TEL. (305) 638-5151 FAX. (305) 638-5158

revisions:

no	date	by	description
A	07.12.17		NO CHANGE THIS SHEET

date: 11-28-16
scale: -
dr. by: TARIQ
chk. by:

drawing no.
W16-73

sheet 9 of 23

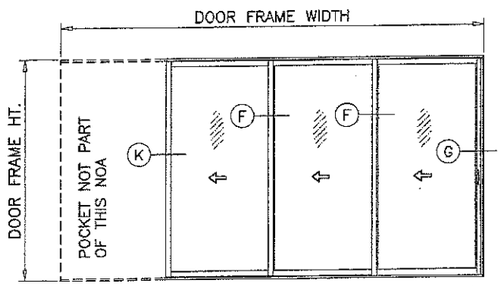

PXXX (SHOWN)
XXXP

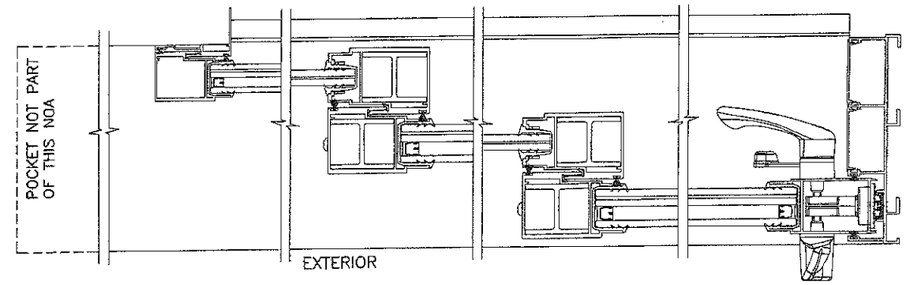

NOTE:

1. CONFIGURATIONS SHOWN FOR ILLUSTRATION PURPOSES ONLY.
2. FOR APPLICABLE DESIGN PRESSURES AND REINFORCEMENTS REQUIREMENTS SEE SHEET 5.
3. FOR ANCHOR DETAILS SEE SHEETS 14 THRU 19.

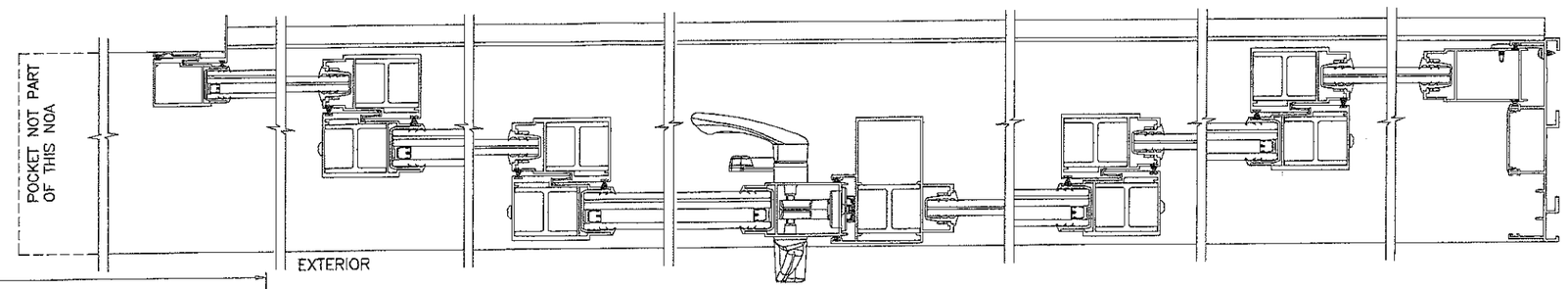

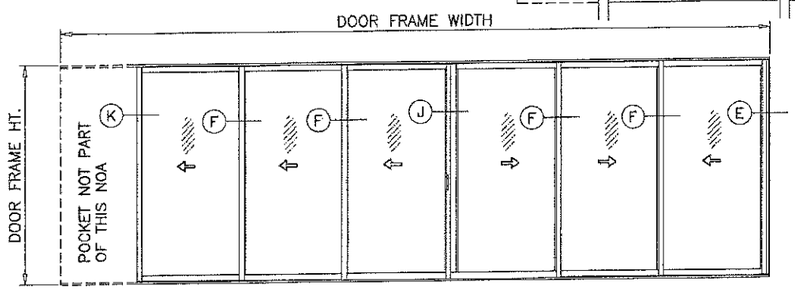

PXXX–XXO (SHOWN)
OXX–XXXP

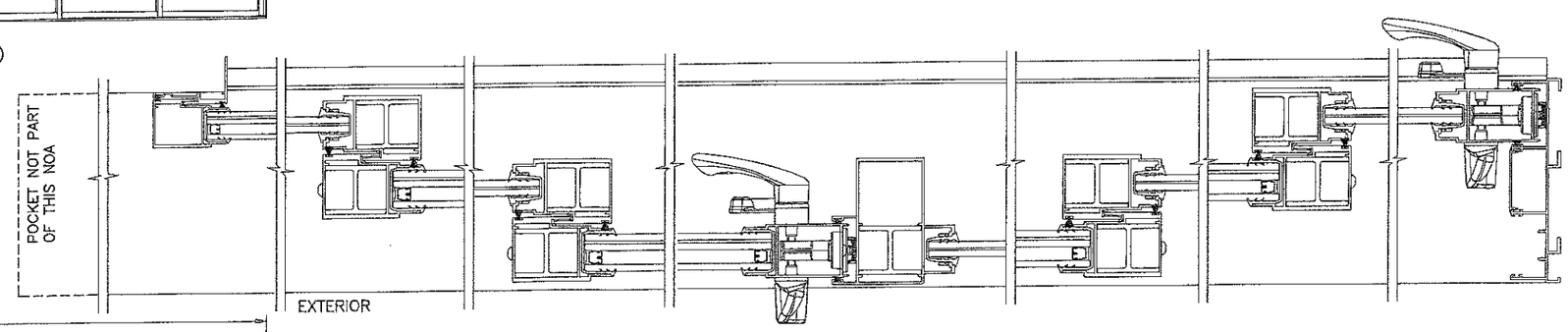

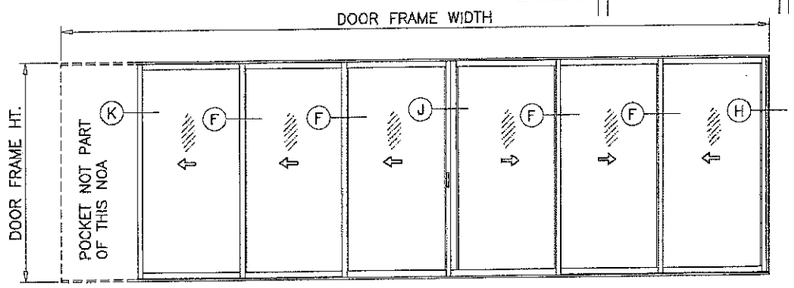

PXXX–XXX (SHOWN)
XXX–XXXP
PXXX–XXXP

APPROVED CONFIGURATIONS
POCKETED DOORS
THREE (3) TRACKS

PRODUCT APPROVED
as complying with the Florida Building Code
NOA-No. 16-0617.02
Approval Date 07/20/2017
By
Miami-Dade Product Control

JAVAD AHMAD
LICENSE
No. 70592
STATE OF FLORIDA
PROFESSIONAL ENGINEER

AL-FAROOQ CORPORATION
ENGINEERS & PRODUCT DEVELOPMENT
9360 SUNSET DRIVE, SUITE 220
MIAMI, FLORIDA 33173 (C.A.N. 3538)
TEL. (305) 264-8100 FAX. (305) 262-6978

COMP–ANL\W16–73ES

ES–EL400 ALUM SLIDING GLASS DOOR (L.M.I.)

E.S. WINDOWS, LLC
3550 N.W. 49 STREET
MIAMI, FL. 33142
TEL. (305) 638–5151 FAX. (305) 638–5158

revisions:

no	date	by	description
A	07.12.17		NO CHANGE THIS SHEET

date: 11–28–16
scale: –
dr. by: TARIQ
chk. by:

drawing no.
W16–73

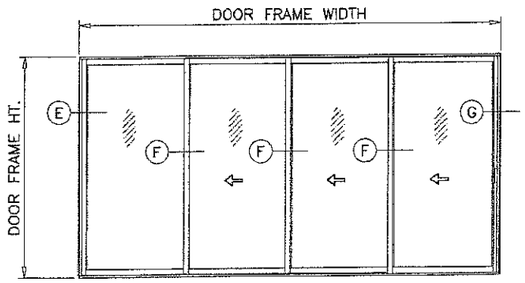

OXXX (SHOWN)
XXXO

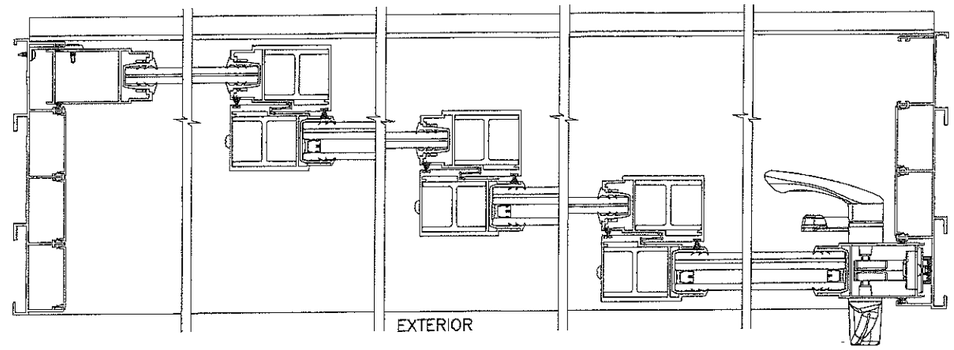

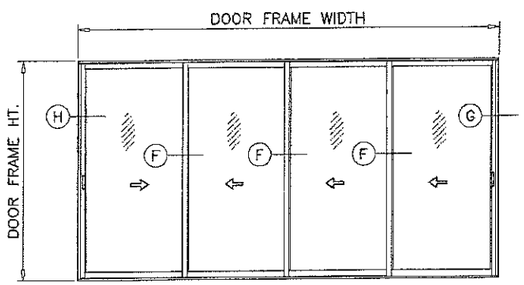

XXXX (SHOWN)

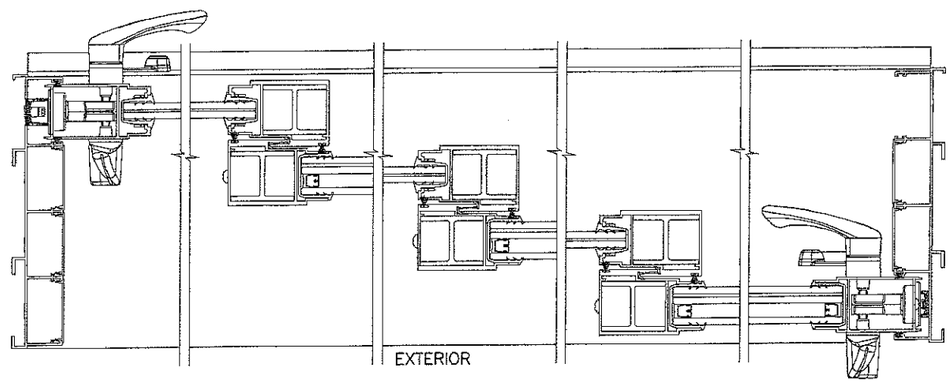

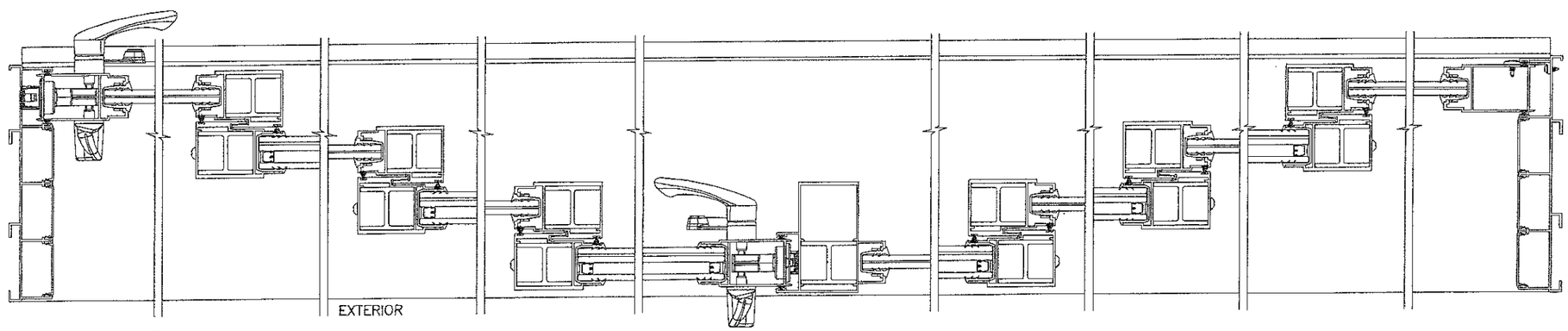

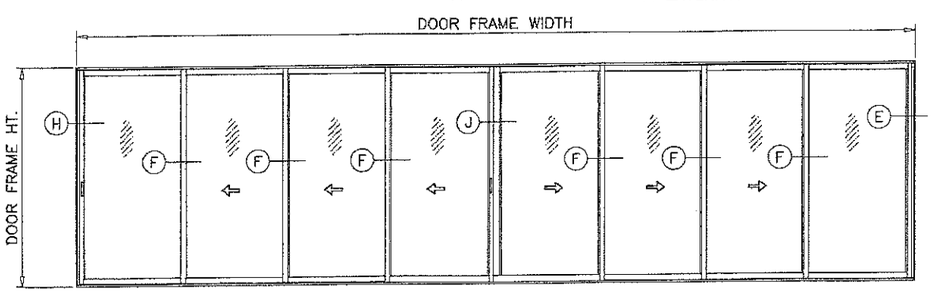

XXXX–XXXO (SHOWN)
OXXX–XXXX
OXXX–XXXO
XXXX–XXXX

NOTE:

1. CONFIGURATIONS SHOWN FOR ILLUSTRATION PURPOSES ONLY.
2. FOR APPLICABLE DESIGN PRESSURES AND REINFORCEMENTS REQUIREMENTS SEE SHEET 5.
3. FOR ANCHOR DETAILS SEE SHEETS 14 THRU 19.

APPROVED CONFIGURATIONS
NON--POCKETED DOORS
FOUR (4) TRACKS

JUL 12 2017

PRODUCT APPROVED
as complying with the Florida Building Code
NOA-No. 16-0617.02
Approval Date 07/20/2017
By
Miami-Dade Product Control

JAVAD AHMAD
LICENSE
No. 70592
STATE OF FLORIDA
PROFESSIONAL ENGINEER

AL-FAROOQ CORPORATION
ENGINEERS & PRODUCT DEVELOPMENT
9360 SUNSET DRIVE, SUITE 220
MIAMI, FLORIDA 33173 (C.A.N. 3538)
TEL. (305) 264-8100 FAX. (305) 262-6978

COMP-ANL\W16-73ES

ES-EL400 ALUM SLIDING GLASS DOOR (L.M.I.)

E.S. WINDOWS, LLC
3550 N.W. 49 STREET
MIAMI, FL. 33142
TEL. (305) 638-5151 FAX. (305) 638-5158

revisions:

no	date	by	description
A	07.12.17		NO CHANGE THIS SHEET

date: 11-28-16
scale: -
dr. by: TARIQ
chk. by:

drawing no.
W16-73

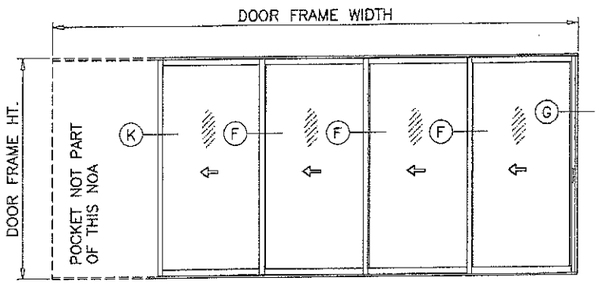

PXXXX (SHOWN)
XXXXP

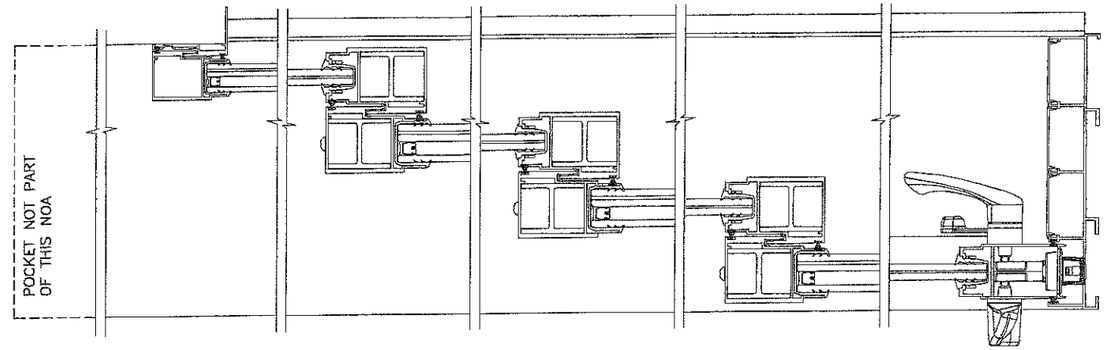

NOTE:

1. CONFIGURATIONS SHOWN FOR ILLUSTRATION PURPOSES ONLY.
2. FOR APPLICABLE DESIGN PRESSURES AND REINFORCEMENTS REQUIREMENTS SEE SHEET 5.
3. FOR ANCHOR DETAILS SEE SHEETS 14 THRU 19.

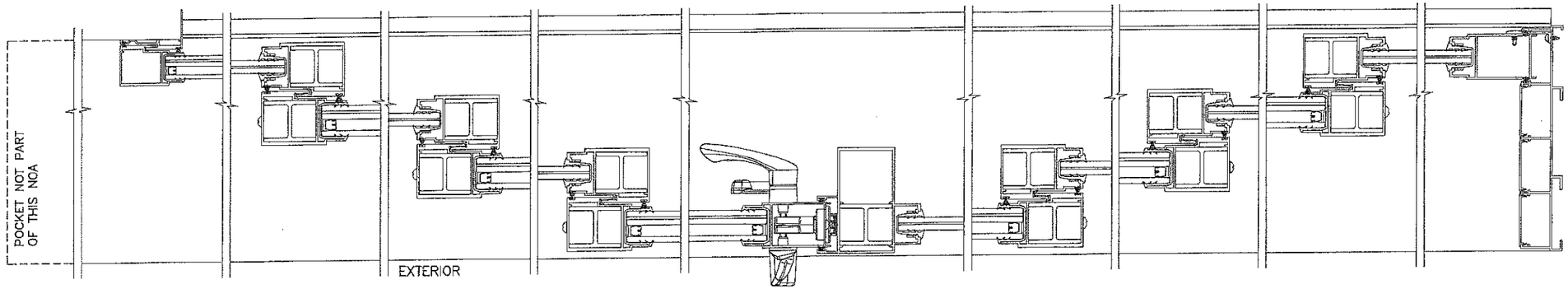

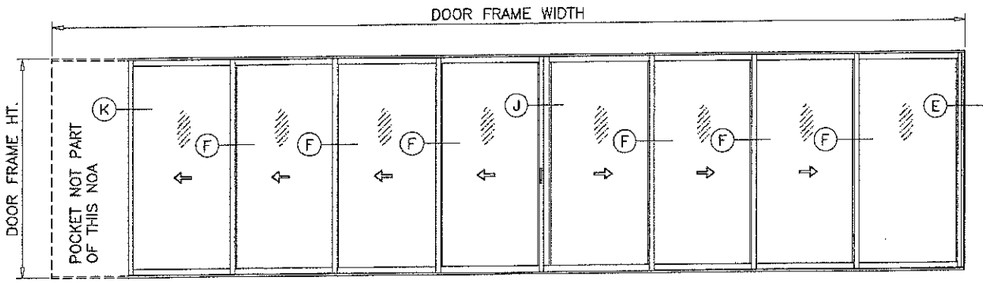

PXXXX–XXXO (SHOWN)
OXXX–XXXXP

JUL 12 2017

PRODUCT APPROVED
as complying with the Florida Building Code
NOA-No. 16-0617.02
Approval Date 07/20/2017
By
Miami-Dade Product Control

JAVAD AHMAD
LICENSE
No. 70592
STATE OF FLORIDA
PROFESSIONAL ENGINEER

APPROVED CONFIGURATIONS
POCKETED DOORS
FOUR (4) TRACKS

AL-FAROOQ CORPORATION
ENGINEERS & PRODUCT DEVELOPMENT
9360 SUNSET DRIVE, SUITE 220
MIAMI, FLORIDA 33173 (C.A.N. 3538)
TEL. (305) 264-8100 FAX. (305) 262-6978

COMP-ANL\W16-73ES

ES-EL400 ALUM SLIDING GLASS DOOR (L.M.I.)

E.S. WINDOWS, LLC
3550 N.W. 49 STREET
MIAMI, FL. 33142
TEL. (305) 638-5151 FAX. (305) 638-5158

revisions:

no	date	by	description
A	07.12.17		NO CHANGE THIS SHEET

date: 11-28-16
scale: -
dr. by: TARIQ
chk. by:

drawing no.
W16-73

NOTE:

1. CONFIGURATIONS SHOWN FOR ILLUSTRATION PURPOSES ONLY.
2. FOR APPLICABLE DESIGN PRESSURES AND REINFORCEMENTS REQUIREMENTS SEE SHEET 5.
3. FOR ANCHOR DETAILS SEE SHEETS 14 THRU 19.

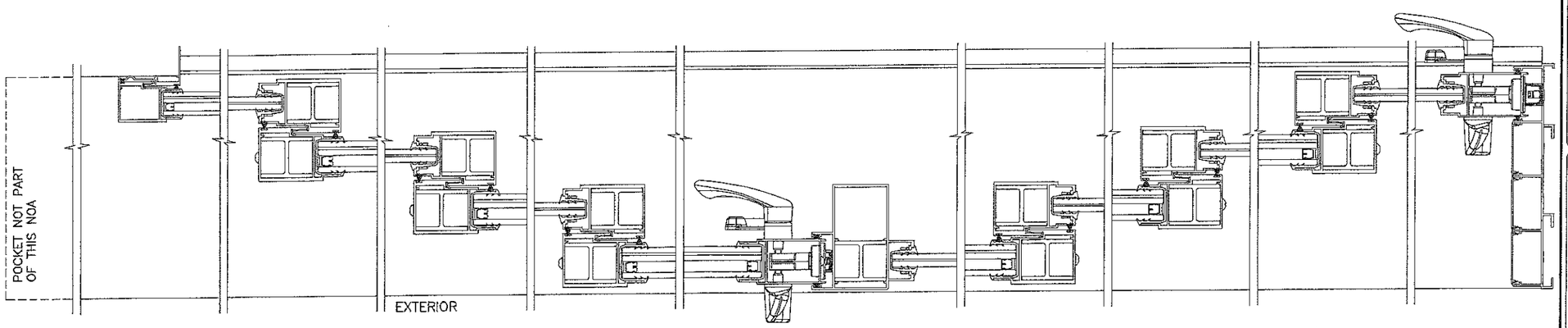

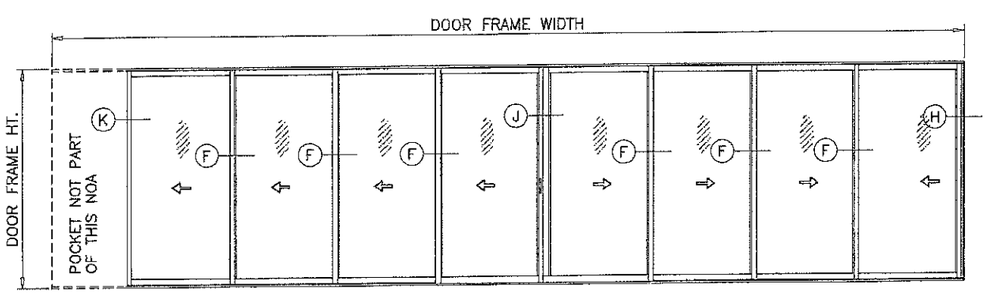

PXXXX–XXXX (SHOWN)
XXXX–XXXXP
PXXXX–XXXXP

APPROVED CONFIGURATIONS
POCKETED DOORS
FOUR (4) TRACKS

JUL 12 2017

PRODUCT APPROVED
as complying with the Florida Building Code
NOA-No. 16-0617.02
Approval Date 07/20/2017
By
Miami-Dade Product Control

JAVAD AHMAD
LICENSE
No. 70592
STATE OF FLORIDA
PROFESSIONAL ENGINEER

ES-EL400 ALUM SLIDING GLASS DOOR (L.M.I.)

E.S. WINDOWS, LLC
3550 N.W. 49 STREET
MIAMI, FL. 33142
TEL. (305) 638-5151 FAX. (305) 638-5158

AL-FAROOQ CORPORATION
ENGINEERS & PRODUCT DEVELOPMENT
9360 SUNSET DRIVE, SUITE 220
MIAMI, FLORIDA 33173 (C.A.N. 3538)
TEL. (305) 264-8100 FAX. (305) 262-6978
COMP-ANL\W16-73ES

revisions:

no	date	by	description
A	07.12.17		NO CHANGE THIS SHEET

date: 11-28-16
scale: –
dr. by: TARIQ
chk. by:

drawing no. W16-73

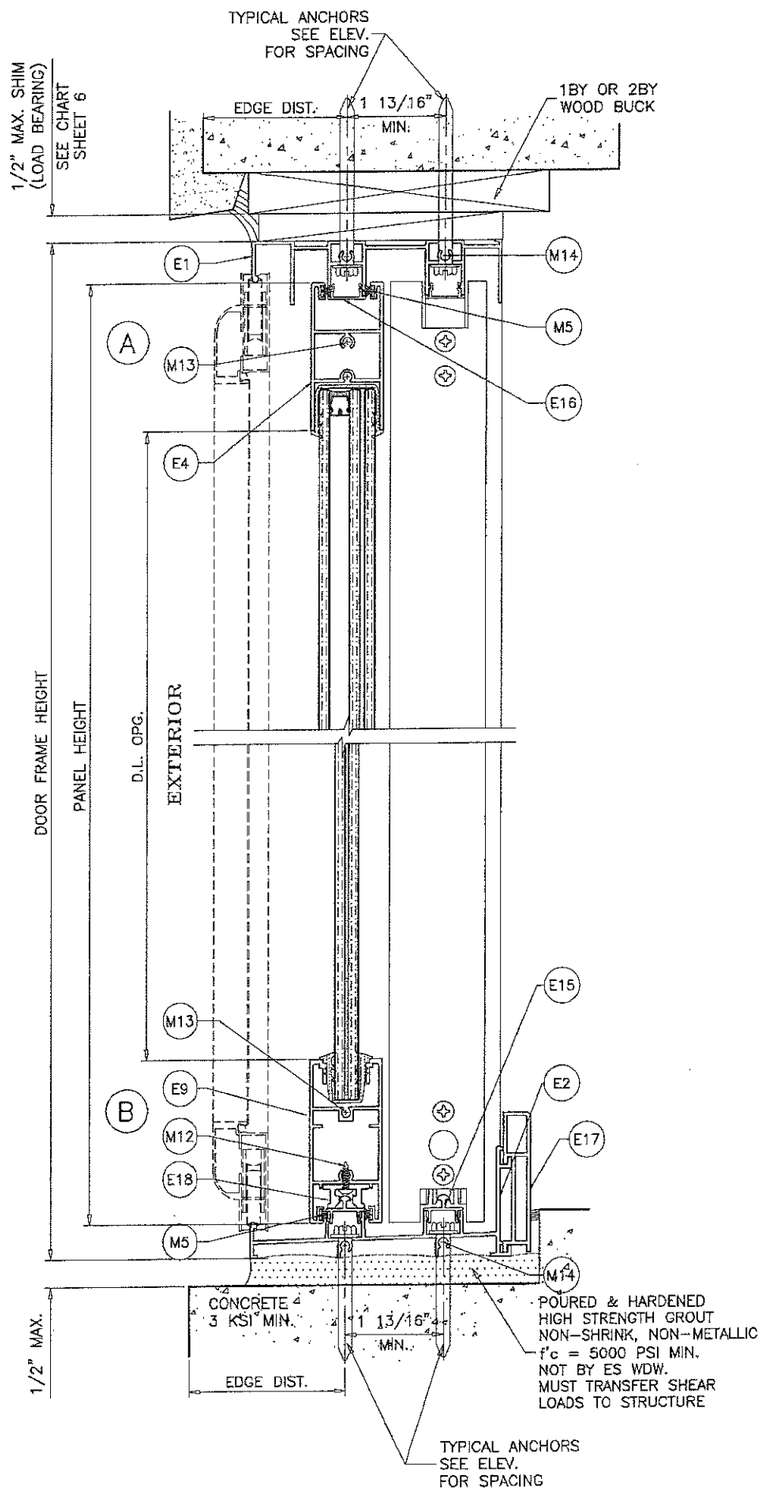

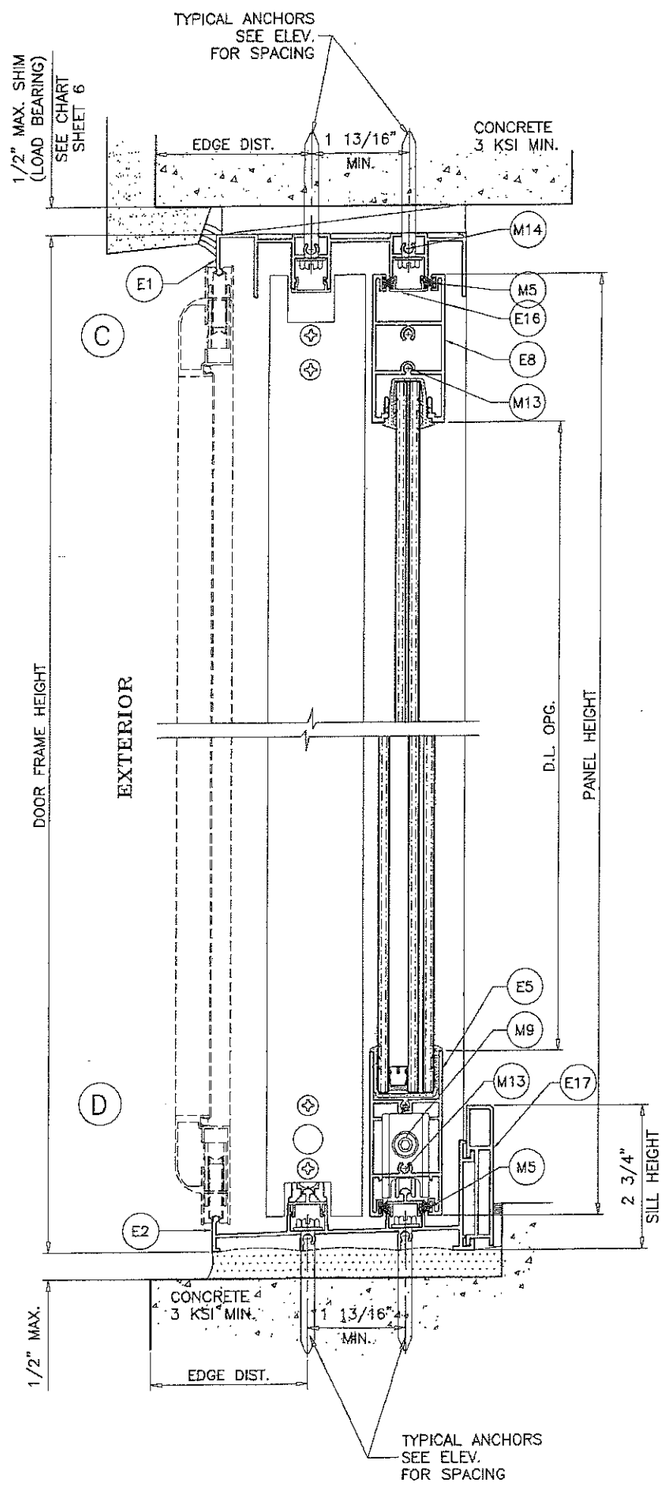

PRODUCT APPROVED
as complying with the Florida Building Code
NOA-No. 16-0617.02
Approval Date 07/20/2017
By
Miami-Dade Product Control

JUL 12 2017

JAVAD AHMAD
LICENSE
No. 70592
STATE OF FLORIDA
PROFESSIONAL ENGINEER

AL-FAROOQ CORPORATION
ENGINEERS & PRODUCT DEVELOPMENT
9360 SUNSET DRIVE, SUITE 220
MIAMI, FLORIDA 33173 (C.A.N. 3538)
TEL. (305) 264-8100 FAX. (305) 262-6978

COMP-ANL\W16-73ES

ES-EL400 ALUM SLIDING GLASS DOOR (L.M.I.)

E.S. WINDOWS, LLC
3550 N.W. 49 STREET
MIAMI, FL. 33142
TEL. (305) 638-5151 FAX. (305) 638-5158

revisions:

no	date	by	description
A	07.12.17		REV. PER RER COMMENTS

date: 11-28-16
scale: 3/8" = 1"
dr. by: TARIQ
chk. by:

drawing no. W16-73

TYPICAL ANCHORS: SEE ELEV. FOR SPACING

AT HEAD

TYPE 'A'– 1/4" DIA. ULTRACON BY 'ELCO' (Fu=177 KSI, Fy=155 KSI)
INTO WOOD STRUCTURES
2" MIN. PENETRATION INTO WOOD
THRU 1BY BUCKS INTO CONCRETE
1–3/4" MIN. EMBED INTO CONCRETE, 1–1/2" MIN. EDGE DIST.
THRU 2BY BUCKS INTO CONCRETE
1–1/2" MIN. EMBED INTO CONCRETE, 1–1/2" MIN. EDGE DIST.

TYPE 'B'– 1/4" DIA. ULTRACON BY 'ELCO' (Fu=177 KSI, Fy=155 KSI)
DIRECTLY INTO CONCRETE
2" MIN. EMBED INTO CONCRETE, 1–1/2" MIN. EDGE DIST.

TYPE 'C'– 1/4" DIA. TEKS OR SELF DRILLING SCREWS (GRADE 5 CRS)
INTO MIAMI–DADE COUNTY APPROVED MULLIONS
OR
INTO METAL STRUCTURES
(3) THREADS MIN. PENETRATION BEYOND SUBSTRATE
ALUMINUM: 1/8" THK. MIN. (6063–T5 MIN.)
STEEL: 1/8" THK. MIN. (Fy = 36 KSI MIN.)
(STEEL IN CONTACT WITH ALUMINUM TO BE PLATED OR PAINTED)

AT SILL

TYPE 'B'– 1/4" DIA. ULTRACON BY 'ELCO' (Fu=177 KSI, Fy=155 KSI)
DIRECTLY INTO CONCRETE
1–3/4" MIN. EMBED INTO CONCRETE

AT JAMBS

TYPE 'A'– 1/4" DIA. ULTRACON BY 'ELCO' (Fu=177 KSI, Fy=155 KSI)
INTO WOOD STRUCTURES
2" MIN. PENETRATION INTO WOOD
THRU 1BY OR 2BY BUCKS INTO CONC. OR FILLED BLOCK
1–1/4" MIN. EMBED INTO CONCRETE
1–1/2" MIN. EMBED INTO FILLED BLOCKS

TYPE 'B'– 1/4" DIA. ULTRACON BY 'ELCO' (Fu=177 KSI, Fy=155 KSI)
DIRECTLY INTO CONCRETE OR GROUT FILLED BLOCKS
2" MIN. EMBED INTO CONCRETE
2" MIN. EMBED INTO GROUT FILLED BLOCKS

TYPE 'C'– 1/4" DIA. TEKS OR SELF DRILLING SCREWS (GRADE 5 CRS)
INTO MIAMI–DADE COUNTY APPROVED MULLIONS
OR
INTO METAL STRUCTURES
(3) THREADS MIN. PENETRATION BEYOND SUBSTRATE
ALUMINUM: 1/8" THK. MIN. (6063–T5 MIN.)
STEEL: 1/8" THK. MIN. (Fy = 36 KSI MIN.)
(STEEL IN CONTACT WITH ALUMINUM TO BE PLATED OR PAINTED)

ANCHOR EDGE DISTANCES

INTO CONCRETE AND MASONRY = 2–1/2" MIN. (UNLESS SPECIFIED OTHERWISE)
INTO WOOD STRUCTURE = 1" MIN.
INTO METAL STRUCTURE = 3/4" MIN.

WOOD AT HEAD OR JAMBS SG = 0.55 MIN.
CONCRETE AT HEAD, SILL OR JAMBS f'c = 3000 PSI MIN.
C–90 GROUT FILLED BLOCK AT JAMBS f'm = 2000 PSI MIN.

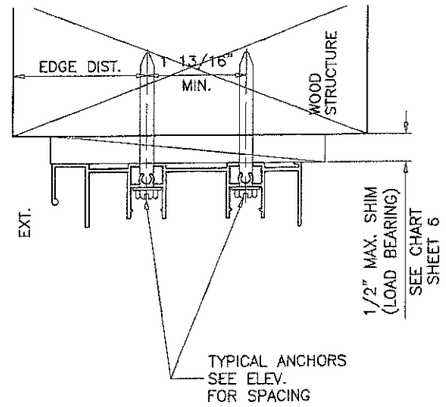

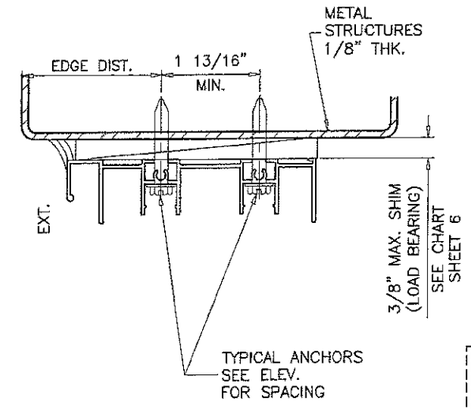

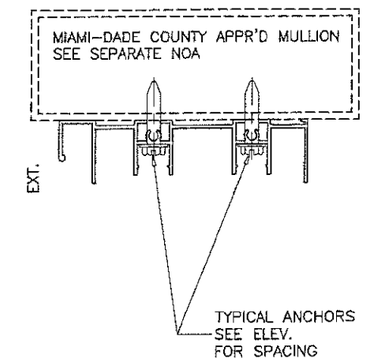

1BY OR 2BY WOOD BUCKS AND METAL STRUCTURE NOT BY E.S. WDW. MUST SUSTAIN LOADS IMPOSED BY GLAZING SYSTEM AND TRANSFER THEM TO THE BUILDING STRUCTURE.

PRODUCT APPROVED
as complying with the Florida Building Code
NOA-No. 16-0617.02
Approval Date 07/20/2017
By
Miami-Dade Product Control

JUL 1 9 2017

JAVAD AHMAD
LICENSE
No. 70592
STATE OF FLORIDA
PROFESSIONAL ENGINEER

AL-FAROOQ CORPORATION
ENGINEERS & PRODUCT DEVELOPMENT
9360 SUNSET DRIVE, SUITE 220
MIAMI, FLORIDA 33173 (C.A.N. 3538)
TEL. (305) 264-8100 FAX. (305) 262-6978

COMP–ANL\W16–73ES

ES–EL400 ALUM SLIDING GLASS DOOR (L.M.I.)

E.S. WINDOWS, LLC
3550 N.W. 49 STREET
MIAMI, FL. 33142
TEL. (305) 638–5151 FAX. (305) 638–5158

revisions:

no	date	by	description
A	07.12.17		REV. PER RER COMMENTS

date: 11–28–16
scale: 3/8" = 1"
dr. by: TARIQ
chk. by:

drawing no. W16–73

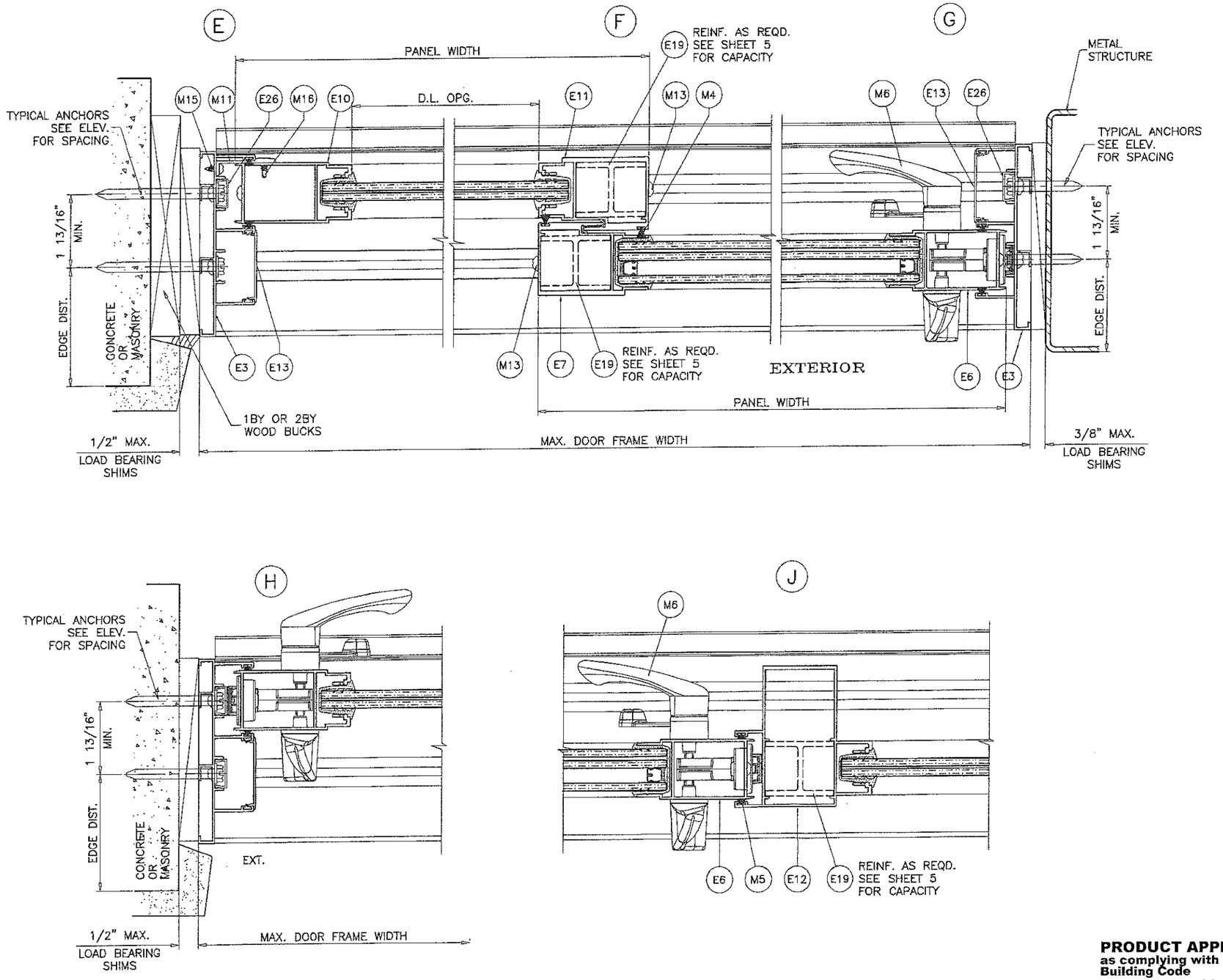

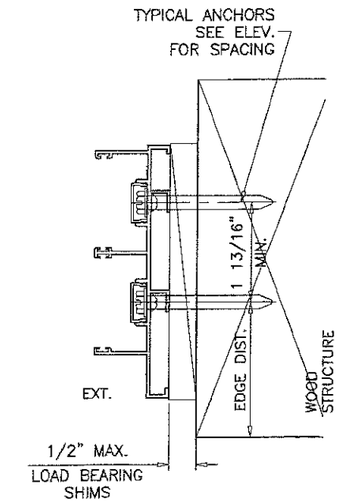

JUL 12 2017

PRODUCT APPROVED
as complying with the Florida Building Code
NOA-No. 16-0617.02
Approval Date 07/20/2017
By
Miami-Dade Product Control

JAVAD AHMAD
LICENSE
No. 70592
STATE OF FLORIDA
PROFESSIONAL ENGINEER

AL-FAROOQ CORPORATION
ENGINEERS & PRODUCT DEVELOPMENT
9360 SUNSET DRIVE, SUITE 220
MIAMI, FLORIDA 33173 (C.A.N. 3538)
TEL. (305) 264-8100 FAX. (305) 262-6978

COMP-ANL\W16-73ES

ES-EL400 ALUM SLIDING GLASS DOOR (L.M.I.)

E.S. WINDOWS, LLC
3550 N.W. 49 STREET
MIAMI, FL. 33142
TEL. (305) 638-5151 FAX. (305) 638-5158

revisions:			
no	date	by	description
A	07.12.17		REV. PER RER COMMENTS

date: 11-28-16
scale: 3/8" = 1"
dr. by: TARIQ
chk. by:

drawing no. W16-73

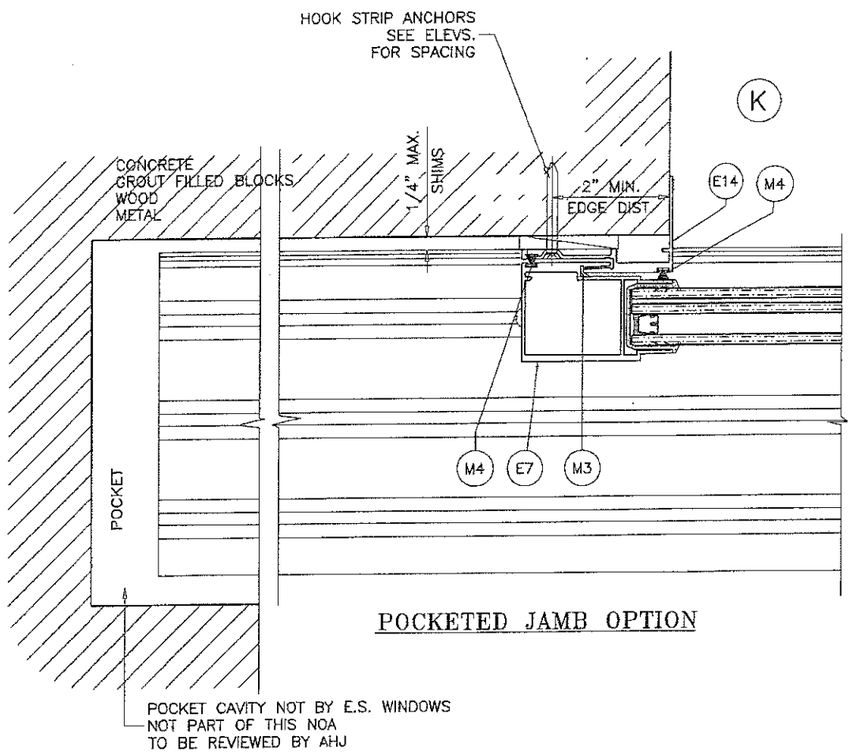

POCKETED JAMB OPTION

HOOK STRIP ANCHORS: SEE ELEV. FOR SPACING

1/4" DIA. ULTRACON BY 'ELCO' (Fu=177 KSI, Fy=155 KSI)

DIRECTLY INTO CONCRETE OR GROUT FILLED BLOCKS
1-3/4" MIN. EMBED INTO CONCRETE
2-1/4" MIN. EMBED INTO GROUT FILLED BLOCKS

#14 SMS (GRADE 2 CRS)

INTO 2BY WOOD BUCKS OR WOOD STRUCTURES
1-1/2" MIN. PENETRATION INTO WOOD

#14 SMS OR SELF DRILLING SCREWS (GRADE 2 CRS)

INTO METAL STRUCTURES
(3) THREADS MIN. PENETRATION BEYOND SUBSTRATE
ALUMINUM: 1/8" THK. MIN. (6063-T5 MIN.)
STEEL: 1/8" THK. MIN. (Fy = 36 KSI MIN.)
(STEEL IN CONTACT WITH ALUMINUM TO BE PLATED OR PAINTED)

TYPICAL EDGE DISTANCE

INTO CONCRETE AND MASONRY = 2" MIN.
INTO WOOD STRUCTURE = 1" MIN.
INTO METAL STRUCTURE = 3/4" MIN.

JUL 12 2017

PRODUCT APPROVED
as complying with the Florida Building Code
NOA-No. 16-0617.02
Approval Date 07/20/2017
By
Miami-Dade Product Control

JAVAD AHMAD
LICENSE
No. 70592
STATE OF FLORIDA
PROFESSIONAL ENGINEER

AL-FAROOQ CORPORATION
ENGINEERS & PRODUCT DEVELOPMENT
9360 SUNSET DRIVE, SUITE 220
MIAMI, FLORIDA 33173 (C.A.N. 3538)
TEL. (305) 264-8100 FAX. (305) 262-6978
COMP-ANL\W16-73ES

ES-EL400 ALUM SLIDING GLASS DOOR (L.M.I.)

E.S. WINDOWS, LLC
3550 N.W. 49 STREET
MIAMI, FL. 33142
TEL. (305) 638-5151 FAX. (305) 638-5158

(revisions:

no	date	by	description
A	07.12.17		NO CHANGE THIS SHEET

date: 11-28-16
scale: 3/8" = 1"
dr. by: TARIQ
chk. by:

drawing no.
W16-73

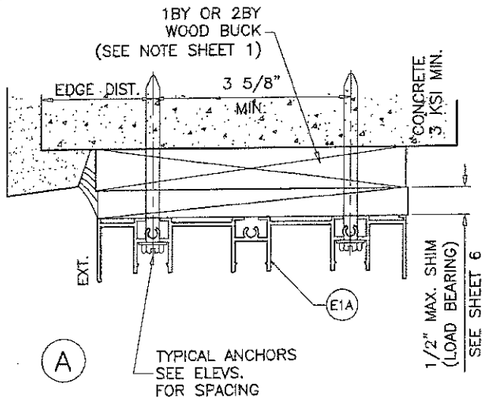

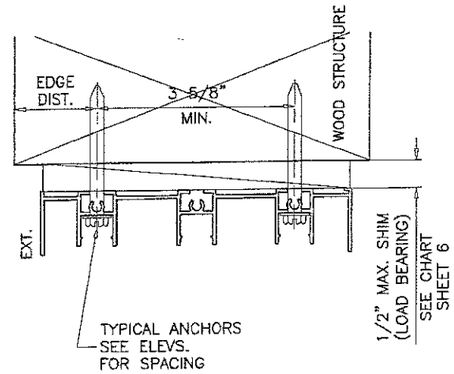

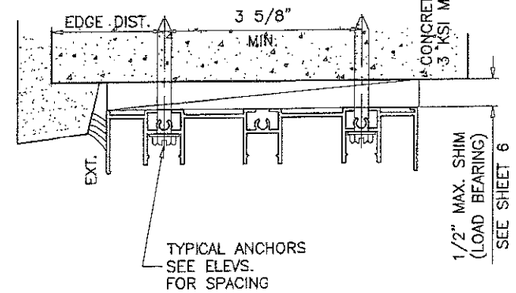

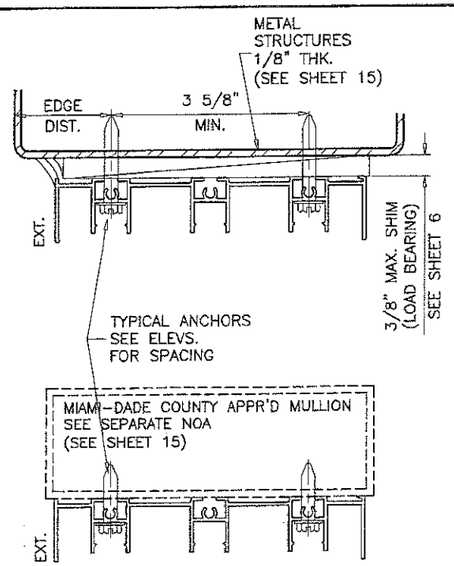

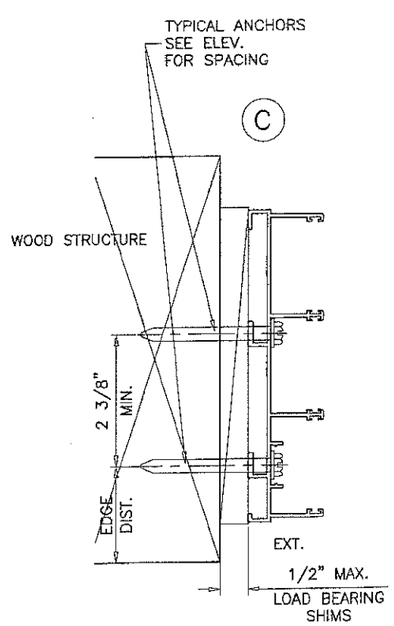

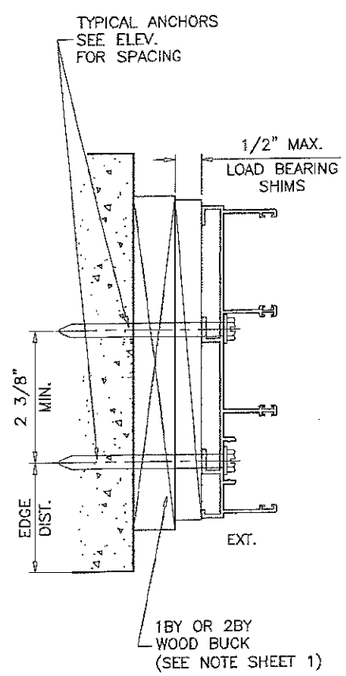

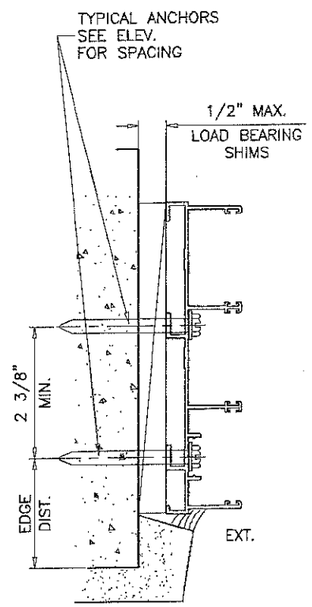

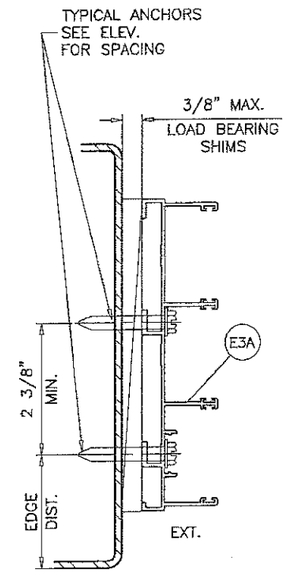

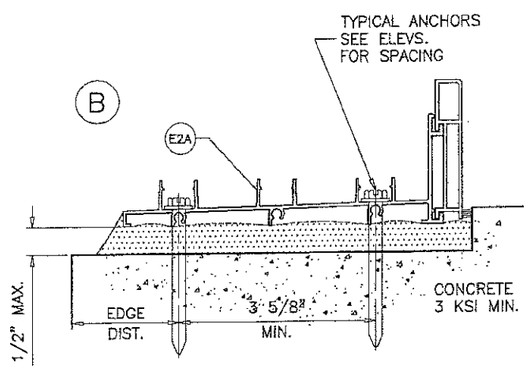

JUL 12 2017

PRODUCT APPROVED
as complying with the Florida Building Code
NOA-No. 16-0617.02
Approval Date 07/20/2017
By
Miami-Dade Product Control

JAVAD AHMAD
LICENSE
No. 70592
STATE OF FLORIDA
PROFESSIONAL ENGINEER

3 TRACK FRAMES
ANCHOR LOCATIONS

AL-FAROOQ CORPORATION
ENGINEERS & PRODUCT DEVELOPMENT
9360 SUNSET DRIVE, SUITE 220
MIAMI, FLORIDA 33173 (C.A.N. 3538)
TEL. (305) 264-8100 FAX. (305) 262-6978
COMP-ANL\W16-73ES

ES-EL400 ALUM SLIDING GLASS DOOR (L.M.I.)

E.S. WINDOWS, LLC
3550 N.W. 49 STREET
MIAMI, FL. 33142
TEL. (305) 638-5151 FAX. (305) 638-5158

revisions:

no	date	by	description
A	07.12.17		REV. PER RER COMMENTS

date: 11-28-16
scale: 3/8" = 1"
dr. by: TARIQ
chk. by:

drawing no.
W16-73

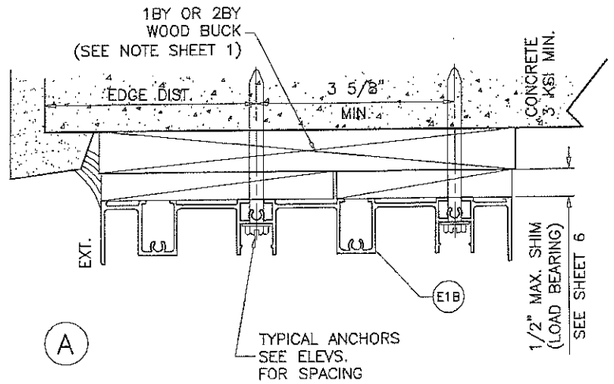

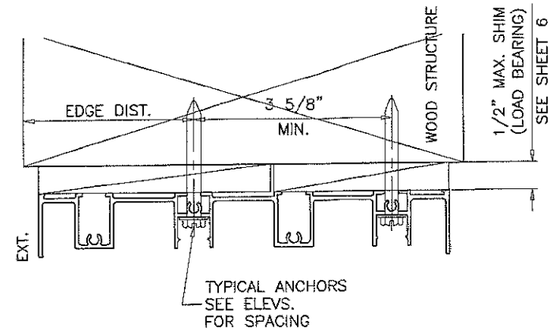

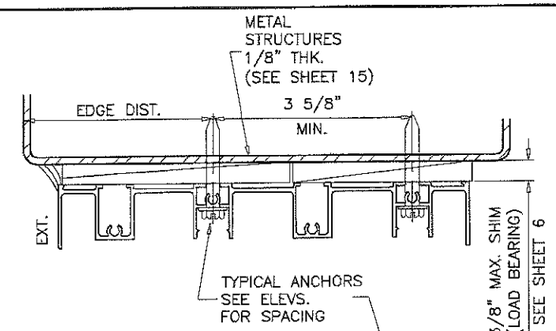

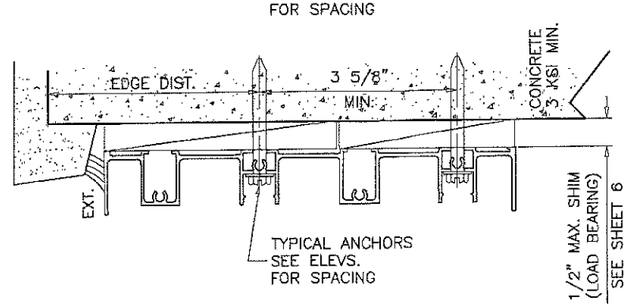

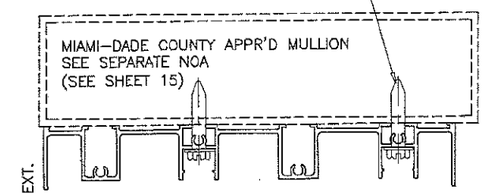

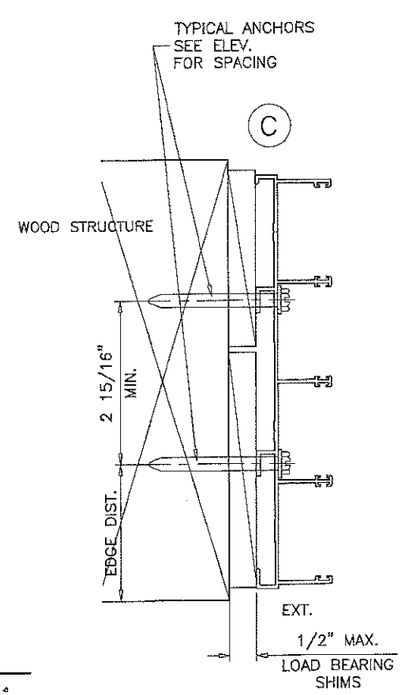

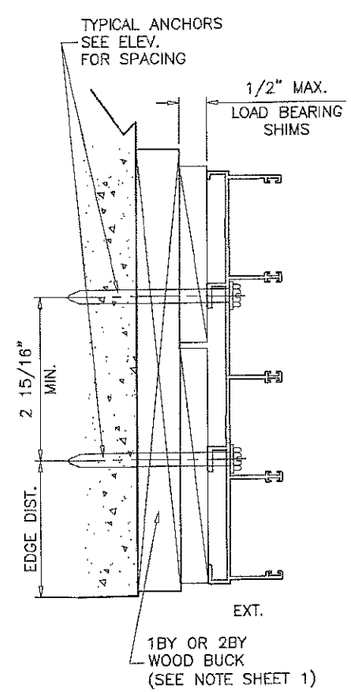

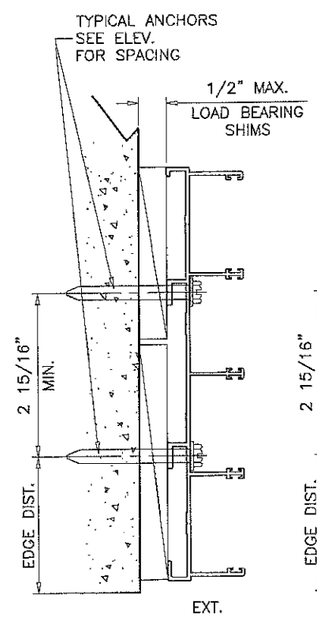

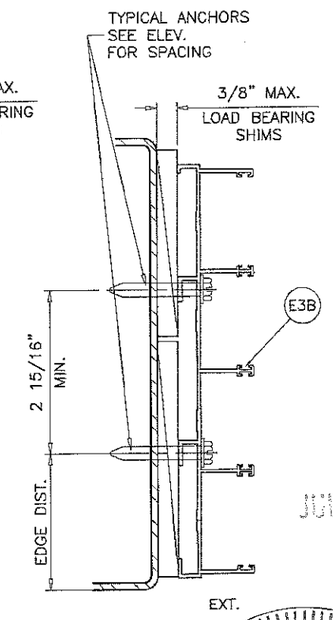

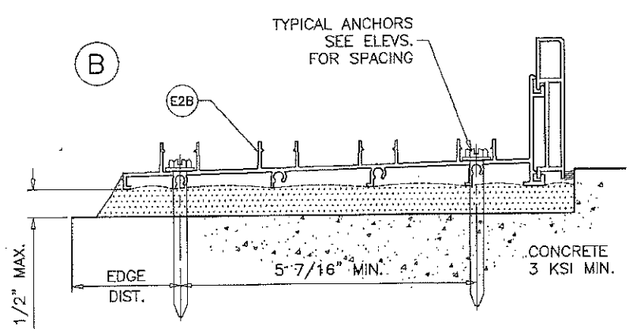

JUL 12 201

PRODUCT APPROVED
as complying with the Florida Building Code
NOA-No. 16-0617.02
Approval Date 07/20/2017
By
Miami-Dade Product Control

JAVAD AHMAD
LICENSE
No. 70592
STATE OF FLORIDA
PROFESSIONAL ENGINEER

4 TRACK FRAMES
ANCHOR LOCATIONS

AL-FAROOQ CORPORATION
ENGINEERS & PRODUCT DEVELOPMENT
9360 SUNSET DRIVE, SUITE 220
MIAMI, FLORIDA 33173 (C.A.N. 3538)
TEL. (305) 264-8100 FAX. (305) 262-6978
COMP-ANL\W16-73ES

ES-EL400 ALUM SLIDING GLASS DOOR (L.M.I.)

E.S. WINDOWS, LLC
3550 N.W. 49 STREET
MIAMI, FL. 33142
TEL. (305) 638-5151 FAX. (305) 638-5158

revisions:

no	date	by	description
A	07.12.17		REV. PER RER COMMENTS

date: 11-28-16
scale: 3/8" = 1"
dr. by: TARIQ
chk. by:

drawing no.
W16-73

ITEM #	PART #	REQD.	DESCRIPTION	MATERIAL	MANF./SUPPLIER/REMARKS
E1	ES-EL400-001	1	FRAME HEAD (2 TRACK)	6063-T6	-
E1A	ES-EL400-201	AS REQD.	FRAME HEAD (3 TRACK)	6063-T6	-
E1B	ES-EL400-205	AS REQD.	FRAME HEAD (4 TRACK)	6063-T6	-
E2	ES-EL400-002	1	FRAME SILL (2 TRACK)	6063-T6	-
E2A	ES-EL400-202	AS REQD.	FRAME SILL (3 TRACK)	6063-T6	-
E2B	ES-EL400-206	AS REQD.	FRAME SILL (4 TRACK)	6063-T6	-
E3	ES-EL400-003	2	FRAME JAMB (2 TRACK)	6063-T6	-
E3A	ES-EL400-203	AS REQD.	FRAME JAMB (3 TRACK)	6063-T6	-
E3B	ES-EL400-207	AS REQD.	FRAME JAMB (4 TRACK)	6063-T6	-
E4	ES-EL400-004	1/ PANEL	TOP RAIL (INSUL. LAM. GLASS)	6063-T6	-
E5	ES-EL400-005	1/ PANEL	BOTTOM RAIL (INSUL. LAM. GLASS)	6063-T6	-
E6	ES-EL400-006	AS REQD.	JAMB STILE (INSUL. LAM. GLASS)	6063-T6	-
E7	ES-EL400-007	AS REQD.	INTERLOCK STILE (INSUL. LAM. GLASS)	6063-T6	-
E8	ES-EL400-009	1/ PANEL	TOP RAIL (LAM. GLASS)	6063-T6	-
E9	ES-EL400-010	1/ PANEL	BOTTOM RAIL (LAM. GLASS)	6063-T6	-
E10	ES-EL400-011	AS REQD.	JAMB STILE (LAM. GLASS)	6063-T6	-
E11	ES-EL400-012	AS REQD.	INTERLOCK STILE (LAM. GLASS)	6063-T6	-
E12	ES-EL400-013	AS REQD.	ASTRAGAL STILE (LAM. GLASS)	6063-T6	-
E12A	ES-EL400-008	AS REQD.	ASTRAGAL STILE (INSUL. LAM. GLASS)	6063-T6	-
E13	ES-EL400-014	AS REQD.	JAMB COVER	6063-T5	-
E14	ES-EL400-015	AS REQD.	POCKET JAMB	6063-T6	-
E15	ES-EL400-016	AS REQD.	SILL TRACK	6063-T6	-
E16	ES-EL400-017	AS REQD.	HEAD COVER	6063-T5	-
E17	ES-EL400-018	AS REQD.	SILL RISER	6063-T6	-
E18	ES-EL400-020	AS REQD.	FIXED PANEL BOTTOM GUIDE	6063-T6	-
E19	ES-EL400-021	AS REQD.	INTERLOCK REINFORCEMENT	6005-T5	-
E26	ES-6011	AS REQD.	SCREW COVER	6063-T6	-
M1	ES-EL400-G01	4/ PANEL	GLAZING GASKET (LAM. GLASS)	SILICONE	DUROMETER 70±3 SHORE A
M2	ES-EL400-G02	4/ PANEL	GLAZING GASKET (INSUL. LAM. GLASS)	SILICONE	DUROMETER 70±3 SHORE A
M3	ES2020-G04	AS REQD.	INTERLOCK BUMPER	PVC	DUROMETER 60±5 SHORE D
M4	W33271NK	AS REQD.	PILE W'STRIPPING (INTERLOCK)	WOOL	-
M5	W33181NK	AS REQD.	PILE W'STRIPPING	WOOL	-
M6	PS01-0014	AS REQD.	DOOR HANDLE	DIE CAST ALUM	TWO POINT HANDLE
M7	PS01-1015	AS REQD.	STRIKE FOR MORTISE LOCK	ST. STEEL	-
M8	PS01-1036	AS REQD.	MORTISE 2 POINT LOCK	ST. STEEL	-
M9	GT-R34/3-01-A	2/ PANEL	ROLLER ASSEMBLY	ZAMAK	-
M10	6844.1	AS REQD.	BUMPER	ALUM/NYLON	-
M11	ES-EL400-FPI SL	AS REQD.	FIX. PANEL CLIP	ST. STEEL	-
M12	#8 X 3/4"	AS REQD.	KEEPER FASTENERS	ST. STEEL	P.H. SMS
M13	#10 X 1-1/4"	AS REQD.	PANEL ASSEMBLY FASTENERS	ST. STEEL	P.H. SMS
M14	#12 X 1-1/2"	AS REQD.	FRAME ASSEMBLY FASTENERS	ST. STEEL	P.H. SMS
M15	#6 X 3/8"	AS REQD.	FIX. PANEL CLIP FASTENERS	ST. STEEL	P.H. SMS
M16	#8 X 1/2"	AS REQD.	FIX. PANEL CLIP FASTENERS	ST. STEEL	F.H. SMS
M18	#10 X 1/2"	AS REQD.	ROLLER FASTENERS	ST. STEEL	P.H. SMS
M19	#10 X 1"	AS REQD.	LOCK INSTALLATION FASTENERS	ST. STEEL	F.H. SMS
M20	#8 X 1/2"	AS REQD.	HANDLE INSTALLATION FASTENERS	ST. STEEL	F.H. SMS

LOCK:

SURFACE MOUNT METALLIC HANDLE AT 44" FROM BOTTOM
FASTENED TO LOCK STILE WITH
(2) #8 X 1/2" FH SMS (M20)

SURFACE MOUNT METALLIC 3 PLY DUAL HOOK LOCK
44" FROM BOTTOM
FASTENED TO LOCK STILE WITH
(2) #10 X 1" FH SMS

SURFACE MOUNT METALLIC KEEPER AT 44" FROM BOTTOM
FASTENED TO FRAME JAMB AND ASTRAGAL STILE WITH
(3) #8 X 3/4" PH SMS (M12)

SEALANT:

ALL JOINTS AND FRAME CONNECTIONS SEALED WITH
WHITE/ALUMINUM COLORED SILICONE.

PRODUCT APPROVED
as complying with the Florida Building Code
NOA-No. 16-0617.02
Approval Date 07/20/2017
By
Miami-Dade Product Control

JUL 1 1 2017

JAVAD AHMAD
LICENSE
No. 70592
STATE OF FLORIDA
PROFESSIONAL ENGINEER

AL-FAROOQ CORPORATION
ENGINEERS & PRODUCT DEVELOPMENT
9360 SUNSET DRIVE, SUITE 220
MIAMI, FLORIDA 33173 (C.A.N. 3538)
TEL. (305) 264-8100 FAX. (305) 262-6978

COMP-ANL\W16-73ES

ES-EL400 ALUM SLIDING GLASS DOOR (L.M.I.)

E.S. WINDOWS, LLC
3550 N.W. 49 STREET
MIAMI, FL. 33142
TEL. (305) 638-5151 FAX. (305) 638-5158

revisions:

no	date	by	description
A	07.12.17		REV. PER RER COMMENTS

date: 11-28-16
scale: 3/8" = 1"
dr. by: TARIQ
chk. by:

drawing no. W16-73

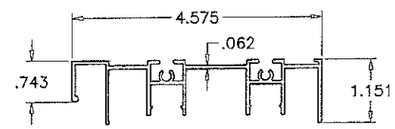

E1 FRAME HEAD (2 TRACK)

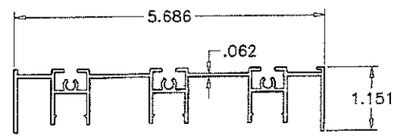

E1A FRAME HEAD (3 TRACK)

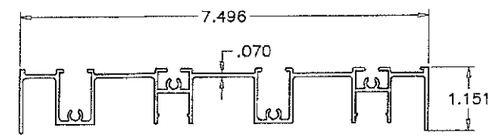

E1B FRAME HEAD (4 TRACK)

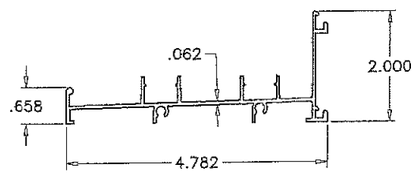

E2 FRAME SILL (2 TRACK)

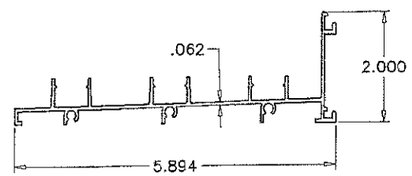

E2A FRAME SILL (3 TRACK)

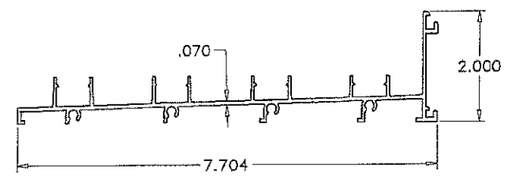

E2B FRAME SILL (4 TRACK)

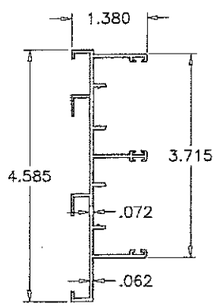

E3 FRAME JAMB (2 TRACK)

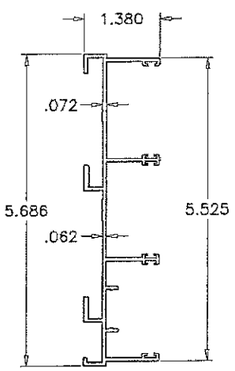

E3A FRAME JAMB (3 TRACK)

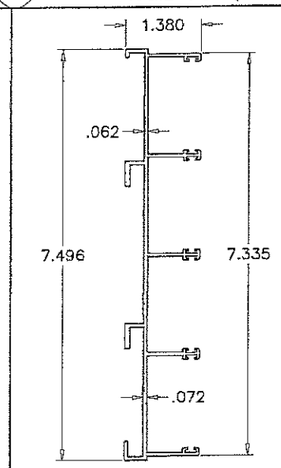

E3B FRAME JAMB (4 TRACK)

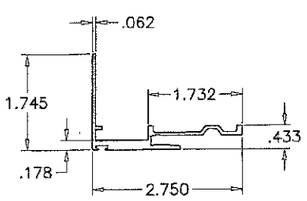

E14 POCKET JAMB

PRODUCT APPROVED
as complying with the Florida Building Code
NOA-No. 16-0617.02
Approval Date 07/20/2017
By
Miami-Dade Product Control

JUL 12 2017

JAVAD AHMAD
LICENSE
No. 70592
STATE OF FLORIDA
PROFESSIONAL ENGINEER

AL-FAROOQ CORPORATION
ENGINEERS & PRODUCT DEVELOPMENT
9360 SUNSET DRIVE, SUITE 220
MIAMI, FLORIDA 33173 (C.A.N. 3538)
TEL. (305) 264-8100 FAX. (305) 262-6978

COMP-ANL\W16-73ES

ES-EL400 ALUM SLIDING GLASS DOOR (L.M.I.)

E.S. WINDOWS, LLC
3550 N.W. 49 STREET
MIAMI, FL. 33142
TEL. (305) 638-5151 FAX. (305) 638-5158

revisions:

no	date	by	description
A	07.12.17		NO CHANGE THIS SHEET

date: 11-28-16
scale: 3/8" = 1"
dr. by: TARIQ
chk. by:

drawing no.
W16-73

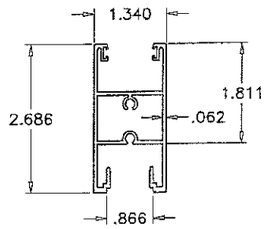

E8 PANEL TOP RAIL (LAM. GLASS)

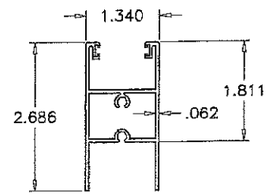

E4 PANEL TOP RAIL (INSUL. LAM. GLASS)

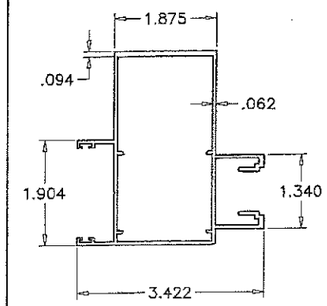

E12 ASTRAGAL STILE (LAM. GLASS)

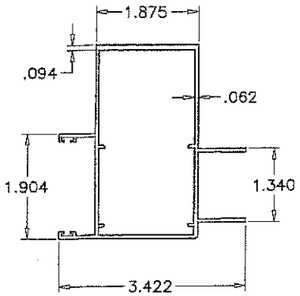

E12A ASTRAGAL STILE (INSUL. LAM. GLASS)

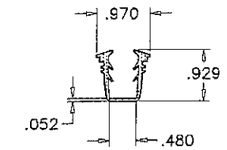

M1 GLAZING GAKET LAM. GLASS

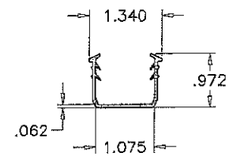

M2 GLAZING GASKET INSUL. LAM. GLASS

MATERIAL = SILICONE
HARDNESS = 70±3
TENSILE STRENGTH = 1139 PSI
ELONGATION AT BREAK = 235%
TEAR STRENGTH = 107 Lb/IN
BRITTLENESS TEMPERATURE = −40° F
COMPRESSION SET = 12.5% (22h@212°F)

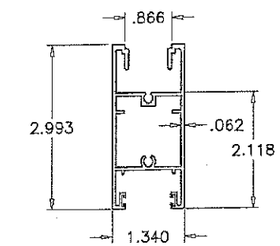

E9 PANEL BOTTM RAIL (LAM. GLASS)

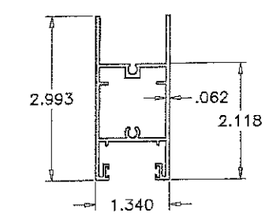

E5 PANEL BOTTM RAIL (INSUL. LAM. GLASS)

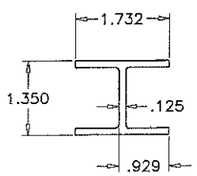

E19 INTERLOCK STIFFENER

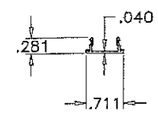

E16 HEAD COVER

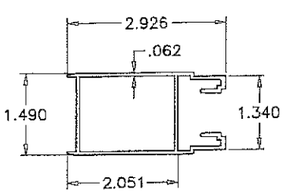

E10 PANEL JAMB STILE (LAM. GLASS)

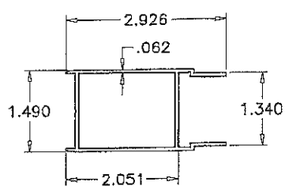

E6 PANEL JAMB STILE (INSUL. LAM. GLASS)

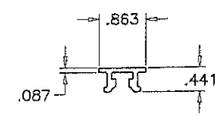

E18 FIX. PANEL BOTTOM GUIDE

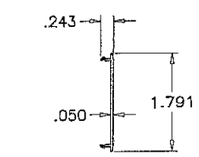

E13 JAMB COVER

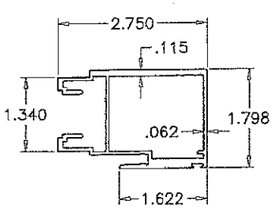

E11 INTERLOCK STILE (LAM. GLASS)

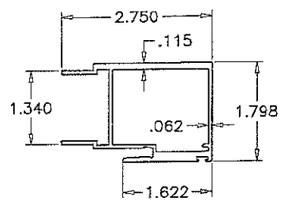

E7 INTERLOCK STILE (INSUL. LAM. GLASS)

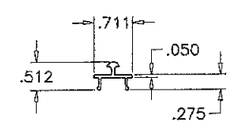

E15 TRACK INSERT

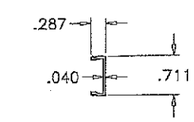

E26 SCREW COVER

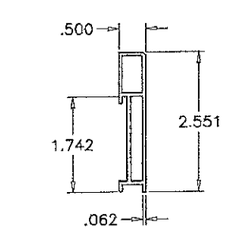

E17 SILL RISER

JUL 12 2017

PRODUCT APPROVED
as complying with the Florida Building Code
NOA-No. 16-0617.02
Approval Date 07/20/2017
By
Miami-Dade Product Control

JAVAD AHMAD
LICENSE
No. 70592
STATE OF FLORIDA
PROFESSIONAL ENGINEER

AL-FAROOQ CORPORATION
ENGINEERS & PRODUCT DEVELOPMENT
9360 SUNSET DRIVE, SUITE 220
MIAMI, FLORIDA 33173 (C.A.N. 3538)
TEL. (305) 264-8100 FAX. (305) 262-6978
COMP-ANL\W16-73ES

ES-EL400 ALUM SLIDING GLASS DOOR (L.M.I.)

E.S. WINDOWS, LLC
3550 N.W. 49 STREET
MIAMI, FL. 33142
TEL. (305) 638-5151 FAX. (305) 638-5158

revisions:

no	date	by	description
A	07.12.17		REV. PER RER COMMENTS

date: 11-28-16
scale: 3/8" = 1"
dr. by: TARIQ
chk. by:

drawing no. W16-73

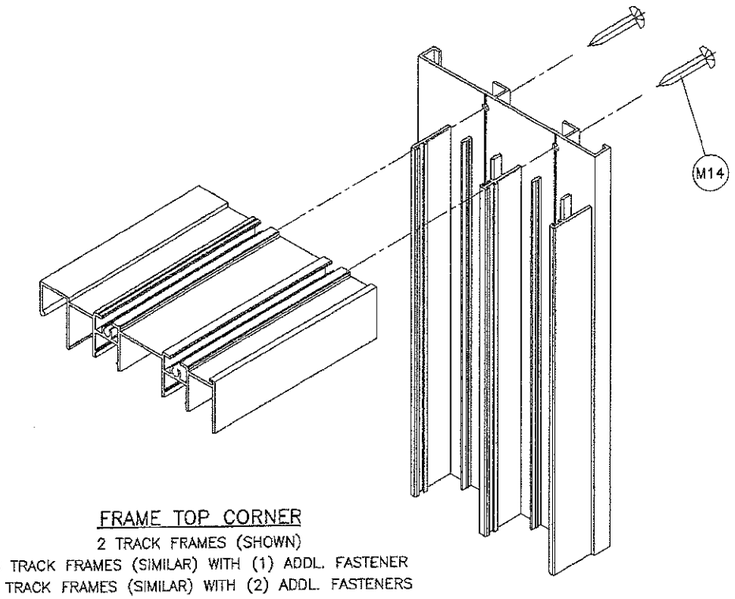

FRAME TOP CORNER

2 TRACK FRAMES (SHOWN)

3 TRACK FRAMES (SIMILAR) WITH (1) ADDL. FASTENER

4 TRACK FRAMES (SIMILAR) WITH (2) ADDL. FASTENERS

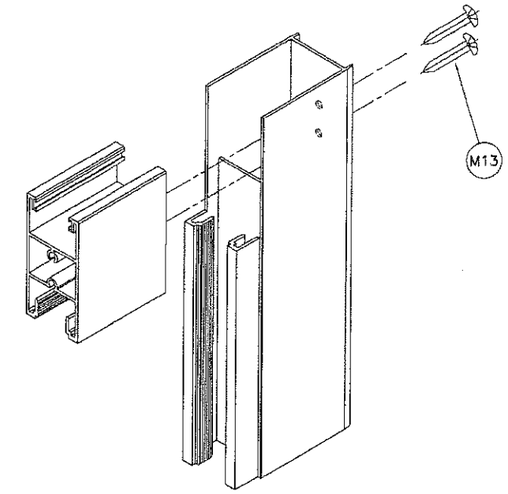

PANEL TOP/BOTTOM CORNER

LAM. GLASS RAIL & STILE (SHOWN)

INSUL. LAM. GLASS RAIL & STILE (SIMILAR)

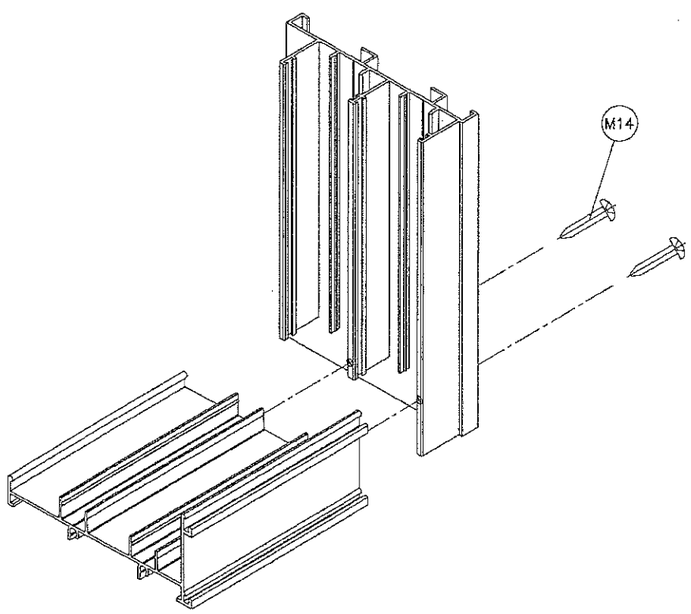

FRAME BOTTOM CORNER

2 TRACK FRAMES (SHOWN)

3 TRACK FRAMES (SIMILAR) WITH (1) ADDL. FASTENER

4 TRACK FRAMES (SIMILAR) WITH (2) ADDL. FASTENERS

JUL 13 2017

PRODUCT APPROVED
as complying with the Florida Building Code
NOA-No. 16-0617.02
Approval Date 07/20/2017
By
Miami-Dade Product Control

JAVAD AHMAD
LICENSE
No. 70592
STATE OF FLORIDA
PROFESSIONAL ENGINEER

AL-FAROOQ CORPORATION
ENGINEERS & PRODUCT DEVELOPMENT
9360 SUNSET DRIVE, SUITE 220
MIAMI, FLORIDA 33173
(C.A.N. 3638)
TEL. (305) 264-8100 FAX. (305) 262-6978

COMP-ANL\W16-73ES

ES-EL400 ALUM SLIDING GLASS DOOR (L.M.I.)

E.S. WINDOWS, LLC
3550 N.W. 49 STREET
MIAMI, FL. 33142
TEL. (305) 638-5151 FAX. (305) 638-5158

revisions:

no	date	by	description
A	07.12.17		NO CHANGE THIS SHEET

date: 11-28-16
scale: 3/8" = 1"
dr. by: TARIQ
chk. by:

drawing no.
W16-73