MIAMI-DADE COUNTY
DEPARTMENT OF REGULATORY AND ECONOMIC RESOURCES (RER)
BOARD AND CODE ADMINISTRATION DIVISION

MIAMI-DADE COUNTY
PRODUCT CONTROL SECTION
11805 SW 26 Street, Room 208
T (786) 315-2590 F (786) 315-2599
www.miamidade.gov/economy

NOTICE OF ACCEPTANCE (NOA)

PGT Industries, Inc.
1070 Technology Drive
North Venice, FL 34275

SCOPE:

This NOA is being issued under the applicable rules and regulations governing the use of construction materials. The documentation submitted has been reviewed and accepted by Miami-Dade County RER - Product Control Section to be used in Miami Dade County and other areas where allowed by the Authority Having Jurisdiction (AHJ).

This NOA shall not be valid after the expiration date stated below. The Miami-Dade County Product Control Section (In Miami-Dade County) and/or the AHJ (in areas other than Miami-Dade County) reserve the right to have this product or material tested for quality assurance purposes. If this product or material fails to perform in the accepted manner, the manufacturer will incur the expense of such testing and the AHJ may immediately revoke, modify, or suspend the use of such product or material within their jurisdiction. RER reserves the right to revoke this acceptance, if it is determined by Miami–Dade County Product Control Section that this product or material fails to meet the requirements of the applicable building code.

This product is approved as described herein, and has been designed to comply with the Florida Building Code, including the High Velocity Hurricane Zone.-

DESCRIPTION: Series "CA-640" Outswing Aluminum Casement Window – N.I.

APPROVAL DOCUMENT: Drawing No. **MD-CA640-NI**, titled "Casement Window Details – Non Impact", sheets 1 through 12 of 12, dated 08/08/12, with revision B dated 05/05/16, prepared by manufacturer, signed and sealed by Anthony Lynn Miller, P.E., bearing the Miami–Dade County Product Control Revision stamp with the Notice of Acceptance number and expiration date by the Miami-Dade County Product Control Section.

MISSILE IMPACT RATING: None.

LABELING: Each unit shall bear a permanent label with the manufacturer's name or logo, city, state, model/series, and following statement: "Miami-Dade County Product Control Approved", unless otherwise noted herein.

RENEWAL of this NOA shall be considered after a renewal application has been filed and there has been no change in the applicable building code negatively affecting the performance of this product.

TERMINATION of this NOA will occur after the expiration date or if there has been a revision or change in the materials, use, and/or manufacture of the product or process. Misuse of this NOA as an endorsement of any product, for sales, advertising or any other purposes shall automatically terminate this NOA. Failure to comply with any section of this NOA shall be cause for termination and removal of NOA.

ADVERTISEMENT: The NOA number preceded by the words Miami-Dade County, Florida, and followed by the expiration date may be displayed in advertising literature. If any portion of the NOA is displayed, then it shall be done in its entirety.

INSPECTION: A copy of this entire NOA shall be provided to the user by the manufacturer or its distributors and shall be available for inspection at the job site at the request of the Building Official.

This NOA **revises NOA# 15-0519.14** and consists of this page 1 and evidence pages E-1, E-2 and E-3, as well as approval document mentioned above.

The submitted documentation was reviewed by **Manuel Perez, P.E.**

MIAMI-DADE COUNTY APPROVED

8/3/16

NOTICE OF ACCEPTANCE: EVIDENCE SUBMITTED

A. DRAWINGS

1. Manufacturer's die drawings and sections.
   (Submitted under NOA No. 12-1218.10)
2. Drawing No. **MD-CA640-NI**, titled "Casement Window Details – Non Impact", sheets 1 through 12 of 12, dated 08/08/12, with revision B dated 05/05/16, prepared by manufacturer, signed and sealed by Anthony Lynn Miller, P.E.

B. TESTS

1. Test reports on: 1) Uniform Static Air Pressure Test, Loading per FBC, TAS 202-94
   2) Large Missile Impact Test per FBC, TAS 201-94
   3) Cyclic Wind Pressure Loading per FBC, TAS 203-94

   along with marked-up drawings and installation diagram of a PVC sliding glass door, a PVC fixed window and an aluminum sliding glass door, using: Kodispace 4SG TPS spacer system, Duraseal® spacer system, Super Spacer® NXT™ spacer system and XL Edge™ spacer system at insulated glass, prepared by Fenestration Testing Laboratory, Inc., Test Reports No. **FTL-8717, FTL-8968** and **FTL-8970**, dated 11/16/15, 06/07/16 and 06/02/16 respectively, all signed and sealed by Idalmis Ortega, P.E.
2. Test reports on: 1) Air Infiltration Test, per FBC, TAS 202-94
   2) Uniform Static Air Pressure Test, Loading per FBC, TAS 202-94
   3) Water Resistance Test, per FBC, TAS 202-94
   4) Forced Entry Test, per FBC 2411.3.2.1, and TAS 202-94

   along with marked-up drawings and installation diagram of a series CA-640 alum. casement window, prepared by Fenestration Testing Laboratory, Inc., Test Report No. **FTL-7064**, dated 10/02/12, signed and sealed by Marlin D. Brinson, P.E.
   (Submitted under NOA No. 12-1218.10)
3. Test reports on: 1) Air Infiltration Test, per FBC, TAS 202-94
   2) Uniform Static Air Pressure Test, Loading per FBC, TAS 202-94
   3) Water Resistance Test, per FBC, TAS 202-94
   4) Forced Entry Test, per FBC 2411.3.2.1, and TAS 202-94

   along with marked-up drawings and installation diagram of a series CA-740 outswing aluminum casement window mulled to a fixed window, prepared by Fenestration Testing Laboratory, Inc., Test Report No. **FTL-3579**, dated 10/03/02, signed and sealed by Joseph Chan, P.E.
   (Submitted under NOA No. 12-1218.10)

Manuel Perez, P.E.
Product Control Examiner
NOA No. 16-0629.19
Expiration Date: April 11, 2018
Approval Date: August 11, 2016

NOTICE OF ACCEPTANCE: EVIDENCE SUBMITTED

B. TESTS (CONTINUED)

4. Test reports on: 1) Air Infiltration Test, per FBC, TAS 202-94
2) Uniform Static Air Pressure Test, Loading per FBC, TAS 202-94
3) Water Resistance Test, per FBC, TAS 202-94
4) Large Missile Impact Test per FBC, TAS 201-94
5) Cyclic Wind Pressure Loading per FBC, TAS 203-94
6) Forced Entry Test, per FBC 2411.3.2.1, and TAS 202-94

along with marked-up drawings and installation diagram of a series CA-740 outswing aluminum casement window mulled to a fixed window, prepared by Fenestration Testing Laboratory, Inc., Test Report No. **FTL-3580**, dated 10/03/02, signed and sealed by Joseph Chan, P.E.
(Submitted under NOA No. 12-1218.10)

5. Test reports on: 1) Air Infiltration Test, per FBC, TAS 202-94
2) Uniform Static Air Pressure Test, Loading per FBC, TAS 202-94
3) Water Resistance Test, per FBC, TAS 202-94
4) Large Missile Impact Test per FBC, TAS 201-94
5) Cyclic Wind Pressure Loading per FBC, TAS 203-94
6) Forced Entry Test, per FBC 2411.3.2.1, and TAS 202-94

along with marked-up drawings and installation diagram of a series CA-740 aluminum fixed window mulled to a projected window, prepared by Fenestration Testing Laboratory, Inc., Test Report No. **FTL-3724**, dated 02/28/02, signed and sealed by Joseph Chan, P.E.
(Submitted under NOA No. 12-1218.10)

C. CALCULATIONS

1. Anchor verification calculations and structural analysis, complying with **FBC-5th Edition (2014)**, dated 05/16/15, prepared by manufacturer, signed and sealed by Anthony Lynn Miller, P.E.
(Submitted under previous NOA No. 15-0519.14)

2. Glazing complies with **ASTM E1300-04**

D. QUALITY ASSURANCE

1. Miami-Dade Department of Regulatory and Economic Resources (RER).

E. MATERIAL CERTIFICATIONS

1. None.

Manuel Perez, P.E.
Product Control Examiner
NOA No. 16-0629.19
Expiration Date: April 11, 2018
Approval Date: August 11, 2016

NOTICE OF ACCEPTANCE: EVIDENCE SUBMITTED

F. STATEMENTS

1. Statement letter of conformance, complying with **FBC-5th Edition (2014)**, dated May 16, 2015, issued by manufacturer, signed and sealed by Anthony Lynn Miller, P.E. ***(Submitted under previous NOA No. 15-0519.14)***
2. Statement letter of no financial interest, dated May 16, 2015, issued by manufacturer, signed and sealed by Anthony Lynn Miller, P.E. ***(Submitted under previous NOA No. 15-0519.14)***
3. Proposal No. **16-0125** issued by the Product Control Section, dated March 09, 2016, signed by Ishaq Chanda, P.E.

G. OTHERS

1. Notice of Acceptance No. **15-0519.14**, issued to PGT Industries, Inc. for their Series "CA-640" Outswing Aluminum Casement Window - N.I." approved on 08/20/15 and expiring on 04/11/18.

Manuel Perez, P.E.
Product Control Examiner
NOA No. 16-0629.19
Expiration Date: April 11, 2018
Approval Date: August 11, 2016

GENERAL NOTES: SERIES 640 NON-IMPACT CASEMENT WINDOW

1) THIS PRODUCT HAS BEEN DESIGNED & TESTED TO COMPLY WITH THE REQUIREMENTS OF THE FLORIDA BUILDING CODE, INCLUDING THE HIGH VELOCITY HURRICANE ZONE (HVHZ).

2) SHUTTERS ARE REQUIRED WHEN USED IN WIND-BORNE DEBRIS REGIONS.

3) FOR MASONRY APPLICATIONS IN MIAMI-DADE COUNTY, USE ONLY MIAMI-DADE COUNTY APPROVED MASONRY ANCHORS. MATERIALS USED FOR ANCHOR EVALUATIONS WERE SOUTHERN PINE, ASTM C90 CONCRETE MASONRY UNITS AND CONCRETE WITH MIN. KSI PER ANCHOR TYPE, SEE TABLE 3, SHEET 4.

4) ALL WOOD BUCKS LESS THAN 1-1/2" THICK ARE TO BE CONSIDERED 1X INSTALLATIONS. 1X WOOD BUCKS ARE OPTIONAL IF UNIT IS INSTALLED DIRECTLY TO SUBSTRATE. WOOD BUCKS DEPICTED AS 2X ARE 1-1/2" THICK OR GREATER. 1X AND 2X BUCKS (WHEN USED) SHALL BE DESIGNED TO PROPERLY TRANSFER LOADS TO THE STRUCTURE. WOOD BUCK DESIGN AND INSTALLATION IS THE RESPONSIBILITY OF THE ENGINEER OR ARCHITECT OF RECORD.

5) ANCHOR EMBEDMENT TO BASE MATERIAL SHALL BE BEYOND WALL DRESSING OR STUCCO. USE ANCHORS OF SUFFICIENT EMBEDMENT AS SPECIFIED ON TABLE 3, SHEET 4. NARROW JOINT SEALANT IS USED ON ALL FOUR CORNERS OF THE FRAME. INSTALLATION ANCHORS SHOULD BE SEALED. OVERALL SEALING/FLASHING STRATEGY FOR WATER RESISTANCE OF INSTALLATION SHALL BE DONE BY OTHERS AND IS BEYOND THE SCOPE OF THESE INSTRUCTIONS.

6) SHIMS ARE REQUIRED AT EACH ANCHOR LOCATION WHERE THE PRODUCT IS NOT FLUSH TO THE SUBSTRATE. USE SHIMS CAPABLE OF TRANSFERRING APPLIED LOADS. WOOD BUCKS, BY OTHERS, MUST BE SUFFICIENTLY ANCHORED TO RESIST LOADS IMPOSED ON THEM BY THE WINDOW.

7) DESIGN PRESSURES:
A. NEGATIVE DESIGN LOADS BASED ON STRUCTURAL TEST PRESSURE, FRAME ANALYSIS AND GLASS PER ASTM E1300.
B. POSITIVE DESIGN LOADS BASED ON WATER TEST PRESSURE, STRUCTURAL TEST PRESSURE, FRAME ANALYSIS AND GLASS PER ASTM E1300.

8) THE ANCHORAGE METHODS SHOWN HAVE BEEN DESIGNED TO RESIST THE WINDLOADS CORRESPONDING TO THE REQUIRED DESIGN PRESSURE. THE 33-1/3% STRESS INCREASE HAS NOT BEEN USED IN THE DESIGN OF THIS PRODUCT. THE 1.6 LOAD DURATION FACTOR WAS USED FOR THE EVALUATION OF ANCHORS INTO WOOD. ANCHORS THAT COME INTO CONTACT WITH OTHER DISSIMILAR MATERIALS SHALL MEET THE REQUIREMENTS OF THE FLORIDA BUILDING CODE FOR CORROSION RESISTANCE.

9) REFERENCES: TEST REPORTS FTL-7064, 3579, 3580, 3724; ELCO ULTRACON NOA; ELCO CRETEFLEX NOA; ANSI/AF&PA NDS FOR WOOD CONSTRUCTION AND ADM ALUMINUM DESIGN MANUAL.

DESIGN PRESSURE RATING	IMPACT RATING
VARIES, SEE SHEETS 5-10	NON-IMPACT RESISTANT

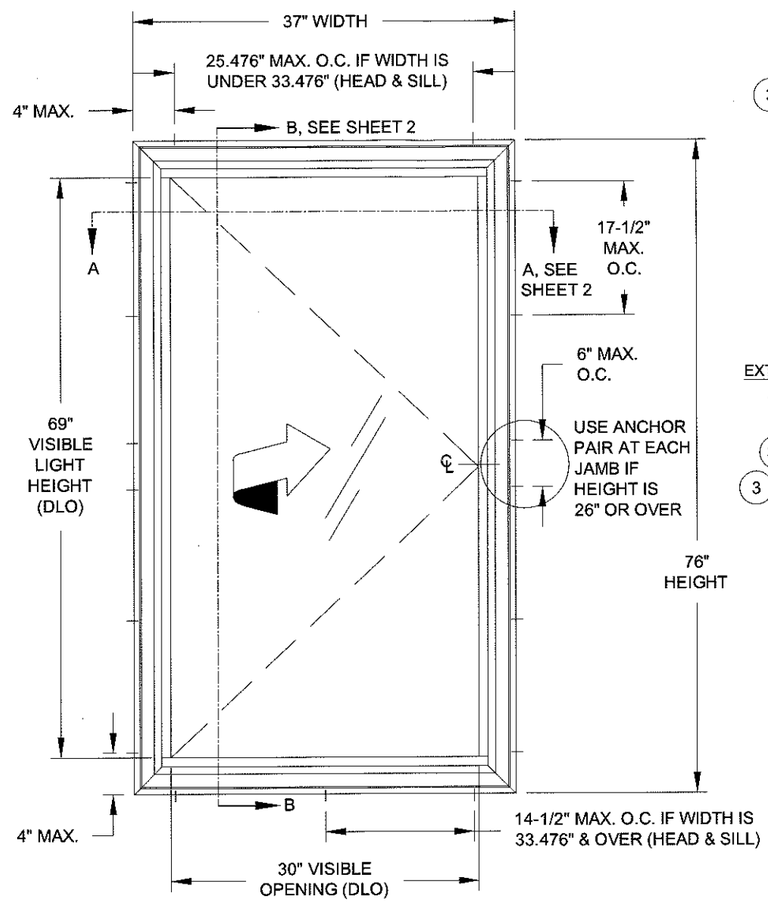

TYP. ELEVATION OF CASEMENT WINDOW

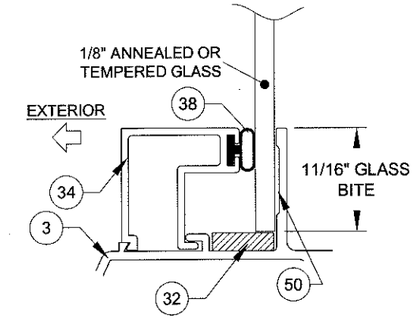

GLASS TYPES 1 & 2

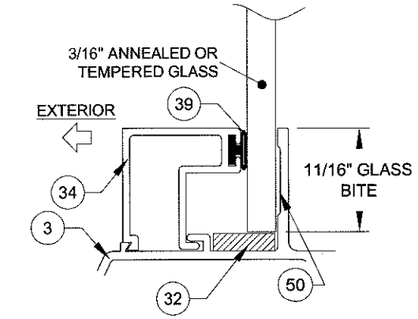

GLASS TYPES 3 & 4

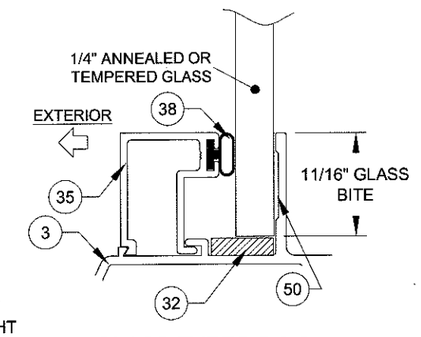

GLASS TYPES 5 & 6

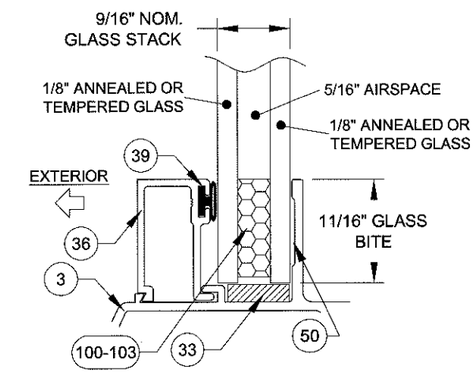

GLASS TYPES 7 & 8

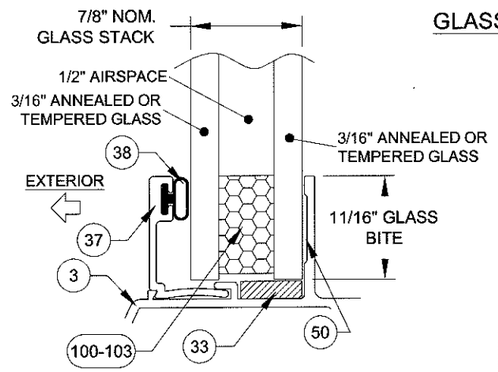

GLASS TYPES 9 & 10

TABLE 1:

	Glass Types	Sheet #
1	1/8" Annealed	5
2	1/8" Tempered	5
3	3/16" Annealed	6
4	3/16" Tempered	7
5	1/4" Annealed	6
6	1/4" Tempered	7
7	9/16" IG: (1/8" An - 5/16" Air - 1/8" An)	8
8	9/16" IG: (1/8" T - 5/16" Air - 1/8" T)	9
9	7/8" IG: (3/16" An - 1/2" Air - 3/16" An)	10
10	7/8" IG: (3/16" T - 1/2" Air - 3/16" T)	10

GENERAL NOTES..... 1
ELEVATION..... 1
GLAZING DETAILS..... 1
INSTALLATION..... 2
ASSEMBLY TUBE DETAILS..... 3
ANCHOR SPECIFICATIONS..... 4
ANCHOR QUANTITIES..... 4
DESIGN PRESSURES..... 5-10
ASSEMBLY DETAILS/BOM..... 11
EXTRUSIONS/SPACER..... 12

STANDARDS USED:

- 2014 FLORIDA BUILDING CODE (FBC), 5TH EDITION
- ASTM E1300-04
- ANSI/AF&PA NDS-2012 FOR WOOD CONSTRUCTION
- ALUMINUM DESIGN MANUAL, ADM-2010
- AISI-S100-07/S2-2010

ANTHONY LYNN MILLER LICENSE No. 58705 STATE OF FLORIDA PROFESSIONAL ENGINEER
6/8/16
A. LYNN MILLER, P.E.
P.E.# 58705

PGT®
1070 TECHNOLOGY DRIVE
N. VENICE, FL 34275
P.O. BOX 1529
NOKOMIS, FL 34274
CERT. OF AUTH. #29296

Revised By:	Date:	Revision B:
JR	05/05/16	ADDED SHEET 12 WITH SPACERS.
Revised By:	Date:	Revision A:

PRODUCT REVISED
as complying with the Florida Building Code
Acceptance No 16-0629.19
Expiration Date April 11, 2018
By Manuel Perez
Miami-Dade Product Control

Description:	Drawn By:
GEN. NOTES, GLAZING & ELEVATION	J ROSOWSKI

Title:	Date:
CASEMENT WINDOW DETAILS - NON IMPACT	08/08/12

Series/Model:	Scale:	Sheet:	Drawing No.	Rev:
CA-640	NTS	1 OF 12	MD-CA640-NI	B

INSTALLATION OPTION 1
INSTALLATION ANCHORS INTO 2X WOOD.

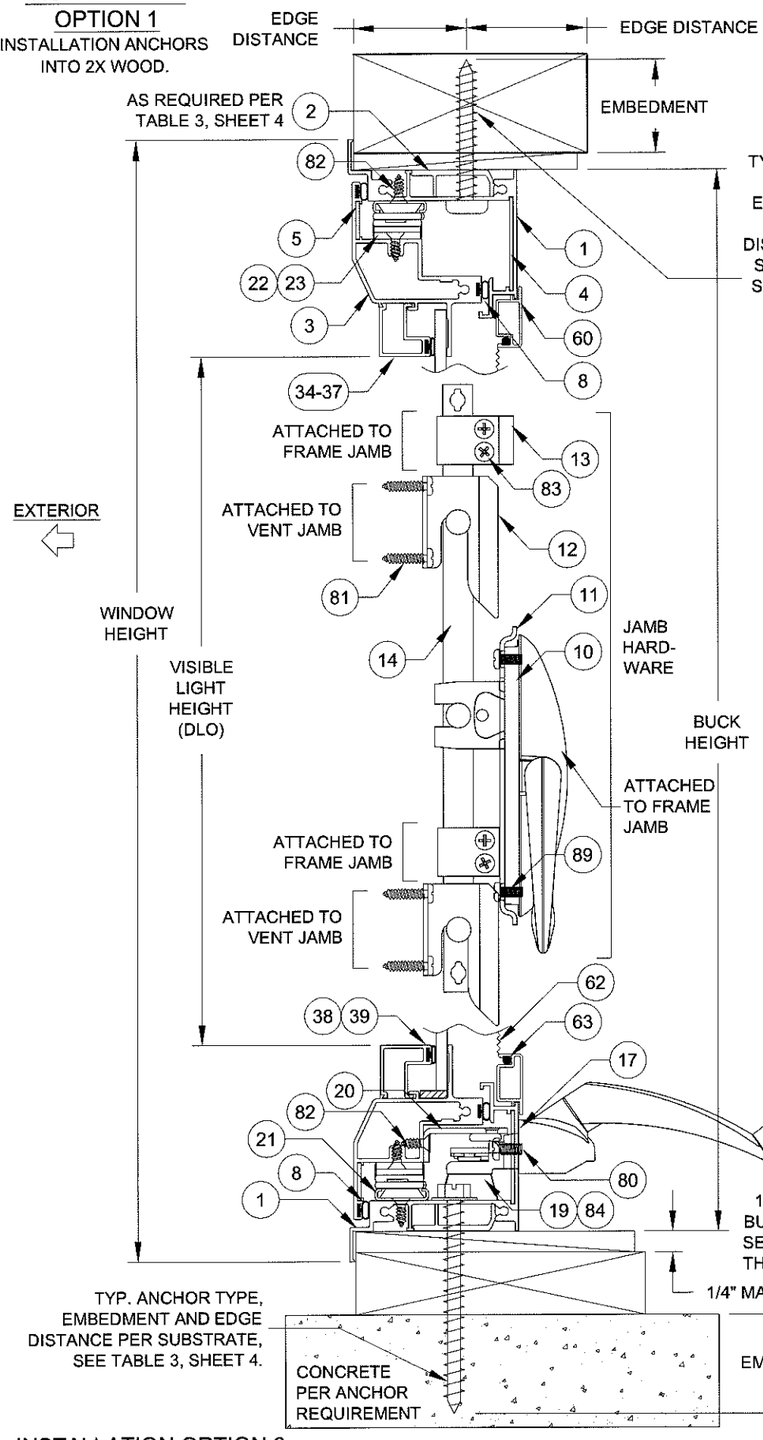

INSTALLATION OPTION 3
INSTALLATION ANCHORS THROUGH 1X BUCKSTRIP INTO MASONRY.

VERTICAL SECTION B-B

INSTALLATION OPTION 2
INSTALLATION ANCHORS DIRECTLY INTO MASONRY.

INSTALLATION OPTION 4
INSTALLATION ANCHORS DIRECTLY INTO METAL.

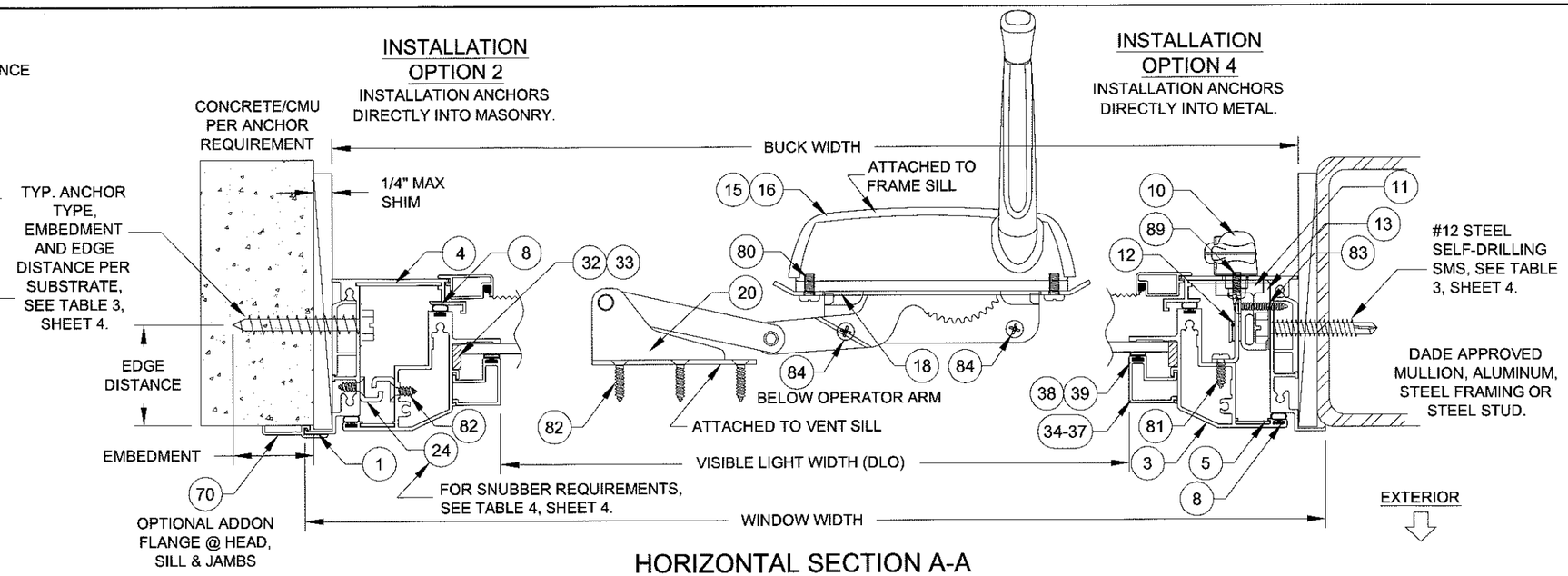

HORIZONTAL SECTION A-A

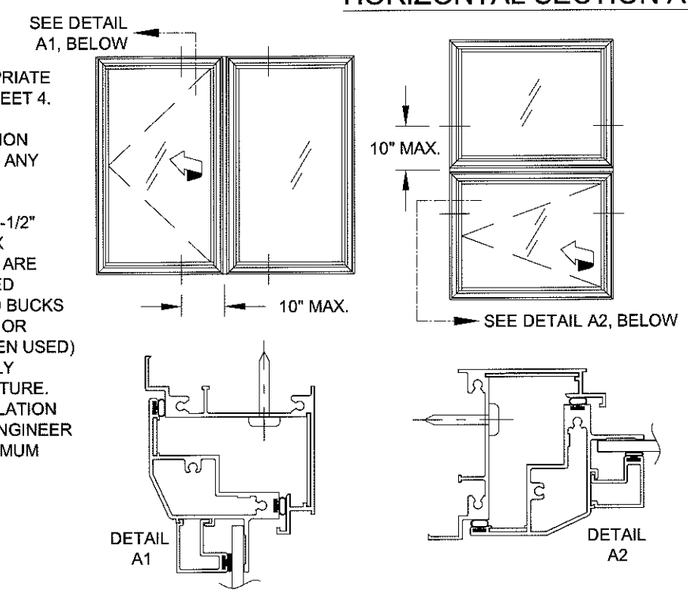

NOTES:
1) USE ONLY SUBSTRATE-APPROPRIATE ANCHORS LISTED ON TABLE 3, SHEET 4. FOLLOW EMBEDMENT AND EDGE DISTANCE LIMITS. ANY INSTALLATION OPTION SHOWN MAY BE USED ON ANY SIDE OF THE WINDOW.

2) ALL WOOD BUCKS LESS THAN 1-1/2" THICK ARE TO BE CONSIDERED 1X INSTALLATIONS. 1X WOOD BUCKS ARE OPTIONAL. UNIT MAY BE INSTALLED DIRECTLY TO SUBSTRATE. WOOD BUCKS DEPICTED AS 2X ARE 1-1/2" THICK OR GREATER. 1X AND 2X BUCKS (WHEN USED) SHALL BE DESIGNED TO PROPERLY TRANSFER LOADS TO THE STRUCTURE. WOOD BUCK DESIGN AND INSTALLATION IS THE RESPONSIBILITY OF THE ENGINEER OR ARCHITECT OF RECORD. MAXIMUM SHIM THICKNESS TO BE 1/4".

NOTES:
1) WHEN INSTALLING COMBINATION UNITS, ADDITIONAL INSTALLATION ANCHORS MAY NEED TO BE INSTALLED THROUGH THE WINDOW FRAMES AT 10" MAX. FROM EACH SIDE OF THE FRAME ASSEMBLY TUBE CENTERLINE. SEE TABLE BELOW:

Additional Anchors Required on each Side of the Frame Assembly Tube (FAT)

	Window Width	Anchor Type A	Anchor Type B, C & D
Vertical FAT	17" - 22.9"	0	0
	23" - 25.9"	0	1
	26"+	1	1
	Window Height	**Anchor Type A**	**Anchor Type B, C & D**
Horizontal FAT	17" - 22.9"	0	0
	23" - 25.9"	0	1
	26"+	1	1

EGRESS FORMULAS:
WIDTH, WASH HINGE: WINDOW WIDTH - 13-1/2
WIDTH, EGRESS HINGE: WINDOW WIDTH - 7-1/2
HEIGHT: WINDOW HEIGHT - 6

VISIBLE LIGHT FORMULAS:
WIDTH: WINDOW WIDTH - 7
HEIGHT: WINDOW HEIGHT - 7

PRODUCT REVISED
as complying with the Florida Building Code
Acceptance No 16-0629.19
Expiration Date April 11, 2018
By Manuel Perez
Miami Dade Product Control

A. Lynn Miller 8/8/16
A. LYNN MILLER, P.E.
P.E.# 58705

PGT®
1070 TECHNOLOGY DRIVE
N. VENICE, FL 34275
P.O. BOX 1529
NOKOMIS, FL 34274
CERT. OF AUTH. #29296

Revised By:	Date:	Revision B:
JR	05/05/16	CORRECTED QTY. OF ROTO SCREWS, #84.
Revised By:	Date:	Revision A:

Description: CROSS SECTIONS & INSTALLATION				Drawn By: J ROSOWSKI
Title: CASEMENT WINDOW DETAILS - NON IMPACT				Date: 08/08/12
Series/Model: CA-640	Scale: NTS	Sheet: 2 OF 12	Drawing No. MD-CA640-NI	Rev: B

CASEMENT (X)

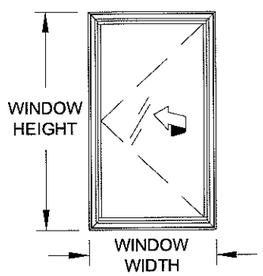

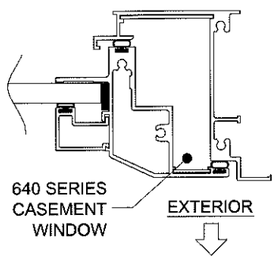

FOR SINGLE UNITS:

1) DETERMINE YOUR WINDOW SIZE AND GLASS.

2) KNOWING YOUR ANCHOR TYPE AND SUBSTRATE, DETERMINE YOUR ANCHOR GROUP FROM TABLE 3, SHEET 4.

3) FROM SHEETS 5-10, FIND THE SHEET FOR YOUR GLASS TYPE. FIND THE PRODUCT'S DESIGN PRESSURE FROM THE TABLE LABELED *"DESIGN PRESSURE (PSF) FOR SINGLE WINDOWS, ALL ANCHOR GROUPS"*.

4) DIMENSIONS SHOWN ARE TIP-TO-TIP. FOR SIZES NOT SHOWN, ROUND UP TO THE NEXT AVAILABLE WIDTH OR HEIGHT DIMENSION SHOWN ON THE TABLES.

5) USING THE TABLE LABELED *"WINDOW ANCHORS REQUIRED"* (TABLE 2, SHEET 4), DETERMINE THE NUMBER OF ANCHORS NEEDED IN THE HEAD, SILL AND JAMBS OF YOUR WINDOW.

6) INSTALL AS PER THE INSTRUCTIONS ON SHEET 2.

CASEMENT / CASEMENT (XX)

FIGURE 1:

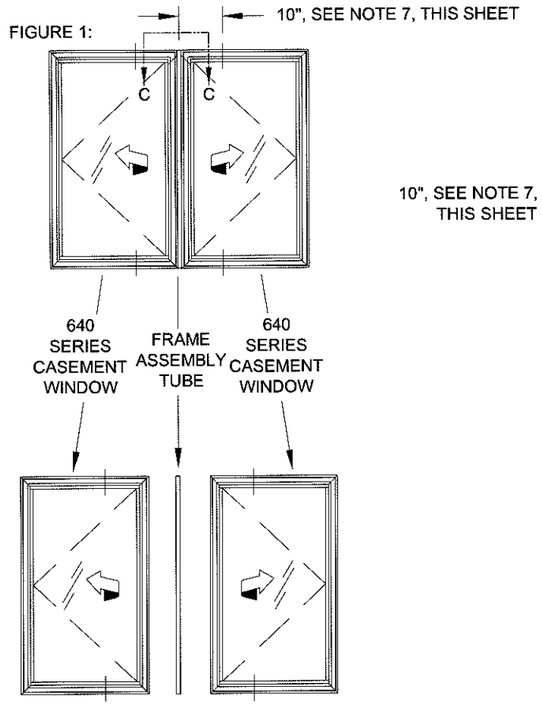

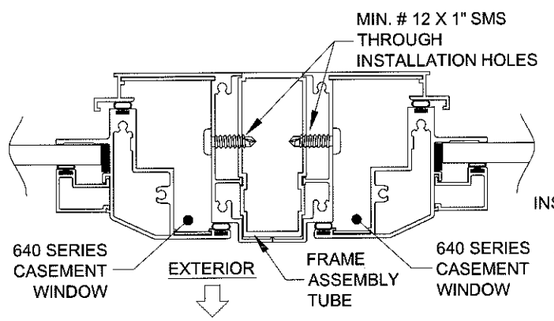

HORIZONTAL SECTION C-C

AWNING / CASEMENT / FIXED CASEMENT (XXO)

FIGURE 2:

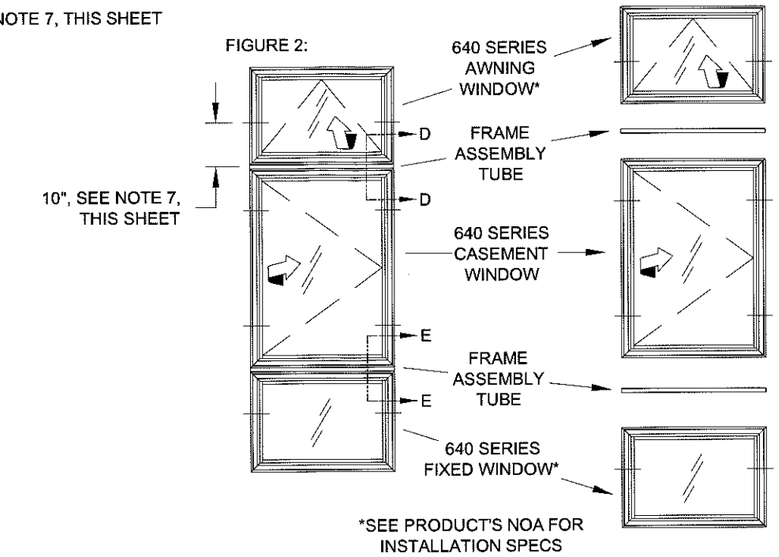

*SEE PRODUCT'S NOA FOR INSTALLATION SPECS

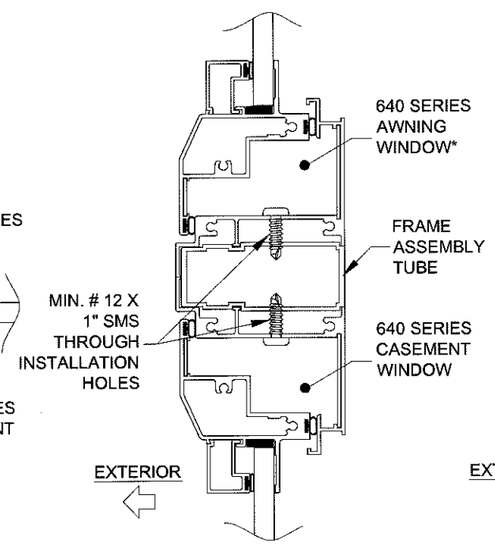

VERTICAL SECTION D-D

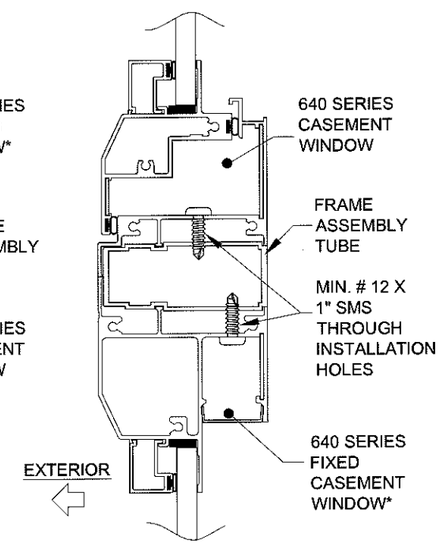

VERTICAL SECTION E-E

FOR EACH WINDOW IN A VERTICALLY OR HORIZONTALLY COMBINED ASSEMBLY:

1) DETERMINE EACH INDIVIDUAL WINDOW TYPE, SIZE AND GLASS MAKEUP, SEE FIGURES 1 & 2, THIS SHEET. DETERMINE YOUR ANCHOR GROUP FROM TABLE 3, SHEET 4.

2) FROM SHEETS 5-10, FIND THE SHEET FOR YOUR GLASS TYPE.

3) FIND THE DESIGN PRESSURE FROM THE TABLES LABELED *"DESIGN PRESSURE (PSF) FOR WINDOWS ATTACHED TO A VERTICAL FRAME ASSEMBLY TUBE"* OR *"DESIGN PRESSURE (PSF) FOR WINDOWS ATTACHED TO A HORIZONTAL FRAME ASSEMBLY TUBE"*, DEPENDING ON WHICH WAY THE FRAME ASSEMBLY TUBE IS ORIENTATED. THIS MUST BE DONE FOR EACH WINDOW IN THE ASSEMBLY, AND THE LOWEST DESIGN PRESSURE APPLIES TO THE ENTIRE ASSEMBLY. DIMENSIONS SHOWN ARE TIP-TO-TIP. FOR SIZES NOT SHOWN, ROUND UP TO THE NEXT AVAILABLE WIDTH OR HEIGHT DIMENSION SHOWN ON THE TABLES.

4) USING THE TABLE LABELED *"WINDOW ANCHORS REQUIRED"* (TABLE 2, SHEET 4), DETERMINE THE NUMBER OF ANCHORS NEEDED IN THE HEAD, SILL AND JAMBS OF YOUR WINDOW.

5) INSTALL AS PER THE INSTRUCTIONS ON SHEETS 2-3. NOTE THAT ADDITIONAL ANCHORS THROUGH THE WINDOW FRAME INTO THE SUBSTRATE MAY BE REQUIRED (SEE SHEET 2), AND THAT MIN. #12 X 1" ANCHORS ARE TO BE USED THROUGH THE FRAME INTO THE FRAME ASSEMBLY TUBE (SEE DETAILS ON THIS SHEET).

FRAME ASSEMBLY TUBE NOTES:

1) DIMENSIONS SHOWN ARE TIP-TO-TIP DIMENSIONS FOR EACH INDIVIDUAL WINDOW. FOR SIZES NOT SHOWN, ROUND UP TO THE NEXT AVAILABLE WIDTH OR HEIGHT DIMENSION SHOWN ON THE TABLES.

2) ANY 640-SERIES PRODUCT (CASEMENT, AWNING OR FIXED CASEMENT) MAY BE ATTACHED TO THE FRAME ASSEMBLY TUBE. FOR ALL WINDOWS, USE THE WINDOW'S NOA FOR ANCHORAGE, SIZE AND DESIGN PRESSURE LIMITATIONS.

3) ALL WINDOWS IN THE COMBINATION UNIT MUST BE ABLE TO INDIVIDUALLY COMPLY WITH THE REQUIREMENTS OF THEIR RESPECTIVE NOA.

4) FRAME ASSEMBLY TUBE TO BE FASTENED TO WINDOW, AS SHOW IN DETAILS, WITH MIN. #12 X 1" SHEET METAL SCREWS. USE THE SAME SPACING AND QUANTITY AS THE OPPOSITE FRAME MEMBER.

5) THE FRAME ASSEMBLY TUBE MAY NOT EXCEED 62" IN LENGTH (AS USED IN A 63" FLANGED WINDOW) OR BE USED IN TEE OR CROSS CONFIGURATIONS.

6) THE FRAME ASSEMBLY TUBE IS NOT REQUIRED TO BE CLIPPED TO THE SUBSTRATE. ALL EXTERIOR JOINTS TO BE SEALED BY INSTALLER.

7) FOR ALL COMBINATION UNITS, ADDITIONAL INSTALLATION ANCHORS MAY NEED TO BE INSTALLED THROUGH THE WINDOW FRAMES AT 10" MAX. FROM EACH SIDE OF THE FRAME ASSEMBLY TUBE CENTERLINE. SEE TABLE BELOW:

Additional Anchors Required on each Side of the Frame Assembly Tube (FAT)			
Vertical FAT	Window Width	Anchor Type	
		A	B, C & D
	17" - 22.9"	0	0
	23" - 25.9"	0	1
	26"+	1	1
Horizontal FAT	Window Height	Anchor Type	
		A	B, C & D
	17" - 22.9"	0	0
	23" - 25.9"	0	1
	26"+	1	1

PRODUCT REVISED
as complying with the Florida Building Code
Acceptance No 16-0629.19
Expiration Date April 11, 2018
By Manuel Perez
Miami-Dade Product Control

Revised By:	
Revision A:	
Drawn By:	J ROSOWSKI
Date:	08/08/12
Description:	FRAME ASSEMBLY TUBE DETAILS
Title:	CASEMENT WINDOW DETAILS - NON IMPACT
Scale:	NTS
Sheet:	3 OF 12
Series/Model:	CA-640
Drawing No.	MD-CA640-NI
Rev.	B

1070 TECHNOLOGY DRIVE
N. VENICE, FL 34275
P.O. BOX 1529
NOKOMIS, FL 34274
CERT. OF AUTH. #29296

6/8/16

A. LYNN MILLER, P.E.
P.E.# 58705

TABLE 2:

Window Anchors Required

Window Height (in)		Window Width (in)																				
		under 23"			25-15/16"			27-3/4"			30"			33-1/2"			35"			37"		
		Anchor Group			Anchor Group			Anchor Group			Anchor Group			Anchor Group			Anchor Group			Anchor Group		
		A	B	C & D	A	B	C & D	A	B	C & D	A	B	C & D	A	B	C & D	A	B	C & D	A	B	C & D
under 23"	Jamb	2	2	2	2	2	2	2	2	2	2	2	2	2	2	2	2	2	2	2	2	2
	Head/Sill	2	2	2	2	2	2	2	2	2	2	3	2	2	3	2	3	3	3	3	3	3
25-15/16"	Jamb	2	2	2	2	2	2	2	2	2	2	2	2	2	2	2	2	2	2	2	2	2
	Head/Sill	2	2	2	2	2	2	2	2	2	2	3	2	2	3	2	3	3	3	3	3	3
38-3/8"	Jamb	4	4	4	4	4	4	4	4	4	4	4	4	4	4	4	4	4	4	4	4	4
	Head/Sill	2	2	2	2	2	2	2	2	2	2	3	2	3	3	2	3	3	3	3	4	3
48"	Jamb	4	4	4	4	6	4	4	6	4	4	6	4	4	6	4	4	6	4	6	6	4
	Head/Sill	2	2	2	2	2	2	2	2	2	2	3	2	3	3	2	3	3	3	3	4	3
50-5/8"	Jamb	4	6	4	4	6	4	4	6	4	4	6	4	6	6	4	6	6	4	6	6	4
	Head/Sill	2	2	2	2	2	2	2	2	2	2	3	2	3	3	2	3	3	3	3	4	3
60"	Jamb	6	6	4	6	6	4	6	8	4	6	8	4	6	8	4	6	8	4	6	8	4
	Head/Sill	2	2	2	2	2	2	2	2	2	2	3	2	3	3	2	3	3	3	3	4	3
63"	Jamb	6	6	6	6	8	6	6	8	6	6	8	6	6	8	6	6	8	6	6	8	6
	Head/Sill	2	2	2	2	2	2	2	2	2	2	3	2	3	3	2	3	3	3	3	4	3
72"	Jamb	6	8	6	6	8	6	8	8	6	8	10	6	8	10	6	8	10	6	8	10	6
	Head/Sill	2	2	2	2	2	2	2	2	2	2	3	2	2	3	2	3	3	3	3	3	3
76"	Jamb	6	8	6	8	8	6	8	10	6	8	10	6	8	10	6	8	10	6	8	10	6
	Head/Sill	2	2	2	2	2	2	2	2	2	2	3	2	2	3	2	3	3	3	3	3	3
84"	Jamb	8	8	6	8	10	6	8	10	6	8	10	6	8	10	6						
	Head/Sill	2	2	2	2	2	2	2	2	2	2	3	2	2	3	2						

TABLE 4:

Jamb Snubber Locations

		For All Glass Types:
Window Height	63" and less	None Required
	over 63"	12" max. from each end & 30" max O.C.

1) USE THIS TABLE FOR ALL WINDOWS PER THE ELEVATIONS ON SHEET 1. DIMENSIONS SHOWN ARE WINDOW TIP-TO-TIP.

2) FOR SIZES NOT SHOWN, ROUND UP TO THE NEXT AVAILABLE WIDTH OR HEIGHT DIMENSION SHOWN ON THE TABLE.

SAMPLE CONFIGURATIONS:

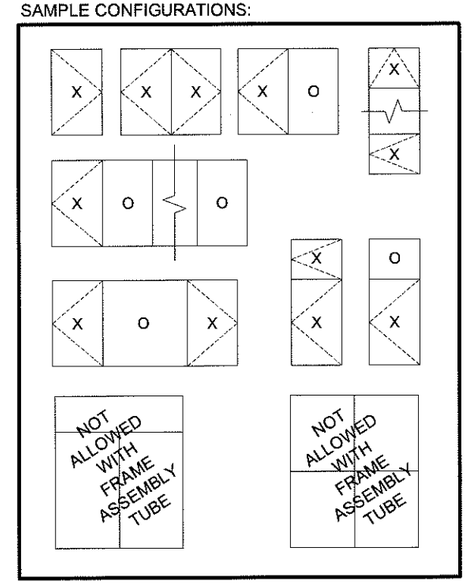

TABLE 3:

Group	Anchor	Substrate	Min. Edge Distance	Min. O.C. Distance	Min. Embedment	Anchor Plate Required?
A	1/4" steel Ultracon	Hollow Block	1"	6"	1-1/4"	No
	#14, steel SMS (G5) or #14, 410 SS SMS	S. Pine	5/8"	1"	1-3/8"	No
		6063-T5 Alum.	3/8"	5/8"	.050"	No
		A36 Steel	3/8"	5/8"	.050"	No
		A653 Stud, Gr. 33	3/8"	5/8"	.035", 20 Ga.	No
B	#12, steel SMS (G5) or #12, 410 SS SMS	S. Pine	5/8"	1"	1-3/8"	No
		6063-T5 Alum.	3/8"	5/8"	.050"	No
		A36 Steel	3/8"	5/8"	.050"	No
		A653 Stud, Gr. 33	3/8"	5/8"	.035", 20 Ga.	No
C	1/4" steel Ultracon	2.85k Concrete	2-1/2"	4"	1-3/8"	No
		2.85k Concrete	1"	4"	1-3/4"	No
		Hollow Block	2-1/2"	5"	1-1/4"	No
	#12, steel SMS (G5) or #12, 410 SS SMS	S. Pine	5/8"	1"	1-3/8"	Yes
		6063-T5 Alum.	3/8"	5/8"	.0713"	Yes
		A36 Steel	3/8"	5/8"	.050"	Yes
		A653 Stud, Gr. 33	3/8"	5/8"	.045", 18 Ga.	Yes
D	#14, steel SMS (G5) or #14, 410 SS SMS	S. Pine	5/8"	1"	1-3/8"	Yes
		6063-T5 Alum.	3/8"	5/8"	.0713"	Yes
		A36 Steel	3/8"	5/8"	.050"	Yes
		A653 Stud, Gr. 33	3/8"	5/8"	.045", 18 Ga.	Yes
	1/4" steel Ultracon	2.85k Concrete	1"	4"	1-3/4"	Yes
		2.85k Concrete	2-1/2"	4"	1-3/8"	Yes
		Hollow Block	2-1/2"	5"	1-1/4"	Yes
		Filled Block	2-1/2"	4"	1-3/4"	Yes
	1/4" 410 SS CreteFlex	3.35k Concrete	1"	5"	1-3/4"	No
		Hollow Block	2-1/2"	5"	1-1/4"	No
	5/16" steel Ultracon	3.5k Concrete	1-1/4"	5"	1-3/4"	No
		Hollow Block	3-1/8"	5"	1-1/4"	No
		Filled Block	2-1/2"	5"	1-3/4"	No

NOTES:
1) ANCHOR MUST EXTEND A MIMIMUM OF 3 THREADS BEYOND ANY METAL SUBSTRATE.
2) ANCHORS MAY BE HEXHEAD, PANHEAD OR FLATHEAD.

EXAMPLE 1: FOR WINDOW COMBINATION SHOWN BELOW; 3/16" TEMPERED GLASS, 1/4" MASONRY ANCHORS INTO CONCRETE, +/- 55 PSF DP REQUIRED, NO ANCHOR PLATE

CASEMENT ANCHORS:
A) FROM TABLE 12, ANCHORS C & D ALLOW A DP OF +70/-90.

B) FOR THE JAMB, FROM TABLE 3, ANCHOR TYPE C HAS THE ANCHOR AND SUBSTRATE DESIRED AND DOES NOT REQUIRE THE ANCHOR PLATE.

C) FROM TABLE 2, 6 ANCHORS ARE REQUIRED IN EACH JAMB.

C) SIMILARLY, 2 ANCHORS ARE REQUIRED IN THE HEAD & SILL.

D) DISTRIBUTE ANCHORS FOLLOWING GUIDELINES FROM ELEVATION ON SHEET 1.

E) PER RULES ON SHEETS 2 & 3, INSTALL 1 ADDITIONAL ANCHOR ON THE FRAME ASSEMBLY TUBE SIDE OF THE AWNING (HEAD & SILL).

FIXED CASEMENT ANCHORS (**SEE SEPERATE NOA**):
A) FROM TABLE 11, ALL ANCHORS ALLOW A DP OF +70/-90.

B) FOR THE JAMB, FROM TABLE 3, ANCHOR TYPE C HAS THE ANCHOR AND SUBSTRATE DESIRED AND DOES NOT REQUIRE THE ANCHOR PLATE.

C) FROM TABLE 2B, 5 ANCHORS ARE REQUIRED IN EACH JAMB.

C) SIMILARLY, 3 ANCHORS ARE REQUIRED IN THE HEAD & SILL.

D) DISTRIBUTE ANCHORS FOLLOWING GUIDELINES FROM ELEVATION ON SHEET 1.

E) PER RULES ON SHEET 2, INSTALL 1 ADDITIONAL ANCHOR ON THE FRAME ASSEMBLY TUBE SIDE OF THE FIXED CASEMENT (HEAD & SILL).

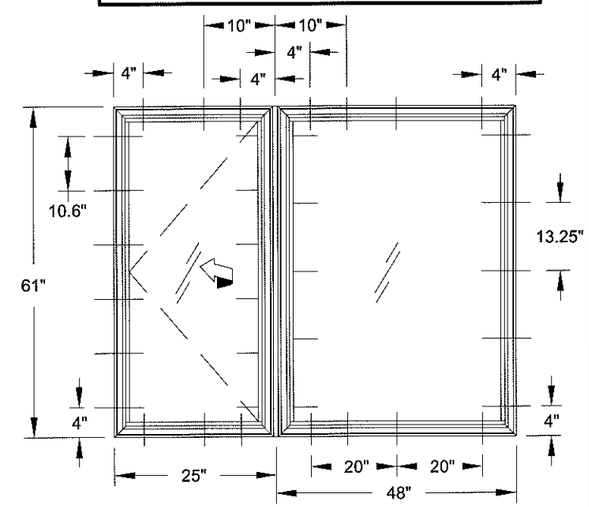

PRODUCT REVISED
as complying with the Florida Building Code
Acceptance No. 16-0629.19
Expiration Date April 11, 2018
By
Miami Dade Product Control

Revision A:
Date:
Revised By:
Date: 08/08/12
Drawn By: J ROSOWSKI
Description: ANCHOR TYPE AND QUANTITY
Title: CASEMENT WINDOW DETAILS - NON IMPACT
Series/Model: CA-640
Scale: NTS
Sheet: 4 OF 12
Drawing No. MD-CA640-NI
Rev. B

PGT®
1070 TECHNOLOGY DRIVE
N. VENICE, FL 34275
P.O. BOX 1529
NOKOMIS, FL 34274
CERT. OF AUTH. #29296

6/8/16

A. LYNN MILLER, P.E.
P.E.# 58705

TABLE 5:

Window Height	Design Pressure (psf) for Single Windows, All Anchor Groups						
	Window Width						
	under 23"	25-15/16"	27-3/4"	30"	33-1/2"	35"	37"
under 23"	+/- 79.6	+/- 71.5	+/- 67.9	+/- 64.5	+/- 60.6	+/- 59.2	+/- 57.7
25-15/16"	+/- 71.5	+/- 70.5	+/- 66.2	+/- 62.1	+/- 57.6	+/- 56	+/- 54.3
38-3/8"	+/- 56.8	+/- 53.3	+/- 51.6	+/- 50.1	+/- 48.5	+/- 48	+/- 47.7
48"	+/- 52.3	+/- 48.3	+/- 46.4	+/- 44.4	+/- 42	+/- 41.1	+/- 40.2
50-5/8"	+/- 51.5	+/- 46.9	+/- 45.4	+/- 43.3	+/- 40.8	+/- 39.9	+/- 39
60"	+/- 45.8	+/- 38	+/- 36.3	+/- 35.9	+/- 36.2	+/- 36	+/- 35.6
63"	+/- 44.5	+/- 36.2	+/- 33.8	+/- 33	+/- 33.6	+/- 33.6	+/- 33.2
72"	+/- 41.6	+/- 32	+/- 28.8	+/- 26.8			
76"	+/- 40.7	+/- 30.8	+/- 27.4	+/- 25.2			
84"	+/- 39.4	+/- 29.3	+/- 25.5				

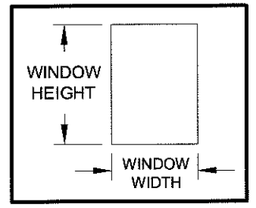

SEE SHEETS 1 & 4 FOR WINDOW ANCHOR LOCATIONS AND QUANTITIES.

TABLE 6:

Window Height	Design Pressure (psf) for Windows Attached to a Vertical Frame Assembly Tube								
	Window Width								
	under 23"			25-15/16"	27-3/4"	30"	33-1/2"	35"	37"
	Anchor Group	Anchor Group	Anchor Group	Anchor Group	Anchor Group	Anchor Group	Anchor Group	Anchor Group	Anchor Group
	A	B	C & D	All	All	All	All	All	All
under 23"	+70/-79.6	+70/-79.6	+70/-79.6	+70/-71.5	+/-67.9	+/-64.5	+/-60.6	+/-59.2	+/-57.7
25-15/16"	+70/-71.5	+70/-71.5	+70/-71.5	+70/-70.5	+/-66.2	+/-62.1	+/-57.6	+/-56	+/-54.3
38-3/8"	+/-56.8	+/-56.8	+/-56.8	+/-53.3	+/-51.6	+/-50.1	+/-48.5	+/-48	+/-47.7
48"	+/-52.3	+/-52.3	+/-52.3	+/-48.3	+/-46.4	+/-44.4	+/-42	+/-41.1	+/-40.2
50-5/8"	+/-51.5	+/-51.5	+/-51.5	+/-46.9	+/-45.4	+/-43.3	+/-40.8	+/-39.9	+/-39
60"	+/-45.8	+/-45.8	+/-45.8	+/-38	+/-36.3	+/-35.9	+/-36.2	+/-36	+/-35.6
63"	+/-44.5	+/-43.6	+/-44.5	+/-36.2	+/-33.8	+/-33	+/-33.6	+/-33.6	+/-33.2

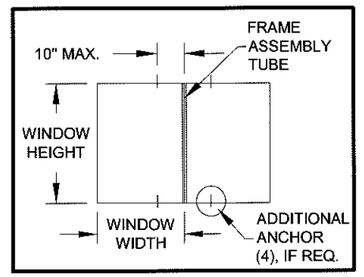

SEE SHEETS 1 & 4 FOR WINDOW ANCHOR LOCATIONS AND QUANTITIES. SEE SHEET 3 FOR ANY ADDITIONAL ANCHORS REQUIRED FOR THE FRAME ASSEMBLY TUBE.

TABLE 7:

Window Height	Design Pressure (psf) for Windows Attached to a Horizontal Frame Assembly Tube						
	Window Width						
	under 23"	25-15/16"	27-3/4"	30"	33-1/2"	35"	37"
	Anchor Group	Anchor Group	Anchor Group	Anchor Group	Anchor Group	Anchor Group	Anchor Group
	All	All	All	All	All	All	All
under 23"	+70/-79.6	+70/-71.5	+/-67.9	+/-64.5	+/-60.6	+/-59.2	+/-57.7
25-15/16"	+70/-71.5	+70/-70.5	+/-66.2	+/-62.1	+/-57.6	+/-56	+/-54.3
38-3/8"	+/-56.8	+/-53.3	+/-51.6	+/-50.1	+/-48.5	+/-48	+/-47.7
48"	+/-52.3	+/-48.3	+/-46.4	+/-44.4	+/-42	+/-41.1	+/-40.2
50-5/8"	+/-51.5	+/-46.9	+/-45.4	+/-43.3	+/-40.8	+/-39.9	+/-39
60"	+/-45.8	+/-38	+/-36.3	+/-35.9	+/-36.2	+/-36	+/-35.6
63"	+/-44.5	+/-36.2	+/-33.8	+/-33	+/-33.6	+/-33.6	+/-33.2
72"	+/-41.6	+/-32	+/-28.8	+/-26.8			
76"	+/-40.7	+/-30.8	+/-27.4	+/-25.2			
84"	+/-39.4	+/-29.3	+/-25.5				

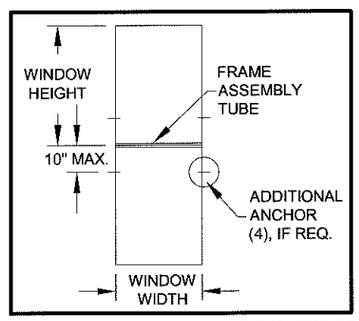

SEE SHEETS 1 & 4 FOR WINDOW ANCHOR LOCATIONS AND QUANTITIES. SEE SHEET 3 FOR ANY ADDITIONAL ANCHORS REQUIRED FOR THE FRAME ASSEMBLY TUBE.

NOTES:
1) SEE SHEET 4 FOR ADDITIONAL SAMPLE CONFIGURATIONS.
2) SEE SHEET 4 FOR SNUBBER REQUIREMENTS.

FOR GLASS TYPES:
1) 1/8" Annealed
2) 1/8" Tempered

PRODUCT REVISED
as complying with the Florida Building Code
Acceptance No 16-0629.19
Expiration Date April 11, 2018
By Miami Dade Product Control

Revision A:
Revised By:
Date:
Drawn By: J ROSOWSKI
Date: 08/08/12
Description: DESIGN PRESSURES PER GLAZING TYPE
Title: CASEMENT WINDOW DETAILS - NON IMPACT
Series/Model: CA-640
Scale: NTS
Sheet: 5 OF 12
Drawing No. MD-CA640-NI
Rev: B

1070 TECHNOLOGY DRIVE
N. VENICE, FL 34275
P.O. BOX 1529
NOKOMIS, FL 34274
CERT. OF AUTH. #29296

A. L. 6/8/16
A. LYNN MILLER, P.E.
P.E.# 58705

FOR GLASS TYPES:

3) 3/16" Annealed
5) 1/4" Annealed

PRODUCT REVISED
as complying with the Florida Building Code
Acceptance No 16-0629.19
Expiration Date April 11, 2018
By Manuel Perez
Miami-Dade Product Control

TABLE 8:

Window Height	Design Pressure (psf) for Single Windows, All Anchor Groups						
	Window Width						
	under 23"	25-15/16"	27-3/4"	30"	33-1/2"	35"	37"
under 23"	+90/-113.7	+90/-102.1	+90/-97	+90/-92.1	+/- 86.6	+/- 84.6	+/- 82.5
25-15/16"	+90/-102.1	+90/-100.8	+90/-94.6	+/- 88.7	+/- 82.2	+/- 80	+/- 77.6
38-3/8"	+/- 81.1	+/- 76.1	+/- 73.8	+/- 71.5	+/- 69.2	+/- 68.6	+/- 68.2
48"	+/- 74.7	+/- 69	+/- 66.2	+/- 63.4	+/- 59.9	+/- 58.8	+/- 57.5
50-5/8"	+/- 73.5	+/- 67.7	+/- 64.9	+/- 61.9	+/- 58.3	+/- 57.1	+/- 55.7
60"	+/- 70.3	+/- 64.3	+/- 61.3	+/- 58.1	+/- 54.1	+/- 52.7	+/- 51.1
63"	+/- 69.5	+/- 63.4	+/- 60.4	+/- 57.2	+/- 53	+/- 51.4	+/- 50
72"	+/- 67.6	+/- 61.4	+/- 58.3	+/- 54.3	+/- 43.6	+/- 42.3	+/- 40.7
76"	+/- 67	+/- 60.7	+/- 57.6	+/- 52.3	+/- 42.9	+/- 41	+/- 39.4
84"	+/- 65.9	+/- 59.6	+/- 56.4	+/- 45.4	+/- 40.1		

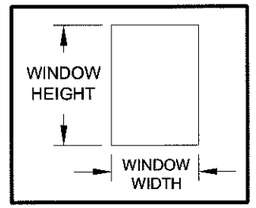

SEE SHEETS 1 & 4 FOR WINDOW ANCHOR LOCATIONS AND QUANTITIES.

TABLE 9:

Window Height	Design Pressure (psf) for Windows Attached to a Vertical Frame Assembly Tube									
	Window Width									
	under 23"			25-15/16"		27-3/4"	30"	33-1/2"	35"	37"
	Anchor Group	Anchor Group	Anchor Group	Anchor Group		Anchor Group	Anchor Group	Anchor Group	Anchor Group	Anchor Group
	A	B	C & D	A	B, C & D	All	All	All	All	All
under 23"	+70/-90	+70/-90	+70/-90	+70/-90	+70/-90	+70/-90	+70/-90	+70/-86.6	+70/-84.6	+70/-82.5
25-15/16"	+70/-90	+70/-90	+70/-90	+70/-90	+70/-90	+70/-90	+70/-88.7	+70/-82.2	+70/-80	+70/-77.6
38-3/8"	+70/-81.1	+70/-71.6	+70/-81.1	+70/-76.1	+70/-76.1	+70/-73.8	+70/-71.5	+/-69.2	+/-68.6	+/-68.2
48"	+70/-73.1	+/-57.3	+70/-74.7	+/-64.8	+/-69	+/-66.2	+/-63.4	+/-59.9	+/-58.8	+/-57.5
50-5/8"	+/-69.3	+/-54.3	+70/-73.5	+/-61.4	+/-67.7	+/-64.9	+/-61.9	+/-58.3	+/-57.1	+/-55.7
60"	+/-58.5	+/-45.8	+70/-70.3	+/-51.8	+/-64.3	+/-61.3	+/-58.1	+/-54.1	+/-52.7	+/-51.1
63"	+/-55.7	+/-43.6	+/-69.5	+/-49.3	+/-63.4	+/-60.4	+/-57.2	+/-53	+/-51.4	+/-50

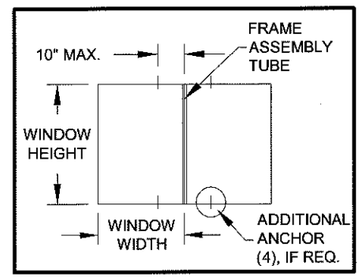

SEE SHEETS 1 & 4 FOR WINDOW ANCHOR LOCATIONS AND QUANTITIES. SEE SHEET 3 FOR ANY ADDITIONAL ANCHORS REQUIRED FOR THE FRAME ASSEMBLY TUBE.

TABLE 10:

Window Height	Design Pressure (psf) for Windows Attached to a Horizontal Frame Assembly Tube									
	Window Width									
	under 23"	25-15/16"	27-3/4"	30"	33-1/2"		35"		37"	
	Anchor Group	Anchor Group	Anchor Group	Anchor Group	Anchor Group		Anchor Group		Anchor Group	
	All	All	All	All	B	A, C & D	B	A, C & D	B	A, C & D
under 23"	+70/-90	+70/-90	+70/-90	+70/-90	+70/-82.1	+70/-86.6	+70/-78.5	+70/-84.6	+70/-74.3	+70/-82.5
25-15/16"	+70/-90	+70/-90	+70/-90	+70/-88.7	+70/-82.2	+70/-82.2	+70/-80	+70/-80	+70/-77.6	+70/-77.6
38-3/8"	+70/-81.1	+70/-76.1	+70/-73.8	+70/-71.5	+/-69.2	+/-69.2	+/-68.6	+/-68.6	+/-68.2	+/-68.2
48"	+70/-74.7	+/-69	+/-66.2	+/-63.4	+/-59.9	+/-59.9	+/-58.8	+/-58.8	+/-57.5	+/-57.5
50-5/8"	+70/-73.5	+/-67.7	+/-64.9	+/-61.9	+/-58.3	+/-58.3	+/-57.1	+/-57.1	+/-55.7	+/-55.7
60"	+70/-70.3	+/-64.3	+/-61.3	+/-58.1	+/-54.1	+/-54.1	+/-52.7	+/-52.7	+/-51.1	+/-51.1
63"	+/-69.5	+/-63.4	+/-60.4	+/-57.2	+/-53	+/-53	+/-51.4	+/-51.4	+/-50	+/-50
72"	+/-67.6	+/-61.4	+/-58.3	+/-54.3	+/-43.6	+/-43.6	+/-42.3	+/-42.3	+/-40.7	+/-40.7
76"	+/-67	+/-60.7	+/-57.6	+/-52.3	+/-42.9	+/-42.9	+/-41	+/-41	+/-39.4	+/-39.4
84"	+/-65.9	+/-59.6	+/-56.4	+/-45.4	+/-40.1	+/-40.1				

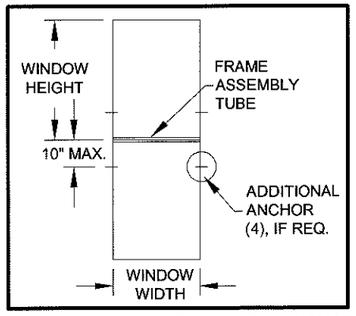

SEE SHEETS 1 & 4 FOR WINDOW ANCHOR LOCATIONS AND QUANTITIES. SEE SHEET 3 FOR ANY ADDITIONAL ANCHORS REQUIRED FOR THE FRAME ASSEMBLY TUBE.

NOTES:
1) SEE SHEET 4 FOR ADDITIONAL SAMPLE CONFIGURATIONS.
2) SEE SHEET 4 FOR SNUBBER REQUIREMENTS.

Revision A:
Date:
Revised By:
Date: 08/08/12
Drawn By: J ROSOWSKI
Description: DESIGN PRESSURES PER GLAZING TYPE
Title: CASEMENT WINDOW DETAILS - NON IMPACT
Rev: B
Drawing No. MD-CA640-NI
Sheet: 6 OF 12
Scale: NTS
Series/Model: CA-640

1070 TECHNOLOGY DRIVE
N. VENICE, FL 34275
P.O. BOX 1529
NOKOMIS, FL 34274
CERT. OF AUTH. #29296

6/8/16

A. LYNN MILLER, P.E.
P.E.# 58705

FOR GLASS TYPES:
4) 3/16" Tempered
6) 1/4" Tempered

PRODUCT REVISED
as complying with the Florida
Building Code
Acceptance No 16-0629.19
Expiration Date April 11, 2018
By Manuel Sosa
Miami-Dade Product Control

TABLE 11:

Window Height	Design Pressure (psf) for Single Windows, All Anchor Groups — Window Width: under 23"	23"	27-3/4"	30"	33-1/2"	35"	37"
under 23"	+90/-150	+90/-150	+90/-150	+90/-150	+90/-150	+90/-150	+90/-150
25-15/16"	+90/-150	+90/-150	+90/-150	+90/-150	+90/-150	+90/-150	+90/-150
38-3/8"	+90/-150	+90/-150	+90/-150	+90/-150	+90/-150	+90/-150	+90/-150
48"	+90/-150	+90/-150	+90/-150	+90/-150	+90/-150	+90/-150	+90/-150
50-5/8"	+90/-150	+90/-150	+90/-150	+90/-150	+90/-150	+90/-150	+90/-150
60"	+90/-150	+90/-150	+90/-150	+90/-150	+90/-150	+90/-146.8	+90/-142.2
63"	+90/-150	+90/-150	+90/-150	+90/-150	+90/-148	+90/-144	+90/-139.2
72"	+90/-150	+90/-150	+90/-150	+90/-150	+90/-141.6	+90/-137.4	+90/-132.4
76"	+90/-150	+90/-150	+90/-150	+90/-150	+90/-139.4	+90/-135.1	+90/-130
84"	+90/-150	+90/-150	+90/-150	+90/-147.7	+90/-135.8		

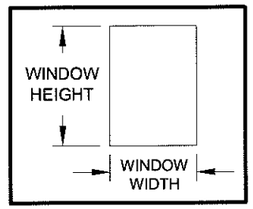

SEE SHEETS 1 & 4 FOR WINDOW ANCHOR LOCATIONS AND QUANTITIES.

TABLE 12:

Design Pressure (psf) for Windows Attached to a Vertical Frame Assembly Tube

Window Height	Window Width: under 23" Anchor Group A	under 23" B	under 23" C	under 23" D	25-15/16" Anchor Group A	25-15/16" B	25-15/16" C & D	27-3/4" Anchor Group B	27-3/4" A, C & D	30" Anchor Group A	30" B	30" C & D	33-1/2" Anchor Group A	33-1/2" B	33-1/2" C & D	35" Anchor Group A	35" B	35" C & D	37" Anchor Group A	37" B	37" C & D
under 23"	+70/-90	+70/-90	+70/-90	+70/-90	+70/-90	+70/-90	+70/-90	+70/-90	+70/-90	+70/-90	+70/-90	+70/-90	+70/-90	+70/-90	+70/-90	+70/-90	+70/-90	+70/-90	+70/-90	+70/-90	+70/-90
25-15/16"	+70/-90	+70/-90	+70/-90	+70/-90	+70/-90	+70/-90	+70/-90	+70/-90	+70/-90	+70/-90	+70/-90	+70/-90	+70/-90	+70/-90	+70/-90	+70/-90	+70/-90	+70/-90	+70/-90	+70/-90	+70/-90
38-3/8"	+70/-90	+70/-71.6	+70/-90	+70/-90	+70/-81	+70/-90	+70/-90	+70/-90	+70/-90	+70/-90	+70/-90	+70/-90	+70/-90	+70/-90	+70/-90	+70/-90	+70/-90	+70/-90	+70/-90	+70/-90	+70/-90
48"	+70/-73.1	+/-57.3	+70/-90	+70/-90	+/-64.8	+70/-90	+70/-90	+70/-90	+70/-90	+70/-90	+70/-90	+70/-90	+70/-90	+70/-90	+70/-90	+70/-90	+70/-90	+70/-90	+70/-90	+70/-90	+70/-90
50-5/8"	+/-69.3	+/-54.3	+70/-90	+70/-90	+/-61.4	+70/-90	+70/-90	+70/-90	+70/-90	+70/-90	+70/-90	+70/-90	+70/-90	+70/-90	+70/-90	+70/-90	+70/-89.2	+70/-90	+70/-90	+70/-90	+70/-90
60"	+/-58.5	+/-45.8	+70/-84.7	+70/-90	+/-51.8	+70/-81.2	+70/-90	+70/-75.9	+70/-90	+70/-89.6	+70/-87.8	+70/-90	+70/-90	+70/-78.6	+70/-90	+70/-90	+70/-75.2	+70/-90	+70/-90	+70/-85.4	+70/-90
63"	+/-55.7	+/-43.6	+70/-80.7	+70/-89.5	+/-49.3	+70/-77.3	+70/-90	+70/-72.3	+70/-90	+70/-85.3	+70/-83.6	+70/-90	+70/-90	+70/-74.9	+70/-90	+70/-90	+70/-71.6	+70/-90	+70/-86.5	+70/-81.3	+70/-90

TABLE 13:

Design Pressure (psf) for Windows Attached to a Horizontal Frame Assembly Tube

Window Height	Window Width: under 23" Anchor Group All	25-15/16" Anchor Group All	27-3/4" Anchor Group All	30" Anchor Group All	33-1/2" Anchor Group B	33-1/2" A, C & D	35" Anchor Group A	35" B	35" C & D	37" Anchor Group A	37" B	37" C & D
under 23"	+70/-90	+70/-90	+70/-90	+70/-90	+70/-82.1	+70/-90	+70/-90	+70/-78.5	+70/-90	+70/-90	+70/-74.3	+70/-90
25-15/16"	+70/-90	+70/-90	+70/-90	+70/-90	+70/-90	+70/-90	+70/-88.8	+70/-90	+70/-90	+70/-84	+70/-90	+70/-90
38-3/8"	+70/-90	+70/-90	+70/-90	+70/-90	+70/-90	+70/-90	+70/-90	+70/-90	+70/-90	+70/-90	+70/-90	+70/-90
48"	+70/-90	+70/-90	+70/-90	+70/-90	+70/-90	+70/-90	+70/-90	+70/-90	+70/-90	+70/-90	+70/-90	+70/-90
50-5/8"	+70/-90	+70/-90	+70/-90	+70/-90	+70/-90	+70/-90	+70/-90	+70/-90	+70/-90	+70/-90	+70/-90	+70/-90
60"	+70/-90	+70/-90	+70/-90	+70/-90	+70/-90	+70/-90	+70/-90	+70/-90	+70/-90	+70/-90	+70/-90	+70/-90
63"	+70/-90	+70/-90	+70/-90	+70/-90	+70/-90	+70/-90	+70/-90	+70/-90	+70/-90	+70/-90	+70/-90	+70/-90
72"	+70/-90	+70/-90	+70/-90	+70/-90	+70/-90	+70/-90	+70/-90	+70/-90	+70/-90	+70/-90	+70/-90	+70/-90
76"	+70/-90	+70/-90	+70/-90	+70/-90	+70/-90	+70/-90	+70/-90	+70/-90	+70/-90	+70/-90	+70/-90	+70/-90
84"	+70/-90	+70/-90	+70/-90	+70/-90	+70/-90	+70/-90						

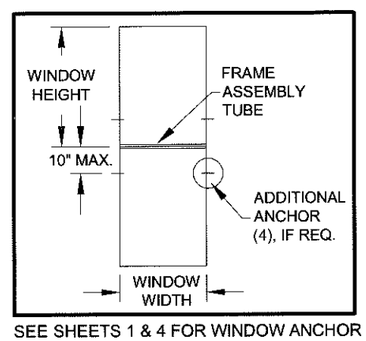

SEE SHEETS 1 & 4 FOR WINDOW ANCHOR LOCATIONS AND QUANTITIES. SEE SHEET 3 FOR ANY ADDITIONAL ANCHORS REQUIRED FOR THE FRAME ASSEMBLY TUBE.

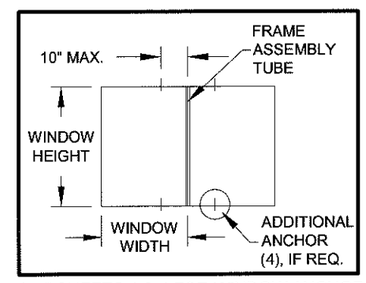

SEE SHEETS 1 & 4 FOR WINDOW ANCHOR LOCATIONS AND QUANTITIES. SEE SHEET 3 FOR ANY ADDITIONAL ANCHORS REQUIRED FOR THE FRAME ASSEMBLY TUBE.

NOTES:
1) SEE SHEET 4 FOR ADDITIONAL SAMPLE CONFIGURATIONS.
2) SEE SHEET 4 FOR SNUBBER REQUIREMENTS.

Revision A:
Date:
Revised By:
Date: 08/08/12
Drawn By: J ROSOWSKI
Description: DESIGN PRESSURES PER GLAZING TYPE
Title: CASEMENT WINDOW DETAILS - NON IMPACT
Series/Model: CA-640
Scale: NTS
Sheet: 7 OF 12
Drawing No. MD-CA640-NI
Rev: B

1070 TECHNOLOGY DRIVE
N. VENICE, FL 34275
P.O. BOX 1529
NOKOMIS, FL 34274
CERT. OF AUTH. #29296

6/8/16

A. LYNN MILLER, P.E.
P.E.# 58705

FOR GLASS TYPES:

7) 9/16" IG: (1/8" An - 5/16" Air - 1/8" An)

TABLE 14:

Window Height	Design Pressure (psf) for Single Windows, All Anchor Groups — Window Width: under 23"	25-15/16"	27-3/4"	30"	33-1/2"	35"	37"
under 23"	+90/-136.4	+90/-122.5	+90/-116.4	+90/-110.6	+90/-103.9	+90/-101.6	+90/-98.9
25-15/16"	+90/-122.5	+90/-120.9	+90/-113.5	+90/-106.5	+90/-98.7	+90/-96	+90/-93.1
38-3/8"	+90/-97.4	+90/-91.3	+/- 88.5	+/- 85.8	+/- 83.1	+/- 82.4	+/- 81.8
48"	+/- 89.7	+/- 82.8	+/- 79.5	+/- 76	+/- 71.9	+/- 70.5	+/- 69
50-5/8"	+/- 88.2	+/- 81.3	+/- 77.8	+/- 74.3	+/- 70	+/- 68.5	+/- 66.8
60"	+/- 82.4	+/- 68.4	+/- 65.3	+/- 64.7	+/- 65	+/- 63.3	+/- 61.3
63"	+/- 80.1	+/- 65.2	+/- 60.8	+/- 59.5	+/- 60.5	+/- 60.5	+/- 59.7
72"	+/- 74.9	+/- 57.7	+/- 51.9	+/- 48.3	+/- 48.3	+/- 47.5	+/- 45.8
76"	+/- 73.2	+/- 55.4	+/- 49.3	+/- 45.4	+/- 44.5	+/- 44.9	+/- 45
84"	+/- 71	+/- 52.7	+/- 45.8	+/- 40.8	+/- 37.8		

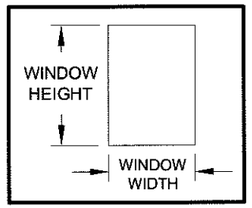

SEE SHEETS 1 & 4 FOR WINDOW ANCHOR LOCATIONS AND QUANTITIES.

TABLE 15:

Window Height	Design Pressure (psf) for Windows Attached to a Vertical Frame Assembly Tube — Window Width: under 23" Anchor Group A	under 23" Anchor Group B	under 23" Anchor Group C & D	25-15/16" Anchor Group A	25-15/16" Anchor Group B, C & D	27-3/4" Anchor Group All	30" Anchor Group All	33-1/2" Anchor Group B	33-1/2" Anchor Group A, C & D	35" Anchor Group All	37" Anchor Group All
under 23"	+70/-90	+70/-90	+70/-90	+70/-90	+70/-90	+70/-90	+70/-90	+70/-90	+70/-90	+70/-90	+70/-90
25-15/16"	+70/-90	+70/-90	+70/-90	+70/-90	+70/-90	+70/-90	+70/-90	+70/-90	+70/-90	+70/-90	+70/-90
38-3/8"	+70/-90	+70/-71.6	+70/-90	+70/-81	+70/-90	+70/-88.5	+70/-85.8	+70/-83.1	+70/-83.1	+70/-82.4	+70/-81.8
48"	+70/-73.1	+/-57.3	+70/-89.7	+/-64.8	+70/-82.8	+70/-79.5	+70/-76	+70/-71.9	+70/-71.9	+70/-70.5	+/-69
50-5/8"	+/-69.3	+/-54.3	+70/-88.2	+/-61.4	+70/-81.3	+70/-77.8	+70/-74.3	+/-70	+/-70	+/-68.5	+/-66.8
60"	+/-58.5	+/-45.8	+70/-82.4	+/-51.8	+/-68.4	+/-65.3	+/-64.7	+/-62.9	+/-65	+/-63.3	+/-61.3
63"	+/-55.7	+/-43.6	+70/-80.1	+/-49.3	+/-65.2	+/-60.8	+/-59.5	+/-59.9	+/-60.5	+/-60.5	+/-59.7

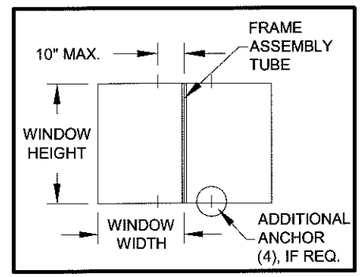

SEE SHEETS 1 & 4 FOR WINDOW ANCHOR LOCATIONS AND QUANTITIES. SEE SHEET 3 FOR ANY ADDITIONAL ANCHORS REQUIRED FOR THE FRAME ASSEMBLY TUBE.

TABLE 16:

Window Height	Design Pressure (psf) for Windows Attached to a Horizontal Frame Assembly Tube — Window Width: under 23" Anchor Group All	25-15/16" Anchor Group All	27-3/4" Anchor Group All	30" Anchor Group All	33-1/2" Anchor Group B	33-1/2" Anchor Group A, C & D	35" Anchor Group A	35" Anchor Group B	35" Anchor Group C & D	37" Anchor Group A	37" Anchor Group B	37" Anchor Group C & D
under 23"	+70/-90	+70/-90	+70/-90	+70/-90	+70/-82.1	+70/-90	+70/-90	+70/-78.5	+70/-90	+70/-90	+70/-74.3	+70/-90
25-15/16"	+70/-90	+70/-90	+70/-90	+70/-90	+70/-90	+70/-90	+70/-88.8	+70/-90	+70/-90	+70/-84	+70/-90	+70/-90
38-3/8"	+70/-90	+70/-90	+70/-88.5	+70/-85.8	+70/-83.1	+70/-83.1	+70/-82.4	+70/-82.4	+70/-82.4	+70/-81.8	+70/-81.8	+70/-81.8
48"	+70/-89.7	+70/-82.8	+70/-79.5	+70/-76	+70/-71.9	+70/-71.9	+70/-70.5	+70/-70.5	+70/-70.5	+/-69	+/-69	+/-69
50-5/8"	+70/-88.2	+70/-81.3	+70/-77.8	+70/-74.3	+/-70	+/-70	+/-68.5	+/-68.5	+/-68.5	+/-66.8	+/-66.8	+/-66.8
60"	+70/-82.4	+/-68.4	+/-65.3	+/-64.7	+/-65	+/-65	+/-63.3	+/-63.3	+/-63.3	+/-61.3	+/-61.3	+/-61.3
63"	+70/-80.1	+/-65.2	+/-60.8	+/-59.5	+/-60.5	+/-60.5	+/-60.5	+/-60.5	+/-60.5	+/-59.7	+/-59.7	+/-59.7
72"	+70/-74.9	+/-57.7	+/-51.9	+/-48.3	+/-48.3	+/-48.3	+/-47.5	+/-47.5	+/-47.5	+/-45.8	+/-45.8	+/-45.8
76"	+70/-73.2	+/-55.4	+/-49.3	+/-45.4	+/-44.5	+/-44.5	+/-44.9	+/-44.9	+/-44.9	+/-45	+/-45	+/-45
84"	+70/-71	+/-52.7	+/-45.8	+/-40.8	+/-37.8	+/-37.8						

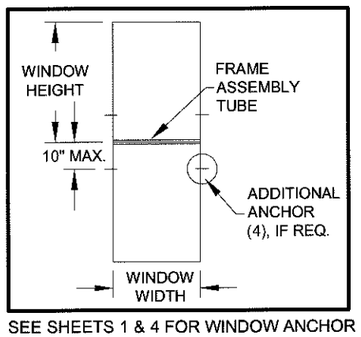

SEE SHEETS 1 & 4 FOR WINDOW ANCHOR LOCATIONS AND QUANTITIES. SEE SHEET 3 FOR ANY ADDITIONAL ANCHORS REQUIRED FOR THE FRAME ASSEMBLY TUBE.

NOTES:
1) SEE SHEET 4 FOR ADDITIONAL SAMPLE CONFIGURATIONS.
2) SEE SHEET 4 FOR SNUBBER REQUIREMENTS.

PRODUCT REVISED
as complying with the Florida Building Code
Acceptance No. 16-0629.19
Expiration Date April 11, 2018
By Wanneel Jorge
Miami-Dade Product Control

Revision A:
Date:
Revised By:

Date: 08/08/12
Drawn By: J ROSOWSKI
Description: DESIGN PRESSURES PER GLAZING TYPE
Title: CASEMENT WINDOW DETAILS - NON IMPACT
Series/Model: CA-640
Scale: NTS
Sheet: 8 OF 12
Drawing No. MD-CA640-NI
Rev. B

1070 TECHNOLOGY DRIVE
N. VENICE, FL 34275
P.O. BOX 1529
NOKOMIS, FL 34274
CERT. OF AUTH. #29296

6/8/16

A. LYNN MILLER, P.E.
P.E.# 58705

FOR GLASS TYPES:

8) 9/16" IG: (1/8" T - 5/16" Air - 1/8" T)

PRODUCT REVISED
as complying with the Florida
Building Code
Acceptance No 16-0629.19
Expiration Date April 11, 2018
By Manuel Inez
Miami Dade Product Control

TABLE 17:

Window Height	Design Pressure (psf) for Single Windows, All Anchor Groups						
	Window Width						
	under 23"	25-15/16"	27-3/4"	30"	33-1/2"	35"	37"
under 23"	+90/-150	+90/-150	+90/-150	+90/-150	+90/-150	+90/-150	+90/-150
25-15/16"	+90/-150	+90/-150	+90/-150	+90/-150	+90/-150	+90/-150	+90/-150
38-3/8"	+90/-150	+90/-150	+90/-150	+90/-150	+90/-150	+90/-150	+90/-150
48"	+90/-150	+90/-150	+90/-150	+90/-150	+90/-150	+90/-150	+90/-149.4
50-5/8"	+90/-150	+90/-150	+90/-150	+90/-150	+90/-150	+90/-148.4	+90/-144.7
60"	+90/-150	+90/-150	+90/-150	+90/-150	+90/-140.8	+90/-137	+90/-132.8
63"	+90/-150	+90/-150	+90/-150	+90/-148.6	+90/-138.2	+90/-134.4	+90/-130
72"	+90/-150	+90/-150	+90/-150	+90/-143.1	+/- 48.3	+/- 47.5	+/- 45.8
76"	+90/-150	+90/-150	+90/-149.8	+90/-141.1	+/- 44.5	+/- 44.9	+/- 45
84"	+90/-150	+90/-150	+90/-146.7	+/- 40.8	+/- 37.8		

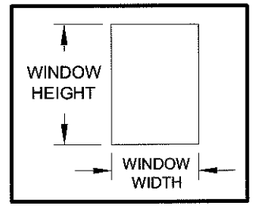

SEE SHEETS 1 & 4 FOR WINDOW ANCHOR LOCATIONS AND QUANTITIES.

TABLE 18:

Window Height	Design Pressure (psf) for Windows Attached to a Vertical Frame Assembly Tube																			
	Window Width																			
	under 23"				25-15/16"			27-3/4"		30"			33-1/2"			35"		37"		
	Anchor Group				Anchor Group			Anchor Group		Anchor Group			Anchor Group			Anchor Group		Anchor Group		
	A	B	C	D	A	B	C & D	A, C & D	B	A	B	C & D	A	B	C & D	A, C & D	B	A	B	C & D
under 23"	+70/-90	+70/-90	+70/-90	+70/-90	+70/-90	+70/-90	+70/-90	+70/-90	+70/-90	+70/-90	+70/-90	+70/-90	+70/-90	+70/-90	+70/-90	+70/-90	+70/-90	+70/-90	+70/-90	+70/-90
25-15/16"	+70/-90	+70/-90	+70/-90	+70/-90	+70/-90	+70/-90	+70/-90	+70/-90	+70/-90	+70/-90	+70/-90	+70/-90	+70/-90	+70/-90	+70/-90	+70/-90	+70/-90	+70/-90	+70/-90	+70/-90
38-3/8"	+70/-90	+70/-71.6	+70/-90	+70/-90	+70/-81	+70/-90	+70/-90	+70/-90	+70/-90	+70/-90	+70/-90	+70/-90	+70/-90	+70/-90	+70/-90	+70/-90	+70/-90	+70/-90	+70/-90	+70/-90
48"	+70/-73.1	+/-57.3	+70/-90	+70/-90	+/-64.8	+70/-90	+70/-90	+70/-90	+70/-90	+70/-90	+70/-90	+70/-90	+70/-90	+70/-90	+70/-90	+70/-90	+70/-90	+70/-90	+70/-90	+70/-90
50-5/8"	+/-69.3	+/-54.3	+70/-90	+70/-90	+/-61.4	+70/-90	+70/-90	+70/-90	+70/-90	+70/-90	+70/-90	+70/-90	+70/-90	+70/-90	+70/-90	+70/-90	+70/-89.2	+70/-90	+70/-90	+70/-90
60"	+/-58.5	+/-45.8	+70/-84.7	+70/-90	+/-51.8	+70/-81.2	+70/-90	+70/-90	+70/-75.9	+70/-89.6	+70/-87.8	+70/-90	+70/-80.3	+70/-78.6	+70/-90	+70/-90	+70/-75.2	+70/-90	+70/-71.2	+70/-90
63"	+/-55.7	+/-43.6	+70/-80.7	+70/-89.5	+/-49.3	+70/-77.3	+70/-90	+70/-90	+70/-72.3	+70/-85.3	+70/-83.6	+70/-90	+70/-76.5	+70/-74.9	+70/-90	+70/-90	+70/-71.6	+70/-86.5	+/-67.8	+70/-90

TABLE 19:

Window Height (in)	Design Pressure (psf) for Windows Attached to Horizontal Frame Assembly Tube											
	Window Width (in)											
	under 23"	25-15/16"	27-3/4"	30"	33-1/2"		35"			37"		
	Anchor Group	Anchor Group	Anchor Group	Anchor Group	Anchor Group		Anchor Group			Anchor Group		
	All	All	All	All	B	A, C & D	A	B	C & D	A	B	C & D
under 23"	+70/-90	+70/-90	+70/-90	+70/-90	+70/-82.1	+70/-90	+70/-90	+70/-78.5	+70/-90	+70/-90	+70/-74.3	+70/-90
25-15/16"	+70/-90	+70/-90	+70/-90	+70/-90	+70/-90	+70/-90	+70/-88.8	+70/-90	+70/-90	+70/-84	+70/-90	+70/-90
38-3/8"	+70/-90	+70/-90	+70/-90	+70/-90	+70/-90	+70/-90	+70/-90	+70/-90	+70/-90	+70/-90	+70/-90	+70/-90
48"	+70/-90	+70/-90	+70/-90	+70/-90	+70/-90	+70/-90	+70/-90	+70/-90	+70/-90	+70/-90	+70/-90	+70/-90
50-5/8"	+70/-90	+70/-90	+70/-90	+70/-90	+70/-90	+70/-90	+70/-90	+70/-90	+70/-90	+70/-90	+70/-90	+70/-90
60"	+70/-90	+70/-90	+70/-90	+70/-90	+70/-90	+70/-90	+70/-90	+70/-90	+70/-90	+70/-90	+70/-90	+70/-90
63"	+70/-90	+70/-90	+70/-90	+70/-90	+70/-90	+70/-90	+70/-90	+70/-90	+70/-90	+70/-90	+70/-90	+70/-90
72"	+70/-90	+70/-90	+70/-90	+70/-90	+/-48.3	+/-48.3	+/-47.5	+/-47.5	+/-47.5	+/-45.8	+/-45.8	+/-45.8
76"	+70/-90	+70/-90	+70/-90	+70/-90	+/-44.5	+/-44.5	+/-44.9	+/-44.9	+/-44.9	+/-45	+/-45	+/-45
84"	+70/-90	+70/-90	+70/-90	+/-40.8	+/-37.8	+/-37.8						

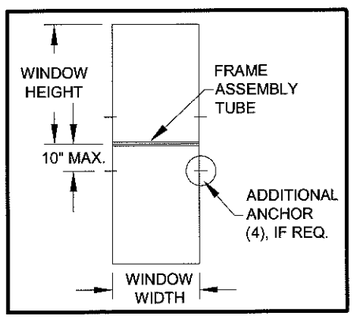

SEE SHEETS 1 & 4 FOR WINDOW ANCHOR LOCATIONS AND QUANTITIES. SEE SHEET 3 FOR ANY ADDITIONAL ANCHORS REQUIRED FOR THE FRAME ASSEMBLY TUBE.

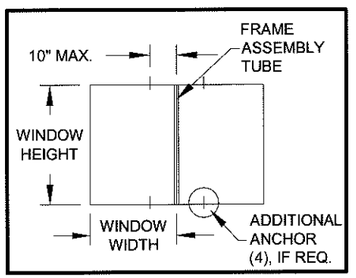

SEE SHEETS 1 & 4 FOR WINDOW ANCHOR LOCATIONS AND QUANTITIES. SEE SHEET 3 FOR ANY ADDITIONAL ANCHORS REQUIRED FOR THE FRAME ASSEMBLY TUBE.

NOTES:
1) SEE SHEET 4 FOR ADDITIONAL SAMPLE CONFIGURATIONS.
2) SEE SHEET 4 FOR SNUBBER REQUIREMENTS.

Revision A:
Date:
Revised By:

Date: 08/08/12
Drawn By: J ROSOWSKI

Description: DESIGN PRESSURES PER GLAZING TYPE
Title: CASEMENT WINDOW DETAILS - NON IMPACT
Series/Model: CA-640

Rev: B
Drawing No. MD-CA640-NI
Sheet: 9 OF 12
Scale: NTS

1070 TECHNOLOGY DRIVE
N. VENICE, FL 34275
P.O. BOX 1529
NOKOMIS, FL 34274
CERT. OF AUTH. #29296

6/8/16

A. LYNN MILLER, P.E.
P.E.# 58705

FOR GLASS TYPES:

9) 7/8" IG: (3/16" An - 1/2" Air - 3/16" An)
10) 7/8" IG: (3/16" T - 1/2" Air - 3/16" T)

PRODUCT REVISED
as complying with the Florida
Building Code
Acceptance No 16-0629.19
Expiration Date April 11, 2018
By Manuel Perez
Miami Dade Product Control

TABLE 20:

Window Height	Design Pressure (psf) for Single Windows, All Anchor Groups						
	Window Width						
	under 23"	25-15/16"	27-3/4"	30"	33-1/2"	35"	37"
under 23"	+90/-150	+90/-150	+90/-145.5	+90/-138.2	+90/-129.8	+90/-126.9	+90/-123.6
25-15/16"	+90/-150	+90/-150	+90/-141.8	+90/-133.1	+90/-123.3	+90/-120	+90/-116.3
38-3/8"	+90/-121.7	+90/-114.1	+90/-110.6	+90/-107.2	+90/-103.8	+90/-102.9	+90/-102.3
48"	+90/-112.1	+90/-103.5	+90/-99.3	+90/-95	+/- 89.9	+/- 88.1	+/- 86.2
50-5/8"	+90/-110.3	+90/-101.6	+90/-97.3	+90/-92.8	+/- 87.4	+/- 85.6	+/- 83.5
60"	+90/-105.4	+90/-96.4	+90/-91.9	+/- 87.1	+/- 81.2	+/- 79	+/- 76.6
63"	+90/-104.3	+90/-95.1	+90/-90.6	+/- 85.7	+/- 79.7	+/- 77.5	+/- 75
72"	+90/-101.4	+90/-92.1	+/- 87.5	+/- 82.5	+/- 76.3	+/- 74	+/- 71.3
76"	+90/-100.4	+90/-91.1	+/- 86.4	+/- 81.4	+/- 75.1	+/- 72.7	+/- 70
84"	+90/-98.7	+/- 89.3	+/- 84.6	+/- 79.5	+/- 72.2		

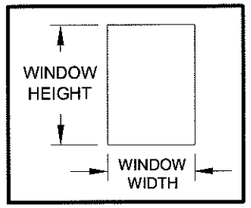

SEE SHEETS 1 & 4 FOR WINDOW ANCHOR LOCATIONS AND QUANTITIES.

TABLE 21:

Window Height	Design Pressure (psf) for Windows Attached to a Vertical Frame Assembly Tube																		
	Window Width																		
	under 23"				25-15/16"			27-3/4"		30"			33-1/2"			35"		37"	
	Anchor Group				Anchor Group			Anchor Group		Anchor Group			Anchor Group			Anchor Group		Anchor Group	
	A	B	C	D	A	B	C & D	B	A, C & D	A	B	C & D	A	B	C & D	B	A, C & D	B	A, C & D
under 23"	+70/-90	+70/-90	+70/-90	+70/-90	+70/-90	+70/-90	+70/-90	+70/-90	+70/-90	+70/-90	+70/-90	+70/-90	+70/-90	+70/-90	+70/-90	+70/-90	+70/-90	+70/-90	+70/-90
25-15/16"	+70/-90	+70/-90	+70/-90	+70/-90	+70/-90	+70/-90	+70/-90	+70/-90	+70/-90	+70/-90	+70/-90	+70/-90	+70/-90	+70/-90	+70/-90	+70/-90	+70/-90	+70/-90	+70/-90
38-3/8"	+70/-90	+70/-71.6	+70/-90	+70/-90	+70/-81	+70/-90	+70/-90	+70/-90	+70/-90	+70/-90	+70/-90	+70/-90	+70/-90	+70/-90	+70/-90	+70/-90	+70/-90	+70/-90	+70/-90
48"	+70/-73.1	+/-57.3	+70/-90	+70/-90	+/-64.8	+70/-90	+70/-90	+70/-90	+70/-90	+70/-90	+70/-87.8	+70/-90	+70/-89.9	+70/-78.6	+70/-89.9	+70/-88.1	+70/-88.1	+70/-86.2	+70/-86.2
50-5/8"	+/-69.3	+/-54.3	+70/-90	+70/-90	+/-61.4	+70/-90	+70/-90	+70/-90	+70/-90	+70/-90	+70/-83.2	+70/-90	+70/-87.4	+70/-74.6	+70/-87.4	+70/-85.6	+70/-85.6	+70/-83.5	+70/-83.5
60"	+/-58.5	+/-45.8	+70/-84.7	+70/-90	+/-51.8	+70/-81.2	+70/-90	+70/-75.9	+70/-90	+70/-87.1	+70/-70.2	+70/-87.1	+70/-80.3	+/-62.9	+70/-81.2	+70/-75.2	+70/-79	+70/-71.2	+70/-76.6
63"	+/-55.7	+/-43.6	+70/-80.7	+70/-89.5	+/-49.3	+70/-77.3	+70/-90	+70/-72.3	+70/-90	+70/-85.3	+/-66.9	+70/-85.7	+70/-76.5	+/-59.9	+70/-79.7	+70/-71.6	+70/-77.5	+/-67.8	+70/-75

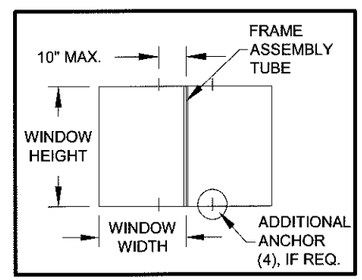

SEE SHEETS 1 & 4 FOR WINDOW ANCHOR LOCATIONS AND QUANTITIES. SEE SHEET 3 FOR ANY ADDITIONAL ANCHORS REQUIRED FOR THE FRAME ASSEMBLY TUBE.

TABLE 22:

Window Height	Design Pressure (psf) for Windows Attached to a Horizontal Frame Assembly Tube								
	Window Width								
	under 23"	25-15/16"	27-3/4"	30"	33-1/2"	35"	37"		
	Anchor Group	Anchor Group	Anchor Group	Anchor Group	Anchor Group	Anchor Group	Anchor Group		
	All	All	All	All	All	All	A	B	C & D
under 23"	+70/-90	+70/-90	+70/-90	+70/-90	+70/-90	+70/-90	+70/-90	+70/-74.3	+70/-90
25-15/16"	+70/-90	+70/-90	+70/-90	+70/-90	+70/-90	+70/-88.8	+70/-84	+70/-90	+70/-90
38-3/8"	+70/-90	+70/-90	+70/-90	+70/-90	+70/-90	+70/-90	+70/-90	+70/-90	+70/-90
48"	+70/-90	+70/-90	+70/-90	+70/-90	+70/-89.9	+70/-88.1	+70/-86.2	+70/-86.2	+70/-86.2
50-5/8"	+70/-90	+70/-90	+70/-90	+70/-90	+70/-87.4	+70/-85.6	+70/-83.5	+70/-83.5	+70/-83.5
60"	+70/-90	+70/-90	+70/-90	+70/-87.1	+70/-81.2	+70/-79	+70/-76.6	+70/-76.6	+70/-76.6
63"	+70/-90	+70/-90	+70/-90	+70/-85.7	+70/-79.7	+70/-77.5	+70/-75	+70/-75	+70/-75
72"	+70/-90	+70/-90	+70/-87.5	+70/-82.5	+70/-76.3	+70/-74	+70/-71.3	+70/-71.3	+70/-71.3
76"	+70/-90	+70/-90	+70/-86.4	+70/-81.4	+70/-75.1	+70/-72.7	+/-70	+/-70	+/-70
84"	+70/-90	+70/-89.3	+70/-84.6	+70/-79.5	+70/-72.2				

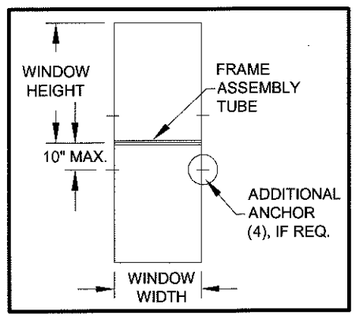

SEE SHEETS 1 & 4 FOR WINDOW ANCHOR LOCATIONS AND QUANTITIES. SEE SHEET 3 FOR ANY ADDITIONAL ANCHORS REQUIRED FOR THE FRAME ASSEMBLY TUBE.

NOTES:
1) SEE SHEET 4 FOR ADDITIONAL SAMPLE CONFIGURATIONS.
2) SEE SHEET 4 FOR SNUBBER REQUIREMENTS.

Revision A:
Date:
Revised By:

Date: 08/08/12
Drawn By: J ROSOWSKI

Description: DESIGN PRESSURES PER GLAZING TYPE
Title: CASEMENT WINDOW DETAILS - NON IMPACT

Scale: NTS
Sheet: 10 OF 12
Drawing No. MD-CA640-NI
Rev. B
Series/Model: CA-640

1070 TECHNOLOGY DRIVE
N. VENICE, FL 34275
P.O. BOX 1529
NOKOMIS, FL 34274
CERT. OF AUTH. #29296

6/8/16

A. LYNN MILLER, P.E.
P.E.# 58705

TABLE 23:

Item	Dwg. #	Description	Material
1	7002	Main Frame Head, Sill & Jamb	6063-T6 Alum.
2	7071	Anchor Plate	6063-T6 Alum.
3	7003	Sash Top, Bottom & Side Rail	6063-T6 Alum.
4	7008	Frame Corner Key	Steel
5	7009	Sash Corner Key	Steel
6	7078	Frame Gasket	Vinyl Foam
7	7072	Sash Corner Gasket	Vinyl Foam
8	7070	Bulb Weatherstrip .187" x .275"	Flex PVC 70
10	7024	Maxim Multi-Point Lock	Steel
11	7026	Lock Support Plate	Steel
12	7014	Multi-Lock Keeper	Steel
13	7013	Tie Bar Guide	Nylon
14	7015	Tie Bar Assembly	Steel or SS
15	7028	Maxim Dyad Operator, WW<=24"	Steel
16	7027	Maxim Dual Arm Operator, WW>24"	Steel
17	7030	Operator Gasket	Vinyl Foam
18	7031	Operator Backing Plate	Steel
19	7051	Operator Spacer Block	Nylon
20	7032	Stud Bracket	Steel
21	7033	Operator Track & Slider (Dual Arm)	Steel
22	7023	Egress Hinge (Heavy Duty), Manuf. by Truth	Steel
23	7050	Egress Hinge/Washable (HD), Manuf. by Truth	Steel
24		Snubber, Anti-blowout Clip	Steel
32	1713	Setting Block 5/32" x 3/16" x 1-1/4"	EPDM
33	1714	Setting Block 5/32" x 7/16" x 1-1/4"	EPDM
34	7037	Bead A	6063-T6 Alum.
35	7036	Bead B	6063-T6 Alum.
36	7042	Bead C	6063-T6 Alum.
37	7059	Bead D	6063-T6 Alum.
38	1224	Vinyl Bulb Wstp (Thick)	Flex PVC 70
39	1225	Vinyl Bulb Wstp (Thin)	Flex PVC 70
50		Dow 899 Silicon Backbedding	
60	7006	Screen Frame	6063-T6 Alum.
61	7040	Screen Corner Key	Polypropolene
62		Screen Cloth	Fiberglass
63	1635	Screen Spline	EM. PVC
64	320	Screen Spring	Stainless Steel
70	134	Add-on Flange	6063-T6 Alum.
71	7004	Frame Assy Tube	6063-T6 Alum.
80		#8-32 x 1/2" Ph. Pn. Mach. Scr TYPE B	Stainless Steel
81	1157	#8 x 1/2" Ph. Pn. SMS	Stainless Steel
82		#8 x 5/8" Fl. Ph. SMS	Stainless Steel
83		#8 x 7/8" Fl. Ph. SMS	Stainless Steel
84		#8 x 1" Fl. Ph. TEK	Stainless Steel
85		#8 x 1" Quad Pn SMS	Stainless Steel
86		#8 X 1-1/2" Quad Pn SMS	Stainless Steel
87		#10 x 1/2" Ph. Pn./ TEK	Stainless Steel
89		#10-24 x 9/16" Ph. Pn. TYPE F	Stainless Steel
90		#12 x 1" Ph. Pn. TEK	Stainless Steel

ASSEMBLY DETAILS

ALL DETAILS SHOWN FROM THE INTERIOR

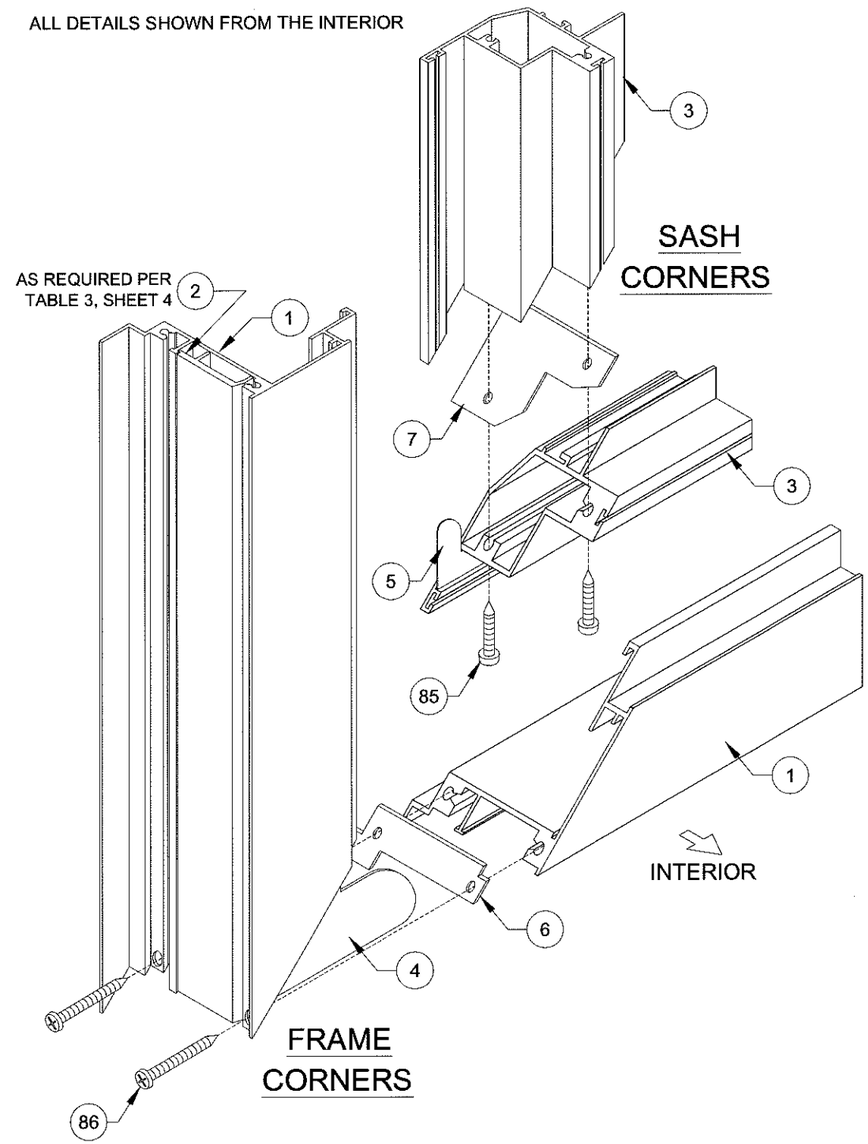

PRODUCT REVISED
as complying with the Florida Building Code
Acceptance No 16-0629.19
Expiration Date April 11, 2018
By Miami Dade Product Control

A. LYNN MILLER, P.E.
P.E.# 58705
6/8/16

PGT®
1070 TECHNOLOGY DRIVE
N. VENICE, FL 34275
P.O. BOX 1529
NOKOMIS, FL 34274
CERT. OF AUTH. #29296

Revised By:	Date:	Revision B:
Revised By:	Date:	Revision A:

Description: BOM AND CORNER VIEW
Drawn By: J ROSOWSKI
Title: CASEMENT WINDOW DETAILS - NON IMPACT
Date: 08/08/12

Series/Model:	Scale:	Sheet:	Drawing No.	Rev:
CA-640	NTS	11 OF 12	MD-CA640-NI	B

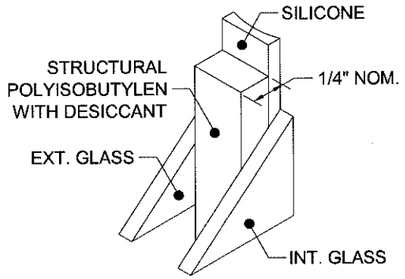

100 KODISPACE 4SG TPS

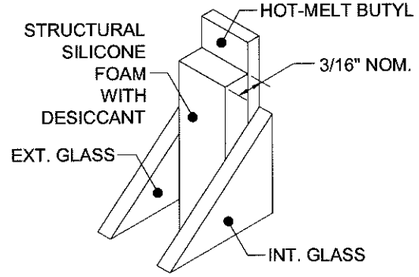

101 SUPER SPACER® NXT™

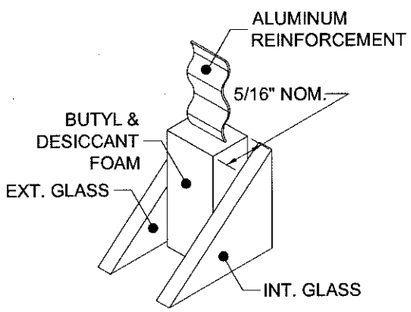

102 DURASEAL® SPACER

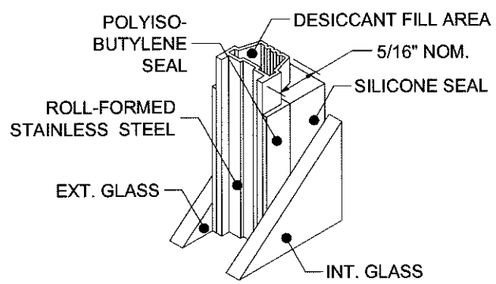

103 XL EDGE™ SPACER

Part #	Description	Material
100	Kommerling 4SG TPS Spacer System	See this Sheet for Materials
101	Quanex Super Spacer nXT with Hot Melt Butyl	
102	Quanex Duraseal Spacer	
103	Cardinal XL Edge Spacer	

REFERENCE TEST REPORTS: FTL-8717, 8968 & 8970

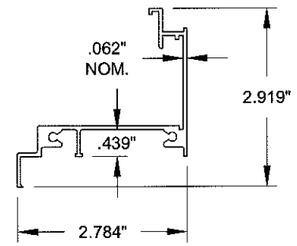

1 FRAME HEAD, SILL & JAMB
#7002, 6063-T6

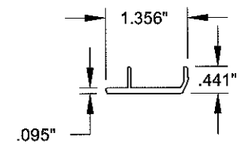

2 ANCHOR PLATE
#7071, 6063-T6

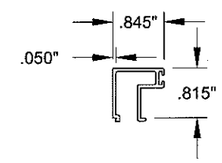

34 BEAD A
#7037, 6063-T6

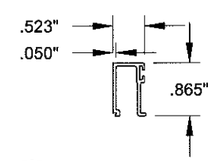

36 BEAD C
#7042, 6063-T6

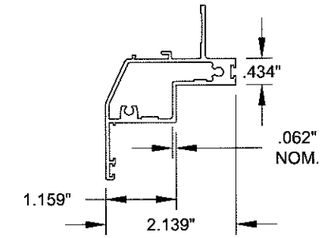

3 SASH TOP, BOTTOM & SIDE
#7003, 6063-T6

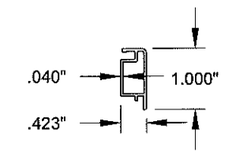

60 FIXED SCREEN FRAME
#7006, 6063-T6

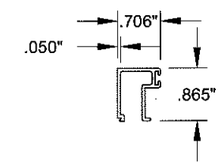

35 BEAD B
#7036, 6063-T6

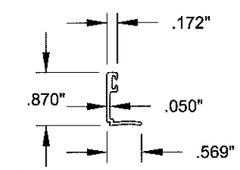

37 BEAD D
#7059, 6063-T6

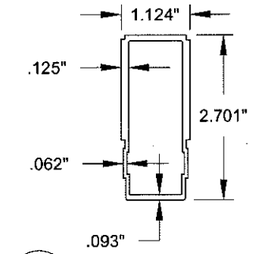

71 FRAME ASSEMBLY TUBE
#7004, 6063-T6

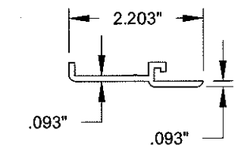

70 ADDON FLANGE
#134, 6063-T6

PRODUCT REVISED
as complying with the Florida Building Code
Acceptance No 16-0629.19
Expiration Date April 11, 2018
By Manuel Perez
Miami Dade Product Control

ANTHONY LYNN MILLER LICENSE No. 58705 STATE OF FLORIDA PROFESSIONAL ENGINEER
6/8/16

A. LYNN MILLER, P.E.
P.E.# 58705

PGT®
1070 TECHNOLOGY DRIVE
N. VENICE, FL 34275
P.O. BOX 1529
NOKOMIS, FL 34274
CERT. OF AUTH. #29296

Revised By:	Date:	Revision B:
JR	05/05/16	ADDED THIS SHEET WITH SPACERS.
Revised By:	Date:	Revision A:

Description: EXTRUSIONS & SPACERS
Drawn By: J ROSOWSKI
Title: CASEMENT WINDOW DETAILS - NON IMPACT
Date: 08/08/12

Series/Model:	Scale:	Sheet:	Drawing No.	Rev:
CA-640	NTS	12 OF 12	MD-CA640-NI	B