MIAMI-DADE COUNTY
PRODUCT CONTROL SECTION
11805 SW 26 Street, Room 208
Miami, Florida 33175-2474
T (786) 315-2590 F (786) 315-2599
www.miamidade.gov/economy

DEPARTMENT OF REGULATORY AND ECONOMIC RESOURCES (RER)
BOARD AND CODE ADMINISTRATION DIVISION

NOTICE OF ACCEPTANCE (NOA)

ENERGI Fenestration Solutions USA, Inc.
30 Royal Group Crescent
Woodbridge (Ontario), Canada L4H 1X9

SCOPE:

This NOA is being issued under the applicable rules and regulations governing the use of construction materials. The documentation submitted has been reviewed and accepted by Miami-Dade County RER-Product Control Section to be used in Miami Dade County and other areas where allowed by the Authority Having Jurisdiction (AHJ).

This NOA shall not be valid after the expiration date stated below. The Miami-Dade County Product Control Section (In Miami Dade County) and/or the AHJ (in areas other than Miami Dade County) reserve the right to have this product or material tested for quality assurance purposes. If this product or material fails to perform in the accepted manner, the manufacturer will incur the expense of such testing and the AHJ may immediately revoke, modify, or suspend the use of such product or material within their jurisdiction. RER reserves the right to revoke this acceptance, if it is determined by Miami-Dade County Product Control Section that this product or material fails to meet the requirements of the applicable building code.

This product is approved as described herein, and has been designed to comply with the Florida Building Code, including the High Velocity Hurricane Zone.

DESCRIPTION: Tan 3040 and lighter shades (Non-White) Rigid PVC Exterior Extrusions for Windows and Doors

Property	Test	Performance
Self-Ignition Temperature	ASTM D1929	737°F > 650°F
Rate of Burning	ASTM D635	Class CC1
Average Smoke Density Rating	ASTM D2843	32.84% < 75%
Xenon Arch Light Exposure (Weathering)	ASTM G155	4500 Hours
Flexural Strength (Difference: Exposed & Unexposed)	ASTM C638	0.68 % < 10%

MISSILE IMPACT RATING: None

LIMITATION: This approval does not include an evaluation of structural performance of this component. Test reports and other required documents shall be submitted to Miami-Dade County Product Control showing that the systems using this PVC Extrusion will resist the loads according to Chapter 16 of the Florida Building Code, in order to issue a specific product approval for the system.

MIAMI-DADE COUNTY
PRODUCT CONTROL SECTION
11805 SW 26 Street, Room 208
Miami, Florida 33175-2474
T (786) 315-2590 F (786) 315-2599
www.miamidade.gov/economy

DEPARTMENT OF REGULATORY AND ECONOMIC RESOURCES (RER)
BOARD AND CODE ADMINISTRATION DIVISION

NOTICE OF ACCEPTANCE (NOA)

ENERGI Fenestration Solutions USA, Inc.
30 Royal Group Crescent
Woodbridge (Ontario), Canada L4H 1X9

LABELING: Each carton containing certified extrusions shall be labeled with the extruder name, city, state and "MDCA". In addition, each extrusion shall be labeled every 4 ft or less on the underside or each window/door assembly shall be labeled with a permanent label identifying the extruder.

RENEWAL of this NOA shall be considered after a renewal application has been filed and there has been no change in the applicable building code negatively affecting the performance of this product.

TERMINATION of this NOA will occur after the expiration date or if there has been a revision or change in the materials, use, and/or manufacture of the product or process. Misuse of this NOA as an endorsement of any product, for sales, advertising or any other purposes shall automatically terminate this NOA. Failure to comply with any section of this NOA shall be cause for termination and removal of NOA.

ADVERTISEMENT: The NOA number preceded by the words Miami-Dade County, Florida, and followed by the expiration date may be displayed in advertising literature. If any portion of the NOA is displayed, then it shall be done in its entirety.

INSPECTION: A copy of this entire NOA shall be provided to the user by the manufacturer or its distributors and shall be available for inspection at the job site at the request of the Building Official.

This NOA **revises NOA # 14-0529.12** and consists of pages 1 and 2, as well as evidence page E-1, E-2 and E-3.

The submitted documentation was reviewed by **Carlos M. Utrera, P.E.**

09/07/2016

MIAMI-DADE COUNTY APPROVED

NOTICE OF ACCEPTANCE: EVIDENCE PAGE

A. DRAWINGS

1. See pages E-2 and E-3.

B. TESTS *"Submitted under NOA # 14-0529.12"*

	Report No.	Test Standard	Date	Signature
1.	HETI-15-F301	ASTM D1929	08/21/2015	Rafael E. Droz-Seda, P.E.
2.	HETI-15-F301	ASTM D635	08/21/2015	Rafael E. Droz-Seda, P.E.
3.	HETI-15-F301	ASTM D2843	08/21/2015	Rafael E. Droz-Seda, P.E.
4.	HETI-15-A5002	ASTM G155	08/18/2015	Rafael E. Droz-Seda, P.E.
5.	HETI-15-U504	ASTM D638	08/18/2015	Rafael E. Droz-Seda, P.E.
6.	HETI-15-U505	ASTM D638	08/18/2015	Rafael E. Droz-Seda, P.E.

C. CALCULATION

1. None

D. QUALITY ASSURANCE

1. Miami-Dade Department of Regulatory and Economic Resources (RER)

E. MATERIAL CERTIFICATION

1. Notice of Acceptance No. **16-0712.05** issued to ENERGI Fenestration Solutions USA, Inc. for its **'Performance Core Rigid PVC Exterior Extrusions'**, approved on 09/15/2016 and expiring on 04/16/2020.
2. Notice of Acceptance No. **16-0712.04** issued to ENERGI Fenestration Solutions USA, Inc. for its **'Bronze and Lighter Shades of Cap Coated Rigid PVC Exterior Extrusions'**, approved on 09/15/2016 and expiring on 04/16/2020.

F. STATEMENTS

1. Letter from ENERGI Fenestration Solutions USA, Inc. stating that they have legally purchased all assets and requesting that a new NOA be issued under their name, signed by Steve Chandler and dated 05/25/16.
2. Letter from Axiall Corporation stating that they have sold all assets to Parent North American Profiles Canada, LTD. dba ENERGI Fenestration Solutions USA, Inc. signed by Gary Denning and dated 05/24/16.
3. Certificate of amendment dated 04/08/16.

"Submitted under NOA # 14-0529.12"

4. Statement letter of code conformance to the 5th edition (2014) FBC and of no financial interest issued by ENGCO Inc., dated 10/06/2015, signed and sealed by Pedro De Figueiredo, P.E.

09/07/2016

Carlos M. Utrera, P.E.
Product Control Examiner
NOA No 16-0712.02
Expiration Date: February 4, 2021
Approval Date: September 15, 2016

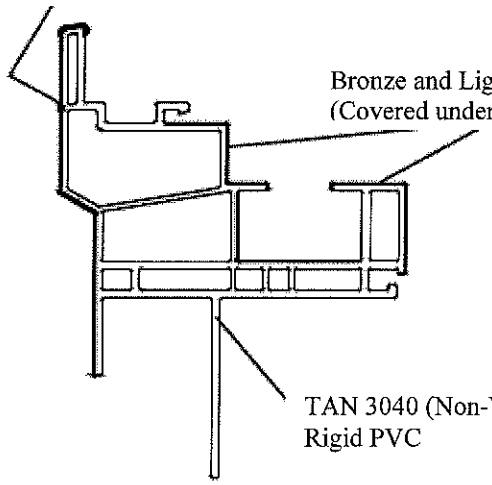

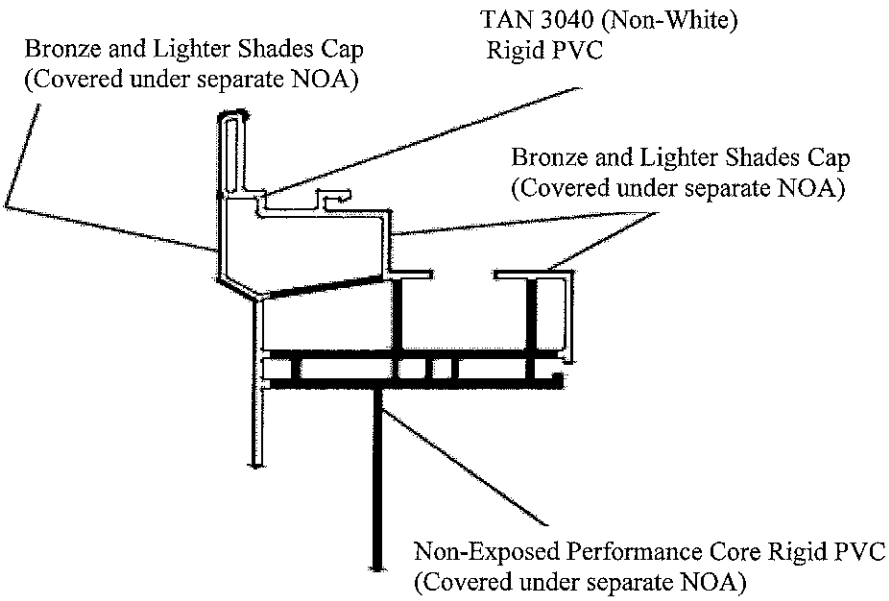

Sample Profiles

Note: By complex controls, multiple compounds are simultaneously extruded and combined to create a wide variety of custom engineered profiles.

09/07/2016

Carlos M. Utrera, P.E.
Product Control Examiner
NOA No 16-0712.02
Expiration Date: February 4, 2021
Approval Date: September 15, 2016

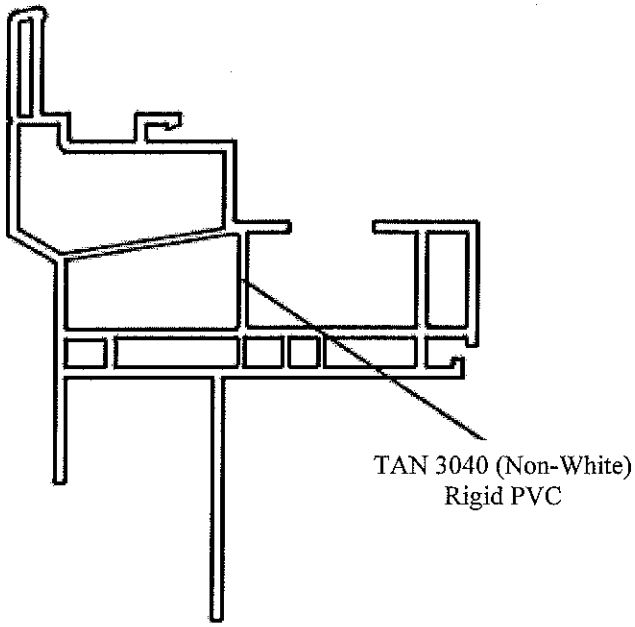

Sample Profile

END OF THIS ACCEPTANCE

09/07/2016

Carlos M. Utrera, P.E.
Product Control Examiner
NOA No 16-0712.02
Expiration Date: February 4, 2021
Approval Date: September 15, 2016