MIAMI-DADE COUNTY
DEPARTMENT OF REGULATORY AND ECONOMIC RESOURCES (RER)
BOARD AND CODE ADMINISTRATION DIVISION

MIAMI-DADE COUNTY
PRODUCT CONTROL SECTION
11805 SW 26 Street, Room 208
T (786) 315-2590 F (786) 315-2599
www.miamidade.gov/economy

NOTICE OF ACCEPTANCE (NOA)

PGT Industries, Inc.
1070 Technology Drive
North Venice, FL 34275

SCOPE:

This NOA is being issued under the applicable rules and regulations governing the use of construction materials. The documentation submitted has been reviewed and accepted by Miami-Dade County RER - Product Control Section to be used in Miami Dade County and other areas where allowed by the Authority Having Jurisdiction (AHJ).

This NOA shall not be valid after the expiration date stated below. The Miami-Dade County Product Control Section (In Miami Dade County) and/or the AHJ (in areas other than Miami Dade County) reserve the right to have this product or material tested for quality assurance purposes. If this product or material fails to perform in the accepted manner, the manufacturer will incur the expense of such testing and the AHJ may immediately revoke, modify, or suspend the use of such product or material within their jurisdiction. RER reserves the right to revoke this acceptance, if it is determined by Miami-Dade County Product Control Section that this product or material fails to meet the requirements of the applicable building code.

This product is approved as described herein, and has been designed to comply with the Florida Building Code, including the High Velocity Hurricane Zone.

DESCRIPTION: Series "5400" PVC Single Hung Window – N.I.

APPROVAL DOCUMENT: Drawing No. **MD-SH5400-01** titled "Single Hung Window Installation - NI", sheets 1 through 12 of 12, dated 05/15/15, with revision A dated 05/05/16, prepared by manufacturer, signed and sealed by Anthony Lynn Miller, P.E., bearing the Miami-Dade County Product Control Revision stamp with the Notice of Acceptance number and expiration date by the Miami-Dade County Product Control Section.

MISSILE IMPACT RATING: None

LABELING: Each unit shall bear a permanent label with the manufacturer's name or logo, city, state, model/series, and following statement: "Miami-Dade County Product Control Approved", unless otherwise noted herein.

RENEWAL of this NOA shall be considered after a renewal application has been filed and there has been no change in the applicable building code negatively affecting the performance of this product.

TERMINATION of this NOA will occur after the expiration date or if there has been a revision or change in the materials, use, and/or manufacture of the product or process. Misuse of this NOA as an endorsement of any product, for sales, advertising or any other purposes shall automatically terminate this NOA. Failure to comply with any section of this NOA shall be cause for termination and removal of NOA.

ADVERTISEMENT: The NOA number preceded by the words Miami-Dade County, Florida, and followed by the expiration date may be displayed in advertising literature. If any portion of the NOA is displayed, then it shall be done in its entirety.

INSPECTION: A copy of this entire NOA shall be provided to the user by the manufacturer or its distributors and shall be available for inspection at the job site at the request of the Building Official.

This NOA **revises NOA# 15-0519.06** and consists of this page 1 and evidence pages E-1 and E-2, as well as approval document mentioned above.

The submitted documentation was reviewed by **Manuel Perez, P.E.**

MIAMI-DADE COUNTY APPROVED

8/12/16

NOA No. 16-0714.04
Expiration Date: July 30, 2020
Approval Date: August 18, 2016

PGT Industries, Inc.

NOTICE OF ACCEPTANCE: EVIDENCE SUBMITTED

A. DRAWINGS

1. Manufacturer's die drawings and sections.
   (Submitted under previous NOA No. 15-0519.06)
2. Drawing No. **MD-SH5400-01** titled "Single Hung Window Installation - NI", sheets 1 through 12 of 12, dated 05/15/15, with revision A dated 05/05/16, prepared by manufacturer, signed and sealed by Anthony Lynn Miller, P.E.

B. TESTS

1. Test reports on: 1) Uniform Static Air Pressure Test, Loading per FBC, TAS 202-94
   2) Large Missile Impact Test per FBC, TAS 201-94
   3) Cyclic Wind Pressure Loading per FBC, TAS 203-94
   along with marked-up drawings and installation diagram of a PVC sliding glass door, a PVC fixed window and an aluminum sliding glass door, using: Kodispace 4SG TPS spacer system, Duraseal® spacer system, Super Spacer® NXT™ spacer system and XL Edge™ spacer system at insulated glass, prepared by Fenestration Testing Laboratory, Inc., Test Reports No. **FTL-8717, FTL-8968** and **FTL-8970**, dated 11/16/15, 06/07/16 and 06/02/16 respectively, all signed and sealed by Idalmis Ortega, P.E.
2. Test reports on: 1) Air Infiltration Test, per FBC, TAS 202-94
   2) Uniform Static Air Pressure Test, Loading per FBC TAS 202-94
   3) Water Resistance Test, per FBC, TAS 202-94
   4) Forced Entry Test, per FBC 2411.3.2.1, and TAS 202-94
   5) Large Missile Impact Test per FBC, TAS 201-94
   6) Cyclic Wind Pressure Loading per FBC, TAS 203-94
   along with marked-up drawings and installation diagram of a series 5500 PVC single hung window, prepared by Fenestration Testing Laboratory, Inc., Test Report No. **FTL-7964**, dated 11/15/14, signed and sealed by Idalmis Ortega, P.E.
   (Submitted under previous NOA No. 15-0519.06)

C. CALCULATIONS

1. Anchor verification calculations and structural analysis, complying with **FBC-5th Edition (2014)**, dated 05/15/15, prepared by manufacturer, signed and sealed by Anthony Lynn Miller, P.E.
   (Submitted under previous NOA No. 15-0519.06)
2. Glazing complies with **ASTM E1300-09**

D. QUALITY ASSURANCE

1. Miami-Dade Department of Regulatory and Economic Resources (RER).

Manuel Perez

Manuel Perez, P.E.
Product Control Examiner
NOA No. 16-0714.04
Expiration Date: July 30, 2020
Approval Date: August 18, 2016

NOTICE OF ACCEPTANCE: EVIDENCE SUBMITTED

E. MATERIAL CERTIFICATIONS (CONTINUED)

1. Notice of Acceptance No. **12-1120.02** issued to Royal Window and Door Profiles, Plant 13 for their "**White Rigid PVC Exterior Extrusions for Windows and Doors**" dated 02/28/13, expiring on 02/28/18.
2. Notice of Acceptance No. **14-0529.13** issued to Royal Window and Door Profiles, Plant 13 for their "**Bronze and Lighter Shades of Cap Coated Rigid PVC Exterior Extrusions for Windows and Doors**" dated 04/16/15, expiring on 04/16/20.
3. Notice of Acceptance No. **14-0529.14** issued to Royal Window and Door Profiles, Plant 13 for their "**Performance Core Rigid PVC Exterior Extrusions for Windows and Doors**" dated 04/16/15, expiring on 04/16/20.

F. STATEMENTS

1. Statement letter of conformance, complying with **FBC -2010** and **FBC-5th Edition (2014)**, dated May 15, 2015, issued by manufacturer, signed and sealed by Anthony Lynn Miller, P.E.
   (Submitted under previous NOA No. 15-0519.06)
2. Statement letter of no financial interest, dated May 15, 2015, issued by manufacturer, signed and sealed by Anthony Lynn Miller, P.E.
   (Submitted under previous NOA No. 15-0519.06)
3. Proposal issued by Product Control, dated 6/26/14 and revised on 8/19/14, signed by Jaime Gascon, P.E. Supervisor, Product Control Section.
   (Submitted under previous NOA No. 15-0519.06)
4. Proposal No. **16-0125** issued by the Product Control Section, dated March 09, 2016, signed by Ishaq Chanda, P.E.

G. OTHERS

1. Notice of Acceptance No. **15-0519.06**, issued to PGT Industries for their Series "5400" PVC Single Hung Window - N.I." approved on 07/30/15 and expiring on 07/30/20.

Manuel Perez, P.E.
Product Control Examiner
NOA No. 16-0714.04
Expiration Date: July 30, 2020
Approval Date: August 18, 2016

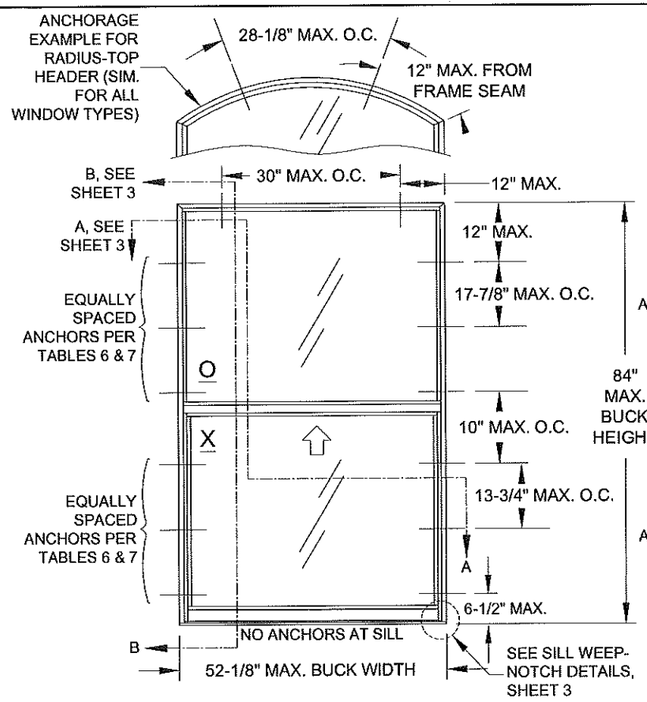

ELEVATION FOR TYP. EQUAL LEG FRAME
SHOWN WITH EQUAL-LITE CONFIGURATION

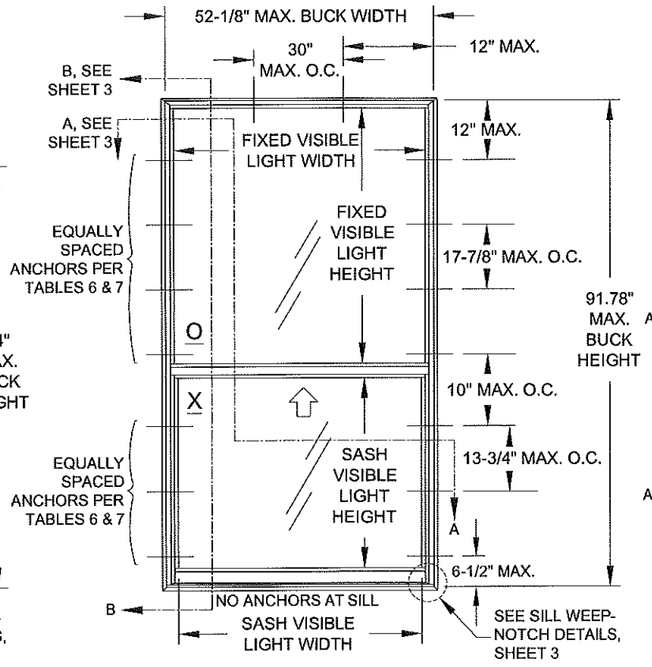

ELEVATION FOR TYP. FLANGE FRAME
SHOWN WITH ORIEL/PROVIEW CONFIGURATION

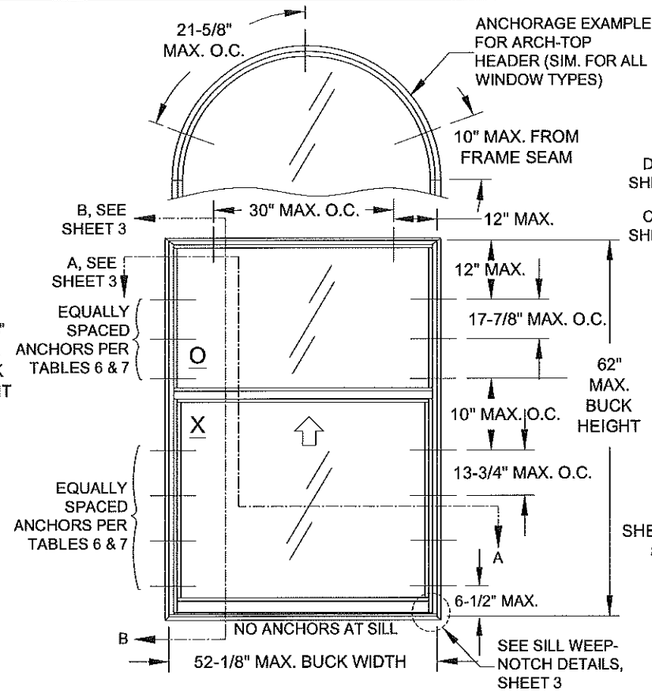

ELEVATION FOR TYP. FLANGE FRAME
SHOWN WITH STANDARD COTTAGE CONFIGURATION
FOR CUSTOM COTTAGE CONFIGURATION UP TO
75" HEIGHT SEE TABLES 6 & 7

DESIGN PRESSURE RATING	IMPACT RATING
VARIES PER REINFORCEMENT LEVEL, SEE SHEETS 6-7	NOT RATED FOR IMPACT RESISTANCE

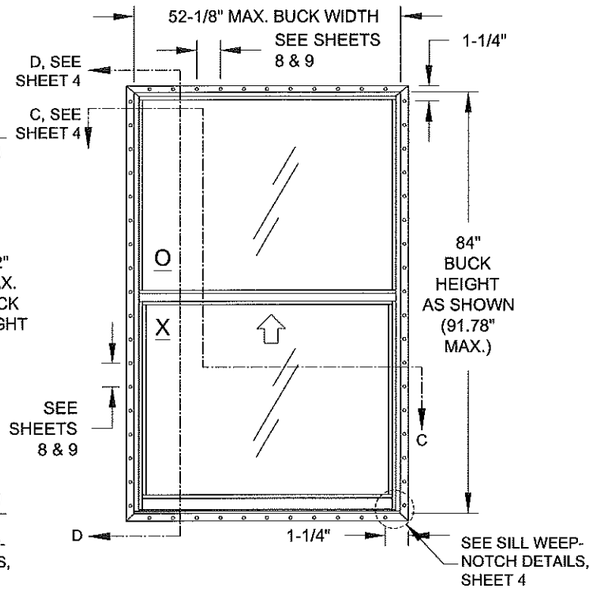

ELEVATION FOR TYP. FIN OR J-CHANNEL FRAME
SHOWN WITH EQUAL-LITE CONFIGURATION
ANCHORED THROUGH THE NAIL-FIN
(SIMILAR ANCHOR DIMENSIONS FOR OTHER CONFIGURATIONS)

GENERAL NOTES: SERIES 5400 NON-IMPACT RESISTANT SINGLE HUNG WINDOW

1) THIS PRODUCT HAS BEEN DESIGNED & TESTED TO COMPLY WITH THE REQUIREMENTS OF THE FLORIDA BUILDING CODE, INCLUDING THE HIGH VELOCITY HURRICANE ZONE (HVHZ).
2) SHUTTERS ARE REQUIRED WHEN USED IN WIND-BORNE DEBRIS REGIONS.
3) FOR MASONRY APPLICATIONS IN MIAMI-DADE COUNTY, USE ONLY MIAMI-DADE COUNTY APPROVED MASONRY ANCHORS. MATERIALS USED FOR ANCHOR EVALUATIONS WERE SOUTHERN PINE, ASTM C90 CONCRETE MASONRY UNITS AND CONCRETE WITH MIN. KSI PER ANCHOR TYPE.
4) ALL WOOD BUCKS LESS THAN 1-1/2" THICK ARE TO BE CONSIDERED 1X INSTALLATIONS. 1X WOOD BUCKS ARE OPTIONAL IF UNIT IS INSTALLED DIRECTLY TO SUBSTRATE. WOOD BUCKS DEPICTED AS 2X ARE 1-1/2" THICK OR GREATER. 1X AND 2X BUCKS (WHEN USED) SHALL BE DESIGNED AND SECURED TO PROPERLY TRANSFER LOADS TO THE STRUCTURE. WOOD BUCK DESIGN AND INSTALLATION IS THE RESPONSIBILITY OF THE ENGINEER, (EOR) OR ARCHITECT OF RECORD, (AOR).
5) ANCHOR EMBEDMENT TO BASE MATERIAL SHALL BE BEYOND WALL DRESSING OR STUCCO. USE ANCHORS OF SUFFICIENT LENGTH TO ACHIEVE REQUIRED MIN. EMBEDMENT. INSTALLATION ANCHORS SHOULD BE SEALED. OVERALL SEALING/FLASHING STRATEGY FOR WATER RESISTANCE OF INSTALLATION SHALL BE DONE BY OTHERS AND IS BEYOND THE SCOPE OF THESE INSTRUCTIONS.
6) 1/4" MAX. SHIMS ARE REQUIRED AT EACH ANCHOR LOCATION WHERE THE PRODUCT IS NOT FLUSH TO THE SUBSTRATE. USE SHIMS CAPABLE OF TRANSFERRING APPLIED LOADS.
7) DESIGN PRESSURES:
   A. NEGATIVE DESIGN LOADS BASED ON STRUCTURAL TESTING AND GLASS PER ASTM E1300.
   B. POSITIVE DESIGN LOADS BASED ON WATER TEST PRESSURE, STRUCTURAL TESTING AND GLASS PER ASTM E1300.
8) THE ANCHORAGE METHODS SHOWN HAVE BEEN DESIGNED TO RESIST THE WINDLOADS CORRESPONDING TO THE REQUIRED DESIGN PRESSURE. THE 33-1/3% STRESS INCREASE HAS NOT BEEN USED IN THE DESIGN OF THIS PRODUCT. THE 1.6 LOAD DURATION FACTOR WAS USED FOR THE EVALUATION OF ANCHORS INTO WOOD. ANCHORS THAT COME INTO CONTACT WITH OTHER DISSIMILAR MATERIALS SHALL MEET THE REQUIREMENTS OF THE FLORIDA BUILDING CODE FOR CORROSION RESISTANCE.
9) METAL SUBSTRATE TO MEET MIN. STRENGTH AND THICKNESS REQUIREMENTS PER CURRENT FLORIDA BUILDING CODE AND TO BE REVIEWED BY THE AUTHORITY HAVING JURISDICTION.
10) REFERENCES: TEST REPORTS FTL-7964; ELCO ULTRACON NOA; ELCO CRETEFLEX NOA; ELCO AGGRE-GATOR NOA; ROYAL WINDOW AND DOOR PROFILES, LTD WHITE & BRONZE/LIGHTER SHADES OF CAP COATED PVC EXTRUSION NOA'S; NATIONAL DESIGN SPECIFICATION FOR WOOD CONSTRUCTION, ANSI/AF&PA NDS & ALUMINUM DESIGN MANUAL
11) APPLICABLE EGRESS REQUIREMENTS TO BE REVIEWED BY BUILDING OFFICIAL.

USER INSTRUCTIONS:

1) DETERMINE THE SITE SPECIFIC, WINDOW OPENING'S DESIGN PRESSURE REQUIREMENT FROM ASCE 7.
2) DETERMINE THE MOST SUITABLE ANCHOR GROUP FROM TABLES 2 OR 3 ACCORDING TO THE INSTALLATION CONDITIONS.
3) KNOWING YOUR GLAZING OPTION (TABLE 1), WINDOW CONFIGURATION AND SIZE, DETERMINE YOUR WINDOW'S DESIGN PRESSURE FROM TABLES 4 OR 5. IT MUST EQUAL OR EXCEED THE DESIGN PRESSURE REQUIREMENT FOR THE WINDOW OPENING OBTAINED IN STEP 1.
4) DETERMINE THE ANCHOR QUANTITY FROM TABLES 6 OR 7. VERIFY THE ANCHOR/SUBSTRATE WILL MEET REQUIREMENTS FOR YOUR OPENING'S CONDITION FROM TABLES 2 OR 3, AND THAT ALL MIN. REQUIREMENTS FROM THIS SHEET-SET ARE MET.
5) INSTALL AS PER SHEET 3 FOR THRU-FRAME INSTALLATION OR SHEET 4 FOR INTEGRAL FIN INSTALLATION.

NOTE:DESIGN PRESSURE RATING DETERMINATION IS THE SAME PROCESS FOR ALL FRAME TYPES (J-CHANNEL, FLANGE, INTEGRAL FIN OR EQUAL LEG/BOX).

GENERAL NOTES.....1
ELEVATIONS.....1
FRAME, GLASS & ANCHOR OPTIONS.....2
INSTALLATION, FLANGE & EQUAL LEG/BOX.....3
INSTALLATION, INTEGRAL FIN & J-CHANNEL.....4
GLAZING DETAILS.....5
DESIGN PRESSURES.....6, 7
ANCHOR QUANTITIES.....8, 9
EXTRUSION PROFILES.....10
ASSEMBLY & PARTS LIST.....11, 12

STANDARDS USED:
- 2014 FLORIDA BUILDING CODE (FBC), 5TH EDITION
- ASTM E1300-09
- ANSI/AF&PA NDS-2012 FOR WOOD CONSTRUCTION
- ALUMINUM DESIGN MANUAL, ADM-2010
- AISI-S100-07/S2-2010

PRODUCT REVISED
as complying with the Florida Building Code
Acceptance No 16-0714.04
Expiration Date July 30, 2020
By Manuel Perez
Miami-Dade Product Control

ANTHONY LYNN MILLER LICENSE No. 58705 STATE OF FLORIDA PROFESSIONAL ENGINEER
6/14/16
A. LYNN MILLER, P.E.
P.E.# 58705

PGT®
1070 TECHNOLOGY DRIVE
N. VENICE, FL 34275
(941)-480-1600
CERT. OF AUTH. #29296

Revised By:	Date:	Revision:
JR	05/05/16	A) ADDED SPACERS TO SHEET 11.

Description:	Drawn By:
GENERAL NOTES & ELEVATION	J ROSOWSKI

Title:	Date:
SINGLE HUNG WINDOW INSTALLATION - NI	05/15/15

Series/Model:	Scale:	Sheet:	Drawing No.	Rev:
SH-5400	NTS	1 OF 12	MD-SH5400-01	A

TABLE 1: ALLOWABLE GLASS TYPES

Glass Type	Description (Listed from Exterior to Interior)	Design Pressure	
		Table #	Sheet #
1	3/4" I.G.: 1/8" A Exterior Cap + 1/2" Air Space + 1/8" A Exterior Cap	4	6
2	3/4" I.G.: 1/8" T Exterior Cap + 1/2" Air Space + 1/8" T Exterior Cap	4, 5	6, 7
3	3/4" I.G.: 3/16" A Exterior Cap + 3/8" Air Space + 3/16" A Exterior Cap	4, 5	6, 7
4	3/4" I.G.: 3/16" T Exterior Cap + 3/8" Air Space + 3/16" T Exterior Cap	4, 5	6, 7

GLAZING NOTES:
"A" = ANNEALED
"T" = TEMPERED

TABLE 2: ALLOWABLE ANCHORS THROUGH THE FRAME

Group	Anchor	Substrate	Min. Edge Distance	Min. Embedment*
A	#10 SMS (steel, 18-8 S.S. or 410 S.S.)	P.T. Southern Pine (SG=0.55)	7/16"	1-3/8"
		Steel, A36*	3/8"	0.050"
		Steel Stud, A653 Gr. 33*	3/8"	0.0451" (18 Ga.)
		Aluminum, 6063-T5*	3/8"	0.050"
	3/16" steel Ultracon	P.T. Southern Pine (SG=0.55)	7/16"	1-3/8"
		Concrete (min. 2.85 ksi)	1"	1-3/8"
		Ungrouted CMU, (ASTM C-90)	2-1/2"	1-1/4"
B	#12 SMS (steel, 18-8 S.S. or 410 S.S.)	P.T. Southern Pine (SG=0.55)	9/16"	1-3/8"
		Steel, A36*	3/8"	0.050"
		Steel Stud, A653 Gr. 33*	3/8"	0.0451" (18 Ga.)
		Aluminum, 6063-T5*	3/8"	0.063"
C	1/4" steel Ultracon	Concrete (min. 2.85 ksi)	1"	1-3/4"
		Ungrouted CMU, (ASTM C-90)	2-1/2"	1-1/4"
	1/4" steel Creteflex	Concrete (min. 3.35 ksi)	1"	1-3/4"
D	1/4" steel Ultracon	Concrete (min. 2.85 ksi)	2-1/2"	1-3/4"
	1/4" steel Ultracon	P.T. Southern Pine (SG=0.55)	1"	1-3/8"
	1/4" steel Creteflex	Concrete (min. 3.35 ksi)	2-1/2"	1-3/4"
	1/4" steel Creteflex	Ungrouted CMU, (ASTM C-90)	2-1/2"	1-1/4"
		P.T. Southern Pine (SG=0.55)	1"	1-3/8"
	1/4" steel Aggre-Gator	Concrete (min. 3.275 ksi)	1-1/2"	1-3/8"
	1/4" steel Aggre-Gator	P.T. Southern Pine (SG=0.55)	1"	1-3/8"
		Grouted CMU, (ASTM C-90)	2"	2"

* MIN. OF 3 THREADS BEYOND THE METAL SUBSTRATE. FOR STEEL STUDS, MIN. Fu=45 KSI & MIN. Fy=33 KSI.

"UNGROUTED CMU" VALUES MAY BE USED FOR GROUTED CMU APPLICATIONS.

TABLE 3: ALLOWABLE ANCHORS THROUGH THE INTEGRAL FIN

Group	Anchor	Substrate	Min. Edge Distance	Min. Embedment*
E	2-1/2" x .131" Common Nail	P.T. Southern Pine (SG=.55)	3/8"	2-7/16"
F	2-1/2" Ring-shank Roofing Nail	P.T. Southern Pine (SG=.55)	3/8"	2-7/16"
	#10 Trusshead SMS (steel, 18-8 S.S. or 410 S.S.)	P.T. Southern Pine (SG=.55)	1/2"	1-3/8"
		Aluminum, 6063-T5*	3/8"	0.050"
		Steel Stud, Gr. 33*	3/8"	0.0451" (18 Ga.)
		Steel, A36*	3/8"	0.050"
	#12 SMS (steel, 18-8 S.S. or 410 S.S.)	P.T. Southern Pine (SG=.55)	9/16"	1-3/8"
		Aluminum, 6063-T5*	3/8"	0.063"
		Steel Stud, Gr. 33*	3/8"	0.050"
		Steel, A36*	3/8"	0.050"

* MIN. OF 3 THREADS BEYOND THE METAL SUBSTRATE. FOR STEEL STUDS, MIN. Fu=45 KSI & MIN. Fy=33 KSI.

Frame Types (see Fig B)	Glass Options (see Table 1)	Frame Configs. (see Fig A)	Frame Shapes (see Fig C)	Installation Options that may be used	
Flange (#2)	1 - 4	Equal-Lite, Oriel/Proview & Cottage	Square/Rect., Arch-Top & Radius-Top	Through the frame of the window.....	....into 2X Wood Frame/Buckstrip - sheet 3, option 1
					....into Concrete/CMU - sheet 3, option 2
					....through 1X Buckstrip into Concrete/CMU - sheet 3, option 3
					....into Metal - sheet 3, option 4
Box / Equal-Leg (#4)	1 - 4	Equal-Lite, Oriel/Proview & Cottage	Square/Rect., Arch-Top & Radius-Top	Through the frame of the window.....	....into 2X Wood Frame/Buckstrip - sheet 3, option 1
					....into Concrete/CMU - sheet 3, option 2
					....through 1X Buckstrip into Concrete/CMU - sheet 3, option 3
					....into Metal - sheet 3, option 4
J-Channel (#1)	1 - 4	Equal-Lite, Oriel/Proview & Cottage	Square/Rect., Arch-Top & Radius-Top	Through the integral fin.....	....into 2X Wood Frame/Buckstrip - sheet 4, option 5
					....into Metal - sheet 4, option 7
				Through the frame of the window.....	....into 2X Wood Frame/Buckstrip - sheet 4, option 6
					....into Metal - sheet 4, option 8
Integral Fin (#3)	1 - 4	Equal-Lite, Oriel/Proview & Cottage	Square/Rect., Arch-Top & Radius-Top	Through the integral fin.....	....into 2X Wood Frame/Buckstrip - sheet 4, option 5
					....into Metal - sheet 4, option 7
				Through the frame of the window.....	....into 2X Wood Frame/Buckstrip - sheet 4, option 6
					....into Metal - sheet 4, option 8

FIGURE A: FRAME CONFIGURATIONS

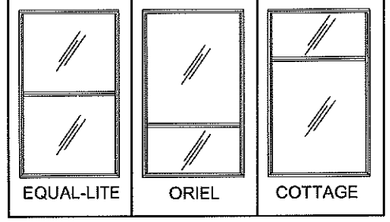

FIGURE B: FRAME TYPES

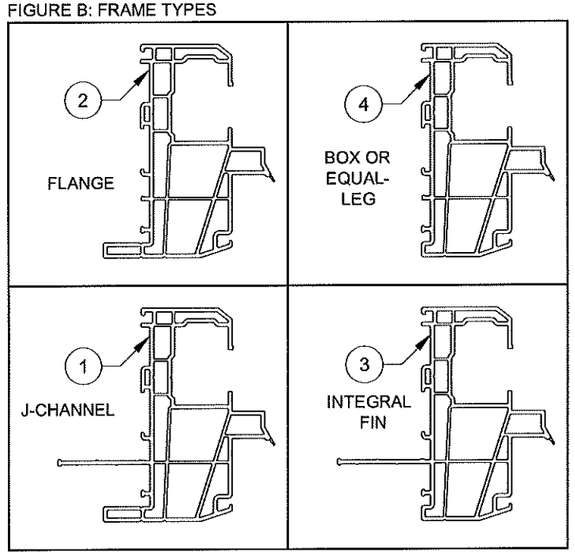

FIGURE C: FRAME SHAPES

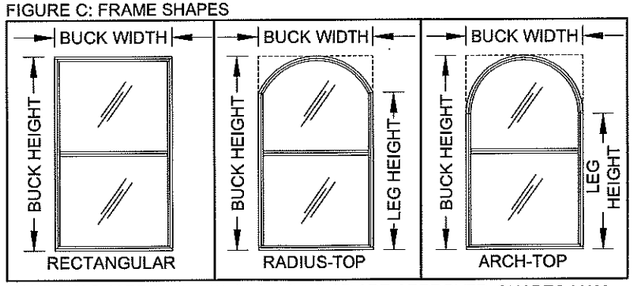

WINDOW SHAPES AS ABOVE OR SIMILAR ARE APPROVED. SHAPES MAY BE USED BY INSCRIBING THE SHAPE IN A BLOCK AND OBTAINING DESIGN PRESSURES AND ANCHORAGE FOR THAT BLOCK SIZE FROM THE TABLES ON SHEETS 6-9.

STATE OF FLORIDA
A. LYNN MILLER
No. 58705
6/14/16

A. LYNN MILLER, P.E.
P.E.# 58705

PGT®

1070 TECHNOLOGY DRIVE
N. VENICE, FL 34275
(941)-480-1600

CERT. OF AUTH. #29296

PRODUCT REVISED
as complying with the Florida
Building Code
Acceptance No 16-0714.04
Expiration Date July 30, 2020
By Manuel Perez
Miami Dade Product Control

Revised By:	Date:	Revision:
Revised By:	Date:	Revision:

Description: GLASS/ANCHORS/FRAME OPTIONS
Drawn By: J ROSOWSKI
Title: SINGLE HUNG WINDOW INSTALLATION - NI
Date: 05/15/15
Series/Model: SH-5400
Scale: NTS
Sheet: 2 OF 12
Drawing No. MD-SH5400-01
Rev: A

INSTALLATION DETAILS FOR FLANGE & EQUAL-LEG/BOX FRAMES

INSTALLATION OPTION 1

ANCHORED THROUGH FRAME INTO 2X WOOD FRAME OR BUCKSTRIP. SEE NOTE 2, THIS SHEET.

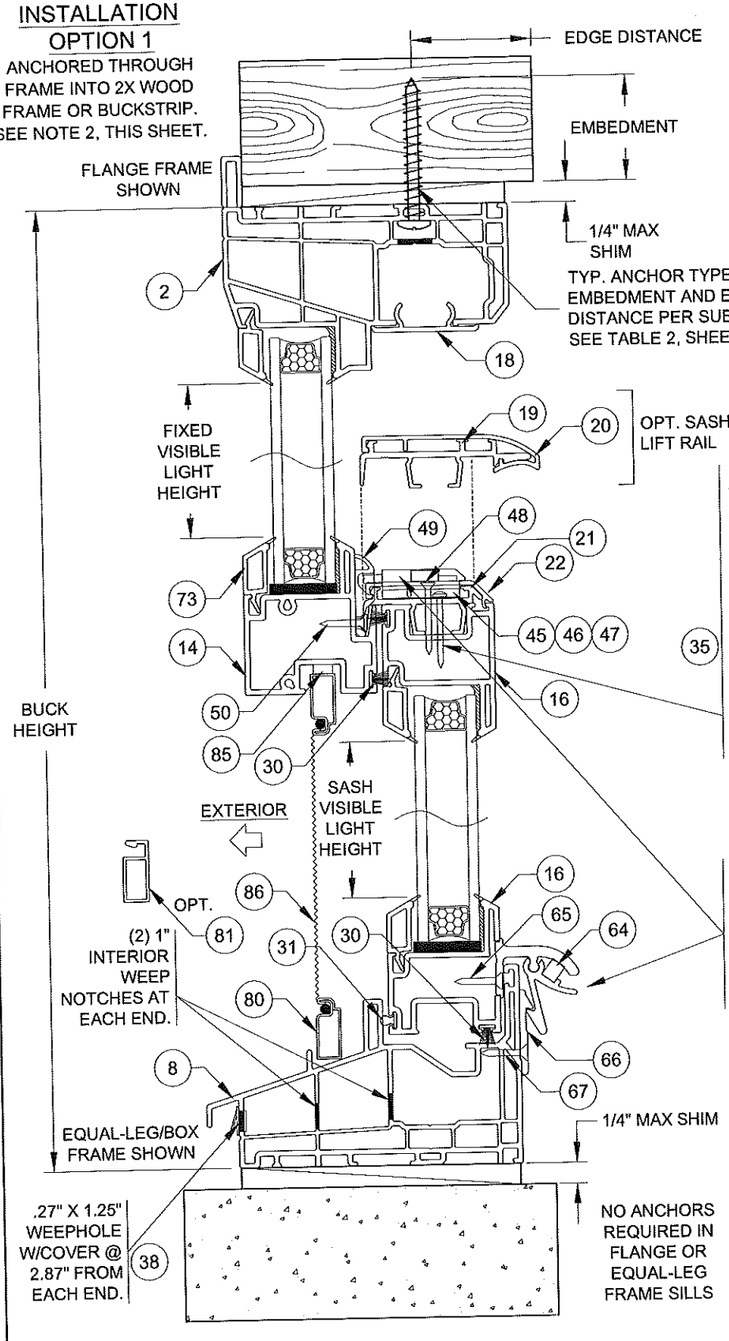

FOR ALL WINDOWS: 1 ANCHOR @ 3.55" FROM END AND AT CENTER.
FOR WINDOWS OVER 36" WIDE: ADD ADDITIONAL SCREWS @16-3/8" FROM END.
FOR WINDOWS WITH BOTTOM LOCKS: ADD ADDITIONAL SCREWS @ 8-3/8" FROM END.

USE EITHER LATCH OR BOTTOM LOCK. TESTED UNIT LOCATION: 6-5/8" FROM SASH END.

VERTICAL SECTION B-B

INSTALLATION OPTION 2

ANCHORED THROUGH FRAME DIRECTLY INTO CONCRETE/CMU.

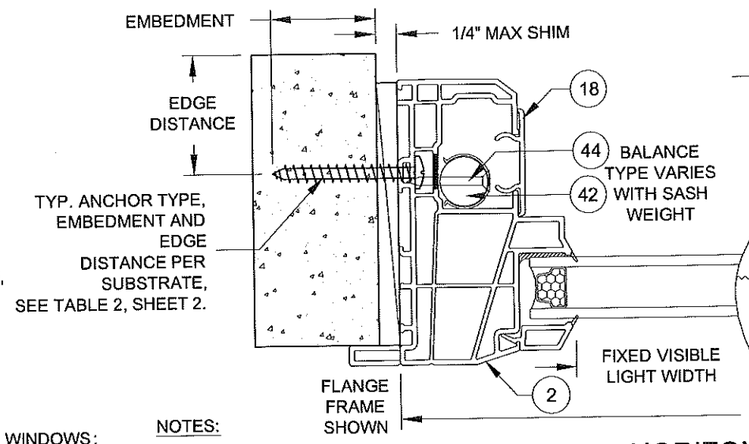

INSTALLATION OPTION 3

ANCHORED THROUGH FRAME AND 1X BUCKSTRIP INTO CONCRETE/CMU. SEE NOTE 2, THIS SHEET.

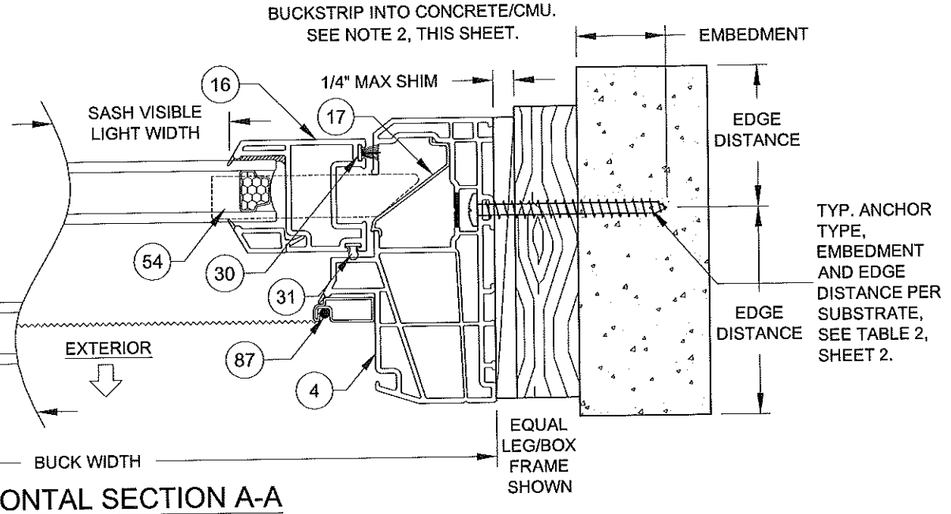

HORIZONTAL SECTION A-A

NOTES:

1) USE ONLY SUBSTRATE-APPROPRIATE ANCHORS LISTED ON TABLE 2, SHEET 2. FOLLOW EMBEDMENT AND EDGE DISTANCE LIMITS. ANY INSTALLATION OPTION SHOWN MAY BE USED ON ANY SIDE OF THE WINDOW.

2) MASONRY ANCHORS MAY BE USED INTO WOOD AS PER TABLE 2, SHEET 2. ALL WOOD BUCKS LESS THAN 1-1/2" THICK ARE TO BE CONSIDERED 1X INSTALLATIONS. 1X WOOD BUCKS ARE OPTIONAL IF UNIT IS INSTALLED DIRECTLY TO SUBSTRATE. WOOD BUCKS DEPICTED AS 2X ARE 1-1/2" THICK OR GREATER. 1X AND 2X BUCKS (WHEN USED) SHALL BE DESIGNED TO PROPERLY TRANSFER LOADS TO THE STRUCTURE. WOOD BUCK DESIGN AND INSTALLATION IS THE RESPONSIBILITY OF THE ENGINEER OR ARCHITECT OF RECORD.

3) VISIBLE LIGHT WIDTH OR HEIGHT (ALSO REFERRED TO AS DAYLIGHT OPENING) IS MEASURED FROM BEADING TO BEADING.

DADE APPROVED MULLION, FBC COMPLIANT ALUMINUM/STEEL FRAMING OR STEEL STUD. MAY BE VERTICAL OR HORIZONTAL. SEE SUBSTRATE PROPERTIES, TABLE 2, SHEET 2.

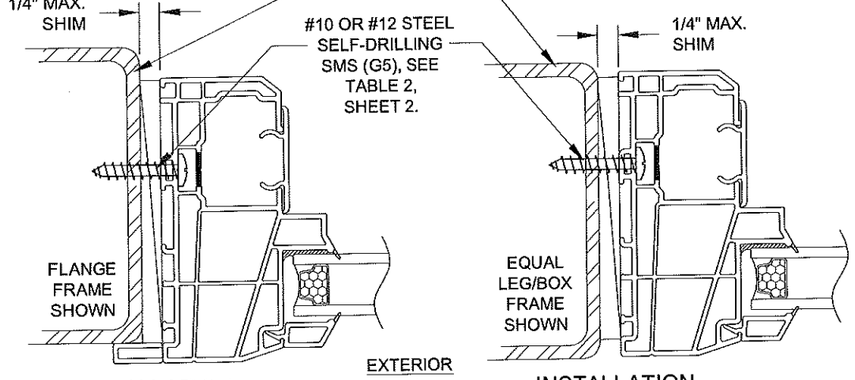

INSTALLATION OPTION 4

ANCHORED THROUGH FRAME INTO METAL

INSTALLATION OPTION 4

ANCHORED THROUGH FRAME INTO METAL

VISIBLE LIGHT FORMULAS

WIDTH
@SASH: BUCK WIDTH - 6-1/2"
@ FIXED LITE: BUCK WIDTH - 4-3/8"

HEIGHT (EQUAL-LITE)
BUCK HEIGHT/2 - 3-15/16"

A. LYNN MILLER, P.E. P.E.# 58705

PRODUCT REVISED as complying with the Florida Building Code Acceptance No. 16-0714.04 Expiration Date: July 30, 2020
By Manuel Perez Miami Dade Product Control

Revised By:	Date:	Revision:
Revised By:	Date:	Revision:

PGT®

1070 TECHNOLOGY DRIVE
N. VENICE, FL 34275
(941)-480-1600
CERT. OF AUTH. #29296

Description: FLANGE & EQUAL-LEG/BOX FRAMES			Drawn By: J ROSOWSKI
Title: SINGLE HUNG WINDOW INSTALLATION - NI			Date: 05/15/15
Series/Model: SH-5400	Scale: NTS	Sheet: 3 OF 12	Drawing No. MD-SH5400-01 / Rev: A

INSTALLATION DETAILS FOR INTEGRAL FIN & J-CHANNEL FRAMES

INSTALLATION OPTION 5

ANCHORED THROUGH INTEGRAL FIN INTO 2X WOOD FRAME OR BUCK- STRIP. SEE NOTE 2, THIS SHEET.

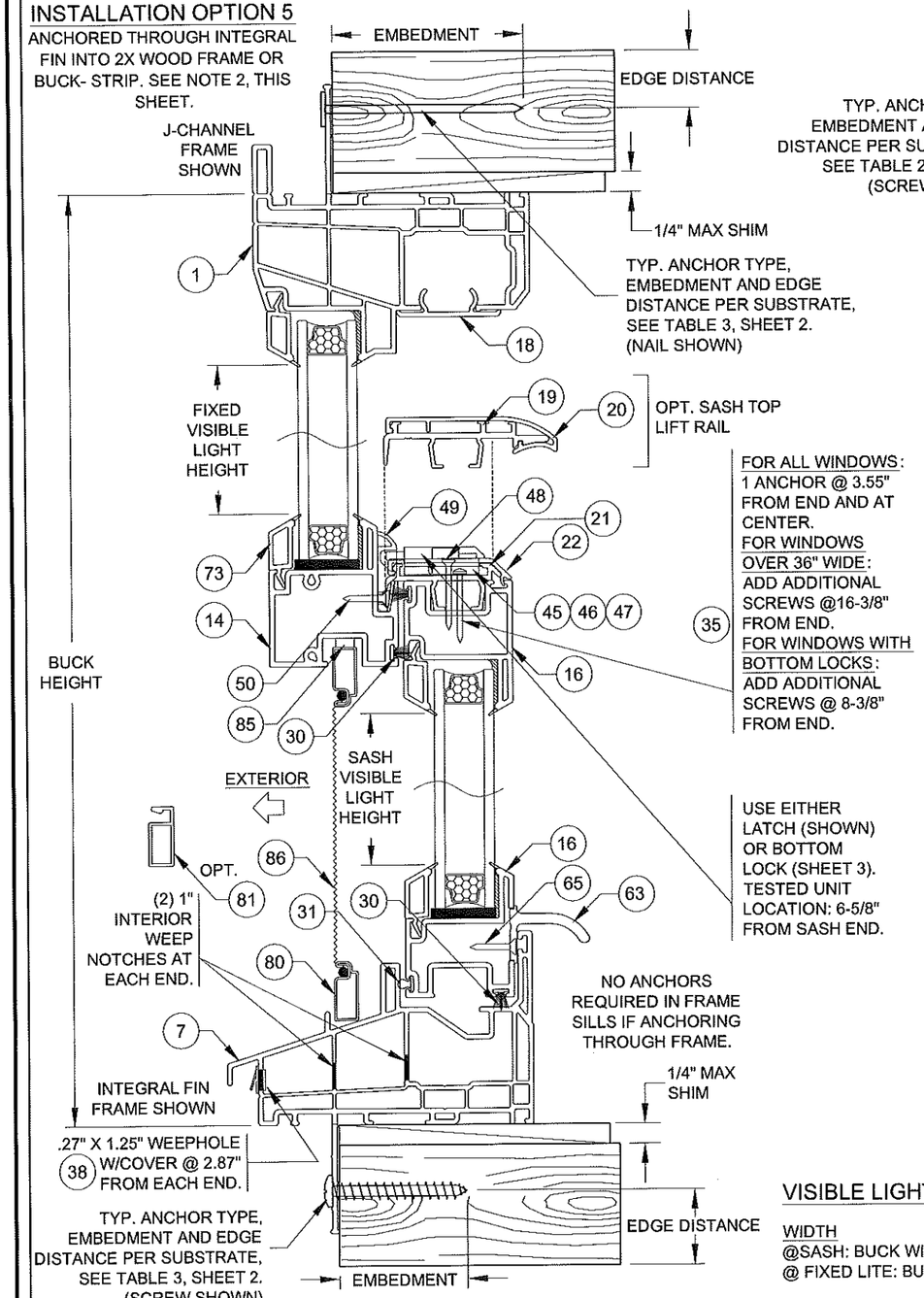

INSTALLATION OPTION 5

ANCHORED THROUGH INTEGRAL FIN INTO 2X WOOD FRAME OR BUCK-STRIP. SEE NOTE 2, THIS SHEET.

VERTICAL SECTION D-D

INSTALLATION OPTION 6

ANCHORED THROUGH FRAME INTO 2X WOOD FRAME OR BUCKSTRIP. SEE NOTE 2, THIS SHEET.

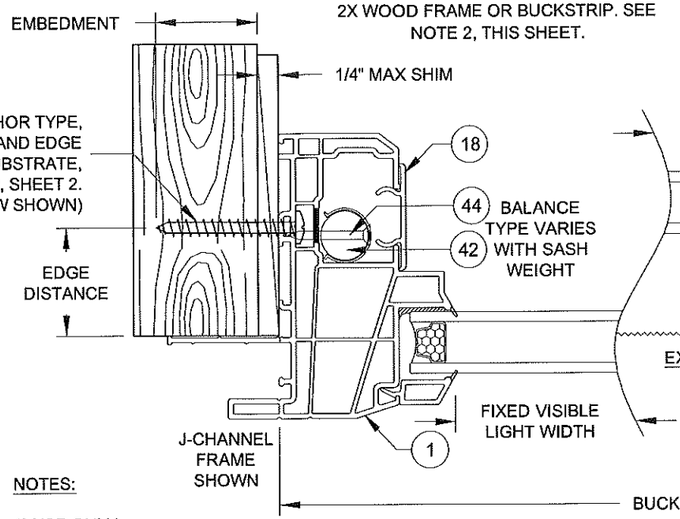

INSTALLATION OPTION 5

ANCHORED THROUGH INTEGRAL FIN INTO 2X WOOD FRAME OR BUCKSTRIP. SEE NOTE 2, THIS SHEET.

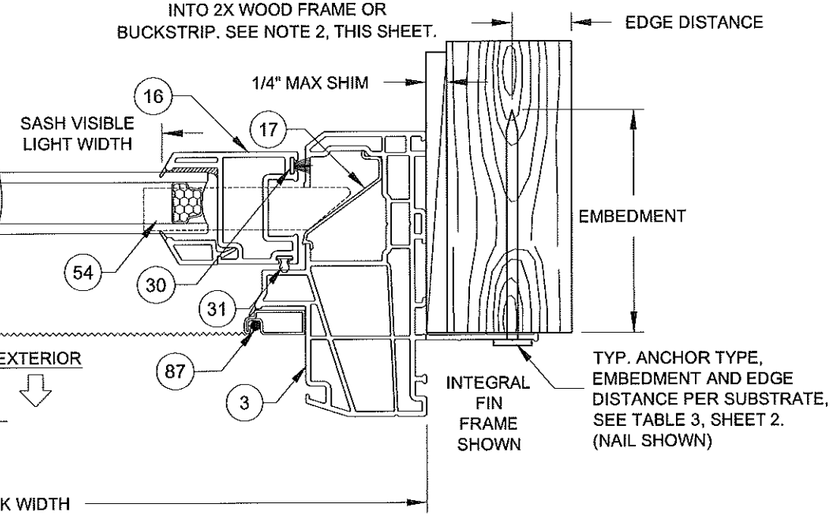

NOTES:

1) USE ONLY SUBSTRATE-APPROPRIATE ANCHORS LISTED ON TABLES 2 & 3 OF SHEET 2. FOLLOW EMBEDMENT AND EDGE DISTANCE LIMITS. ANY INSTALLATION OPTION SHOWN MAY BE USED ON ANY SIDE OF THE WINDOW.

2) MASONRY ANCHORS MAY BE USED INTO WOOD AS PER TABLE 2, SHEET 2. ALL WOOD BUCKS LESS THAN 1-1/2" THICK ARE TO BE CONSIDERED 1X INSTALLATIONS. 1X WOOD BUCKS ARE OPTIONAL IF UNIT IS INSTALLED DIRECTLY TO SUBSTRATE. WOOD BUCKS DEPICTED AS 2X ARE 1-1/2" THICK OR GREATER. 1X AND 2X BUCKS (WHEN USED) SHALL BE DESIGNED TO PROPERLY TRANSFER LOADS TO THE STRUCTURE. WOOD BUCK DESIGN AND INSTALLATION IS THE RESPONSIBILITY OF THE ENGINEER OR ARCHITECT OF RECORD.

3) VISIBLE LIGHT WIDTH OR HEIGHT (ALSO REFERRED TO AS DAYLIGHT OPENING) IS MEASURED FROM BEADING TO BEADING.

HORIZONTAL SECTION C-C

DADE APPROVED MULLION, FBC COMPLIANT ALUMINUM/STEEL FRAMING OR STEEL STUD. MAY BE VERTICAL OR HORIZONTAL. SEE SUBSTRATE PROPERTIES, TABLES 2 & 3, SHEET 2.

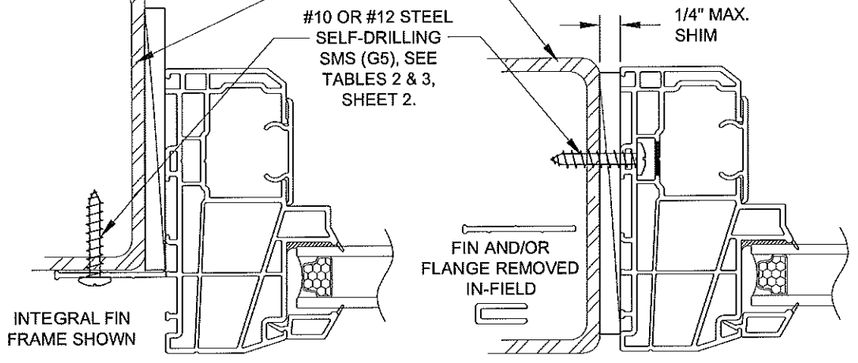

INSTALLATION OPTION 7

ANCHORED THROUGH INTEGRAL FIN INTO METAL

EXTERIOR

INSTALLATION OPTION 8

ANCHORED THROUGH FRAME INTO METAL (INTEGRAL FIN/FLANGE REMOVED)

VISIBLE LIGHT FORMULAS

WIDTH
@SASH: BUCK WIDTH - 6-1/2"
@ FIXED LITE: BUCK WIDTH - 4-3/8"

HEIGHT (EQUAL-LITE)
BUCK HEIGHT/2 - 3-15/16"

A. LYNN MILLER, P.E.
P.E.# 58705

1070 TECHNOLOGY DRIVE
N. VENICE, FL 34275
(941)-480-1600
CERT. OF AUTH. #29296

PRODUCT REVISED as complying with the Florida Building Code
Acceptance No 16-0714.04
Expiration Date July 30, 2020
By Manuel Perez
Miami Dade Product Control

Revised By:	Date:	Revision:
Revised By:	Date:	Revision:

Description: J-CHANNEL & INTEGRAL FIN FRAMES				Drawn By: J ROSOWSKI
Title: SINGLE HUNG WINDOW INSTALLATION - NI				Date: 05/15/15
Series/Model: SH-5400	Scale: NTS	Sheet: 4 OF 12	Drawing No. MD-SH5400-01	Rev: A

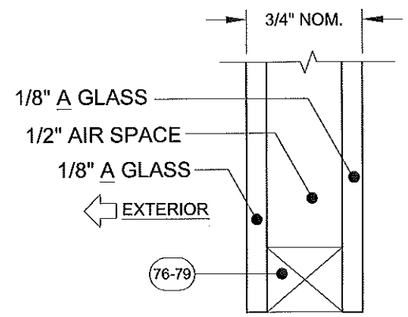

GLASS TYPE 1

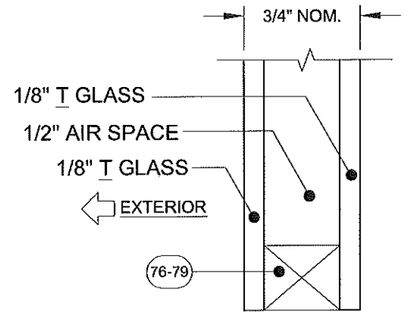

GLASS TYPE 2

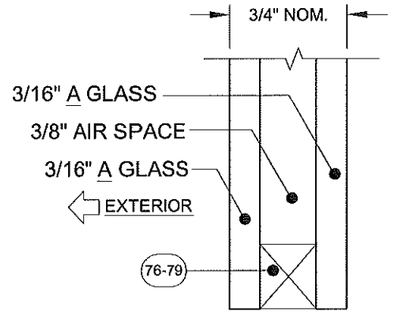

GLASS TYPE 3

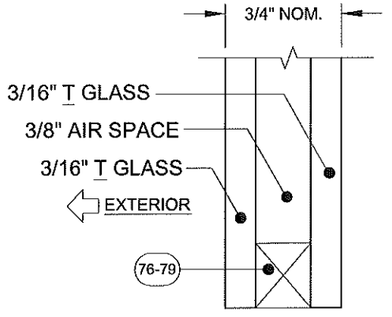

GLASS TYPE 4

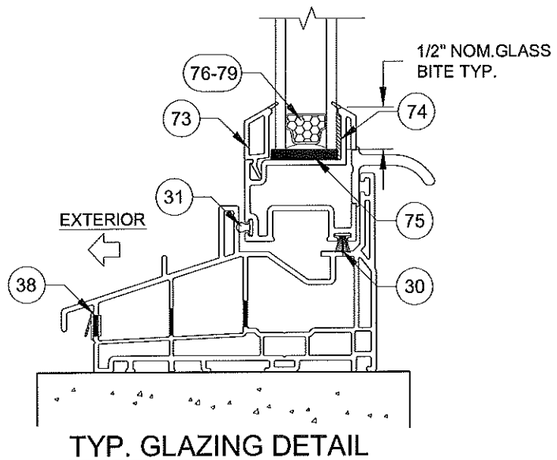

TYP. GLAZING DETAIL

GLAZING NOTES:
"A" = ANNEALED
"T" = TEMPERED

A. LYNN MILLER, P.E.
P.E.# 58705

1070 TECHNOLOGY DRIVE
N. VENICE, FL 34275
(941)-480-1600
CERT. OF AUTH. #29296

PRODUCT REVISED
as complying with the Florida
Building Code
Acceptance No 16-0714.04
Expiration Date July 30, 2020
By Manuel Perez
Miami Dade Product Control

Revised By:	Date:	Revision:
Revised By:	Date:	Revision:

Description:	Drawn By:
GLAZING DETAILS	J ROSOWSKI

Title:	Date:
SINGLE HUNG WINDOW INSTALLATION - NI	05/15/15

Series/Model:	Scale:	Sheet:	Drawing No.	Rev:
SH-5400	NTS	5 OF 12	MD-SH5400-01	A

TABLE 4:

Glass Types 1 - 4 / Reinf. Level R1	Bottom Sash Description for given Range @ Window Height Shown	Sash Height Range (in)	Design Pressure (lbs/ft²)													
			Window Buck Width (in)													
			18		24		32		36		40		48		52.125	
Window Buck Height (in)																
23.5	Equal-lite	11.394	+50.0	-100.0	+50.0	-100.0	+50.0	-100.0	+50.0	-100.0	+50.0	-100.0	+50.0	-99.0	+50.0	-92.0
28	Standard Cottage	14.517 - 15.870	+50.0	-100.0	+50.0	-100.0	+50.0	-100.0	+50.0	-100.0	+50.0	-100.0	+50.0	-97.0	+50.0	-90.0
	Equal-lite	11.583 - 14.516	+50.0	-100.0	+50.0	-100.0	+50.0	-100.0	+50.0	-100.0	+50.0	-100.0	+50.0	-100.0	+50.0	-97.1
	Standard Proview	11.377 - 11.582	+50.0	-100.0	+50.0	-100.0	+50.0	-100.0	+50.0	-100.0	+50.0	-100.0	+50.0	-100.0	+50.0	-94.0
37.375	Tallest	23.517 - 25.286	+50.0	-100.0	+50.0	-100.0	+50.0	-100.0	+50.0	-100.0	+50.0	-100.0	+50.0	-88.0	+50.0	-77.9
	Standard Cottage	20.958 - 23.516	+50.0	-100.0	+50.0	-100.0	+50.0	-100.0	+50.0	-100.0	+50.0	-100.0	+50.0	-88.6	+50.0	-78.1
	Equal-lite	17.517 - 20.957	+50.0	-100.0	+50.0	-100.0	+50.0	-100.0	+50.0	-100.0	+50.0	-100.0	+50.0	-86.6	+50.0	-78.0
	Standard Proview	14.517 - 17.516	+50.0	-100.0	+50.0	-100.0	+50.0	-100.0	+50.0	-100.0	+50.0	-100.0	+50.0	-84.2	+50.0	-75.2
	Shortest	11.377 - 14.516	+50.0	-100.0	+50.0	-100.0	+50.0	-100.0	+50.0	-100.0	+50.0	-100.0	+50.0	-83.0	+50.0	-73.6
44	Tallest	27.583 - 31.911	+50.0	-100.0	+50.0	-100.0	+50.0	-100.0	+50.0	-97.0	+50.0	-89.0	+50.0	-76.0	+50.0	-71.0
	Custom Size	26.517 - 27.582	+50.0	-100.0	+50.0	-100.0	+50.0	-100.0	+50.0	-100.0	+50.0	-100.0	+50.0	-82.3	+50.0	-73.9
	Standard Cottage	23.517 - 26.516	+50.0	-100.0	+50.0	-100.0	+50.0	-100.0	+50.0	-100.0	+50.0	-100.0	+50.0	-79.0	+50.0	-70.9
	Equal-lite	20.517 - 23.516	+50.0	-100.0	+50.0	-100.0	+50.0	-100.0	+50.0	-100.0	+50.0	-100.0	+50.0	-78.3	+50.0	-70.3
	Standard Proview	17.517 - 20.516	+50.0	-100.0	+50.0	-100.0	+50.0	-100.0	+50.0	-100.0	+50.0	-100.0	+50.0	-78.5	+50.0	-70.4
	Custom Size	14.517 - 17.516	+50.0	-100.0	+50.0	-100.0	+50.0	-100.0	+50.0	-100.0	+50.0	-100.0	+50.0	-79.5	+50.0	-71.2
	Shortest	11.377 - 14.516	+50.0	-100.0	+50.0	-100.0	+50.0	-100.0	+50.0	-100.0	+50.0	-94.1	+50.0	-78.8	+50.0	-71.8
48	Tallest	31.583 - 35.911	+50.0	-100.0	+50.0	-100.0	+50.0	-90.9	+50.0	-89.3	+50.0	-89.3	+50.0	-74.9	+50.0	-69.1
	Standard Cottage	26.517 - 31.582	+50.0	-100.0	+50.0	-100.0	+50.0	-100.0	+50.0	-100.0	+50.0	-96.4	+50.0	-73.8	+50.0	-65.8
	Equal-lite	20.517 - 26.516	+50.0	-100.0	+50.0	-100.0	+50.0	-100.0	+50.0	-100.0	+50.0	-93.2	+50.0	-71.6	+50.0	-63.9
	Standard Proview	17.517 - 20.516	+50.0	-100.0	+50.0	-100.0	+50.0	-100.0	+50.0	-100.0	+50.0	-97.1	+50.0	-74.9	+50.0	-67.0
	Custom Size	14.517 - 17.516	+50.0	-100.0	+50.0	-100.0	+50.0	-100.0	+50.0	-100.0	+50.0	-92.0	+50.0	-76.3	+50.0	-68.1
	Custom Size	12.517 - 14.516	+50.0	-100.0	+50.0	-100.0	+50.0	-100.0	+50.0	-96.7	+50.0	-87.8	+50.0	-73.6	+50.0	-68.9
	Shortest	11.377 - 12.516	+50.0	-100.0	+50.0	-100.0	+50.0	-96.0	+50.0	-93.8	+50.0	-85.7	+50.0	-72.2	+50.0	-67.3
49.625	Tallest	33.208 - 37.536	+50.0	-100.0	+50.0	-95.4	+50.0	-84.3	+50.0	-82.2	+50.0	-81.9	+50.0	-71.8	+50.0	-66.8
	Standard Cottage	26.517 - 33.207	+50.0	-100.0	+50.0	-100.0	+50.0	-100.0	+50.0	-100.0	+50.0	-93.6	+50.0	-71.1	+50.0	-63.3
	Equal-lite	23.517 - 26.516	+50.0	-100.0	+50.0	-100.0	+50.0	-100.0	+50.0	-100.0	+50.0	-94.5	+50.0	-72.8	+50.0	-65.1
	Custom Size	20.517 - 23.516	+50.0	-100.0	+50.0	-100.0	+50.0	-100.0	+50.0	-100.0	+50.0	-94.6	+50.0	-72.9	+50.0	-65.1
	Standard Proview	17.517 - 20.516	+50.0	-100.0	+50.0	-100.0	+50.0	-100.0	+50.0	-100.0	+50.0	-96.0	+50.0	-73.7	+50.0	-65.8
	Custom Size	14.517 - 17.516	+50.0	-100.0	+50.0	-100.0	+50.0	-100.0	+50.0	-99.0	+50.0	-89.8	+50.0	-75.1	+50.0	-67.1
	Custom Size	12.517 - 14.516	+50.0	-100.0	+50.0	-100.0	+50.0	-93.7	+50.0	-92.5	+50.0	-85.7	+50.0	-72.2	+50.0	-67.3
	Shortest	11.377 - 12.516	+50.0	-100.0	+50.0	-99.6	+50.0	-88.7	+50.0	-87.0	+50.0	-81.9	+50.0	-69.5	+50.0	-64.4
62	Tallest	36.517 - 41.644	+50.0	-100.0	+50.0	-82.6	+50.0	-71.2	+50.0	-68.5	+50.0	-67.1	+50.0	-66.1	+50.0	-58.2
	Standard Cottage	31.517 - 36.516	+50.0	-100.0	+50.0	-99.2	+50.0	-88.3	+50.0	-86.6	+50.0	-86.4	+50.0	-64.2	+50.0	-56.6
	Equal-lite	26.517 - 31.516	+50.0	-100.0	+50.0	-100.0	+50.0	-100.0	+50.0	-96.7	+50.0	-85.7	+50.0	-63.7	+50.0	-56.3
	Standard Proview	23.517 - 26.516	+50.0	-100.0	+50.0	-98.7	+50.0	-87.8	+50.0	-86.0	+50.0	-81.9	+50.0	-65.4	+50.0	-57.8
	Custom Size	20.517 - 23.516	+50.0	-100.0	+50.0	-88.3	+50.0	-77.0	+50.0	-74.6	+50.0	-73.6	+50.0	-64.8	+50.0	-58.8
	Custom Size	17.517 - 20.516	+50.0	-97.3	+50.0	-79.9	+50.0	-68.7	+50.0	-65.8	+50.0	-64.2	+50.0	-60.5	+50.0	-55.6
	Custom Size	14.517 - 17.516	+50.0	-89.6	+50.0	-73.0	+50.0	-61.9	+50.0	-58.9	+50.0	-57.0	+50.0	-55.9	+50.0	-52.6
	Custom Size	13.017 - 14.516	+50.0	-86.1	+50.0	-70.0	+50.0	-59.0	+50.0	-56.0	+50.0	-53.9	+50.0	-52.4	+50.0	-51.5
	Shortest	11.864 - 13.016	+50.0	-83.7	+50.0	-67.8	+50.0	-57.0	+50.0	-53.9	+50.0	-51.8	+50.0	-50.0	+50.0	-50.0
75	Tallest	39.517 - 41.644	+50.0	-100.0	+50.0	-82.6	+50.0	-71.2	+50.0	-68.5	+50.0	-67.1	+50.0	-60.6	+50.0	-53.0
	Custom Size	38.517 - 39.516	+50.0	-100.0	+50.0	-88.7	+50.0	-77.5	+50.0	-75.0	+50.0	-74.1	+50.0	-60.7	+50.0	-53.1
	Equal-lite	35.517 - 38.516	+50.0	-100.0	+50.0	-92.0	+50.0	-80.8	+50.0	-78.5	+50.0	-77.9	+50.0	-60.0	+50.0	-52.4
	Custom Size	32.517 - 35.516	+50.0	-100.0	+50.0	-85.3	+50.0	-74.0	+50.0	-71.4	+50.0	-70.2	+50.0	-60.2	+50.0	-52.5
	Standard Proview	29.517 - 32.516	+50.0	-94.6	+50.0	-77.5	+50.0	-66.3	+50.0	-63.3	+50.0	-61.6	+50.0	-59.2	+50.0	-53.0
	Custom Size	26.517 - 29.516	+50.0	-87.2	+50.0	-71.0	+50.0	-60.0	+50.0	-56.9	+50.0	-54.9	+50.0	-53.5	+50.0	-51.5
	Shortest	25.516 - 26.516	+50.0	-85.0	+50.0	-69.0	+50.0	-58.1	+50.0	-55.0	+50.0	-53.0	+50.0	-51.4	+50.0	-50.6
84	Equal-lite	38.517 - 41.644	+50.0	-94.6	+50.0	-77.5	+50.0	-66.3	+50.0	-63.3	+50.0	-61.6	+50.0	-58.4	+50.0	-50.5
	Custom Size	35.517 - 38.516	+50.0	-87.2	+50.0	-71.0	+50.0	-60.0	+50.0	-56.9	+50.0	-54.9	+50.0	-53.5	+50.0	-50.8
	Standard Proview	33.618 - 35.516	+50.0	-83.7	+50.0	-67.8	+50.0	-57.0	+50.0	-53.9	+50.0	-51.8	+50.0	-50.0	+50.0	-50.0
91.78	Tallest	** - 41.644	+50.0	-83.7	+50.0	-67.8	+50.0	-57.0	+50.0	-53.9	+50.0	-51.8	+50.0	-50.0	+50.0	-50.0

SEE TABLE 6, SHEET 8 FOR ANCHOR GROUP AND QUANTITY.
** MIN. SASH HEIGHT = WINDOW BUCK HEIGHT - 50.136

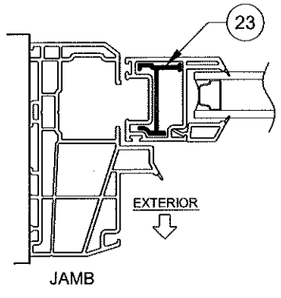

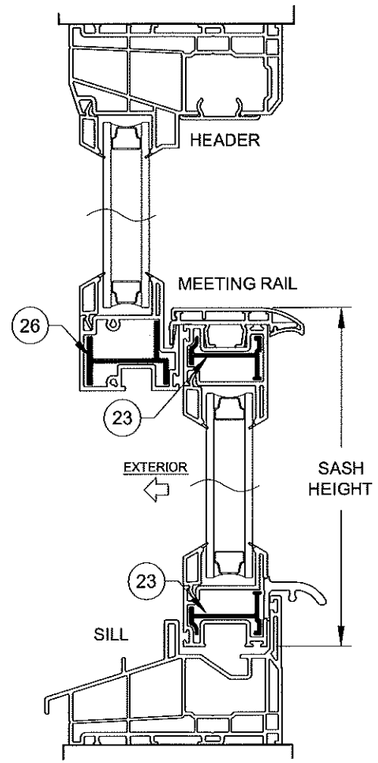

SECTION DETAIL FOR WINDOWS WITH
LEVEL R1 REINFORCEMENT & GLASS TYPES 1-4

(REINFORCEMENTS SHOWN IN FIGURES ABOVE APPLY TO ALL FRAME TYPES & CONFIGURATIONS)

NOTES:

1) USE THIS TABLE FOR ALL WINDOWS INSTALLED THROUGH THE FRAME OR INTEGRAL FIN.

2) FRAME DIMENSIONS ARE BUCK. SASH HEIGHT IS AS PER THE FIGURE.

3) FOR SIZES NOT SHOWN, ROUND UP TO THE NEXT AVAILABLE WIDTH OR HEIGHT DIMENSION SHOWN ON THE TABLE.

STATE OF FLORIDA A. LYNN MILLER LICENSE No. 58705 PROFESSIONAL ENGINEER
6/14/16
A. LYNN MILLER, P.E.
P.E.# 58705

PRODUCT REVISED
as complying with the Florida Building Code
Acceptance No 16-0714.04
Expiration Date July 30, 2020
By Manuel Perez
Miami Dade Product Control

PGT®
1070 TECHNOLOGY DRIVE
N. VENICE, FL 34275
(941)-480-1600
CERT. OF AUTH. #29296

Revised By:	Date:	Revision:
Revised By:	Date:	Revision:

Description: DESIGN PRESSURE TABLE
Drawn By: J ROSOWSKI
Title: SINGLE HUNG WINDOW INSTALLATION - NI
Date: 05/15/15
Series/Model: SH-5400
Scale: NTS
Sheet: 6 OF 12
Drawing No. MD-SH5400-01
Rev: A

TABLE 5:

Glass Types 2 - 4 / Reinf. Level R2	Bottom Sash Description for given Range @ Window Height Shown	Sash Height Range (in)	Design Pressure (lbs/ft²)													
			Window Buck Width (in)													
			18		24		32		36		40		48		52.125	
Window Buck Height (in) 23.5	Equal-lite	11.394	+65.0	-130.0	+65.0	-130.0	+65.0	-130.0	+65.0	-130.0	+65.0	-130.0	+65.0	-129.0	+65.0	-120.0
28	Standard Cottage	14.517 - 15.870	+65.0	-130.0	+65.0	-130.0	+65.0	-130.0	+65.0	-130.0	+65.0	-130.0	+65.0	-127.0	+65.0	-118.0
	Equal-lite	11.583 - 14.516	+65.0	-130.0	+65.0	-130.0	+65.0	-130.0	+65.0	-130.0	+65.0	-130.0	+65.0	-130.0	+65.0	-130.0
	Standard Proview	11.377 - 11.582	+65.0	-130.0	+65.0	-130.0	+65.0	-130.0	+65.0	-130.0	+65.0	-130.0	+65.0	-130.0	+65.0	-123.0
37.375	Tallest	23.517 - 25.286	+65.0	-130.0	+65.0	-130.0	+65.0	-130.0	+65.0	-130.0	+65.0	-130.0	+65.0	-122.0	+65.0	-113.0
	Standard Cottage	20.958 - 23.516	+65.0	-130.0	+65.0	-130.0	+65.0	-130.0	+65.0	-130.0	+65.0	-130.0	+65.0	-124.6	+65.0	-112.3
	Equal-lite	17.517 - 20.957	+65.0	-130.0	+65.0	-130.0	+65.0	-130.0	+65.0	-130.0	+65.0	-130.0	+65.0	-121.2	+65.0	-109.3
	Standard Proview	14.517 - 17.516	+65.0	-130.0	+65.0	-130.0	+65.0	-130.0	+65.0	-130.0	+65.0	-130.0	+65.0	-122.2	+65.0	-110.2
	Shortest	11.377 - 14.516	+65.0	-130.0	+65.0	-130.0	+65.0	-130.0	+65.0	-130.0	+65.0	-130.0	+65.0	-116.0	+65.0	-107.0
44	Tallest	27.583 - 31.911	+65.0	-130.0	+65.0	-130.0	+65.0	-130.0	+65.0	-127.0	+65.0	-116.0	+65.0	-99.0	+65.0	-93.0
	Custom Size	26.517 - 27.582	+65.0	-130.0	+65.0	-130.0	+65.0	-130.0	+65.0	-130.0	+65.0	-130.0	+65.0	-116.3	+65.0	-103.4
	Standard Cottage	23.517 - 26.516	+65.0	-130.0	+65.0	-130.0	+65.0	-130.0	+65.0	-130.0	+65.0	-130.0	+65.0	-110.6	+65.0	-99.2
	Equal-lite	20.517 - 23.516	+65.0	-130.0	+65.0	-130.0	+65.0	-130.0	+65.0	-130.0	+65.0	-130.0	+65.0	-109.6	+65.0	-98.4
	Standard Proview	17.517 - 20.516	+65.0	-130.0	+65.0	-130.0	+65.0	-130.0	+65.0	-130.0	+65.0	-130.0	+65.0	-109.9	+65.0	-98.6
	Custom Size	14.517 - 17.516	+65.0	-130.0	+65.0	-130.0	+65.0	-130.0	+65.0	-130.0	+65.0	-130.0	+65.0	-111.3	+65.0	-99.7
	Shortest	11.377 - 14.516	+65.0	-130.0	+65.0	-130.0	+65.0	-130.0	+65.0	-130.0	+65.0	-130.0	+65.0	-113.8	+65.0	-101.7
48	Tallest	31.583 - 35.911	+65.0	-130.0	+65.0	-130.0	+65.0	-127.2	+65.0	-125.1	+65.0	-116.0	+65.0	-99.0	+65.0	-93.0
	Standard Cottage	26.517 - 31.582	+65.0	-130.0	+65.0	-130.0	+65.0	-130.0	+65.0	-130.0	+65.0	-130.0	+65.0	-103.3	+65.0	-92.1
	Equal-lite	20.517 - 26.516	+65.0	-130.0	+65.0	-130.0	+65.0	-130.0	+65.0	-130.0	+65.0	-130.0	+65.0	-100.2	+65.0	-89.5
	Standard Proview	17.517 - 20.516	+65.0	-130.0	+65.0	-130.0	+65.0	-130.0	+65.0	-130.0	+65.0	-130.0	+65.0	-104.8	+65.0	-93.7
	Custom Size	14.517 - 17.516	+65.0	-130.0	+65.0	-130.0	+65.0	-130.0	+65.0	-130.0	+65.0	-130.0	+65.0	-106.8	+65.0	-95.3
	Custom Size	12.517 - 14.516	+65.0	-130.0	+65.0	-130.0	+65.0	-130.0	+65.0	-130.0	+65.0	-130.0	+65.0	-110.9	+65.0	-98.8
	Shortest	11.377 - 12.516	+65.0	-130.0	+65.0	-130.0	+65.0	-130.0	+65.0	-130.0	+65.0	-130.0	+65.0	-114.5	+65.0	-101.8
49.625	Tallest	33.208 - 37.536	+65.0	-130.0	+65.0	-130.0	+65.0	-118.0	+65.0	-115.1	+65.0	-114.7	+65.0	-99.0	+65.0	-93.0
	Standard Cottage	26.517 - 33.207	+65.0	-130.0	+65.0	-130.0	+65.0	-130.0	+65.0	-130.0	+65.0	-130.0	+65.0	-99.6	+65.0	-88.6
	Equal-lite	23.517 - 26.516	+65.0	-130.0	+65.0	-130.0	+65.0	-130.0	+65.0	-130.0	+65.0	-130.0	+65.0	-101.9	+65.0	-91.1
	Custom Size	20.517 - 23.516	+65.0	-130.0	+65.0	-130.0	+65.0	-130.0	+65.0	-130.0	+65.0	-130.0	+65.0	-102.0	+65.0	-91.2
	Standard Proview	17.517 - 20.516	+65.0	-130.0	+65.0	-130.0	+65.0	-130.0	+65.0	-130.0	+65.0	-130.0	+65.0	-103.2	+65.0	-92.1
	Custom Size	14.517 - 17.516	+65.0	-130.0	+65.0	-130.0	+65.0	-130.0	+65.0	-130.0	+65.0	-130.0	+65.0	-105.4	+65.0	-93.9
	Custom Size	12.517 - 14.516	+65.0	-130.0	+65.0	-130.0	+65.0	-130.0	+65.0	-129.5	+65.0	-129.5	+65.0	-109.6	+65.0	-97.4
	Shortest	11.377 - 12.516	+65.0	-130.0	+65.0	-130.0	+65.0	-124.2	+65.0	-121.8	+65.0	-121.7	+65.0	-113.2	+65.0	-100.4
62	Tallest	36.517 - 41.644	+65.0	-130.0	+65.0	-115.6	+65.0	-99.7	+65.0	-95.9	+65.0	-93.9	+65.0	-92.7	+65.0	-81.5
	Standard Cottage	31.517 - 36.516	+65.0	-130.0	+65.0	-130.0	+65.0	-123.6	+65.0	-121.2	+65.0	-121.0	+65.0	-89.8	+65.0	-79.3
	Equal-lite	26.517 - 31.516	+65.0	-130.0	+65.0	-130.0	+65.0	-130.0	+65.0	-130.0	+65.0	-119.9	+65.0	-89.2	+65.0	-78.8
	Standard Proview	23.517 - 26.516	+65.0	-130.0	+65.0	-130.0	+65.0	-122.9	+65.0	-120.4	+65.0	-120.2	+65.0	-91.6	+65.0	-81.0
	Custom Size	20.517 - 23.516	+65.0	-130.0	+65.0	-123.7	+65.0	-107.9	+65.0	-104.4	+65.0	-103.1	+65.0	-93.4	+65.0	-82.4
	Custom Size	17.517 - 20.516	+65.0	-130.0	+65.0	-111.9	+65.0	-96.1	+65.0	-92.1	+65.0	-89.9	+65.0	-89.3	+65.0	-84.5
	Custom Size	14.517 - 17.516	+65.0	-125.4	+65.0	-102.2	+65.0	-86.7	+65.0	-82.4	+65.0	-79.8	+65.0	-78.2	+65.0	-78.2
	Custom Size	13.017 - 14.516	+65.0	-120.6	+65.0	-98.0	+65.0	-82.6	+65.0	-78.3	+65.0	-75.5	+65.0	-73.4	+65.0	-73.4
	Shortest	11.864 - 13.016	+65.0	-117.1	+65.0	-94.9	+65.0	-79.8	+65.0	-75.4	+65.0	-72.5	+65.0	-70.0	+65.0	-70.0
75	Tallest	39.517 - 41.644	+65.0	-130.0	+65.0	-115.6	+65.0	-99.7	+65.0	-95.9	+65.0	-93.9	+65.0	-84.9	+65.0	-74.2
	Custom Size	38.517 - 39.516	+65.0	-130.0	+65.0	-124.2	+65.0	-108.4	+65.0	-105.0	+65.0	-103.7	+65.0	-84.9	+65.0	-74.3
	Equal-lite	35.517 - 38.516	+65.0	-130.0	+65.0	-128.8	+65.0	-113.1	+65.0	-109.9	+65.0	-109.0	+65.0	-84.0	+65.0	-73.4
	Custom Size	32.517 - 35.516	+65.0	-130.0	+65.0	-119.5	+65.0	-103.6	+65.0	-99.9	+65.0	-98.3	+65.0	-84.2	+65.0	-73.6
	Standard Proview	29.517 - 32.516	+65.0	-130.0	+65.0	-108.5	+65.0	-92.8	+65.0	-88.7	+65.0	-86.3	+65.0	-85.2	+65.0	-74.3
	Custom Size	26.517 - 29.516	+65.0	-122.1	+65.0	-99.3	+65.0	-83.9	+65.0	-79.7	+65.0	-76.9	+65.0	-74.9	+65.0	-74.9
	Shortest	25.516 - 26.516	+65.0	-119.1	+65.0	-96.6	+65.0	-81.4	+65.0	-77.1	+65.0	-74.2	+65.0	-71.9	+65.0	-71.9
84	Equal-lite	38.517 - 41.644	+65.0	-130.0	+65.0	-108.5	+65.0	-92.8	+65.0	-88.7	+65.0	-86.3	+65.0	-81.8	+65.0	-70.6
	Custom Size	35.517 - 38.516	+65.0	-122.1	+65.0	-99.3	+65.0	-83.9	+65.0	-79.7	+65.0	-76.9	+65.0	-74.9	+65.0	-71.1
	Standard Proview	33.818 - 35.516	+65.0	-117.1	+65.0	-94.9	+65.0	-79.8	+65.0	-75.4	+65.0	-72.5	+65.0	-70.0	+65.0	-70.0
91.78	Tallest	** - 41.644	+65.0	-117.1	+65.0	-94.9	+65.0	-79.8	+65.0	-75.4	+65.0	-72.5	+65.0	-70.0	+65.0	-70.0

SEE TABLE 7, SHEET 9 FOR ANCHOR GROUP AND QUANTITY.
** MIN. SASH HEIGHT = WINDOW BUCK HEIGHT - 50.136

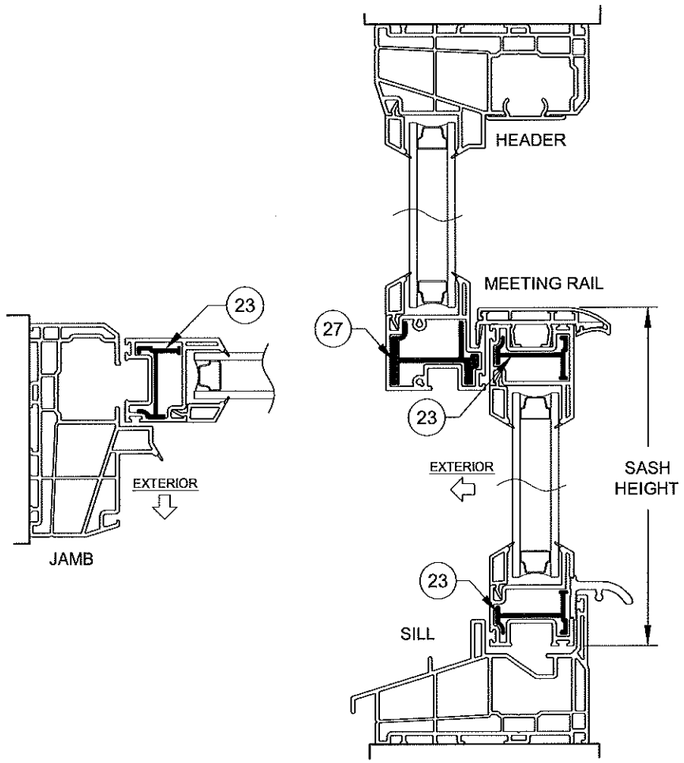

SECTION DETAIL FOR WINDOWS WITH LEVEL R2 REINFORCEMENT & GLASS TYPES 2-4

(REINFORCEMENTS SHOWN IN FIGURES ABOVE APPLY TO ALL FRAME TYPES & CONFIGURATIONS)

NOTES:

1) USE THIS TABLE FOR ALL WINDOWS INSTALLED THROUGH THE FRAME OR INTEGRAL FIN.

2) FRAME DIMENSIONS ARE BUCK. SASH HEIGHT IS AS PER THE FIGURE.

3) FOR SIZES NOT SHOWN, ROUND UP TO THE NEXT AVAILABLE WIDTH OR HEIGHT DIMENSION SHOWN ON THE TABLE.

A. LYNN MILLER, P.E.
P.E.# 58705

PGT®

1070 TECHNOLOGY DRIVE
N. VENICE, FL 34275
(941)-480-1600

CERT. OF AUTH. #29296

PRODUCT REVISED
as complying with the Florida Building Code
Acceptance No 16-0714.04
Expiration Date July 30, 2020
By Manuel Perez
Miami Dade Product Control

Revised By:	Date:	Revision:
Revised By:	Date:	Revision:

Description: DESIGN PRESSURE TABLE
Drawn By: J ROSOWSKI

Title: SINGLE HUNG WINDOW INSTALLATION - NI
Date: 05/15/15

Series/Model:	Scale:	Sheet:	Drawing No.	Rev:
SH-5400	NTS	7 OF 12	MD-SH5400-01	A

TABLE 6:

FOR ANCHOR GROUP D, TABLE 7, SHEET 9 MAY BE USED.

Anchor Quantities Required for "Through-Frame" Installation

Glass Types 1, 2, 3 & 4 Reinf. Level R1

Anchor Group A

Window Buck Height (in)	Bottom Sash Description for given Range @ Window Height Shown	Sash Height Range (in)	18" Wide Jamb Above MR	18" Wide Jamb Below MR	18" Wide Header	24" Wide Jamb Above MR	24" Wide Jamb Below MR	24" Wide Header	32" Wide Jamb Above MR	32" Wide Jamb Below MR	32" Wide Header	36" Wide Jamb Above MR	36" Wide Jamb Below MR	36" Wide Header	40" Wide Jamb Above MR	40" Wide Jamb Below MR	40" Wide Header	48" Wide Jamb Above MR	48" Wide Jamb Below MR	48" Wide Header	52-1/8" Wide Jamb Above MR	52-1/8" Wide Jamb Below MR	52-1/8" Wide Header
23.5	Equal-lite	11.394	1	2	1	1	2	1	1	2	2	1	2	2	1	2	2	1	2	2	1	2	2
28	Standard Cottage	14.517 - 15.870	1	2	1	1	2	1	1	2	2	1	2	2	1	3	2	1	3	2	1	3	2
	Equal-lite	11.583 - 14.516	1	2	1	1	2	1	1	2	2	2	2	2	2	2	2	2	3	2	2	3	3
	Standard Proview	11.377 - 11.582	2	2	1	2	2	1	2	2	2	2	2	2	2	2	2	2	2	2	2	2	2
37.375	Tallest	23.517 - 25.286	1	2	1	1	2	1	1	3	2	1	3	2	1	4	2	1	4	2	1	4	2
	Standard Cottage	20.958 - 23.516	1	2	1	1	2	1	1	3	2	2	3	2	2	3	2	2	4	2	2	4	2
	Equal-lite	17.517 - 20.957	2	2	1	2	2	1	2	3	2	2	3	2	2	3	2	2	3	2	2	3	2
	Standard Proview	14.517 - 17.516	2	2	1	2	2	1	2	2	2	2	3	2	2	3	2	2	3	3	2	3	3
	Shortest	11.377 - 14.516	2	2	1	2	2	1	2	2	2	2	2	2	2	2	3	2	2	3	2	2	3
44	Tallest	27.583 - 31.911	1	3	1	1	3	1	1	4	2	1	4	2	1	4	2	1	4	2	1	4	2
	Custom Size	26.517 - 27.582	2	3	1	2	3	1	2	3	2	2	4	2	2	4	2	2	4	2	2	4	2
	Standard Cottage	23.517 - 26.516	2	3	1	2	3	1	2	3	2	2	3	2	2	4	2	2	4	2	2	4	2
	Equal-lite	20.517 - 23.516	2	2	1	2	2	1	2	3	2	2	3	2	2	3	2	2	3	2	2	3	2
	Standard Proview	17.517 - 20.516	2	2	1	2	2	1	2	3	2	2	3	2	3	3	3	2	3	3	2	3	3
	Custom Size	14.517 - 17.516	3	2	1	3	2	1	3	2	2	3	3	2	3	3	3	3	3	3	3	3	3
	Shortest	11.377 - 14.516	3	2	1	3	2	1	3	2	2	3	2	2	3	2	3	3	2	3	3	2	3
48	Tallest	31.583 - 35.911	1	3	1	1	3	1	1	4	2	1	4	2	1	4	2	1	4	2	1	5	2
	Standard Cottage	26.517 - 31.582	2	3	1	2	3	1	2	4	2	2	4	2	2	4	2	2	4	2	2	4	2
	Equal-lite	20.517 - 26.516	2	3	1	2	3	1	2	3	2	2	3	2	2	4	2	2	3	2	2	3	2
	Standard Proview	17.517 - 20.516	3	2	1	3	2	1	3	3	2	3	3	2	3	3	3	3	3	3	3	3	3
	Custom Size	14.517 - 17.516	3	2	1	3	2	1	3	2	2	3	3	2	3	3	3	3	3	3	3	2	3
	Custom Size	12.517 - 14.516	3	2	1	3	2	1	3	2	2	3	2	2	3	2	3	3	2	3	3	2	3
	Shortest	11.377 - 12.516	3	2	1	3	2	1	3	2	2	3	2	2	3	2	3	3	2	3	3	2	3
49.625	Tallest	33.208 - 37.536	1	3	1	1	3	1	1	4	2	1	4	2	1	4	2	1	5	2	1	5	2
	Standard Cottage	26.517 - 33.207	2	3	1	2	3	1	2	4	2	2	4	2	2	4	2	2	4	2	2	4	2
	Equal-lite	23.517 - 26.516	2	3	1	2	3	1	2	3	2	2	3	2	2	4	2	2	3	2	2	3	2
	Custom Size	20.517 - 23.516	3	2	1	3	2	1	3	3	2	3	3	2	3	3	3	3	3	3	3	3	3
	Standard Proview	17.517 - 20.516	3	2	1	3	2	1	3	3	2	3	3	2	3	3	3	3	3	3	3	3	3
	Custom Size	14.517 - 17.516	3	2	1	3	2	1	3	2	2	3	2	2	3	2	3	3	3	3	3	2	3
	Custom Size	12.517 - 14.516	3	2	1	3	2	1	3	2	2	3	2	2	3	2	3	3	2	3	3	2	3
	Shortest	11.377 - 12.516	3	2	1	3	2	1	3	2	2	3	2	2	3	2	2	3	2	3	3	2	3
62	Tallest	36.517 - 41.644	2	4	1	2	4	1	2	4	2	2	4	2	2	4	2	2	5	2	2	4	2
	Standard Cottage	31.517 - 36.516	3	3	1	3	3	1	3	4	2	3	4	2	3	4	2	3	4	2	3	4	2
	Equal-lite	26.517 - 31.516	3	3	1	3	3	1	3	4	2	3	4	2	3	4	3	3	3	3	3	3	3
	Standard Proview	23.517 - 26.516	3	3	1	3	3	1	3	3	2	3	3	2	3	3	2	3	3	3	3	3	3
	Custom Size	20.517 - 23.516	3	2	1	3	2	1	3	2	2	3	2	2	3	3	2	3	3	3	3	3	3
	Custom Size	17.517 - 20.516	3	2	1	3	2	1	3	2	2	3	2	2	3	2	2	3	2	3	3	2	3
	Custom Size	14.517 - 17.516	4	2	1	4	2	1	4	2	2	4	2	2	4	2	2	4	2	2	4	2	3
	Custom Size	13.017 - 14.516	4	2	1	4	2	1	4	2	2	4	2	2	4	2	2	4	2	2	4	2	3
	Shortest	11.864 - 13.016	4	2	1	4	2	1	4	2	2	4	2	2	4	2	2	4	2	2	4	2	3
75	Tallest	39.517 - 41.644	3	4	1	3	4	1	3	4	2	3	4	2	3	4	2	3	4	2	3	4	2
	Custom Size	38.517 - 39.516	3	4	1	3	4	1	3	4	2	3	4	2	3	4	2	3	4	2	3	4	2
	Equal-lite	35.517 - 38.516	3	3	1	3	3	1	3	4	2	3	4	2	3	4	2	3	4	3	3	4	3
	Custom Size	32.517 - 35.516	3	3	1	3	3	1	3	3	2	3	3	2	3	4	2	3	4	3	3	4	3
	Standard Proview	29.517 - 32.516	3	3	1	3	3	1	3	3	2	3	3	2	3	3	2	3	3	3	3	3	3
	Custom Size	26.517 - 29.516	4	3	1	4	3	1	4	3	2	4	3	2	4	3	2	4	3	2	4	3	3
	Shortest	25.516 - 26.516	4	3	1	4	3	1	4	3	2	4	3	2	4	3	2	4	3	2	4	3	3
84	Equal-lite	38.517 - 41.644	3	4	1	3	4	1	3	4	2	3	4	2	3	4	2	3	4	3	3	4	3
	Custom Size	35.517 - 38.516	4	3	1	4	3	1	4	3	2	4	3	2	4	3	2	4	4	2	4	4	3
	Standard Proview	33.818 - 35.516	4	3	1	4	3	1	4	3	2	4	3	2	4	3	2	4	3	2	4	3	3
91.78	Tallest	** - 41.644	4	4	1	4	4	1	4	4	2	4	4	2	4	4	2	4	4	2	4	4	3

Anchor Group B

Window Buck Height (in)	Bottom Sash Description for given Range @ Window Height Shown	Sash Height Range (in)	18" Wide Jamb Above MR	18" Wide Jamb Below MR	18" Wide Header	24" Wide Jamb Above MR	24" Wide Jamb Below MR	24" Wide Header	32" Wide Jamb Above MR	32" Wide Jamb Below MR	32" Wide Header	36" Wide Jamb Above MR	36" Wide Jamb Below MR	36" Wide Header	40" Wide Jamb Above MR	40" Wide Jamb Below MR	40" Wide Header	48" Wide Jamb Above MR	48" Wide Jamb Below MR	48" Wide Header	52-1/8" Wide Jamb Above MR	52-1/8" Wide Jamb Below MR	52-1/8" Wide Header
23.5	Equal-lite	11.394	1	2	1	1	2	1	1	2	2	1	2	2	1	2	2	1	2	2	1	2	2
28	Standard Cottage	14.517 - 15.870	1	2	1	1	2	1	1	2	2	1	2	2	1	2	2	1	2	2	1	2	2
	Equal-lite	11.583 - 14.516	1	2	1	1	2	1	1	2	2	1	2	2	1	2	2	1	2	2	1	2	2
	Standard Proview	11.377 - 11.582	2	2	1	2	2	1	2	2	2	2	2	2	2	2	2	2	2	2	2	2	2
37.375	Tallest	23.517 - 25.286	1	2	1	1	2	1	1	2	2	1	2	2	1	3	2	1	3	2	1	3	2
	Standard Cottage	20.958 - 23.516	1	2	1	1	2	1	1	2	2	1	2	2	1	2	2	1	3	2	1	3	2
	Equal-lite	17.517 - 20.957	2	2	1	2	2	1	2	2	2	2	2	2	2	2	2	2	2	2	2	2	2
	Standard Proview	14.517 - 17.516	2	2	1	2	2	1	2	2	2	2	2	2	2	2	2	2	2	2	2	2	2
	Shortest	11.377 - 14.516	2	2	1	2	2	1	2	2	2	2	2	2	2	2	2	2	2	2	2	2	2
44	Tallest	27.583 - 31.911	1	3	1	1	3	1	1	3	2	1	3	2	1	3	2	1	3	2	1	3	2
	Custom Size	26.517 - 27.582	2	3	1	2	3	1	2	3	2	2	3	2	2	3	2	2	3	2	2	3	2
	Standard Cottage	23.517 - 26.516	2	3	1	2	3	1	2	3	2	2	3	2	2	3	2	2	3	2	2	3	2
	Equal-lite	20.517 - 23.516	2	2	1	2	2	1	2	2	2	2	2	2	2	2	2	2	2	2	2	2	2
	Standard Proview	17.517 - 20.516	2	2	1	2	2	1	2	2	2	2	2	2	2	2	2	2	2	2	2	2	2
	Custom Size	14.517 - 17.516	3	2	1	3	2	1	3	2	2	3	2	2	3	2	2	3	2	2	3	2	2
	Shortest	11.377 - 14.516	3	2	1	3	2	1	3	2	2	3	2	2	3	2	2	3	2	2	3	2	2
48	Tallest	31.583 - 35.911	1	3	1	1	3	1	1	3	2	1	3	2	1	3	2	1	3	2	1	3	2
	Standard Cottage	26.517 - 31.582	2	3	1	2	3	1	2	3	2	2	3	2	2	3	2	2	3	2	2	3	2
	Equal-lite	20.517 - 26.516	2	3	1	2	3	1	2	3	2	2	3	2	2	3	2	2	3	2	2	3	2
	Standard Proview	17.517 - 20.516	3	2	1	3	2	1	3	2	2	3	2	2	3	2	2	3	2	2	3	2	2
	Custom Size	14.517 - 17.516	3	2	1	3	2	1	3	2	2	3	2	2	3	2	2	3	2	2	3	2	2
	Custom Size	12.517 - 14.516	3	2	1	3	2	1	3	2	2	3	2	2	3	2	2	3	2	2	3	2	2
	Shortest	11.377 - 12.516	3	2	1	3	2	1	3	2	2	3	2	2	3	2	2	3	2	2	3	2	2
49.625	Tallest	33.208 - 37.536	1	3	1	1	3	1	1	3	2	1	3	2	1	3	2	1	3	2	1	3	2
	Standard Cottage	26.517 - 33.207	2	3	1	2	3	1	2	3	2	2	3	2	2	3	2	2	3	2	2	3	2
	Equal-lite	23.517 - 26.516	2	3	1	2	3	1	2	3	2	2	3	2	2	3	2	2	3	2	2	3	2
	Custom Size	20.517 - 23.516	3	2	1	3	2	1	3	2	2	3	2	2	3	2	2	3	2	2	3	2	2
	Standard Proview	17.517 - 20.516	3	2	1	3	2	1	3	2	2	3	2	2	3	2	2	3	2	2	3	2	2
	Custom Size	14.517 - 17.516	3	2	1	3	2	1	3	2	2	3	2	2	3	2	2	3	2	2	3	2	2
	Custom Size	12.517 - 14.516	3	2	1	3	2	1	3	2	2	3	2	2	3	2	2	3	2	2	3	2	2
	Shortest	11.377 - 12.516	3	2	1	3	2	1	3	2	2	3	2	2	3	2	2	3	2	2	3	2	2
62	Tallest	36.517 - 41.644	2	4	1	2	4	1	2	4	2	2	4	2	2	4	2	2	4	2	2	4	2
	Standard Cottage	31.517 - 36.516	3	3	1	3	3	1	3	3	2	3	3	2	3	3	2	3	3	2	3	3	2
	Equal-lite	26.517 - 31.516	3	3	1	3	3	1	3	3	2	3	3	2	3	3	2	3	3	2	3	3	2
	Standard Proview	23.517 - 26.516	3	3	1	3	3	1	3	3	2	3	3	2	3	3	2	3	3	2	3	3	2
	Custom Size	20.517 - 23.516	3	2	1	3	2	1	3	2	2	3	2	2	3	2	2	3	2	2	3	2	2
	Custom Size	17.517 - 20.516	3	2	1	3	2	1	3	2	2	3	2	2	3	2	2	3	2	2	3	2	2
	Custom Size	14.517 - 17.516	4	2	1	4	2	1	4	2	2	4	2	2	4	2	2	4	2	2	4	2	2
	Custom Size	13.017 - 14.516	4	2	1	4	2	1	4	2	2	4	2	2	4	2	2	4	2	2	4	2	2
	Shortest	11.864 - 13.016	4	2	1	4	2	1	4	2	2	4	2	2	4	2	2	4	2	2	4	2	2
75	Tallest	39.517 - 41.644	3	4	1	3	4	1	3	4	2	3	4	2	3	4	2	3	4	2	3	4	2
	Custom Size	38.517 - 39.516	3	4	1	3	4	1	3	4	2	3	4	2	3	4	2	3	4	2	3	4	2
	Equal-lite	35.517 - 38.516	3	3	1	3	3	1	3	3	2	3	3	2	3	3	2	3	3	2	3	3	2
	Custom Size	32.517 - 35.516	3	3	1	3	3	1	3	3	2	3	3	2	3	3	2	3	3	2	3	3	2
	Standard Proview	29.517 - 32.516	3	3	1	3	3	1	3	3	2	3	3	2	3	3	2	3	3	2	3	3	2
	Custom Size	26.517 - 29.516	4	3	1	4	3	1	4	3	2	4	3	2	4	3	2	4	3	2	4	3	2
	Shortest	25.516 - 26.516	4	3	1	4	3	1	4	3	2	4	3	2	4	3	2	4	3	2	4	3	2
84	Equal-lite	38.517 - 41.644	3	4	1	3	4	1	3	4	2	3	4	2	3	4	2	3	4	2	3	4	2
	Custom Size	35.517 - 38.516	4	3	1	4	3	1	4	3	2	4	3	2	4	3	2	4	3	2	4	3	2
	Standard Proview	33.818 - 35.516	4	3	1	4	3	1	4	3	2	4	3	2	4	3	2	4	3	2	4	3	2
91.78	Tallest	** - 41.644	4	4	1	4	4	1	4	4	2	4	4	2	4	4	2	4	4	2	4	4	2

Anchor Group C

Window Buck Height (in)	Bottom Sash Description for given Range @ Window Height Shown	Sash Height Range (in)	18" Wide Jamb Above MR	18" Wide Jamb Below MR	18" Wide Header	24" Wide Jamb Above MR	24" Wide Jamb Below MR	24" Wide Header	32" Wide Jamb Above MR	32" Wide Jamb Below MR	32" Wide Header	36" Wide Jamb Above MR	36" Wide Jamb Below MR	36" Wide Header	40" Wide Jamb Above MR	40" Wide Jamb Below MR	40" Wide Header	48" Wide Jamb Above MR	48" Wide Jamb Below MR	48" Wide Header	52-1/8" Wide Jamb Above MR	52-1/8" Wide Jamb Below MR	52-1/8" Wide Header
23.5	Equal-lite	11.394	1	2	1	1	2	1	1	2	2	1	2	2	1	2	2	1	2	2	1	2	2
28	Standard Cottage	14.517 - 15.870	1	2	1	1	2	1	1	2	2	1	2	2	1	2	2	1	2	2	1	2	2
	Equal-lite	11.583 - 14.516	1	2	1	1	2	1	1	2	2	1	2	2	1	2	2	2	2	2	2	2	2
	Standard Proview	11.377 - 11.582	2	2	1	2	2	1	2	2	2	2	2	2	2	2	2	2	2	2	2	2	2
37.375	Tallest	23.517 - 25.286	1	2	1	1	2	1	1	2	2	1	3	2	1	3	2	1	3	2	1	3	2
	Standard Cottage	20.958 - 23.516	1	2	1	1	2	1	1	2	2	1	3	2	1	3	2	1	3	2	1	3	2
	Equal-lite	17.517 - 20.957	2	2	1	2	2	1	2	2	2	2	2	2	2	3	2	2	3	2	2	3	2
	Standard Proview	14.517 - 17.516	2	2	1	2	2	1	2	2	2	2	2	2	2	2	2	2	2	2	2	2	2
	Shortest	11.377 - 14.516	2	2	1	2	2	1	2	2	2	2	2	2	2	2	2	2	2	2	2	2	2
44	Tallest	27.583 - 31.911	1	3	1	1	3	1	1	3	2	1	3	2	1	3	2	1	3	2	1	3	2
	Custom Size	26.517 - 27.582	2	3	1	2	3	1	2	3	2	2	3	2	2	3	2	2	3	2	2	3	2
	Standard Cottage	23.517 - 26.516	2	3	1	2	3	1	2	3	2	2	3	2	2	3	2	2	3	2	2	3	2
	Equal-lite	20.517 - 23.516	2	2	1	2	2	1	2	2	2	2	3	2	2	3	2	2	3	2	2	3	2
	Standard Proview	17.517 - 20.516	2	2	1	2	2	1	2	2	2	2	2	2	2	2	2	2	2	2	2	2	2
	Custom Size	14.517 - 17.516	3	2	1	3	2	1	3	2	2	3	2	2	3	2	2	3	2	2	3	2	2
	Shortest	11.377 - 14.516	3	2	1	3	2	1	3	2	2	3	2	2	3	2	2	3	2	2	3	2	2
48	Tallest	31.583 - 35.911	1	3	1	1	3	1	1	3	2	1	3	2	1	4	2	1	4	2	1	4	2
	Standard Cottage	26.517 - 31.582	2	3	1	2	3	1	2	3	2	2	3	2	2	3	2	2	3	2	2	3	2
	Equal-lite	20.517 - 26.516	2	3	1	2	3	1	2	3	2	2	3	2	2	3	2	2	3	2	2	3	2
	Standard Proview	17.517 - 20.516	3	2	1	3	2	1	3	2	2	3	2	2	3	2	2	3	2	2	3	2	2
	Custom Size	14.517 - 17.516	3	2	1	3	2	1	3	2	2	3	2	2	3	2	2	3	2	2	3	2	2
	Custom Size	12.517 - 14.516	3	2	1	3	2	1	3	2	2	3	2	2	3	2	2	3	2	2	3	2	2
	Shortest	11.377 - 12.516	3	2	1	3	2	1	3	2	2	3	2	2	3	2	2	3	2	2	3	2	2
49.625	Tallest	33.208 - 37.536	1	3	1	1	3	1	1	3	2	1	3	2	1	3	2	1	4	2	1	4	2
	Standard Cottage	26.517 - 33.207	2	3	1	2	3	1	2	3	2	2	3	2	2	3	2	2	3	2	2	3	2
	Equal-lite	23.517 - 26.516	2	3	1	2	3	1	2	3	2	2	3	2	2	3	2	2	3	2	2	3	2
	Custom Size	20.517 - 23.516	3	2	1	3	2	1	3	2	2	3	3	2	3	3	2	3	2	2	3	2	2
	Standard Proview	17.517 - 20.516	3	2	1	3	2	1	3	2	2	3	2	2	3	2	2	3	2	2	3	2	2
	Custom Size	14.517 - 17.516	3	2	1	3	2	1	3	2	2	3	2	2	3	2	2	3	2	2	3	2	2
	Custom Size	12.517 - 14.516	3	2	1	3	2	1	3	2	2	3	2	2	3	2	2	3	2	2	3	2	2
	Shortest	11.377 - 12.516	3	2	1	3	2	1	3	2	2	3	2	2	3	2	2	3	2	2	3	2	2
62	Tallest	36.517 - 41.644	2	4	1	2	4	1	2	4	2	2	4	2	2	4	2	2	4	2	2	4	2
	Standard Cottage	31.517 - 36.516	3	3	1	3	3	1	3	3	2	3	3	2	3	3	2	3	3	2	3	3	2
	Equal-lite	26.517 - 31.516	3	3	1	3	3	1	3	3	2	3	3	2	3	3	2	3	3	2	3	3	2
	Standard Proview	23.517 - 26.516	3	3	1	3	3	1	3	3	2	3	3	2	3	3	2	3	3	2	3	3	2
	Custom Size	20.517 - 23.516	3	2	1	3	2	1	3	2	2	3	2	2	3	2	2	3	2	2	3	2	2
	Custom Size	17.517 - 20.516	3	2	1	3	2	1	3	2	2	3	2	2	3	2	2	3	2	2	3	2	2
	Custom Size	14.517 - 17.516	4	2	1	4	2	1	4	2	2	4	2	2	4	2	2	4	2	2	4	2	2
	Custom Size	13.017 - 14.516	4	2	1	4	2	1	4	2	2	4	2	2	4	2	2	4	2	2	4	2	2
	Shortest	11.864 - 13.016	4	2	1	4	2	1	4	2	2	4	2	2	4	2	2	4	2	2	4	2	2
75	Tallest	39.517 - 41.644	3	4	1	3	4	1	3	4	2	3	4	2	3	4	2	3	4	2	3	4	2
	Custom Size	38.517 - 39.516	3	4	1	3	4	1	3	4	2	3	4	2	3	4	2	3	4	2	3	4	2
	Equal-lite	35.517 - 38.516	3	3	1	3	3	1	3	3	2	3	3	2	3	3	2	3	3	2	3	3	2
	Custom Size	32.517 - 35.516	3	3	1	3	3	1	3	3	2	3	3	2	3	3	2	3	3	2	3	3	2
	Standard Proview	29.517 - 32.516	3	3	1	3	3	1	3	3	2	3	3	2	3	3	2	3	3	2	3	3	2
	Custom Size	26.517 - 29.516	4	3	1	4	3	1	4	3	2	4	3	2	4	3	2	4	3	2	4	3	2
	Shortest	25.516 - 26.516	4	3	1	4	3	1	4	3	2	4	3	2	4	3	2	4	3	2	4	3	2
84	Equal-lite	38.517 - 41.644	3	4	1	3	4	1	3	4	2	3	4	2	3	4	2	3	4	2	3	4	2
	Custom Size	35.517 - 38.516	4	3	1	4	3	1	4	3	2	4	3	2	4	3	2	4	3	2	4	3	2
	Standard Proview	33.818 - 35.516	4	3	1	4	3	1	4	3	2	4	3	2	4	3	2	4	3	2	4	3	2
91.78	Tallest	** - 41.644	4	4	1	4	4	1	4	4	2	4	4	2	4	4	2	4	4	2	4	4	2

SEE TABLE 4, SHEET 6 FOR DESIGN PRESSURES WHEN USING THIS TABLE.

** MIN. SASH HEIGHT = WINDOW BUCK HEIGHT - 50.136

Max. Anchor O.C. Spacing for "Integral-Fin" Installation	Anchor Group E	Anchor Group F
	2.7"	4"

NOTES:

1) USE THE ABOVE *"ANCHOR QUANTITIES REQUIRED.........."* TABLE FOR ANCHORS INSTALLED THROUGH THE FRAME.

2) USE THE ABOVE *"MAX. ANCHOR O.C. SPACING.........."* TABLE FOR ANCHORS INSTALLED THROUGH THE INTEGRAL FIN.

3) FRAME DIMENSIONS ARE BUCK. "MR" = MEETING RAIL.

4) FOR SIZES NOT SHOWN, ROUND UP TO THE NEXT AVAILABLE WIDTH OR HEIGHT DIMENSION SHOWN ON THE TABLE.

5) REFER TO TABLES 2 & 3, SHEET 2 FOR ANCHOR GROUP DESCRIPTIONS.

PRODUCT REVISED
as complying with the Florida
Building Code
Acceptance No 16-0714.04
Expiration Date July 30, 2020
By Manuel Perez
Miami Dade Product Control

No. 58705
6/14/16
A. LYNN MILLER, P.E.
P.E.# 58705

PGT®
1070 TECHNOLOGY DRIVE
N. VENICE, FL 34275
(941)-480-1600
CERT. OF AUTH. #29296

Revised By:	Date:	Revision:
Revised By:	Date:	Revision:

Description: ANCHOR QUANTITY TABLE

Drawn By: J ROSOWSKI

Title: SINGLE HUNG WINDOW INSTALLATION - NI

Date: 05/15/15

Series/Model:	Scale:	Sheet:	Drawing No.	Rev:
SH-5400	NTS	8 OF 12	MD-SH5400-01	A

TABLE 7:

Anchor Quantities Required for "Through-Frame" Installation (Glass Types 2, 3 & 4, Reinf. Level R2)

Anchor Group B

Window Buck Height (in)	Bottom Sash Description for given Range @ Window Height Shown	Sash Height Range (in)	18" Wide Jamb Above MR	18" Wide Jamb Below MR	18" Wide Header	24" Wide Jamb Above MR	24" Wide Jamb Below MR	24" Wide Header	32" Wide Jamb Above MR	32" Wide Jamb Below MR	32" Wide Header	36" Wide Jamb Above MR	36" Wide Jamb Below MR	36" Wide Header	40" Wide Jamb Above MR	40" Wide Jamb Below MR	40" Wide Header	48" Wide Jamb Above MR	48" Wide Jamb Below MR	48" Wide Header	52-1/8" Wide Jamb Above MR	52-1/8" Wide Jamb Below MR	52-1/8" Wide Header
23.5	Equal-lite	11.394	1	2	1	1	2	1	1	2	2	1	2	2	1	2	2	1	2	2	1	2	2
28	Standard Cottage	14.517 - 15.870	1	2	1	1	2	1	1	2	2	1	2	2	1	2	2	1	3	2	1	3	2
	Equal-lite	11.583 - 14.516	1	2	1	1	2	1	1	2	2	1	2	2	1	2	2	2	2	2	2	3	2
	Standard Proview	11.377 - 11.582	2	2	1	2	2	1	2	2	2	2	2	2	2	2	2	2	2	2	2	2	2
37.375	Tallest	23.517 - 25.286	1	2	1	1	2	1	1	3	2	1	3	2	1	3	2	1	4	2	1	4	2
	Standard Cottage	20.958 - 23.516	1	2	1	1	2	1	1	3	2	1	3	2	1	3	2	2	3	2	2	3	2
	Equal-lite	17.517 - 20.957	2	2	1	2	2	1	2	2	2	2	3	2	2	3	2	2	3	2	2	3	2
	Standard Proview	14.517 - 17.516	2	2	1	2	2	1	2	2	2	2	2	2	2	2	2	2	3	3	2	3	3
	Shortest	11.377 - 14.516	2	2	1	2	2	1	2	2	2	2	2	2	2	2	2	2	2	3	2	2	3
44	Tallest	27.583 - 31.911	1	3	1	1	3	1	1	3	2	1	4	2	1	4	2	1	4	2	1	4	2
	Custom Size	26.517 - 27.582	2	3	1	2	3	1	2	3	2	2	3	2	2	3	2	2	4	2	2	4	2
	Standard Cottage	23.517 - 26.516	2	3	1	2	3	1	2	3	2	2	3	2	2	3	2	2	3	2	2	3	2
	Equal-lite	20.517 - 23.516	2	2	1	2	2	1	2	3	2	2	3	2	2	3	2	2	3	2	2	3	2
	Standard Proview	17.517 - 20.516	2	2	1	2	2	1	2	2	2	2	3	2	2	3	2	2	3	2	2	3	3
	Custom Size	14.517 - 17.516	3	2	1	3	2	1	3	2	2	3	2	2	3	2	2	3	2	3	3	2	3
	Shortest	11.377 - 14.516	3	2	1	3	2	1	3	2	2	3	2	2	3	2	3	3	2	3	3	2	3
48	Tallest	31.583 - 35.911	1	3	1	1	3	1	1	4	2	1	4	2	1	4	2	1	4	2	1	4	2
	Standard Cottage	26.517 - 31.582	2	3	1	2	3	1	2	3	2	2	4	2	2	4	2	2	4	2	2	4	2
	Equal-lite	20.517 - 26.516	2	3	1	2	3	1	2	3	2	2	3	2	2	3	2	2	3	2	2	3	2
	Standard Proview	17.517 - 20.516	3	2	1	3	2	1	3	2	2	3	3	2	3	3	2	3	3	3	3	3	3
	Custom Size	14.517 - 17.516	3	2	1	3	2	1	3	2	2	3	2	2	3	2	3	3	2	3	3	2	3
	Custom Size	12.517 - 14.516	3	2	1	3	2	1	3	2	2	3	2	2	3	2	3	3	2	3	3	2	3
	Shortest	11.377 - 12.516	3	2	1	3	2	1	3	2	2	3	2	2	3	2	3	3	2	3	3	2	3
49.625	Tallest	33.208 - 37.536	1	3	1	1	3	1	1	3	2	1	4	2	1	4	2	1	4	2	1	4	2
	Standard Cottage	26.517 - 33.207	2	3	1	2	3	1	2	3	2	2	4	2	2	4	2	2	4	2	2	4	2
	Equal-lite	23.517 - 26.516	2	3	1	2	3	1	2	3	2	2	3	2	2	3	2	2	3	2	2	3	2
	Custom Size	20.517 - 23.516	3	2	1	3	2	1	3	3	2	3	3	2	3	3	2	3	3	2	3	3	2
	Standard Proview	17.517 - 20.516	3	2	1	3	2	1	3	2	2	3	3	2	3	3	2	3	3	3	3	3	3
	Custom Size	14.517 - 17.516	3	2	1	3	2	1	3	2	2	3	2	2	3	2	3	3	2	3	3	2	3
	Custom Size	12.517 - 14.516	3	2	1	3	2	1	3	2	2	3	2	2	3	2	3	3	2	3	3	2	3
	Shortest	11.377 - 12.516	3	2	1	3	2	1	3	2	2	3	2	2	3	2	2	3	2	3	3	2	3
62	Tallest	36.517 - 41.644	2	4	1	2	4	1	2	4	2	2	4	2	2	4	2	2	4	2	2	4	2
	Standard Cottage	31.517 - 36.516	3	3	1	3	3	1	3	3	2	3	4	2	3	4	2	3	4	2	3	4	2
	Equal-lite	26.517 - 31.516	3	3	1	3	3	1	3	3	2	3	4	2	3	4	2	3	3	2	3	3	2
	Standard Proview	23.517 - 26.516	3	3	1	3	3	1	3	3	2	3	3	2	3	3	2	3	3	3	3	3	3
	Custom Size	20.517 - 23.516	3	2	1	3	2	1	3	2	2	3	2	2	3	3	2	3	3	3	3	3	3
	Custom Size	17.517 - 20.516	3	2	1	3	2	1	3	2	2	3	2	2	3	2	2	3	2	3	3	2	3
	Custom Size	14.517 - 17.516	4	2	1	4	2	1	4	2	2	4	2	2	4	2	2	4	2	2	4	2	3
	Custom Size	13.017 - 14.516	4	2	1	4	2	1	4	2	2	4	2	2	4	2	2	4	2	2	4	2	3
	Shortest	11.864 - 13.016	4	2	1	4	2	1	4	2	2	4	2	2	4	2	2	4	2	2	4	2	2
75	Tallest	39.517 - 41.644	3	4	1	3	4	1	3	4	2	3	4	2	3	4	2	3	4	2	3	4	2
	Custom Size	38.517 - 39.516	3	4	1	3	4	1	3	4	2	3	4	2	3	4	2	3	4	2	3	4	2
	Equal-lite	35.517 - 38.516	3	3	1	3	3	1	3	3	2	3	4	2	3	4	2	3	4	2	3	4	2
	Custom Size	32.517 - 35.516	3	3	1	3	3	1	3	3	2	3	3	2	3	3	2	3	3	2	3	3	2
	Standard Proview	29.517 - 32.516	3	3	1	3	3	1	3	3	2	3	3	2	3	3	2	3	3	2	3	3	2
	Custom Size	26.517 - 29.516	4	3	1	4	3	1	4	3	2	4	3	2	4	3	2	4	3	2	4	3	3
	Shortest	25.516 - 26.516	4	3	1	4	3	1	4	3	2	4	3	2	4	3	2	4	3	2	4	3	2
84	Equal-lite	38.517 - 41.644	3	4	1	3	4	1	3	4	2	3	4	2	3	4	2	3	4	2	3	4	2
	Custom Size	35.517 - 38.516	4	3	1	4	3	1	4	3	2	4	3	2	4	3	2	4	3	2	4	3	2
	Standard Proview	33.818- 35.516	4	3	1	4	3	1	4	3	2	4	3	2	4	3	2	4	3	2	4	3	2
91.78	Tallest	** - 41.644	4	4	1	4	4	1	4	4	2	4	4	2	4	4	2	4	4	2	4	4	2

Anchor Group C

Window Buck Height (in)	Bottom Sash Description for given Range @ Window Height Shown	Sash Height Range (in)	18" Wide Jamb Above MR	18" Wide Jamb Below MR	18" Wide Header	24" Wide Jamb Above MR	24" Wide Jamb Below MR	24" Wide Header	32" Wide Jamb Above MR	32" Wide Jamb Below MR	32" Wide Header	36" Wide Jamb Above MR	36" Wide Jamb Below MR	36" Wide Header	40" Wide Jamb Above MR	40" Wide Jamb Below MR	40" Wide Header	48" Wide Jamb Above MR	48" Wide Jamb Below MR	48" Wide Header	52-1/8" Wide Jamb Above MR	52-1/8" Wide Jamb Below MR	52-1/8" Wide Header
23.5	Equal-lite	11.394	1	2	1	1	2	1	1	2	2	1	2	2	1	2	2	1	2	2	1	2	2
28	Standard Cottage	14.517 - 15.870	1	2	1	1	2	1	1	2	2	1	2	2	1	3	2	1	3	2	1	3	2
	Equal-lite	11.583 - 14.516	1	2	1	1	2	1	1	2	2	2	2	2	2	2	2	2	3	2	2	3	3
	Standard Proview	11.377 - 11.582	2	2	1	2	2	1	2	2	2	2	2	2	2	2	2	2	2	2	2	2	2
37.375	Tallest	23.517 - 25.286	1	2	1	1	2	1	1	3	2	1	3	2	1	4	2	1	4	2	1	4	2
	Standard Cottage	20.958 - 23.516	1	2	1	1	2	1	1	3	2	2	3	2	2	3	2	2	4	2	2	4	2
	Equal-lite	17.517 - 20.957	2	2	1	2	2	1	2	3	2	2	3	2	2	3	2	2	3	3	2	3	3
	Standard Proview	14.517 - 17.516	2	2	1	2	2	1	2	2	2	2	2	2	2	3	2	2	3	3	2	3	3
	Shortest	11.377 - 14.516	2	2	1	2	2	1	2	2	2	2	2	2	2	2	3	3	2	3	3	2	3
44	Tallest	27.583 - 31.911	1	3	1	1	3	1	1	4	2	1	4	2	1	4	2	1	4	2	1	4	2
	Custom Size	26.517 - 27.582	2	3	1	2	3	1	2	3	2	2	4	2	2	4	2	2	4	2	2	4	2
	Standard Cottage	23.517 - 26.516	2	3	1	2	3	1	2	3	2	2	3	2	2	4	2	2	4	2	2	4	2
	Equal-lite	20.517 - 23.516	2	2	1	2	2	1	2	3	2	2	3	2	2	3	2	2	3	3	2	3	3
	Standard Proview	17.517 - 20.516	2	2	1	2	2	1	2	3	2	2	3	2	3	3	3	2	3	3	2	3	3
	Custom Size	14.517 - 17.516	3	2	1	3	2	1	3	2	2	3	2	2	3	3	3	3	3	3	3	3	3
	Shortest	11.377 - 14.516	3	2	1	3	2	1	3	2	2	3	2	2	3	2	3	3	2	3	3	2	3
48	Tallest	31.583 - 35.911	1	3	1	1	3	1	1	4	2	1	4	2	1	4	2	1	5	2	1	5	2
	Standard Cottage	26.517 - 31.582	2	3	1	2	3	1	2	4	2	2	4	2	2	4	2	2	4	2	2	4	2
	Equal-lite	20.517 - 26.516	2	3	1	2	3	1	2	3	2	2	3	2	3	4	3	2	4	3	2	3	3
	Standard Proview	17.517 - 20.516	3	2	1	3	2	1	3	3	2	3	3	2	3	3	3	3	3	3	3	3	3
	Custom Size	14.517 - 17.516	3	2	1	3	2	1	3	2	2	3	2	2	3	3	3	3	3	3	3	3	3
	Custom Size	12.517 - 14.516	3	2	1	3	2	1	3	2	2	3	2	2	3	2	3	3	2	3	3	2	3
	Shortest	11.377 - 12.516	3	2	1	3	2	1	3	2	2	3	2	2	4	2	3	4	2	3	3	2	3
49.625	Tallest	33.208 - 37.536	1	3	1	1	3	1	1	4	2	1	4	2	1	5	2	1	5	2	1	5	2
	Standard Cottage	26.517 - 33.207	2	3	1	2	3	1	2	4	2	2	4	2	2	5	2	2	4	2	2	4	2
	Equal-lite	23.517 - 26.516	2	3	1	2	3	1	2	3	2	2	3	2	2	4	3	2	4	3	2	4	3
	Custom Size	20.517 - 23.516	3	2	1	3	2	1	3	3	2	3	3	2	3	3	3	3	3	3	3	3	3
	Standard Proview	17.517 - 20.516	3	2	1	3	2	1	3	3	2	3	3	2	3	3	3	3	3	3	3	3	3
	Custom Size	14.517 - 17.516	3	2	1	3	2	1	3	2	2	3	2	2	3	3	3	3	3	3	3	3	3
	Custom Size	12.517 - 14.516	3	2	1	3	2	1	3	2	2	3	2	2	4	2	3	4	2	3	3	2	3
	Shortest	11.377 - 12.516	3	2	1	3	2	1	3	2	2	3	2	2	4	2	3	4	2	3	4	2	3
62	Tallest	36.517 - 41.644	2	4	1	2	4	1	2	4	2	2	4	2	2	4	2	2	5	2	2	5	2
	Standard Cottage	31.517 - 36.516	3	3	1	3	3	1	3	4	2	3	4	2	3	5	3	3	4	3	3	4	3
	Equal-lite	26.517 - 31.516	3	3	1	3	3	1	3	4	2	3	4	2	3	4	3	3	4	3	3	4	3
	Standard Proview	23.517 - 26.516	3	3	1	3	3	1	3	3	2	3	3	2	4	4	3	3	3	3	3	3	3
	Custom Size	20.517 - 23.516	3	2	1	3	2	1	3	2	2	3	3	2	3	3	2	3	3	3	3	3	3
	Custom Size	17.517 - 20.516	3	2	1	3	2	1	3	2	2	3	2	2	3	2	2	4	3	3	4	3	3
	Custom Size	14.517 - 17.516	4	2	1	4	2	1	4	2	2	4	2	2	4	2	2	4	2	3	4	2	3
	Custom Size	13.017 - 14.516	4	2	1	4	2	1	4	2	2	4	2	2	4	2	2	4	2	2	4	2	3
	Shortest	11.864 - 13.016	4	2	1	4	2	1	4	2	2	4	2	2	4	2	2	4	2	2	4	2	3
75	Tallest	39.517 - 41.644	3	4	1	3	4	1	3	4	2	3	4	2	3	4	2	3	5	3	3	4	3
	Custom Size	38.517 - 39.516	3	4	1	3	4	1	3	4	2	3	4	2	3	4	2	3	4	3	3	4	3
	Equal-lite	35.517 - 38.516	3	3	1	3	3	1	3	4	2	3	4	2	3	4	2	3	4	3	3	4	3
	Custom Size	32.517 - 35.516	3	3	1	3	3	1	3	3	2	3	4	2	3	4	2	3	4	3	3	4	3
	Standard Proview	29.517 - 32.516	3	3	1	3	3	1	3	3	2	3	3	2	3	3	2	4	4	3	3	3	3
	Custom Size	26.517 - 29.516	4	3	1	4	3	1	4	3	2	4	3	2	4	3	2	4	3	2	4	3	3
	Shortest	25.516 - 26.516	4	3	1	4	3	1	4	3	2	4	3	2	4	3	2	4	3	2	4	3	3
84	Equal-lite	38.517 - 41.644	3	4	1	3	4	1	3	4	2	3	4	2	3	4	2	3	4	3	3	4	3
	Custom Size	35.517 - 38.516	4	3	1	4	3	1	4	3	2	4	3	2	4	3	2	4	4	2	4	4	3
	Standard Proview	33.818- 35.516	4	3	1	4	3	1	4	3	2	4	3	2	4	3	2	4	3	2	4	4	3
91.78	Tallest	** - 41.644	4	4	1	4	4	1	4	4	2	4	4	2	4	4	2	4	4	2	4	4	3

Anchor Group D

Window Buck Height (in)	Bottom Sash Description for given Range @ Window Height Shown	Sash Height Range (in)	18" Wide Jamb Above MR	18" Wide Jamb Below MR	18" Wide Header	24" Wide Jamb Above MR	24" Wide Jamb Below MR	24" Wide Header	32" Wide Jamb Above MR	32" Wide Jamb Below MR	32" Wide Header	36" Wide Jamb Above MR	36" Wide Jamb Below MR	36" Wide Header	40" Wide Jamb Above MR	40" Wide Jamb Below MR	40" Wide Header	48" Wide Jamb Above MR	48" Wide Jamb Below MR	48" Wide Header	52-1/8" Wide Jamb Above MR	52-1/8" Wide Jamb Below MR	52-1/8" Wide Header
23.5	Equal-lite	11.394	1	2	1	1	2	1	1	2	2	1	2	2	1	2	2	1	2	2	1	2	2
28	Standard Cottage	14.517 - 15.870	1	2	1	1	2	1	1	2	2	1	2	2	1	2	2	1	2	2	1	2	2
	Equal-lite	11.583 - 14.516	1	2	1	1	2	1	1	2	2	1	2	2	1	2	2	1	2	2	1	2	2
	Standard Proview	11.377 - 11.582	2	2	1	2	2	1	2	2	2	2	2	2	2	2	2	2	2	2	2	2	2
37.375	Tallest	23.517 - 25.286	1	2	1	1	2	1	1	2	2	1	3	2	1	3	2	1	3	2	1	3	2
	Standard Cottage	20.958 - 23.516	1	2	1	1	2	1	1	2	2	1	2	2	1	3	2	1	3	2	1	3	2
	Equal-lite	17.517 - 20.957	2	2	1	2	2	1	2	2	2	2	2	2	2	2	2	2	3	2	2	3	2
	Standard Proview	14.517 - 17.516	2	2	1	2	2	1	2	2	2	2	2	2	2	2	2	2	2	2	2	2	2
	Shortest	11.377 - 14.516	2	2	1	2	2	1	2	2	2	2	2	2	2	2	2	2	2	2	2	2	2
44	Tallest	27.583 - 31.911	1	3	1	1	3	1	1	3	2	1	3	2	1	3	2	1	3	2	1	3	2
	Custom Size	26.517 - 27.582	2	3	1	2	3	1	2	3	2	2	3	2	2	3	2	2	3	2	2	3	2
	Standard Cottage	23.517 - 26.516	2	3	1	2	3	1	2	3	2	2	3	2	2	3	2	2	3	2	2	3	2
	Equal-lite	20.517 - 23.516	2	2	1	2	2	1	2	2	2	2	2	2	2	3	2	2	3	2	2	3	2
	Standard Proview	17.517 - 20.516	2	2	1	2	2	1	2	2	2	2	2	2	2	2	2	2	2	2	2	2	2
	Custom Size	14.517 - 17.516	3	2	1	3	2	1	3	2	2	3	2	2	3	2	2	3	2	2	3	2	2
	Shortest	11.377 - 14.516	3	2	1	3	2	1	3	2	2	3	2	2	3	2	2	3	2	2	3	2	2
48	Tallest	31.583 - 35.911	1	3	1	1	3	1	1	3	2	1	3	2	1	3	2	1	3	2	1	3	2
	Standard Cottage	26.517 - 31.582	2	3	1	2	3	1	2	3	2	2	3	2	2	3	2	2	3	2	2	3	2
	Equal-lite	20.517 - 26.516	2	3	1	2	3	1	2	3	2	2	3	2	2	3	2	2	3	2	2	3	2
	Standard Proview	17.517 - 20.516	3	2	1	3	2	1	3	2	2	3	2	2	3	2	2	3	2	2	3	2	2
	Custom Size	14.517 - 17.516	3	2	1	3	2	1	3	2	2	3	2	2	3	2	2	3	2	2	3	2	2
	Custom Size	12.517 - 14.516	3	2	1	3	2	1	3	2	2	3	2	2	3	2	2	3	2	2	3	2	2
	Shortest	11.377 - 12.516	3	2	1	3	2	1	3	2	2	3	2	2	3	2	2	3	2	3	3	2	3
49.625	Tallest	33.208 - 37.536	1	3	1	1	3	1	1	3	2	1	3	2	1	3	2	1	3	2	1	4	2
	Standard Cottage	26.517 - 33.207	2	3	1	2	3	1	2	3	2	2	3	2	2	3	2	2	3	2	2	3	2
	Equal-lite	23.517 - 26.516	2	3	1	2	3	1	2	3	2	2	3	2	2	3	2	2	3	2	2	3	2
	Custom Size	20.517 - 23.516	3	2	1	3	2	1	3	2	2	3	2	2	3	3	2	3	2	2	3	2	2
	Standard Proview	17.517 - 20.516	3	2	1	3	2	1	3	2	2	3	2	2	3	2	2	3	2	2	3	2	2
	Custom Size	14.517 - 17.516	3	2	1	3	2	1	3	2	2	3	2	2	3	2	2	3	2	2	3	2	2
	Custom Size	12.517 - 14.516	3	2	1	3	2	1	3	2	2	3	2	2	3	2	2	3	2	2	3	2	2
	Shortest	11.377 - 12.516	3	2	1	3	2	1	3	2	2	3	2	2	3	2	2	3	2	3	3	2	3
62	Tallest	36.517 - 41.644	2	4	1	2	4	1	2	4	2	2	4	2	2	4	2	2	4	2	2	4	2
	Standard Cottage	31.517 - 36.516	3	3	1	3	3	1	3	3	2	3	3	2	3	3	2	3	3	2	3	3	2
	Equal-lite	26.517 - 31.516	3	3	1	3	3	1	3	3	2	3	3	2	3	3	2	3	3	2	3	3	2
	Standard Proview	23.517 - 26.516	3	3	1	3	3	1	3	3	2	3	3	2	3	3	2	3	3	2	3	3	2
	Custom Size	20.517 - 23.516	3	2	1	3	2	1	3	2	2	3	2	2	3	2	2	3	2	2	3	2	2
	Custom Size	17.517 - 20.516	3	2	1	3	2	1	3	2	2	3	2	2	3	2	2	3	2	2	3	2	2
	Custom Size	14.517 - 17.516	4	2	1	4	2	1	4	2	2	4	2	2	4	2	2	4	2	2	4	2	2
	Custom Size	13.017 - 14.516	4	2	1	4	2	1	4	2	2	4	2	2	4	2	2	4	2	2	4	2	2
	Shortest	11.864 - 13.016	4	2	1	4	2	1	4	2	2	4	2	2	4	2	2	4	2	2	4	2	2
75	Tallest	39.517 - 41.644	3	4	1	3	4	1	3	4	2	3	4	2	3	4	2	3	4	2	3	4	2
	Custom Size	38.517 - 39.516	3	4	1	3	4	1	3	4	2	3	4	2	3	4	2	3	4	2	3	4	2
	Equal-lite	35.517 - 38.516	3	3	1	3	3	1	3	3	2	3	3	2	3	3	2	3	3	2	3	3	2
	Custom Size	32.517 - 35.516	3	3	1	3	3	1	3	3	2	3	3	2	3	3	2	3	3	2	3	3	2
	Standard Proview	29.517 - 32.516	3	3	1	3	3	1	3	3	2	3	3	2	3	3	2	3	3	2	3	3	2
	Custom Size	26.517 - 29.516	4	3	1	4	3	1	4	3	2	4	3	2	4	3	2	4	3	2	4	3	2
	Shortest	25.516 - 26.516	4	3	1	4	3	1	4	3	2	4	3	2	4	3	2	4	3	2	4	3	2
84	Equal-lite	38.517 - 41.644	3	4	1	3	4	1	3	4	2	3	4	2	3	4	2	3	4	2	3	4	2
	Custom Size	35.517 - 38.516	4	3	1	4	3	1	4	3	2	4	3	2	4	3	2	4	3	2	4	3	2
	Standard Proview	33.818- 35.516	4	3	1	4	3	1	4	3	2	4	3	2	4	3	2	4	3	2	4	3	2
91.78	Tallest	** - 41.644	4	4	1	4	4	1	4	4	2	4	4	2	4	4	2	4	4	2	4	4	2

SEE TABLE 5, SHEET 7 FOR DESIGN PRESSURES WHEN USING THIS TABLE.

** MIN. SASH HEIGHT = WINDOW BUCK HEIGHT - 50.136

Max. Anchor O.C. Spacing for "Integral-Fin" Installation	Anchor Group F
	3.7"

NOTES:

1) USE THE ABOVE *"ANCHOR QUANTITIES REQUIRED.........."* TABLE FOR ANCHORS INSTALLED THROUGH THE FRAME.

2) USE THE ABOVE *"MAX. ANCHOR O.C. SPACING.........."* TABLE FOR ANCHORS INSTALLED THROUGH THE INTEGRAL FIN.

3) FRAME DIMENSIONS ARE BUCK. "MR" = MEETING RAIL.

4) FOR SIZES NOT SHOWN, ROUND UP TO THE NEXT AVAILABLE WIDTH OR HEIGHT DIMENSION SHOWN ON THE TABLE.

5) REFER TO TABLES 2 & 3, SHEET 2 FOR ANCHOR GROUP DESCRIPTIONS.

PRODUCT REVISED
as complying with the Florida Building Code
Acceptance No 16-0714.04
Expiration Date July 30, 2020
By Manuel Perez
Miami Dade Product Control

A. LYNN MILLER, P.E.
P.E.# 58705
6/14/16

PGT®
1070 TECHNOLOGY DRIVE
N. VENICE, FL 34275
(941)-480-1600

CERT. OF AUTH. #29296

Revised By:	Date:	Revision:
Revised By:	Date:	Revision:

Description: ANCHOR QUANTITY TABLE

Drawn By: J ROSOWSKI

Title: SINGLE HUNG WINDOW INSTALLATION - NI

Date: 05/15/15

Series/Model:	Scale:	Sheet:	Drawing No.	Rev:
SH-5400	NTS	9 OF 12	MD-SH5400-01	A

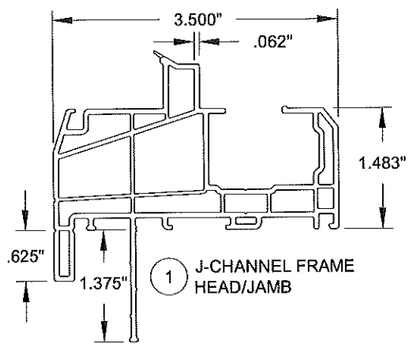

1 J-CHANNEL FRAME HEAD/JAMB

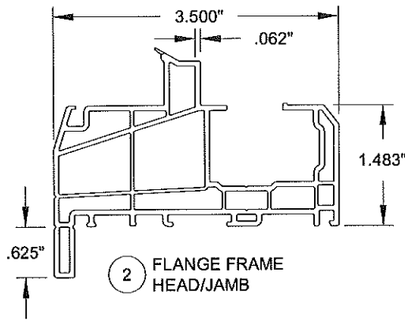

2 FLANGE FRAME HEAD/JAMB

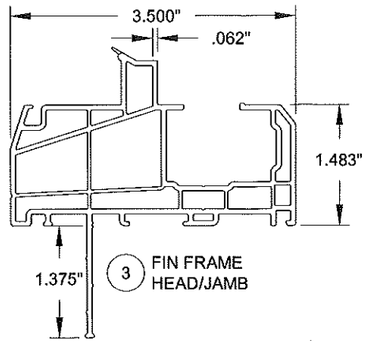

3 FIN FRAME HEAD/JAMB

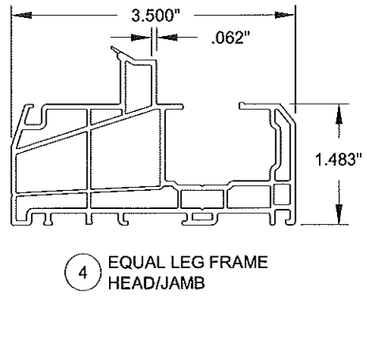

4 EQUAL LEG FRAME HEAD/JAMB

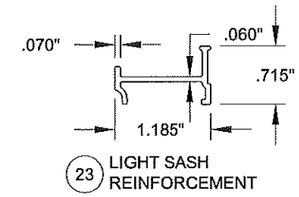

23 LIGHT SASH REINFORCEMENT

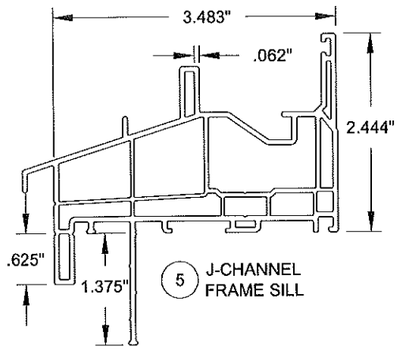

5 J-CHANNEL FRAME SILL

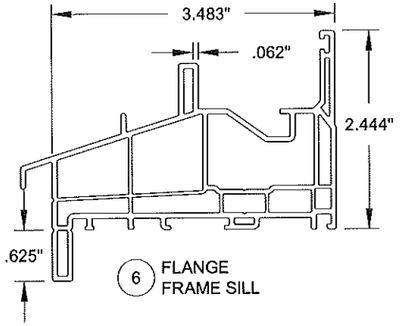

6 FLANGE FRAME SILL

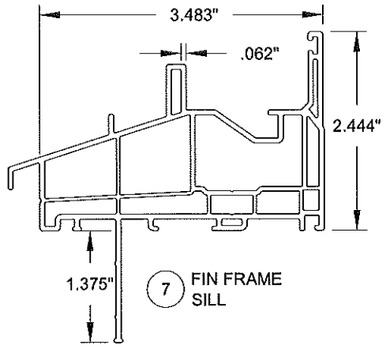

7 FIN FRAME SILL

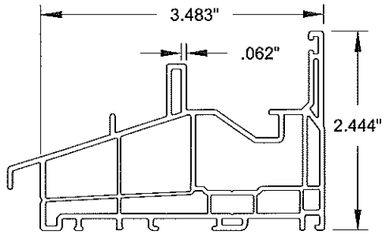

8 EQUAL LEG FRAME SILL

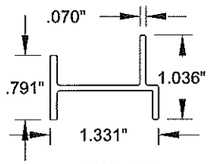

26 STANDARD MEETING RAIL REINFORCEMENT

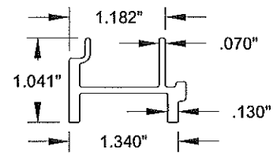

27 HD MEETING RAIL REINFORCEMENT

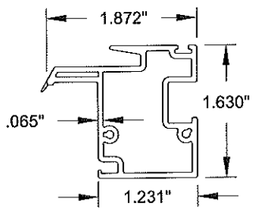

14 FIXED MEETING RAIL

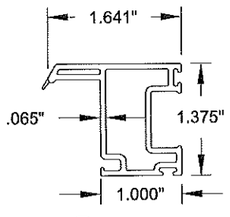

16 SASH RAIL

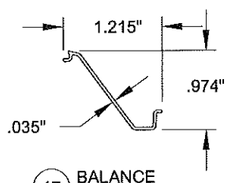

17 BALANCE COVER

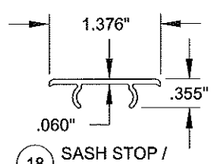

18 SASH STOP / SCREW COVER

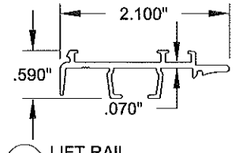

19 LIFT RAIL INTERLOCK

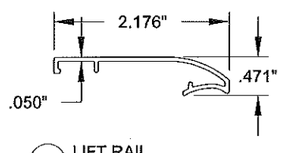

20 LIFT RAIL INTERLOCK COVER

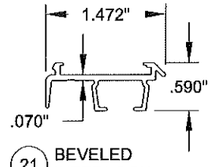

21 BEVELED INTERLOCK

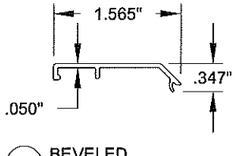

22 BEVELED INTERLOCK COVER

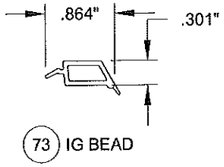

73 IG BEAD

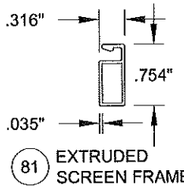

81 EXTRUDED SCREEN FRAME

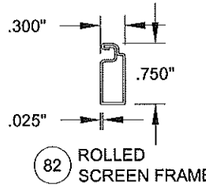

82 ROLLED SCREEN FRAME

PRODUCT REVISED
as complying with the Florida
Building Code
Acceptance No 16-0214.04
Expiration Date July 30, 2020
By Manuel Perez
Miami-Dade Product Control

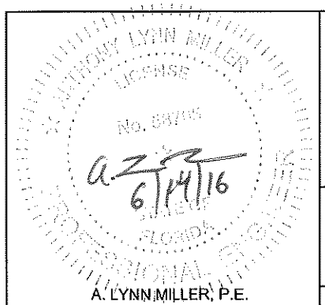

A. LYNN MILLER, P.E.
P.E.# 58705

1070 TECHNOLOGY DRIVE
N. VENICE, FL 34275
(941)–480–1600
CERT. OF AUTH. #29296

Revised By:	Date:	Revision:
Revised By:	Date:	Revision:

Description:	Drawn By:
WINDOW EXTRUSIONS	J ROSOWSKI

Title:	Date:
SINGLE HUNG WINDOW INSTALLATION - NI	05/15/15

Series/Model:	Scale:	Sheet:	Drawing No.	Rev:
SH-5400	NTS	10 OF 12	MD-SH5400-01	A

TABLE 8:

Bill of Material

#	Part #	Description	Material
1	620101	Single Hung Frame Head & Jambs - J-Channel	PVC
2	620102	Single Hung Frame Head & Jambs - Flange	PVC
3	620103	Single Hung Frame Head & Jambs - Fin	PVC
4	620104	Single Hung Frame Head & Jambs - Equal Leg/Box	PVC
5	620105	SH/DH Frame Sill - J-Channel	PVC
6	620106	SH/DH Frame Sill - Flange	PVC
7	620107	SH/DH Frame Sill - Fin	PVC
8	620108	SH/DH Frame Sill - Equal Leg/Box	PVC
14	620131	Fixed Meeting Rail	PVC
16	620129	Sash Rail (Sides, Top & Bottom)	PVC
17	620134	Balance Cover	PVC
18	620133	Sash Stop/Screw Cover	PVC
19	620156	Pull Rail Interlock	6005 T5 Al
20	620144	Pull Rail Interlock Cover	PVC
21	620157	Beveled Interlock	6005 T5 Al
22	620145	Beveled Interlock Cover	PVC
23	620150	Light Sash Reinforcement	6063 T6 Al
25	620152	HD Sash Reinforcement	6063 T6 Al
26	620153	Standard Meeting Rail Reinforcement	6005 T5 Al
27	620154	HD Meeting Rail Reinforcement	6005 T5 Al
30	61644	Weatherstrip, .187" x .270" Fin Pile	
31	6Q300	Weatherstrip, .190" x .300" Foam Bulb	Flex PVC
32	61719	Weatherstrip, .187" x .220" PolyPile	
33	61825	Weatherstrip Plug, .220" Finseal	
35	78X1MTTT	#8 x 1" Ph. PH SDS (Interlock Mounting Screw)	
36	78X3THPX	#8 x 3" Ph. PH SMS (Meeting Rail Screw)	410 SS
37	71669SP	Meeting Rail Screw Support Plate	6063 T6 Al
38	720210	Weep Hole Cover	PVC
40	720XXXXX	Constant Force Balance	
41		#8 x 3/4" Ph. FH SMS (Con. Force Balance Screw)	SS
42		Spiral Balance	
43	720205	Spiral Balance Shoe	Nylon
44	78X114FPAX	#8 x 1-1/4" Ph. FH SMS (Spiral Balance Screw)	410 SS

TABLE 8, CONT.:

Bill of Material, cont.

#	Part #	Description	Material
45	720197	Auto Lock Mechanism	C Steel
46	720198&9	Sweep Lock	Cast Zinc
47	720195&6	Auto Lock Cover Assembly	Cast Zinc
48	76X1180PTX	#6 x 1-1/8" Ph. FH SDS (Auto and Sweep Lock Screw)	SS
49	720200	Auto and Sweep Lock Keeper	Cast Zinc
50	76X34PPA	#6 x 3/4" PH. PH SDS (Keeper Screw)	SS
51	420181 L/R	Beveled Tilt Latch Corner Key	PVC
52	420182 L/R	Pull Rail Tilt Latch Corner Key	PVC
53	7634PHFL	#6 x 3/4" Ph. FH SDS (Corner Key Screw)	SS
54	420183	Tilt Latch	PVC
55	420184	Tilt Latch Retainer	PVC
56	720207	1" Tilt Latch Spring	SS
57	420186	Plastic Tilt Latch Finger Pull	PVC
58	720192	Metal Tilt Latch Finger Pull	Cast Zinc
59	420180	Pivot Bar Corner Key	PVC
60	720206	Pivot Bar	SS
63	720191	Sash Pull Handle	Cast Zinc
64	720194	Sash Pull Handle With Latch Assembly	Cast Zinc
65	7834FPT	#8 x 3/4" Ph. FH SDS (Pull Handle Screw)	SS
66	420188	Bottom Latch Strike Plate	Cast Zinc
67	7858B	#8 x 5/8" Ph. FH SMS (Strike Plate Screw)	SS
73	720136	I.G. Bead	PVC
74		Backbedding, GE 7700 or Dow 791	Silicone
75	71646N	Setting Block (7/8" x 1" x 1/8"), 85 +/- 5 duro.	EPDM
80	61012	Extruded Screen Frame	Alum
81	61011	Roll-Formed Screen Frame	Alum
82	7CKGLB21	Screen Corner Key for Extruded Frame	PVC
83	47042	Screen Corner Key with Pull Ring	PVC
84	47041	Screen Corner Key without Pull Ring	PVC
85	7CASPM	Tension Spring	SS
86	61816C48	Screen Cloth	Fiberglass
87	61635/61614	.140" Screen Spline (Machine/Hand Rolled)	Vinyl

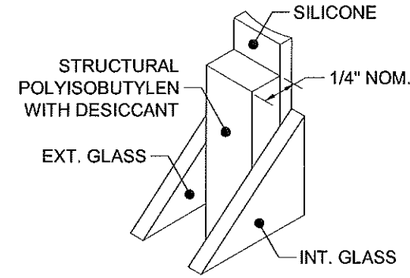

(76) KODISPACE 4SG TPS

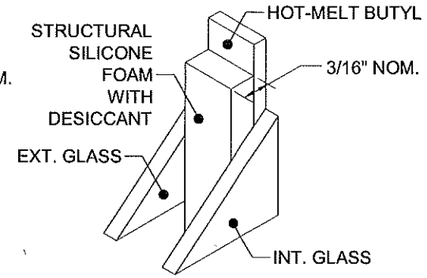

(77) SUPER SPACER® NXT™

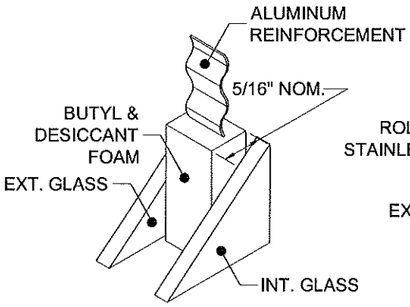

(78) DURASEAL® SPACER

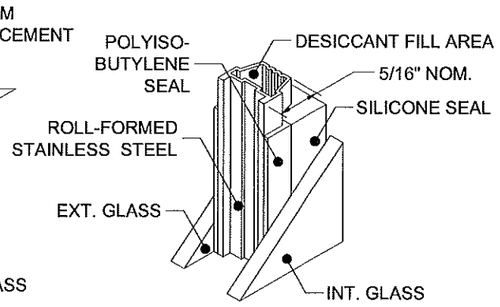

(79) XL EDGE™ SPACER

Part #	Description	Material
76	Kommerling 4SG TPS Spacer System	See this Sheet for Materials
77	Quanex Super Spacer nXT with Hot Melt Butyl	
78	Quanex Duraseal Spacer	
79	Cardinal XL Edge Spacer	

REFERENCE TEST REPORTS: FTL-8717, 8968 & 8970

NOTES:

1) PVC BY ROYAL WINDOW AND DOOR PROFILES, LTD., TO BE LABELED FOR AAMA EXTRUDER CODE.
2) ITEMS # 9-13, 15, 24, 28, 29, 34, 39, 61, 62, & 68-72 ARE NOT USED AND ARE NOT PART OF THIS APPROVAL.

STATE OF FLORIDA A. LYNN MILLER LICENSE No. 58705 6/14/16 PROFESSIONAL ENGINEER

A. LYNN MILLER, P.E.
P.E.# 58705

PGT®

1070 TECHNOLOGY DRIVE
N. VENICE, FL 34275
(941)-480-1600

CERT. OF AUTH. #29296

PRODUCT REVISED
as complying with the Florida Building Code
Acceptance No 16-0714.04
Expiration Date July 30, 2020
By Manuel Perez
Miami Dade Product Control

Revised By:	Date:	Revision:
JR	05/05/16	A) ADDED SPACERS.
Revised By:	Date:	Revision:

Description: BILL OF MATERIAL (BOM)
Drawn By: J ROSOWSKI
Title: SINGLE HUNG WINDOW INSTALLATION - NI
Date: 05/15/15
Series/Model: SH-5400
Scale: NTS
Sheet: 11 OF 12
Drawing No. MD-SH5400-01
Rev: A

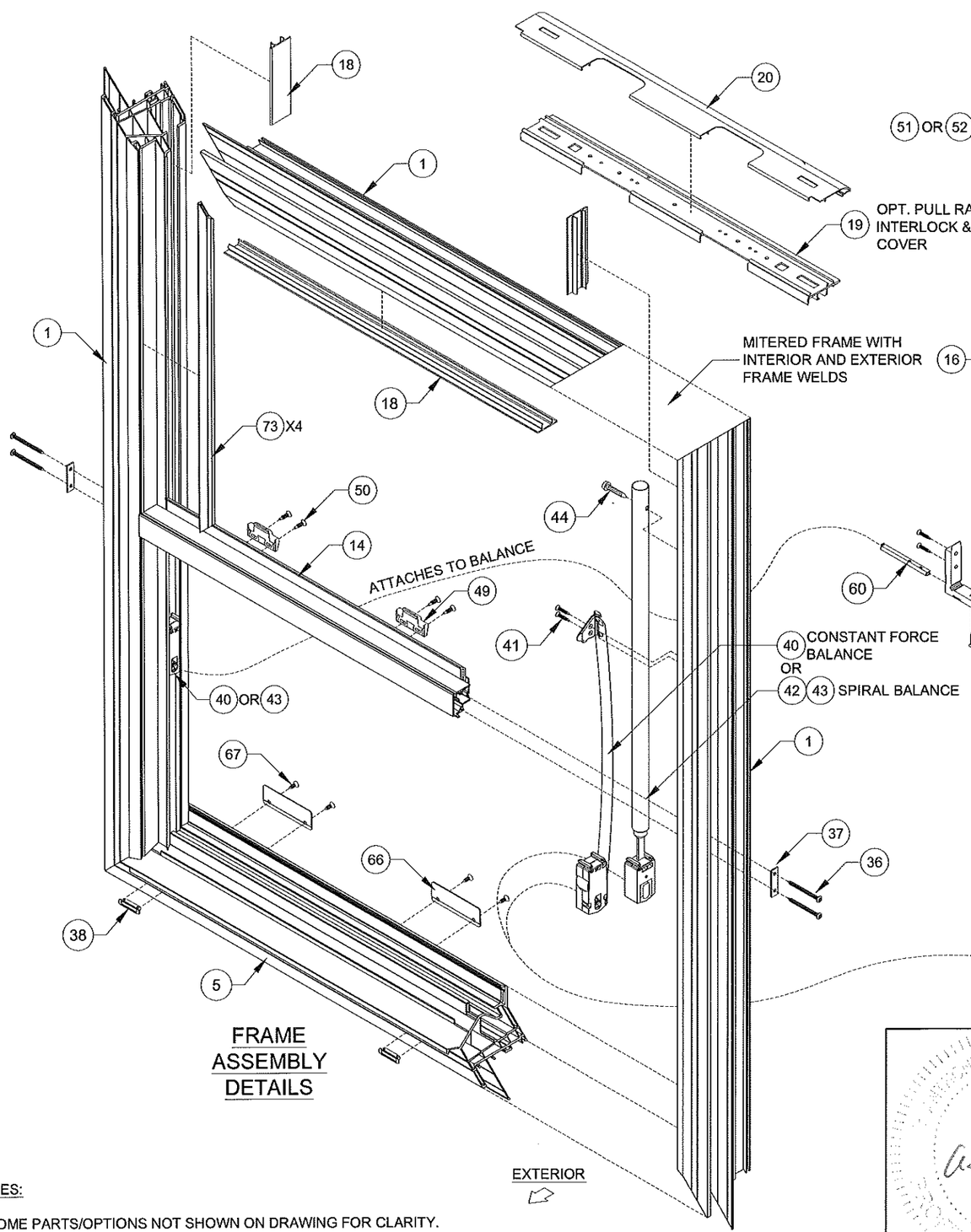

FRAME ASSEMBLY DETAILS

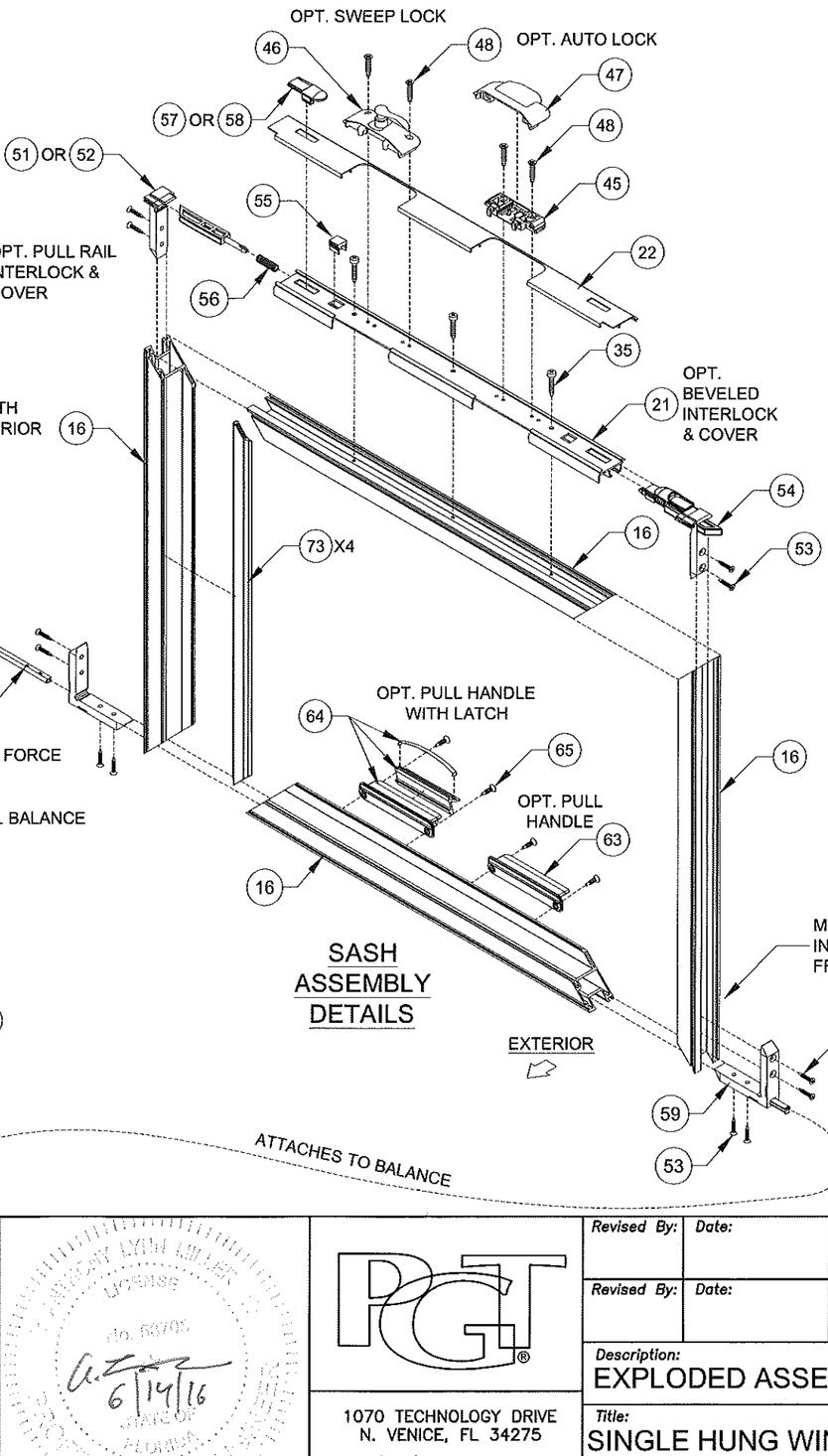

SASH ASSEMBLY DETAILS

EXTERIOR

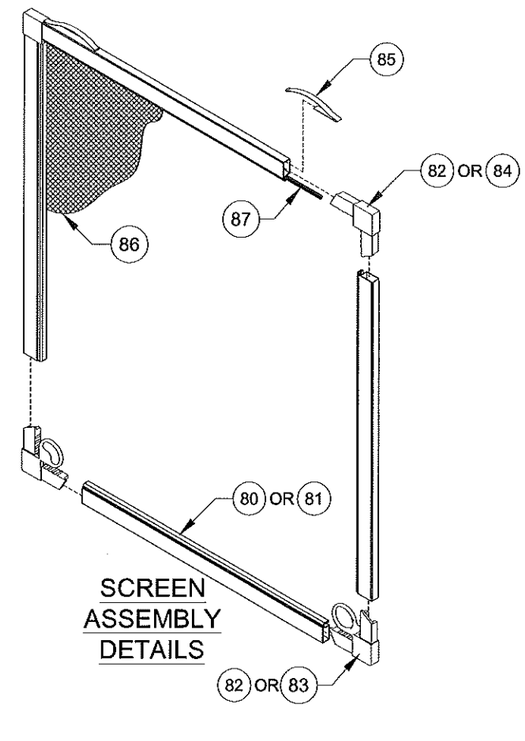

SCREEN ASSEMBLY DETAILS

NOTES:

1) SOME PARTS/OPTIONS NOT SHOWN ON DRAWING FOR CLARITY.
2) J-CHANNEL FRAME SHOWN, PARTS # 1 & 5. OTHER FRAME TYPES APPLY.
3) FOR REINFORCEMENT TYPES, SEE DETAILS ON SHEETS 6 & 7.
4) USE EITHER SASH TOP LOCKS OR SASH BOTTOM LOCKS.

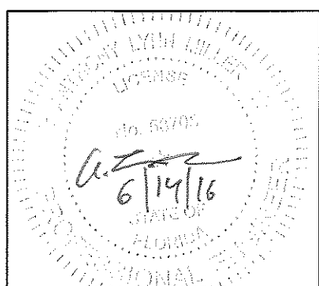

A. LYNN MILLER, P.E.
P.E.# 58705

PGT®

1070 TECHNOLOGY DRIVE
N. VENICE, FL 34275
(941)-480-1600

CERT. OF AUTH. #29296

Revised By:	Date:	Revision:
Revised By:	Date:	Revision:

PRODUCT REVISED
as complying with the Florida Building Code
Acceptance No 16-0714.04
Expiration Date July 30, 2020
By Manuel Perez
Miami Dade Product Control

Description:	Drawn By:
EXPLODED ASSEMBLY	J ROSOWSKI

Title:	Date:
SINGLE HUNG WINDOW INSTALLATION - NI	05/15/15

Series/Model:	Scale:	Sheet:	Drawing No.	Rev:
SH-5400	NTS	12 OF 12	MD-SH5400-01	A