MIAMI-DADE COUNTY
DEPARTMENT OF REGULATORY AND ECONOMIC RESOURCES (RER)
BOARD AND CODE ADMINISTRATION DIVISION

MIAMI-DADE COUNTY
PRODUCT CONTROL SECTION
11805 SW 26 Street, Room 208
T (786) 315-2590 F (786) 315-2599
www.miamidade.gov/economy

NOTICE OF ACCEPTANCE (NOA)

Mr. Glass Doors & Windows, Inc.
8120 NW 84 Street
Miami, FL 33166

SCOPE:

This NOA is being issued under the applicable rules and regulations governing the use of construction materials. The documentation submitted has been reviewed and accepted by Miami-Dade County RER-Product Control Section to be used in Miami-Dade County and other areas where allowed by the Authority Having Jurisdiction (AHJ).

This NOA shall not be valid after the expiration date stated below. The Miami-Dade County Product Control Section (In Miami-Dade County) and/ or the AHJ (in areas other than Miami-Dade County) reserve the right to have this product or material tested for quality assurance purposes. If this product or material fails to perform in the accepted manner, the manufacturer will incur the expense of such testing and the AHJ may immediately revoke, modify, or suspend the use of such product or material within their jurisdiction. RER reserves the right to revoke this acceptance, if it is determined by Miami-Dade County Product Control Section that this product or material fails to meet the requirements of the applicable building code.

This product is approved as described herein, and has been designed to comply with the Florida Building Code, including the High Velocity Hurricane Zone.

DESCRIPTION: Series "MG-7000" Aluminum Curtain Wall System - L.M.I.

APPROVAL DOCUMENT: Drawing No. **W13-44**, titled "Series MG-7000 Alum. Curtain Wall System (L.M.I.)", sheets 1 through 4, 4.1, 5 and 6 through 30 of 30, dated 09/16/13, with revision **A** dated 07/21/16, prepared by Al-Farooq Corporation, signed and sealed by Javad Ahmad, P.E., bearing the Miami-Dade County Product Control Revision stamp with the Notice of Acceptance number and expiration date by the Miami-Dade County Product Control Section.

MISSILE IMPACT RATING: Large and Small Missile Impact Resistant

LABELING: Each unit shall bear a permanent label with the manufacturer's name or logo, city, state, model/ series, and following statement: "Miami-Dade County Product Control Approved", unless otherwise noted herein.

RENEWAL of this NOA shall be considered after a renewal application has been filed and there has been no change in the applicable building code negatively affecting the performance of this product.

TERMINATION of this NOA will occur after the expiration date or if there has been a revision or change in the materials, use, and/ or manufacture of the product or process. Misuse of this NOA as an endorsement of any product, for sales, advertising or any other purposes shall automatically terminate this NOA. Failure to comply with any section of this NOA shall be cause for termination and removal of NOA.

ADVERTISEMENT: The NOA number preceded by the words Miami-Dade County, Florida, and followed by the expiration date may be displayed in advertising literature. If any portion of the NOA is displayed, then it shall be done in its entirety.

INSPECTION: A copy of this entire NOA shall be provided to the user by the manufacturer or its distributors and shall be available for inspection at the job site at the request of the Building Official.

This NOA **revises NOA No. 13-0930.12** and consists of this page 1 and evidence pages E-1 and E-2, as well as approval document mentioned above.

The submitted documentation was reviewed by **Manuel Perez, P.E.**

MIAMI-DADE COUNTY APPROVED

10/21/16

NOA No. 16-0808.10
Expiration Date: February 14, 2018
Approval Date: October 27, 2016

Mr. Glass Doors & Windows, Inc.

NOTICE OF ACCEPTANCE: EVIDENCE SUBMITTED

A. DRAWINGS

1. Manufacturer's die drawings and sections.
   (Submitted under previous NOA No. 13-0930.12)
2. Drawing No. **W13-44**, titled "Series MG-7000 Alum. Curtain Wall System (L.M.I.)", sheets 1 through 4, 4.1, 5 and 6 through 30 of 30, dated 09/16/13, with revision **A** dated 07/21/16, prepared by Al-Farooq Corporation, signed and sealed by Javad Ahmad, P.E.

B. TESTS

1. Test reports on: 1) Air Infiltration Test, per FBC, TAS 202–94
   2) Uniform Static Air Pressure Test, Loading per FBC TAS 202-94
   3) Water Resistance Test, per FBC, TAS 202-94
   4) Large Missile Impact Test per FBC, TAS 201-94
   5) Cyclic Wind Pressure Loading per FBC, TAS 203-94

   along with marked-up drawings and installation diagram of an aluminum curtain wall system (single span), prepared by Fenestration Testing Laboratory, Inc., Test Report No. **FTL-6742**, dated 02/28/12, signed and sealed by Marlin D. Brinson, P.E.
   (Submitted under previous NOA No. 13-0930.12)
2. Test reports on: 1) Air Infiltration Test, per FBC, TAS 202-94
   2) Uniform Static Air Pressure Test, Loading per FBC TAS 202-94
   3) Water Resistance Test, per FBC, TAS 202-94
   4) Large Missile Impact Test per FBC, TAS 201-94
   5) Cyclic Wind Pressure Loading per FBC, TAS 203-94

   along with marked-up drawings and installation diagram of Aluminum curtain wall system (single span), prepared by Fenestration Testing Laboratory, Inc., Test Report No. **FTL-6712**, dated 04/06/12, signed and sealed by Marlin D. Brinson, P.E.
   (Submitted under previous NOA No. 13-0930.12)
3. Test reports on: 1) Air Infiltration Test, per FBC, TAS 202-94
   2) Uniform Static Air Pressure Test, Loading per FBC TAS 202-94
   3) Water Resistance Test, per FBC, TAS 202-94
   4) Large Missile Impact Test per FBC, TAS 201-94
   5) Cyclic Wind Pressure Loading per FBC, TAS 203-94

   along with marked-up drawings and installation diagram of an aluminum curtain wall system, prepared by Fenestration Testing Laboratory, Inc., Test Report No. **FTL-6602**, dated 10/19/11, signed and sealed by Marlin D. Brinson, P.E.
   (Submitted under previous NOA No. 13-0930.12)

Manuel Perez

Manuel Perez, P.E.
Product Control Examiner
NOA No. 16-0808.10
Expiration Date: February 14, 2018
Approval Date: October 27, 2016

NOTICE OF ACCEPTANCE: EVIDENCE SUBMITTED

B. TESTS (CONTINUED)

4. Test reports on: 1) Air Infiltration Test, per FBC, TAS 202-94
2) Uniform Static Air Pressure Test, Loading per FBC TAS 202-94
3) Water Resistance Test, per FBC, TAS 202-94
4) Large Missile Impact Test per FBC, TAS 201-94
5) Cyclic Wind Pressure Loading per FBC, TAS 203-94
along with marked-up drawings and installation diagram of an aluminum curtain wall system (twin span), prepared by Fenestration Testing Laboratory, Inc., Test Reports No. **FTL-6193**, dated 05/18/11, signed and sealed by Marlin D. Brinson, P.E.
(Submitted under previous NOA No. 13-0930.12)

C. CALCULATIONS

1. Anchor verification calculations and structural analysis, complying with **FBC 5th Edition (2014)**, dated 01/11/16, prepared by Al-Farooq Corporation, signed and sealed by Javad Ahmad, P.E.
(Submitted under NOA No. 15-1014.02)

2. Glazing complies with **ASTM E1300-09**

D. QUALITY ASSURANCE

1. Miami-Dade Department of Regulatory and Economic Resources (RER).

E. MATERIAL CERTIFICATIONS

1. Notice of Acceptance No. **14-0916.11** issued to **Kuraray America, Inc.** for their **"SentryGlas® (Clear and White) Glass Interlayers"** dated 06/25/15, expiring on 07/04/18.

F. STATEMENTS

1. Statement letter of conformance, complying with **FBC 5th Edition (2014)**, and of no financial interest, dated July 22, 2016, issued by Al-Farooq Corporation, signed and sealed by Javad Ahmad, P.E.

G. OTHERS

1. Notice of Acceptance No. **13-0930.12**, issued to Mr. Glass Doors &Windows, Inc. for their Series "MG-7000" Aluminum Curtain Wall System - L.M.I., approved on 11/21/13 and expiring on 02/14/18.

Manuel Perez, P.E.
Product Control Examiner
NOA No. 16-0808.10
Expiration Date: February 14, 2018
Approval Date: October 27, 2016

MR GLASS DOORS & WINDOWS, INC.
SERIES MG-7000
ALUMINUM CURTAINWALL SYSTEM

CURTAIN WALL SYSTEM IS RATED FOR LARGE & SMALL MISSILE IMPACT.
SHUTTERS ARE NOT REQD.

CODE REQUIREMENTS FOR SAFEGUARDS MUST BE OBSERVED.

THIS PRODUCT HAS BEEN DESIGNED AND TESTED TO COMPLY WITH THE REQUIREMENTS OF THE 2014 (5TH EDITION) FLORIDA BUILDING CODE INCLUDING HIGH VELOCITY HURRICANE ZONE (HVHZ).

ANCHORS SHALL BE AS LISTED, SPACED AS SHOWN ON DETAILS, ANCHORS EMBEDMENT TO BASE MATERIAL SHALL BE BEYOND WALL DRESSING OR STUCCO.

ANCHORING OR LOADING CONDITIONS NOT SHOWN IN THESE DETAILS ARE NOT PART OF THIS APPROVAL.

ALL SHIMS TO BE HIGH IMPACT, NON-METALLIC AND NON-COMPRESSIBLE.

MATERIALS INCLUDING BUT NOT LIMITED TO STEEL/METAL SCREWS, THAT COME INTO CONTACT WITH OTHER DISSIMILAR MATERIALS SHALL MEET THE REQUIREMENTS OF THE 2014 FLORIDA BUILDING CODE.

INSTRUCTIONS:

USE CHARTS AS FOLLOWS.

STEP 1 DETERMINE DESIGN WIND LOAD REQUIREMENT BASED ON WIND VELOCITY, BLDG. HEIGHT, WIND ZONE USING APPLICABLE ASCE 7 STANDARD.

STEP 2 SEE CHARTS ON SHEET 4 FOR DESIGN LOAD CAPACITY OF DESIRED GLASS SIZE.

STEP 3 CHECK MULLION CAPACITY FOR A GIVEN SPACING AND HEIGHT USING CHARTS ON SHEETS 6 & 7 FOR SINGLE SPANS, AND CHARTS ON SHEETS 8 THRU 10 FOR EQUAL MULTIPLE SPANS.

STEP 4 USING HEAD/SILL ANCHOR DETAILS ON SHEET 5 SELECT ANCHOR OPTION.

STEP 5 CHECK INTERMEDIATE ANCHOR CAPACITY FOR MULTIPLE SPANS USING CHARTS OR DETAILS ON SHEETS 18 THRU 27.

STEP 6 THE LOWEST VALUE RESULTING FROM STEPS 2, 3, 4 AND 5 SHALL APPLY TO ENTIRE SYSTEM.

INDEX OF DRAWING

SHEET NO.	DESCRIPTION
1	GENERAL NOTES
2 & 3	TYPICAL CURTAIN WALL ELEVATION
4	GLASS CAPACITY CHART
4.1	GLAZING DETAILS (SEE NOTE BELOW)
5	HEAD/SILL ANCHOR DETAILS
6 & 7	SINGLE SPAN MULLION CHARTS
8	TWIN SPAN JAMB CAPACITY
9	UN-REINFORCED TWIN SPAN MULLION CAPACITY
10	REINFORCED TWIN SPAN MULLION CAPACITY
11	SINGLE SPAN CORNER MULLION
12	TWIN SPAN CORNER MULLION
13 & 14	VERTICAL AND HORIZONTAL SECTION DETAILS
15	DOOR SUBFRAME DETAILS
16 & 17	CORNER MULLION DETAILS
18 THRU 20	WIND LOAD ANCHOR DETAILS
21 THRU 23	WIND LOAD + DEAD LOAD ANCHOR DETAILS
24 THRU 27	WIND LOAD + DEAD LOAD CORNER MULLION ANCHOR DETAILS
28	EXTRUSION DETAILS
29	BILL OF MATERIALS
30	CORNER CONSTRUCTION DETAILS

NOTE: WHEN SYSTEM IS USED IN AN AREA MORE THAN 30 FEET ABOVE GRADE, THE EXTERIOR LITE OF INSULATED LAMINATED GLASS MUST BE 1/4" TEMPERED GLASS OPTION.

LAMINATED GLASS
INSUL. LAM. GLASS
LARGE MISSILE IMPACT

Engr: JAVAD AHMAD
CIVIL
FLA. PE # 70592
C.A.N. 3538

JUL 25 2016

PRODUCT REVISED
as complying with the Florida Building Code
Acceptance No 16-0808.10
Expiration Date Feb. 14, 2018
By Miami-Dade Product Control

AL-FAROOQ CORPORATION
ENGINEERS & PRODUCT DEVELOPMENT
9360 SUNSET DRIVE, SUITE 220
MIAMI, FLORIDA 33173
TEL. (305) 264-8100 FAX. (305) 262-6978

COMP-ANL\W13-44MG

SERIES MG-7000 ALUM CURTAIN WALL SYSTEM (L.M.I.)

MR. GLASS DOORS & WINDOWS INC.
8120 N.W. 84 STREET
MEDLEY, FL. 33166
TEL. (305) 470-8284 FAX. (305) 470-8285

revisions:

no	date	by	description
A	07.21.16		UPDATED TO 2014 FBC

date: 09-16-13
scale: -
dr. by: TARIQ
chk. by:

drawing no.
W13-44

sheet 1 of 30

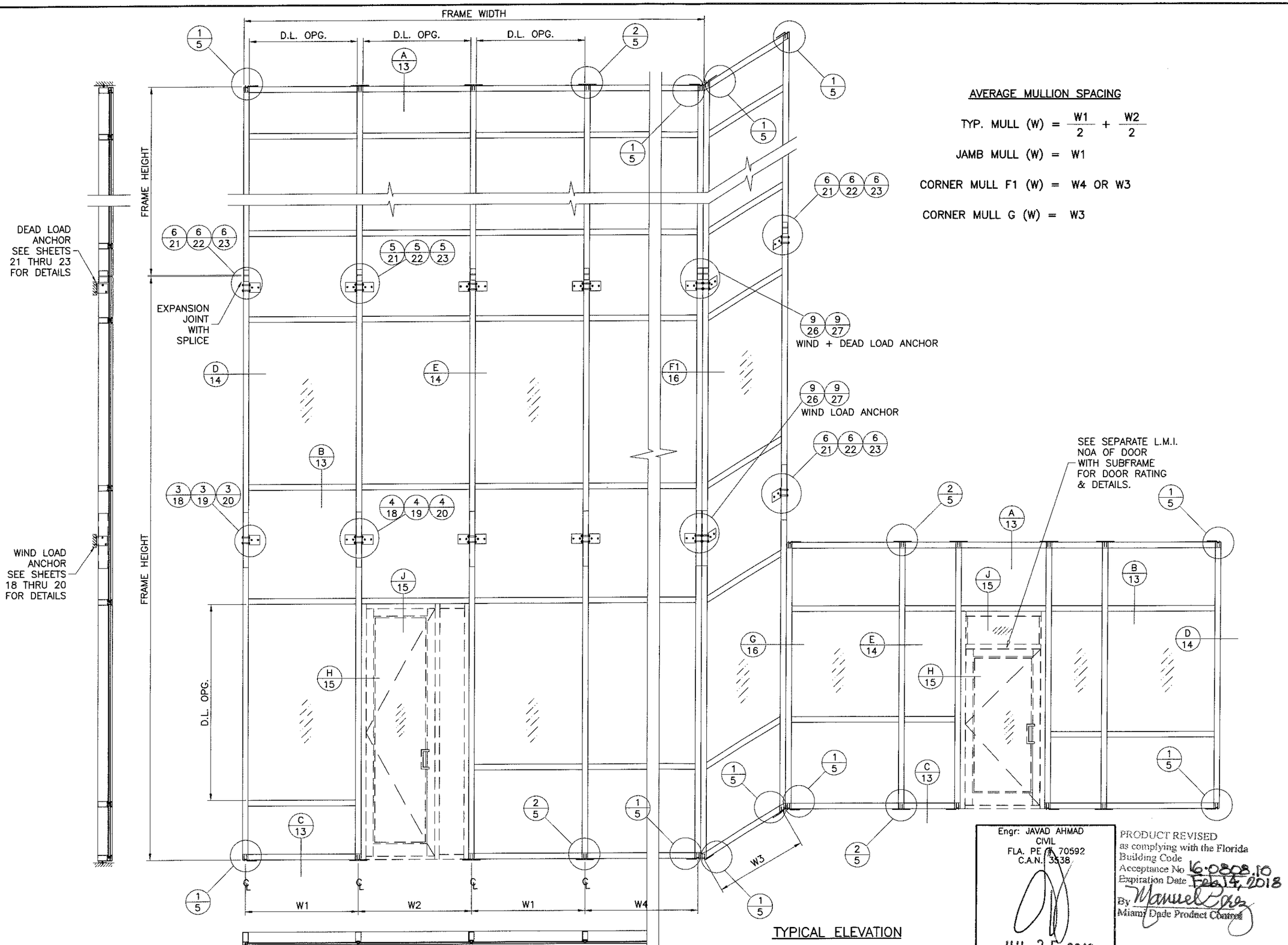

AVERAGE MULLION SPACING

TYP. MULL (W) = $\frac{W1}{2} + \frac{W2}{2}$

JAMB MULL (W) = W1

CORNER MULL F1 (W) = W4 OR W3

CORNER MULL G (W) = W3

TYPICAL ELEVATION

WITH DOUBLE JAMBS AT 90° OUTSIDE CORNER

Engr: JAVAD AHMAD
CIVIL
FLA. PE # 70592
C.A.N. 3538

JUL 25 2016

PRODUCT REVISED
as complying with the Florida Building Code
Acceptance No 16-0808.10
Expiration Date Feb 14, 2018
By Manuel Diaz
Miami Dade Product Control

AL-FAROOQ CORPORATION
ENGINEERS & PRODUCT DEVELOPMENT
9360 SUNSET DRIVE, SUITE 220
MIAMI, FLORIDA 33173
TEL. (305) 264-8100 FAX. (305) 262-6978

COMP-ANL\W13-44MG

SERIES MG-7000 ALUM. CURTAIN WALL SYSTEM (L.M.I.)

MR. GLASS DOORS & WINDOWS INC.
8120 N.W. 84 STREET
MEDLEY, FL. 33166
TEL. (305) 470-8284 FAX. (305) 470-8285

revisions:

no	date	by	description
A	07.21.16		UPDATED TO 2014 FBC

date: 09-16-13
scale: 1/4"=1'-0"
dr. by: TARIQ
chk. by:

drawing no.
W13-44

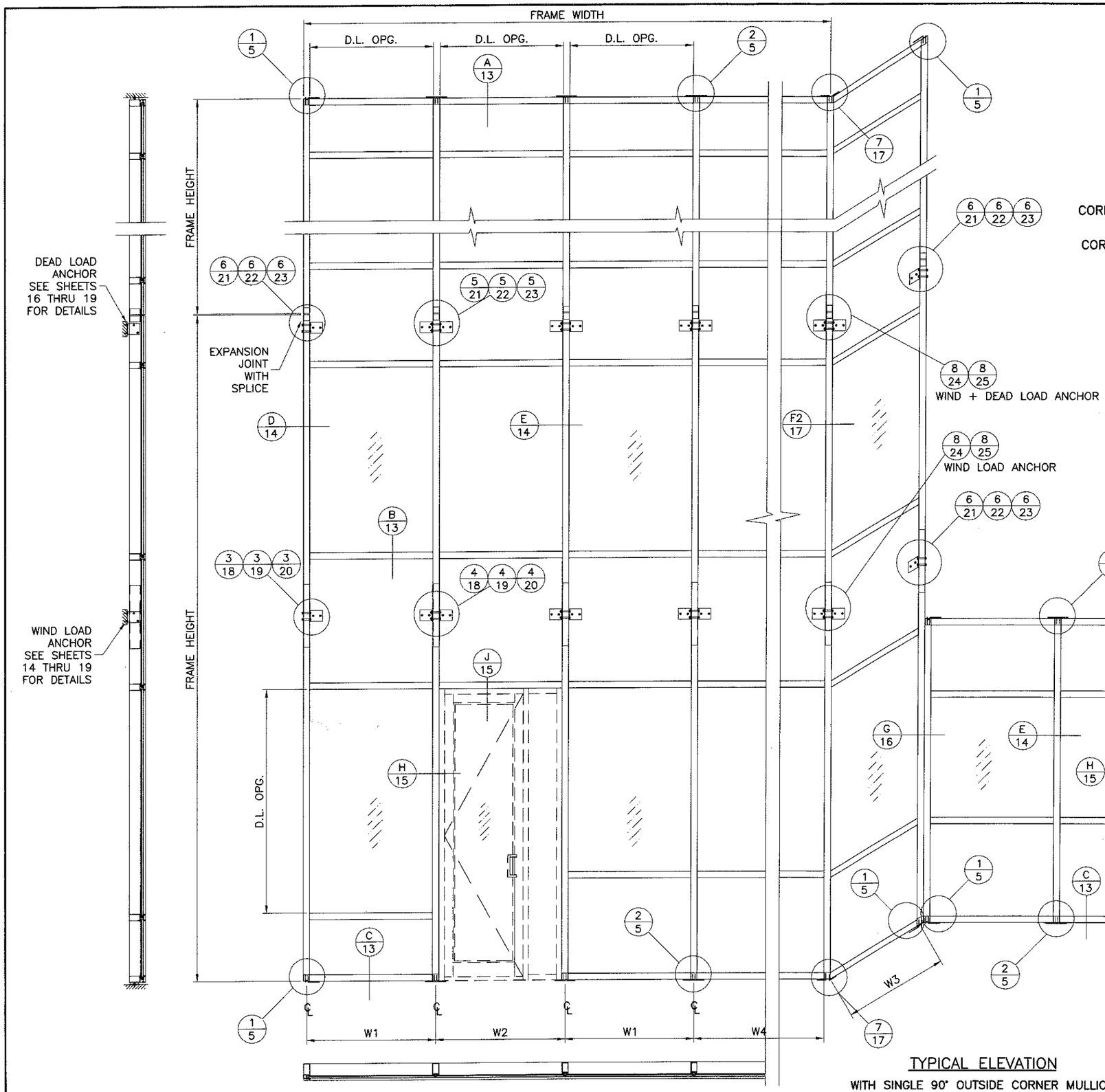

TYPICAL ELEVATION

WITH SINGLE 90° OUTSIDE CORNER MULLION

AVERAGE MULLION SPACING

TYP. MULL (W) = $\frac{W1}{2} + \frac{W2}{2}$

JAMB MULL (W) = W1

CORNER MULL F1 (W) = W4 OR W3

CORNER MULL G (W) = W3

Engr: JAVAD AHMAD
CIVIL
FLA. PE # 70592
C.A.N. 3838

JUL 25 2016

PRODUCT REVISED
as complying with the Florida Building Code
Acceptance No 16-0909.10
Expiration Date Feb. 14, 2018
By Manuel Inza
Miami Dade Product Control

AL-FAROOQ CORPORATION
ENGINEERS & PRODUCT DEVELOPMENT
9360 SUNSET DRIVE, SUITE 220
MIAMI, FLORIDA 33173
TEL. (305) 264-8100 FAX. (305) 262-6978

COMP-ANL\W13-44MG

SERIES MG-7000 ALUM CURTAIN WALL SYSTEM (L.M.I.)

MR. GLASS DOORS & WINDOWS INC.
8120 N.W. 84 STREET
MEDLEY, FL. 33166
TEL. (305) 470-8284 FAX. (305) 470-8285

revisions:

no	date	by	description
A	07.21.16		UPDATED TO 2014 FBC

date: 09-16-13
scale: 1/4"=1'-0"
dr. by: TARIQ
chk. by:

drawing no. W13-44

sheet 3 of 30

GLASS LOAD CAPACITY – PSF				
		GLASS TYPES 'A' & 'A1'		
			MULLION WITHOUT PRESS PLATE	
NOMINAL DIMS.		MULLION WITH PRESS PLATE	CORNER MULL 13/16" SILICONE	BUTT GLAZE MULL 1" SILICONE
D.L.O. WIDTH	D.L.O. HEIGHT	EXT. (+) INT. (–)	EXT. (+) INT. (–)	EXT. (+) INT. (–)
36"	90"	100.0	100.0	100.0
39"		100.0	100.0	100.0
42"		100.0	100.0	100.0
45"		100.0	99.6	100.0
48"		100.0	93.6	100.0
51"		100.0	88.3	100.0
54"		100.0	83.6	100.0
57"		100.0	79.3	97.6
60"		100.0	75.5	92.9
36"	96"	100.0	100.0	100.0
39"		100.0	100.0	100.0
42"		100.0	100.0	100.0
45"		100.0	99.6	100.0
48"		100.0	93.6	100.0
51"		100.0	88.3	100.0
54"		100.0	83.6	100.0
56"		100.0	79.3	97.6
36"	102"	100.0	100.0	100.0
39"		100.0	100.0	100.0
42"		100.0	100.0	100.0
45"		100.0	99.6	100.0
48"		100.0	93.6	100.0
51"		100.0	88.3	100.0
53"		100.0	83.6	100.0
36"	108"	100.0	100.0	100.0
39"		100.0	100.0	100.0
42"		100.0	100.0	100.0
45"		100.0	99.6	100.0
48"		100.0	93.6	100.0
50"		100.0	88.3	100.0
36"	114"	100.0	100.0	100.0
39"		100.0	100.0	100.0
42"		100.0	100.0	100.0
45"		100.0	99.6	100.0
47"		100.0	93.6	100.0
36"	120"	100.0	100.0	100.0
39"		100.0	100.0	100.0
42"		100.0	100.0	100.0
45"		100.0	99.6	100.0
36"	126"	100.0	100.0	100.0
39"		100.0	100.0	100.0
42"		100.0	100.0	100.0
36"	132"	100.0	100.0	100.0
39"		100.0	100.0	100.0
36"	138"	100.0	100.0	100.0
39"		100.0	100.0	100.0
36"	144"	100.0	100.0	100.0

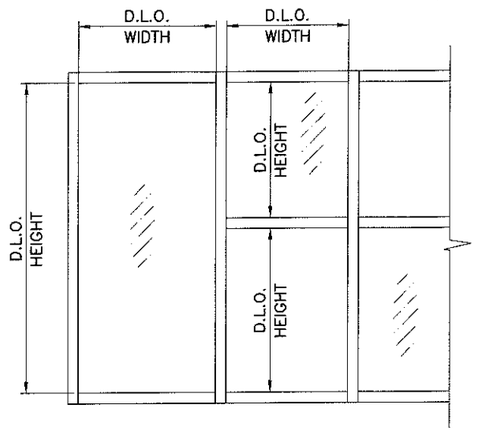

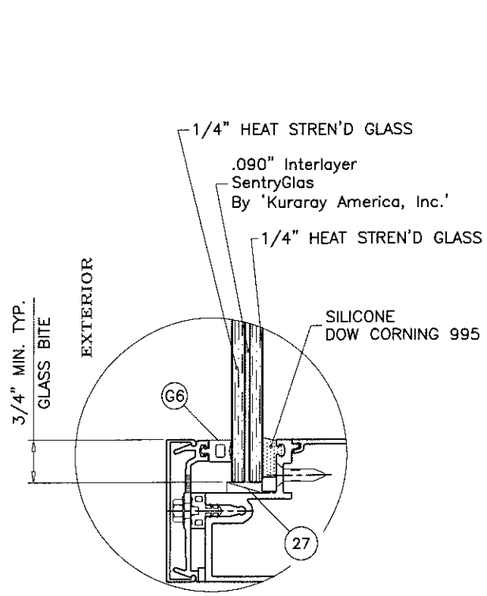

GLASS TYPE 'A'

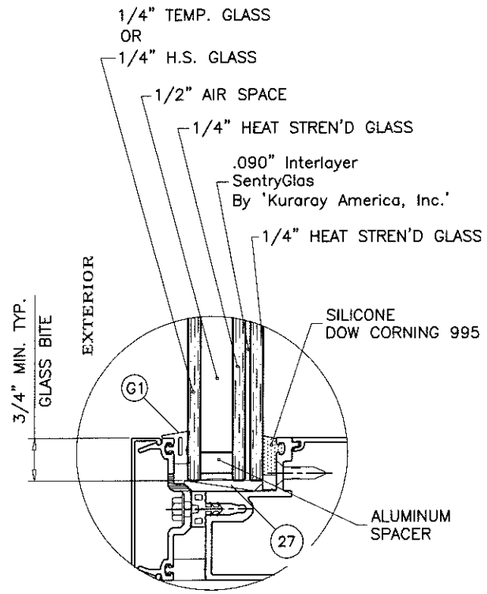

GLASS TYPE 'A1'

GLAZING OPTIONS

NOTE:
GLASS CAPACITIES ON THIS SHEET ARE BASED ON ASTM E1300–09 (3 SEC. GUSTS)

WHEN SYSTEM IS USED IN AN AREA MORE THAN 30 FEET ABOVE GRADE, THE EXTERIOR LITE OF INSULATED LAMINATED GLASS MUST BE 1/4" TEMPERED GLASS OPTION.

Engr: JAVAD AHMAD
CIVIL
FLA. PE # 70592
C.A.N. 3538
JUL 25 2016

PRODUCT REVISED
as complying with the Florida Building Code
Acceptance No 16-0808.10
Expiration Date Feb. 14, 2018
By
Miami Dade Product Control

AL-FAROOQ CORPORATION
ENGINEERS & PRODUCT DEVELOPMENT
9360 SUNSET DRIVE, SUITE 220
MIAMI, FLORIDA 33173
TEL. (305) 264-8100 FAX. (305) 262-6978
COMP-ANL\W13-44MG

SERIES MG-7000 ALUM CURTAIN WALL SYSTEM (L.M.I.)
MR. GLASS DOORS & WINDOWS INC.
8120 N.W. 84 STREET
MEDLEY, FL. 33166
TEL. (305) 470-8284 FAX. (305) 470-8285

revisions:			
no	date	by	description
A	07.21.16		UPDATED TO 2014 FBC

date: 09-16-13
scale:
dr. by: TARIQ
chk. by:

drawing no.
W13-44

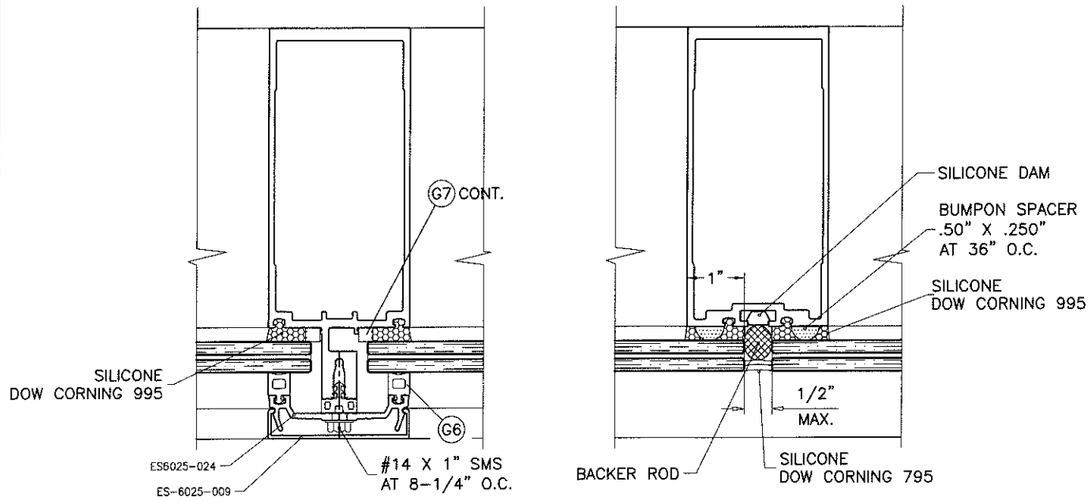

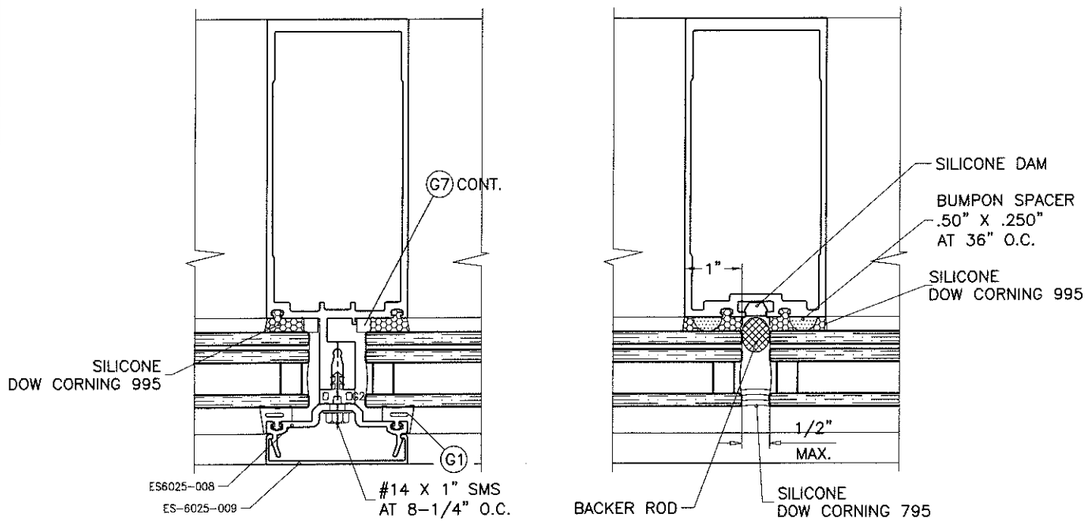

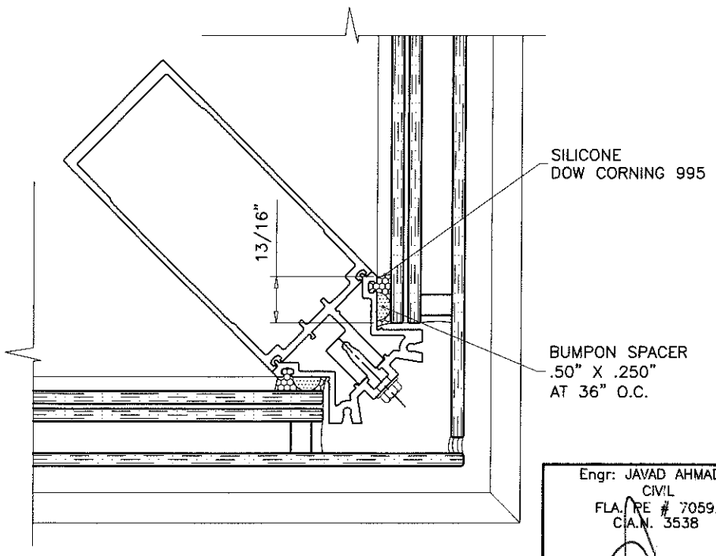

HEAVY MULLION
WITH PRESS PLATE

BUTT GLAZED MULLION
WITHOUT PRESS PLATE
1" SILICONE

CORNER MULLION
WITHOUT PRESS PLATE
13/16" SILICONE

Engr: JAVAD AHMAD
CIVIL
FLA. RE # 70592
C.A.N. 3538

JUL 25 2016

PRODUCT REVISED
as complying with the Florida
Building Code
Acceptance No 16-0908.10
Expiration Date Feb. 14, 2018
By
Miami Dade Product Control

AL-FAROOQ CORPORATION
ENGINEERS & PRODUCT DEVELOPMENT
9360 SUNSET DRIVE, SUITE 220
MIAMI, FLORIDA 33173
TEL. (305) 264-8100 FAX. (305) 262-6978

COMP-ANL\W13-44MG

SERIES MG-7000 ALUM CURTAIN WALL SYSTEM (L.M.I.)

MR. GLASS DOORS & WINDOWS INC.
8120 N.W. 84 STREET
MEDLEY, FL. 33166
TEL. (305) 470-8284 FAX. (305) 470-8285

revisions:

no	date	by	description
A	07.21.16		UPDATED TO 2014 FBC

date: 09-16-13
scale: 3/8" = 1"
dr. by: TARIQ
chk. by:

drawing no.
W13-44

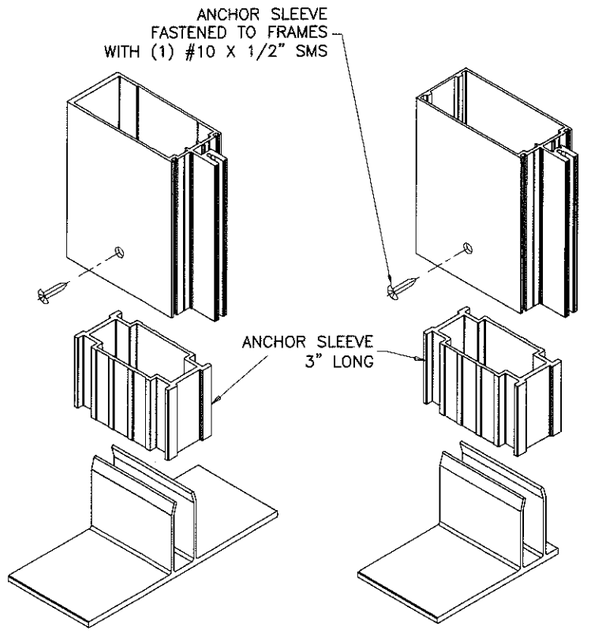

MULLION ANCHOR CLIP
DETAIL '2'

JAMB ANCHOR CLIP
DETAIL '1'

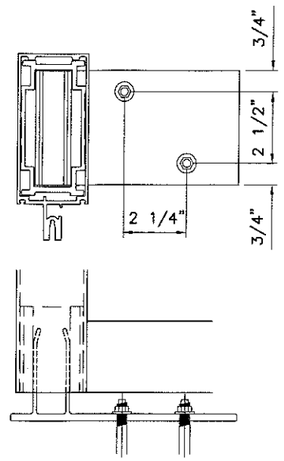

ANCHORS TYPE 'A' & 'B'
JAMB CLIP ANCHORS

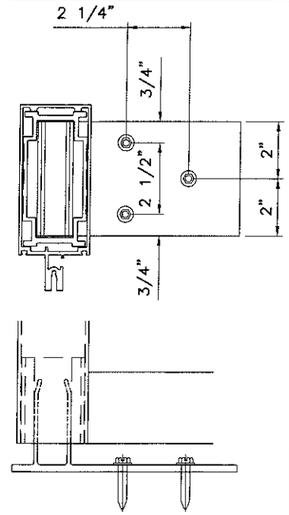

ANCHORS TYPE 'C'
JAMB CLIP ANCHORS

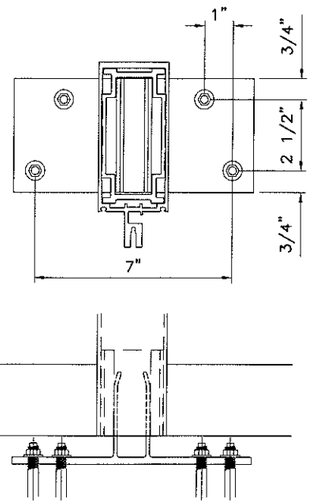

ANCHORS TYPE 'A'
MULLION CLIP ANCHORS

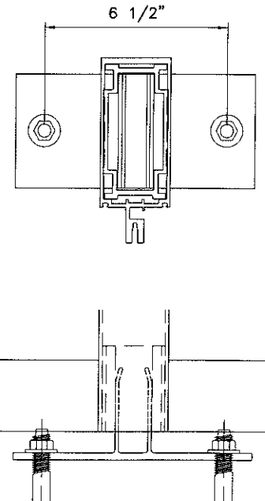

ANCHORS TYPE 'B'
MULLION CLIP ANCHORS

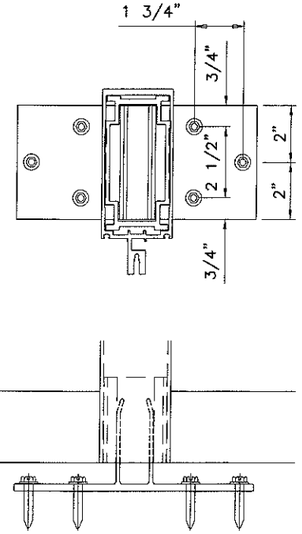

ANCHORS TYPE 'C'
MULLION CLIP ANCHORS

ANCHOR 'A'
DIRECTLY INTO CONCRETE
3/8" DIA. KWIK BOLT-3 EXPANSION ANCHOR
(2) PER SIDE
WITH 2-1/2" MIN. EMBED INTO CONCRETE.
3" MIN. EDGE DIST.
2-1/2" MIN. SPACING

ANCHOR 'B'
DIRECTLY INTO CONCRETE
1/2" DIA. KWIK BOLT-3 EXPANSION ANCHOR
(1) PER SIDE
WITH 3-1/2" MIN. EMBED INTO CONCRETE.
3-3/4" MIN. EDGE DIST.
6-1/2" MIN. SPACING

ANCHOR 'C'
INTO METAL STRUCTURES (STEEL 1/4" MIN. THICKNESS)
5/16" DRIL-FLEX SELF DRILLING SCREWS
(3) PER SIDE
1/2" MIN. EDGE DIST.
3/4" MIN. SPACING

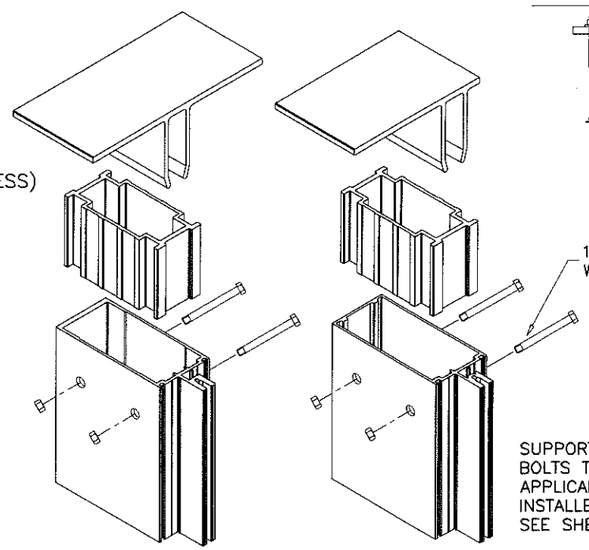

SUPPORT DEAD LOAD AT HEAD ANCHORS USING BOLTS THRU FRAME, SLEEVE AND CLIP LEGS. APPLICABLE ONLY WHEN SINGLE SPAN FRAMES ARE INSTALLED ABOVE TWIN SPAN FRAMES.
SEE SHEETS 8 THRU 10.

Engr: JAVAD AHMAD
CIVIL
FLA. PE # 70592
C.A.N. 3538

JUL 25 2016

PRODUCT REVISED
as complying with the Florida Building Code
Acceptance No 16-0808.10
Expiration Date ~~Feb. 14, 2018~~
By Manuel Perez
Miami Dade Product Control

afc
AL-FAROOQ CORPORATION
ENGINEERS & PRODUCT DEVELOPMENT
9360 SUNSET DRIVE, SUITE 220
MIAMI, FLORIDA 33173
TEL. (305) 264-8100 FAX. (305) 262-6978

COMP-ANL\W13-44MG

SERIES MG-7000 ALUM CURTAIN WALL SYSTEM (L.M.I.)

MR. GLASS DOORS & WINDOWS INC.
8120 N.W. 84 STREET
MEDLEY, FL. 33166
TEL. (305) 470-8284 FAX. (305) 470-8285

revisions:

no	date	by	description
A	07.21.16		UPDATED TO 2014 FBC

date: 09-16-13
scale:
dr. by: TARIQ
chk. by:

drawing no.
W13-44

sheet 5 of 30

JAMB LOAD CAPACITY – PSF SINGLE SPANS WITH OR W/O HORIZONTALS			
NOMINAL DIMS.		JAMB 'J1'	JAMB 'J2'
WIDTH (W)	FRAME HEIGHT	EXT. (+) INT. (–)	EXT. (+) INT. (–)
36"	90"	100.0	100.0
39"		100.0	100.0
42"		100.0	100.0
45"		100.0	100.0
48"		100.0	100.0
51"		100.0	100.0
54"		100.0	100.0
57"		100.0	100.0
60"		100.0	100.0
36"	96"	100.0	100.0
39"		100.0	100.0
42"		100.0	100.0
45"		100.0	100.0
48"		100.0	100.0
51"		100.0	100.0
54"		100.0	100.0
57"		100.0	100.0
60"		100.0	100.0
36"	99–3/4"	100.0	100.0
39"		100.0	100.0
42"		100.0	100.0
45"		100.0	100.0
48"		100.0	100.0
51"		100.0	100.0
54"		100.0	100.0
57"		100.0	100.0
60"		100.0	100.0
36"	102"	–	100.0
39"		–	100.0
42"		–	100.0
45"		–	100.0
48"		–	100.0
51"		–	100.0
54"		–	100.0
57"		–	100.0
60"		–	100.0
36"	108"	–	100.0
39"		–	100.0
42"		–	100.0
45"		–	100.0
48"		–	100.0
51"		–	100.0
54"		–	100.0
57"		–	100.0
60"		–	100.0
36"	114"	–	100.0
39"		–	100.0
42"		–	100.0
45"		–	100.0
48"		–	100.0
51"		–	100.0
54"		–	100.0
57"		–	100.0
60"		–	100.0

JAMB LOAD CAPACITY – PSF SINGLE SPANS WITH OR W/O HORIZONTALS			
NOMINAL DIMS.		JAMB 'J1'	JAMB 'J2'
WIDTH (W)	FRAME HEIGHT	EXT. (+) INT. (–)	EXT. (+) INT. (–)
36"	120"	–	100.0
39"		–	100.0
42"		–	100.0
45"		–	100.0
48"		–	100.0
51"		–	100.0
54"		–	100.0
57"		–	100.0
60"		–	100.0
36"	126"	–	100.0
39"		–	100.0
42"		–	100.0
45"		–	100.0
48"		–	100.0
51"		–	100.0
54"		–	100.0
57"		–	100.0
60"		–	98.8
36"	132"	–	100.0
39"		–	100.0
42"		–	100.0
45"		–	100.0
48"		–	100.0
51"		–	100.0
54"		–	98.9
57"		–	93.7
60"		–	89.0
36"	138"	–	100.0
39"		–	100.0
42"		–	100.0
45"		–	100.0
48"		–	97.4
51"		–	91.7
54"		–	86.6
57"		–	82.0
60"		–	77.9
36"	144"	–	100.0
39"		–	100.0
42"		–	98.0
45"		–	91.5
48"		–	85.7
51"		–	80.7
54"		–	76.2
57"		–	72.2
60"		–	68.6
36"	150"	–	100.0
39"		–	93.4
42"		–	86.7
45"		–	80.9
48"		–	75.9
51"		–	71.4
54"		–	67.4
57"		–	63.9
60"		–	60.7

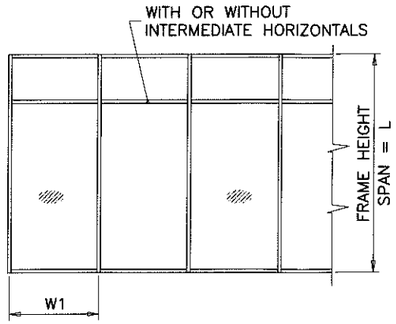

WIDTH (W) = W1
AT FRAME JAMB

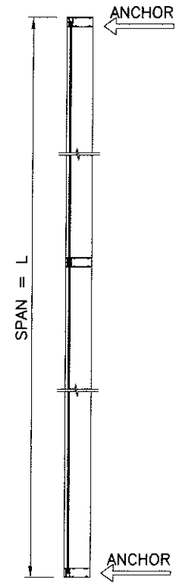

SINGLE SPAN

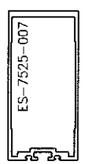

JAMB 'J1'

Ix IN^4	Sx IN^3
8.8201	3.3166

JAMB 'J2'

Ix IN^4	Sx IN^3
10.0003	2.9374

Engr: JAVAD AHMAD
CIVIL
FLA. PE # 70592
C.A.N. 3536

JUL 25 2016

PRODUCT REVISED
as complying with the Florida Building Code
Acceptance No 16-0809.10
Expiration Date Feb. 14, 2018
By
Miami-Dade Product Control

AL-FAROOQ CORPORATION
ENGINEERS & PRODUCT DEVELOPMENT
9360 SUNSET DRIVE, SUITE 220
MIAMI, FLORIDA 33173
TEL. (305) 264-8100 FAX. (305) 262-6978

COMP–ANL\W13–44MG

SERIES MG–7000 ALUM CURTAIN WALL SYSTEM (L.M.I.)

MR. GLASS DOORS & WINDOWS INC.
8120 N.W. 84 STREET
MEDLEY, FL. 33166
TEL. (305) 470–8284 FAX. (305) 470–8285

revisions:

no	date	by	description
A	07.21.16		UPDATED TO 2014 FBC

date: 09–16–13
scale: –
dr. by: TARIQ
chk. by:

drawing no.
W13–44

MULLION LOAD CAPACITY – PSF
SINGLE SPANS WITH OR WITHOUT INTERMEDIATE HORIZONTALS

NOMINAL DIMS.		MULLION 'M1'	MULLION 'M2'	MULLION 'M1A'	MULLION 'M2A'	MULLION 'M1B'	MULLION 'M2B'
WIDTH (W)	FRAME HEIGHT	EXT. (+) INT. (–)	EXT. (+) INT. (–)	EXT. (+) INT. (–)	EXT. (+) INT. (–)	EXT. (+) INT. (–)	EXT. (+) INT. (–)
36"	90"	100.0	100.0	100.0	100.0	100.0	100.0
39"		100.0	100.0	100.0	100.0	100.0	100.0
42"		100.0	100.0	100.0	100.0	100.0	100.0
45"		100.0	100.0	100.0	100.0	100.0	100.0
48"		100.0	100.0	100.0	100.0	100.0	100.0
51"		100.0	100.0	100.0	100.0	100.0	100.0
54"		100.0	100.0	100.0	100.0	100.0	100.0
57"		100.0	100.0	100.0	100.0	100.0	100.0
60"		100.0	100.0	100.0	100.0	100.0	100.0
36"	96"	100.0	100.0	100.0	100.0	100.0	100.0
39"		100.0	100.0	100.0	100.0	100.0	100.0
42"		100.0	100.0	100.0	100.0	100.0	100.0
45"		100.0	100.0	100.0	100.0	100.0	100.0
48"		100.0	100.0	100.0	100.0	100.0	100.0
51"		100.0	100.0	100.0	100.0	100.0	100.0
54"		100.0	100.0	100.0	100.0	100.0	100.0
57"		100.0	100.0	100.0	100.0	100.0	100.0
60"		98.2	100.0	100.0	100.0	100.0	100.0
36"	99–3/4"	100.0	100.0	100.0	100.0	100.0	100.0
39"		100.0	100.0	100.0	100.0	100.0	100.0
42"		100.0	100.0	100.0	100.0	100.0	100.0
45"		100.0	100.0	100.0	100.0	100.0	100.0
48"		100.0	100.0	100.0	100.0	100.0	100.0
51"		100.0	100.0	100.0	100.0	100.0	100.0
54"		100.0	100.0	100.0	100.0	100.0	100.0
57"		95.4	100.0	100.0	100.0	100.0	100.0
60"		90.6	100.0	100.0	100.0	100.0	100.0
36"	102"	100.0	100.0	100.0	100.0	100.0	100.0
39"		100.0	100.0	100.0	100.0	100.0	100.0
42"		100.0	100.0	100.0	100.0	100.0	100.0
45"		100.0	100.0	100.0	100.0	100.0	100.0
48"		100.0	100.0	100.0	100.0	100.0	100.0
51"		100.0	100.0	100.0	100.0	100.0	100.0
54"		94.6	100.0	100.0	100.0	100.0	100.0
57"		89.6	100.0	100.0	100.0	100.0	100.0
60"		85.1	97.2	100.0	100.0	100.0	100.0
36"	108"	100.0	100.0	100.0	100.0	100.0	100.0
39"		100.0	100.0	100.0	100.0	100.0	100.0
42"		100.0	100.0	100.0	100.0	100.0	100.0
45"		95.6	100.0	100.0	100.0	100.0	100.0
48"		89.6	100.0	100.0	100.0	100.0	100.0
51"		84.3	100.0	100.0	100.0	100.0	100.0
54"		79.7	95.8	100.0	100.0	100.0	100.0
57"		75.5	90.7	100.0	100.0	100.0	100.0
60"		71.7	86.2	100.0	100.0	100.0	100.0
36"	114"	100.0	100.0	100.0	100.0	100.0	100.0
39"		93.8	100.0	100.0	100.0	100.0	100.0
42"		87.1	100.0	100.0	100.0	100.0	100.0
45"		81.3	100.0	100.0	100.0	100.0	100.0
48"		76.2	96.2	100.0	100.0	100.0	100.0
51"		71.7	90.5	100.0	100.0	100.0	100.0
54"		67.7	85.5	100.0	100.0	100.0	100.0
57"		64.2	81.0	100.0	100.0	100.0	100.0
60"		61.0	76.9	100.0	100.0	100.0	100.0

MULLION LOAD CAPACITY – PSF
SINGLE SPANS WITH OR WITHOUT INTERMEDIATE HORIZONTALS

NOMINAL DIMS.		MULLION 'M1'	MULLION 'M2'	MULLION 'M1A'	MULLION 'M2A'	MULLION 'M1B'	MULLION 'M2B'
WIDTH (W)	FRAME HEIGHT	EXT. (+) INT. (–)	EXT. (+) INT. (–)	EXT. (+) INT. (–)	EXT. (+) INT. (–)	EXT. (+) INT. (–)	EXT. (+) INT. (–)
36"	120"	87.1	100.0	100.0	100.0	100.0	100.0
39"		80.4	100.0	100.0	100.0	100.0	100.0
42"		74.7	98.6	100.0	100.0	100.0	100.0
45"		69.7	92.1	100.0	100.0	100.0	100.0
48"		65.3	86.3	100.0	100.0	100.0	100.0
51"		–	81.2	100.0	100.0	100.0	100.0
54"		–	76.7	99.9	100.0	100.0	100.0
57"		–	72.7	94.7	100.0	100.0	100.0
60"		–	69.0	89.9	100.0	100.0	100.0
36"	126"	75.3	100.0	100.0	100.0	100.0	100.0
39"		69.5	96.3	100.0	100.0	100.0	100.0
42"		64.5	89.5	100.0	100.0	100.0	100.0
45"		60.2	83.5	100.0	100.0	100.0	100.0
48"		–	78.3	97.1	100.0	100.0	100.0
51"		–	73.7	91.4	100.0	100.0	100.0
54"		–	69.6	86.3	100.0	100.0	100.0
57"		–	65.9	81.8	100.0	100.0	100.0
60"		–	62.6	–	95.4	100.0	100.0
36"	132"	65.4	95.1	100.0	100.0	100.0	100.0
39"		60.4	87.8	100.0	100.0	100.0	100.0
42"		56.1	81.5	96.5	100.0	100.0	100.0
45"		52.4	76.1	90.1	100.0	100.0	100.0
48"		–	71.3	84.4	100.0	100.0	100.0
51"		–	67.1	79.5	100.0	100.0	100.0
54"		–	63.4	75.1	94.8	100.0	100.0
57"		–	60.1	–	89.8	100.0	100.0
60"		–	57.1	–	85.4	97.2	95.1
36"	138"	57.3	83.2	98.5	100.0	100.0	100.0
39"		52.9	76.8	91.0	100.0	100.0	100.0
42"		49.1	71.3	84.5	100.0	100.0	100.0
45"		–	66.6	78.8	99.6	100.0	100.0
48"		–	62.4	73.9	93.4	100.0	100.0
51"		–	58.8	69.6	87.9	100.0	100.0
54"		–	55.5	65.7	83.0	94.6	100.0
57"		–	52.6	–	78.6	89.6	95.7
60"		–	49.9	–	74.7	85.1	91.0
36"	144"	50.4	73.3	86.7	100.0	100.0	100.0
39"		46.5	67.6	80.1	100.0	100.0	100.0
42"		–	62.8	74.3	93.9	100.0	100.0
45"		–	58.6	69.4	87.7	99.9	100.0
48"		–	54.9	65.0	82.2	93.6	100.0
51"		–	51.7	61.2	77.3	88.1	100.0
54"		–	48.8	–	73.1	83.2	96.6
57"		–	46.3	–	69.2	78.8	90.5
60"		–	44.0	–	65.7	–	85.0
36"	150"	44.6	64.8	76.7	96.9	100.0	100.0
39"		41.2	59.8	70.8	89.5	100.0	100.0
42"		–	55.6	65.8	83.1	94.7	100.0
45"		–	51.9	61.4	77.6	88.4	100.0
48"		–	48.6	57.5	72.7	82.8	98.0
51"		–	45.8	–	68.4	78.0	92.2
54"		–	43.2	–	64.6	73.6	87.1
57"		–	40.9	–	61.2	–	82.5
60"		–	38.9	–	58.2	–	78.4

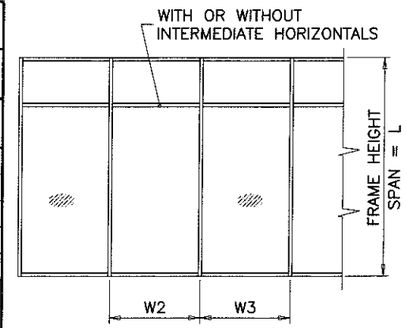

$$\text{WIDTH (W) AT FRAME MULLION} = \frac{W2 + W3}{2}$$

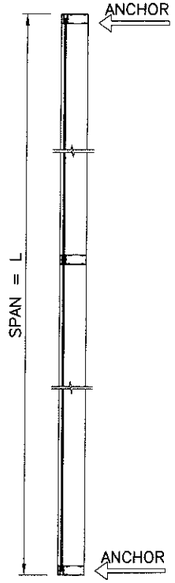

SINGLE SPAN

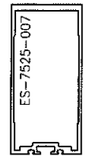

MULLION 'M1'

Ix IN^4	Sx IN^3
8.8201	3.3166

MULLION 'M2'

Ix IN^4	Sx IN^3
12.8176	3.7763

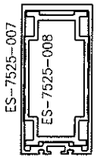

MULLION 'M1A'

Ix IN^4	Sx IN^3
15.1742	5.7059

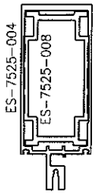

MULLION 'M2A'

Ix IN^4	Sx IN^3
19.1717	5.6484

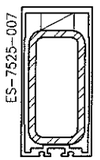

MULLION 'M1B'

	Ix IN^4	Sx IN^3
ALUMINUM	8.8201	3.3166
STEEL	4.4900	2.2500
TOTAL Ix ALUM + Ix STL X 2.9	21.8411	

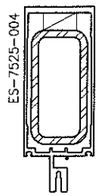

MULLION 'M2B'

	Ix IN^4	Sx IN^3
ALUMINUM	12.8175	3.7763
STEEL	4.4900	2.2500
TOTAL Ix ALUM + Ix STL X 2.9	25.8386	

REINF. LENGTH = MULL LENGTH–6"

Engr: JAVAD AHMAD
CIVIL
FLA. PE # 70592
C.A.N. 3538

JUL 25 2016

PRODUCT REVISED
as complying with the Florida Building Code
Acceptance No 16-0823.10
Expiration Date Feb.14,2018
By Manuel Perez
Miami Dade Product Control

AL-FAROOQ CORPORATION
ENGINEERS & PRODUCT DEVELOPMENT
9360 SUNSET DRIVE, SUITE 220
MIAMI, FLORIDA 33173
TEL. (305) 264-8100 FAX. (305) 262-6978

COMP-ANL\W13-44MG

SERIES MG-7000 ALUM CURTAIN WALL SYSTEM (L.M.I.)

MR. GLASS DOORS & WINDOWS INC.
8120 N.W. 84 STREET
MEDLEY, FL. 33166
TEL. (305) 470-8285 FAX. (305) 470-8284

revisions:			
no	date	by	description
A	07.21.16		UPDATED TO 2014 FBC

date: 09-16-13
scale: –
dr. by: TARIQ
chk. by:

drawing no.
W13-44

JAMB LOAD CAPACITY – PSF TWIN SPANS			
NOMINAL DIMS.		JAMB 'J1'	JAMB 'J2'
AVG. MULL SPACING	SPAN = L	EXT. (+) INT.(–)	EXT. (+) INT.(–)
36"	108"	100.0	100.0
40"		100.0	100.0
42"		100.0	100.0
48"		100.0	100.0
50"		100.0	100.0
54"		100.0	100.0
60"		100.0	100.0
36"	114"	100.0	100.0
40"		100.0	100.0
42"		100.0	100.0
48"		100.0	100.0
50"		100.0	100.0
54"		100.0	100.0
60"		100.0	100.0
36"	120"	100.0	100.0
40"		100.0	100.0
42"		100.0	100.0
48"		100.0	100.0
50"		100.0	100.0
54"		100.0	100.0
60"		100.0	100.0
36"	126"	100.0	100.0
40"		100.0	100.0
42"		100.0	100.0
48"		100.0	100.0
50"		100.0	100.0
54"		100.0	100.0
60"		100.0	100.0
36"	132"	100.0	100.0
40"		100.0	100.0
42"		100.0	100.0
48"		100.0	100.0
50"		100.0	100.0
54"		100.0	100.0
60"		97.1	100.0
36"	138"	100.0	100.0
40"		100.0	100.0
42"		100.0	100.0
48"		100.0	100.0
50"		100.0	100.0
54"		98.7	100.0
60"		88.8	100.0
36"	144"	100.0	100.0
40"		100.0	100.0
42"		100.0	100.0
48"		94.0	100.0
50"		97.9	100.0
54"		90.7	100.0
60"		81.6	94.2
36"	150"	100.0	100.0
40"		100.0	100.0
42"		100.0	100.0
48"		94.0	100.0
50"		90.2	100.0
54"		83.6	96.8

JAMBS TWIN SPAN TABLES

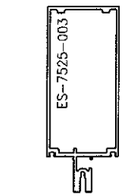

JAMB 'J1'

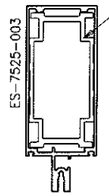

JAMB 'J2'

ES-7525-008
40" LONG
AT INTERMEDIATE ANCHORS

Ix IN^4	Sx IN^3
10.0003	2.9374

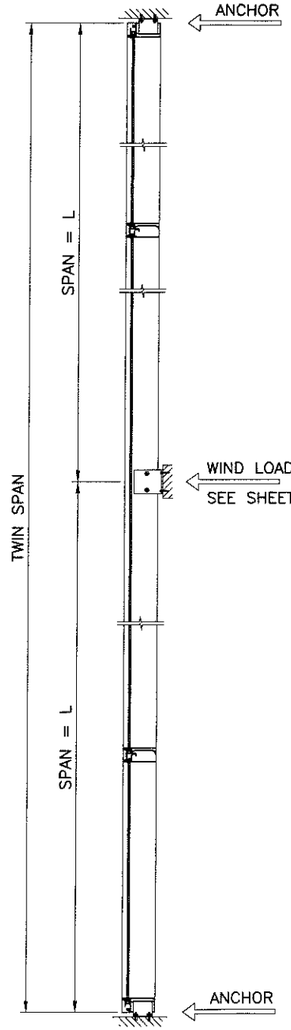

TWO SPAN

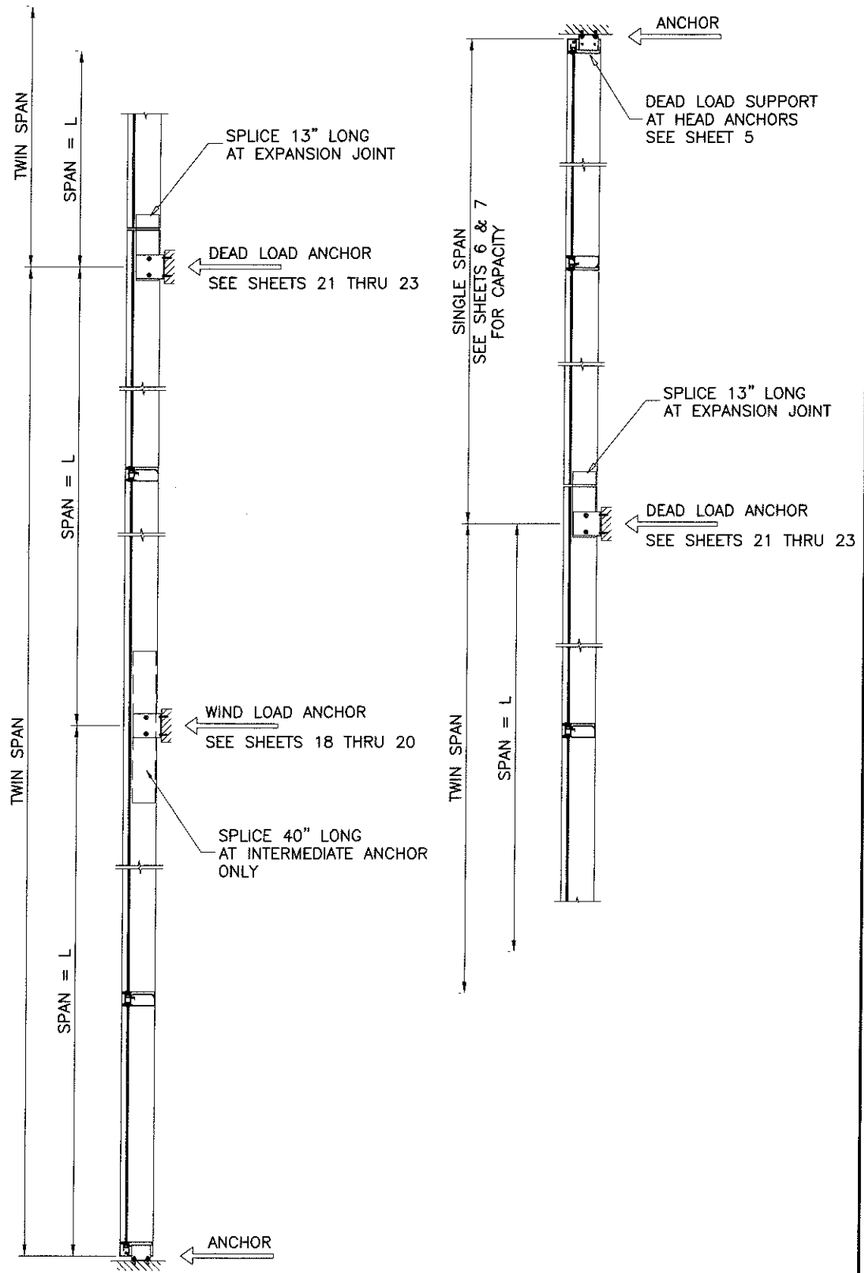

MULTIPLE SPANS

NOTE:
THIS TABLE IS APPLICABLE FOR TWIN SPANS
FOR SINGLE SPAN CAPACITY SEE TABLES ON SHEETS 6 & 7.

Engr: JAVAD AHMAD
CIVIL
FLA. PE # 70592
C.A.N. 3538

JUL 25 2016

PRODUCT REVISED
as complying with the Florida Building Code
Acceptance No 16-0809.10
Expiration Date Feb. 14, 2018
By Manuel Perez
Miami Dade Product Control

AL-FAROOQ CORPORATION
ENGINEERS & PRODUCT DEVELOPMENT
9360 SUNSET DRIVE, SUITE 220
MIAMI, FLORIDA 33173
TEL. (305) 264-8100 FAX. (305) 262-6978

COMP-ANL\W13-44MG

SERIES MG-7000 ALUM CURTAIN WALL SYSTEM (L.M.I.)

MR. GLASS DOORS & WINDOWS INC.
8120 N.W. 84 STREET
MEDLEY, FL. 33166
TEL. (305) 470-8284 FAX. (305) 470-8285

revisions:

no	date	by	description
A	07.21.16		UPDATED TO 2014 FBC

date: 09-16-13
scale: –
dr. by: TARIQ
chk. by:

drawing no.
W13-44

MULLION LOAD CAPACITY – PSF TWIN SPANS			
NOMINAL DIMS.		MULLION 'M1'	MULLION 'M2'
AVG. MULL SPACING	SPAN = L	EXT. (+) INT.(–)	EXT. (+) INT.(–)
36"	108"	100.0	100.0
40"		100.0	100.0
42"		100.0	100.0
48"		100.0	100.0
50"		–	100.0
54"		–	100.0
60"		–	94.4
36"	114"	100.0	100.0
40"		100.0	100.0
42"		100.0	100.0
48"		100.0	100.0
50"		–	100.0
54"		–	99.4
60"		–	89.4
36"	120"	100.0	100.0
40"		100.0	100.0
42"		100.0	100.0
48"		99.9	100.0
50"		–	100.0
54"		–	94.5
60"		–	85.0
36"	126"	100.0	100.0
40"		100.0	100.0
42"		100.0	100.0
48"		–	100.0
50"		–	100.0
54"		–	90.0
60"		–	81.0
36"	132"	100.0	100.0
40"		100.0	100.0
42"		100.0	100.0
48"		–	100.0
50"		–	96.7
54"		–	86.0
60"		–	77.4
36"	138"	100.0	100.0
40"		100.0	100.0
42"		–	100.0
48"		–	100.0
50"		–	92.6
54"		–	82.3
60"		–	74.0
36"	144"	100.0	100.0
40"		100.0	100.0
42"		–	100.0
48"		–	100.0
50"		–	88.8
54"		–	78.9
60"		–	71.0
36"	150"	100.0	100.0
40"		–	100.0
42"		–	100.0
48"		–	94.1
50"		–	82.3
54"		–	73.2

NOTE:
THIS TABLE IS APPLICABLE FOR TWIN SPANS
FOR SINGLE SPAN CAPACITY SEE TABLES ON SHEETS 6 & 7.

UN–REINFORCED MULLION TWIN SPAN TABLES

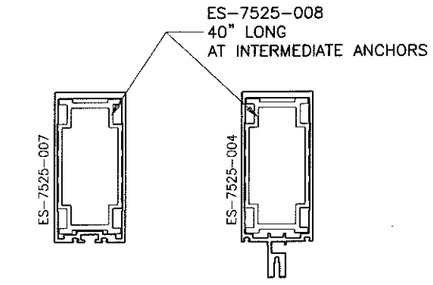

MULLION 'M1'

Ix IN^4	Sx IN^3
8.8201	3.3166

MULLION 'M2'

Ix IN^4	Sx IN^3
12.8176	3.7763

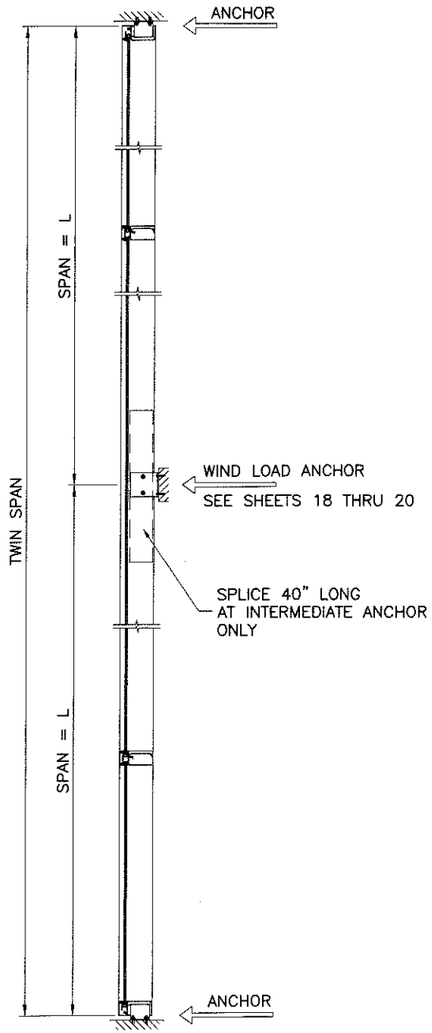

TWO SPAN

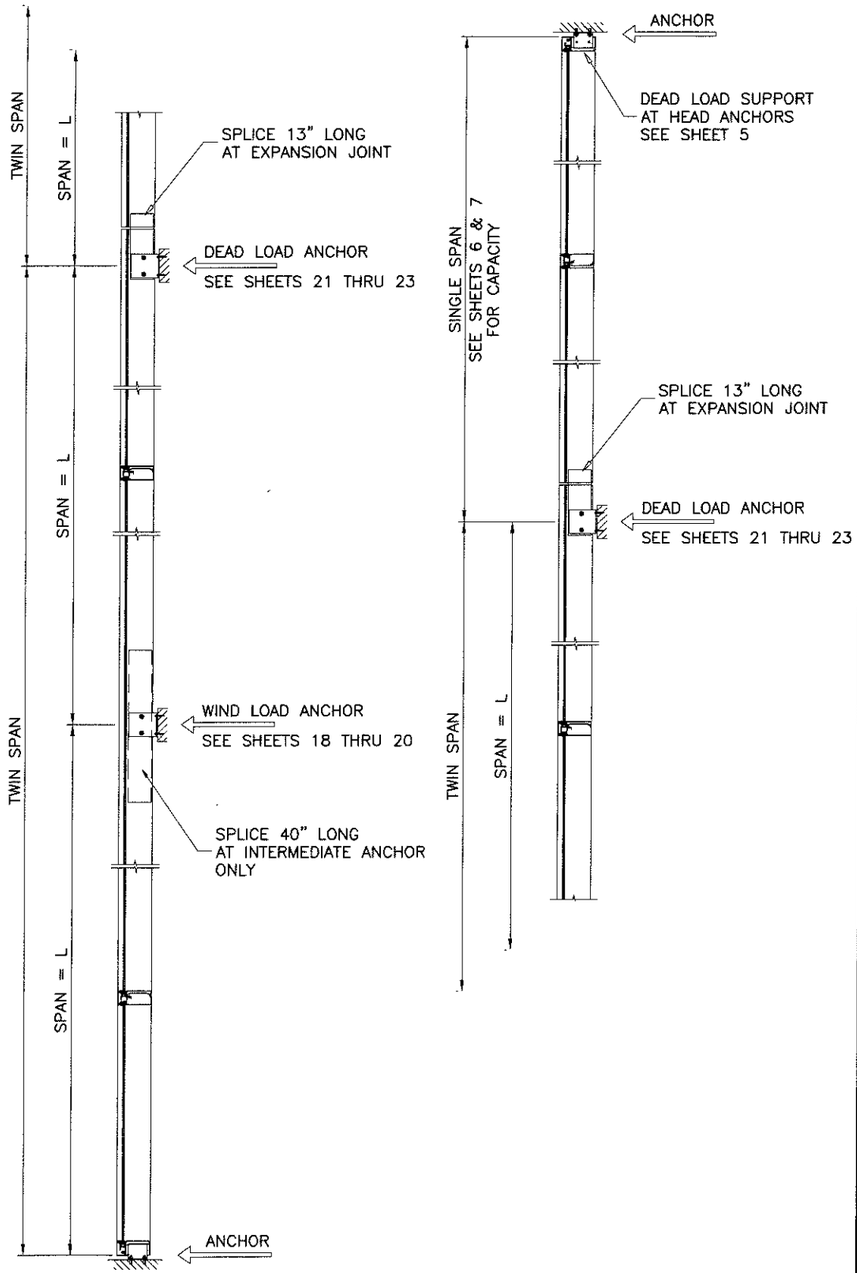

MULTIPLE SPANS

Engr: JAVAD AHMAD
CIVIL
FLA. PE # 70592
C.A.N. 3538

JUL 25 2016

PRODUCT REVISED
as complying with the Florida
Building Code
Acceptance No 16-0308.10
Expiration Date ~~Feb 14, 2018~~
By Manuel Perez
Miami-Dade Product Control

AL-FAROOQ CORPORATION
ENGINEERS & PRODUCT DEVELOPMENT
9360 SUNSET DRIVE, SUITE 220
MIAMI, FLORIDA 33173
TEL. (305) 264-8100 FAX. (305) 262-6978

COMP-ANL\W13-44MG

SERIES MG-7000 ALUM CURTAIN WALL SYSTEM (L.M.I.)

MR. GLASS DOORS & WINDOWS INC.
8120 N.W. 84 STREET
MEDLEY, FL. 33166
TEL. (305) 470-8284 FAX. (305) 470-8285

revisions:			
no	date	by	description
A	07.21.16		UPDATED TO 2014 FBC

date: 09-16-13
scale: -
dr. by: TARIQ
chk. by:

drawing no.
W13-44

MULLION LOAD CAPACITY - PSF TWIN SPANS				
NOMINAL DIMS.		MULLION 'M1A'	MULLION 'M1B'	MULLION 'M2B'
AVG. MULL SPACING	SPAN = L	EXT. (+) INT.(−)	EXT. (+) INT.(−)	EXT. (+) INT.(−)
36"	108"	100.0	100.0	100.0
40"		100.0	100.0	100.0
42"		100.0	100.0	100.0
48"		100.0	100.0	100.0
50"		100.0	100.0	100.0
54"		100.0	100.0	100.0
60"		100.0	100.0	100.0
36"	114"	100.0	100.0	100.0
40"		100.0	100.0	100.0
42"		100.0	100.0	100.0
48"		100.0	100.0	100.0
50"		100.0	100.0	100.0
54"		100.0	100.0	100.0
60"		99.7	100.0	100.0
36"	120"	100.0	100.0	100.0
40"		100.0	100.0	100.0
42"		100.0	100.0	100.0
48"		100.0	100.0	100.0
50"		100.0	100.0	100.0
54"		100.0	100.0	100.0
60"		94.7	100.0	100.0
36"	126"	100.0	100.0	100.0
40"		100.0	100.0	100.0
42"		100.0	100.0	100.0
48"		100.0	100.0	100.0
50"		100.0	100.0	100.0
54"		100.0	100.0	100.0
60"		–	100.0	100.0
36"	132"	100.0	100.0	100.0
40"		100.0	100.0	100.0
42"		100.0	100.0	100.0
48"		100.0	100.0	100.0
50"		100.0	100.0	100.0
54"		95.7	100.0	100.0
60"		–	100.0	100.0
36"	138"	100.0	100.0	100.0
40"		100.0	100.0	100.0
42"		100.0	100.0	100.0
48"		100.0	100.0	100.0
50"		98.8	100.0	100.0
54"		–	100.0	100.0
60"		–	100.0	100.0
36"	144"	100.0	100.0	100.0
40"		100.0	100.0	100.0
42"		100.0	100.0	100.0
48"		98.7	100.0	100.0
50"		94.7	100.0	100.0
54"		–	100.0	100.0
60"		–	96.1	100.0
36"	150"	100.0	100.0	100.0
40"		100.0	100.0	100.0
42"		100.0	100.0	100.0
48"		91.3	100.0	100.0
50"		–	100.0	100.0
54"		–	98.8	100.0

REINFORCED MULLION TWIN SPAN TABLES

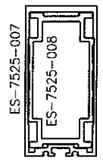

MULLION 'M1A'

Ix IN^4	Sx IN^3
15.1742	5.7059

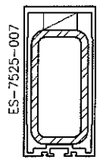

MULLION 'M1B'

	Ix IN^4	Sx IN^3
ALUMINUM	8.8201	3.3166
STEEL	4.4900	2.2500
TOTAL Ix ALUM + Ix STL X 2.9	21.8411	

REINF. LENGTH = MULL LENGTH−6"

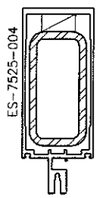

MULLION 'M2B'

	Ix IN^4	Sx IN^3
ALUMINUM	12.8175	3.7763
STEEL	4.4900	2.2500
TOTAL Ix ALUM + Ix STL X 2.9	25.8386	

REINF. LENGTH = MULL LENGTH−6"

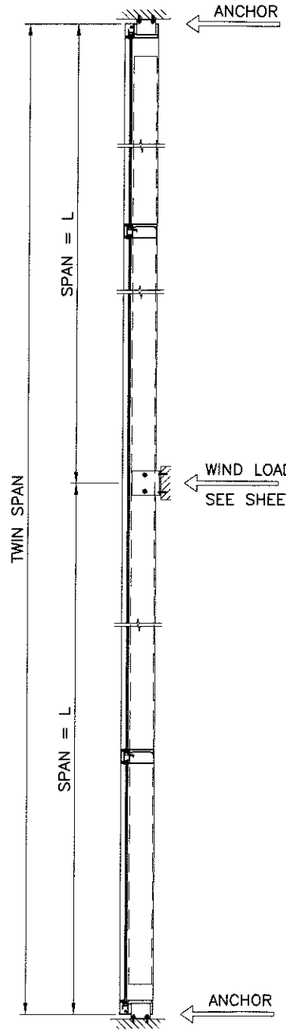

TWO SPAN

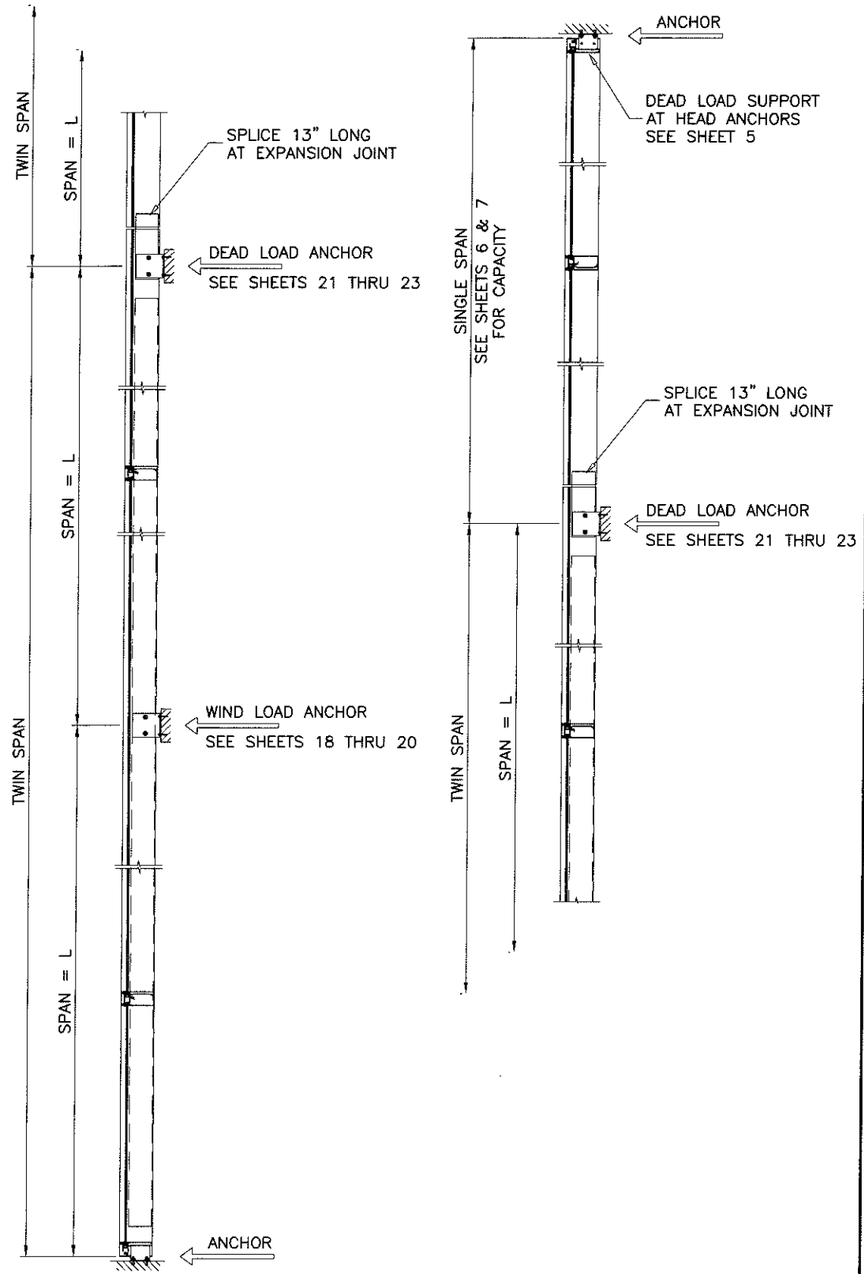

MULTIPLE SPANS

NOTE:
THIS TABLE IS APPLICABLE FOR TWIN SPANS
FOR SINGLE SPAN CAPACITY SEE TABLES ON SHEETS 6 & 7.

Engr: JAVAD AHMAD
CIVIL
FLA. PE # 70592
C.A.N. 3538

JUL 25 2016

PRODUCT REVISED
as complying with the Florida
Building Code
Acceptance No 16-0503.10
Expiration Date Feb.14,2018
By Manuel Perez
Miami-Dade Product Control

AL-FAROOQ CORPORATION
ENGINEERS & PRODUCT DEVELOPMENT
9360 SUNSET DRIVE, SUITE 220
MIAMI, FLORIDA 33173
TEL. (305) 264-8100 FAX. (305) 262-6978

COMP-ANL\W13-44MG

SERIES MG-7000 ALUM CURTAIN WALL SYSTEM (L.M.I.)

MR. GLASS DOORS & WINDOWS INC.
8120 N.W. 84 STREET
MEDLEY, FL. 33166
TEL. (305) 470-8284 FAX. (305) 470-8285

revisions:			
no	date	by	description
A	07.21.16		UPDATED TO 2014 FBC

date: 09-16-13
scale: –
dr. by: TARIQ
chk. by:

drawing no.
W13-44

CORNER MULLION W/O REINFORCING
SINGLE SPAN WITH OR WITHOUT HORIZONTAL

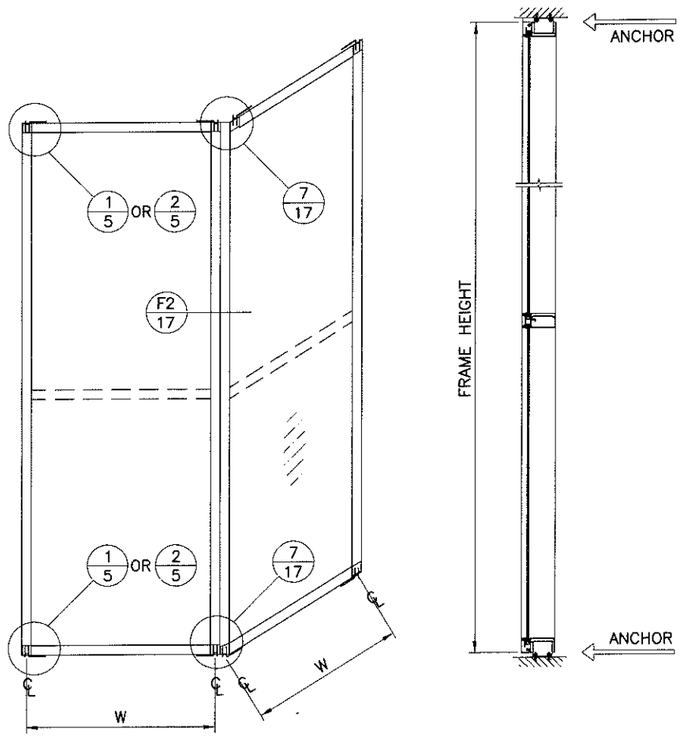

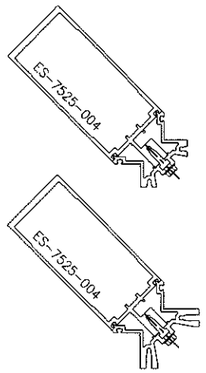

CORNER MULLION

WIDTH-W INCHES	FRAME HEIGHT INCHES	DESIGN LOAD CAPACITY PSF
42	120	97.1
48	120	85.0
54	120	75.5
60	120	68.0

CORNER MULLION WITH REINFORCING
SINGLE SPAN WITH OR WITHOUT HORIZONTAL

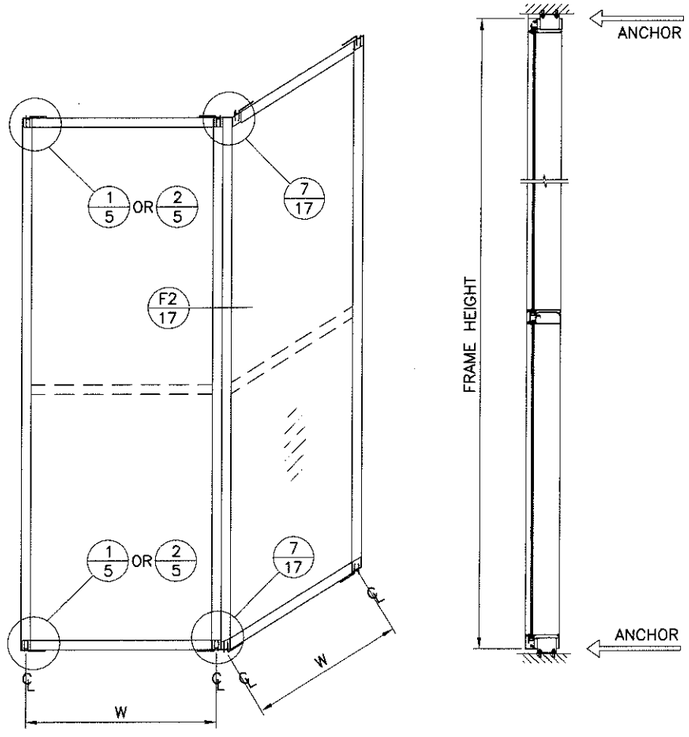

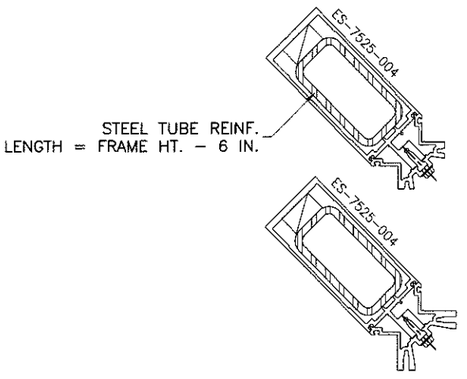

CORNER MULLION
W/ STEEL REINF.

WIDTH-W INCHES	FRAME HEIGHT INCHES	DESIGN LOAD CAPACITY PSF
48	150	100.0
52	150	100.0
60	150	93.0
60	144	100.0

NOTE:
USE 'F' ANCHOR CLIP DETAIL (1/5) AT JAMB AND
'T' ANCHOR CLIP DETAIL (2/5) AT MULLION

Engr: JAVAD AHMAD
CIVIL
FLA. PE # 70592
C.A.N. 3538
JUL 25 2016

PRODUCT REVISED
as complying with the Florida Building Code
Acceptance No 16-0809.10
Expiration Date Feb. 14, 2018
By Miami Dade Product Control

AL-FAROOQ CORPORATION
ENGINEERS & PRODUCT DEVELOPMENT
9360 SUNSET DRIVE, SUITE 220
MIAMI, FLORIDA 33173
TEL. (305) 264-8100 FAX. (305) 262-6978

COMP-ANL\W13-44MG

SERIES MG-7000 ALUM CURTAIN WALL SYSTEM (L.M.I.)

MR. GLASS DOORS & WINDOWS INC.
8120 N.W. 84 STREET
MEDLEY, FL. 33166
TEL. (305) 470-8284 FAX. (305) 470-8285

revisions:

no	date	by	description
A	07.21.16		UPDATED TO 2014 FBC

date: 09-16-13
scale: –
dr. by: TARIQ
chk. by:

drawing no.
W13-44

CORNER MULLION W/ ALUM REINF. AT ANCHOR LOCATION
TWIN SPAN WITH OR WITHOUT HORIZONTAL

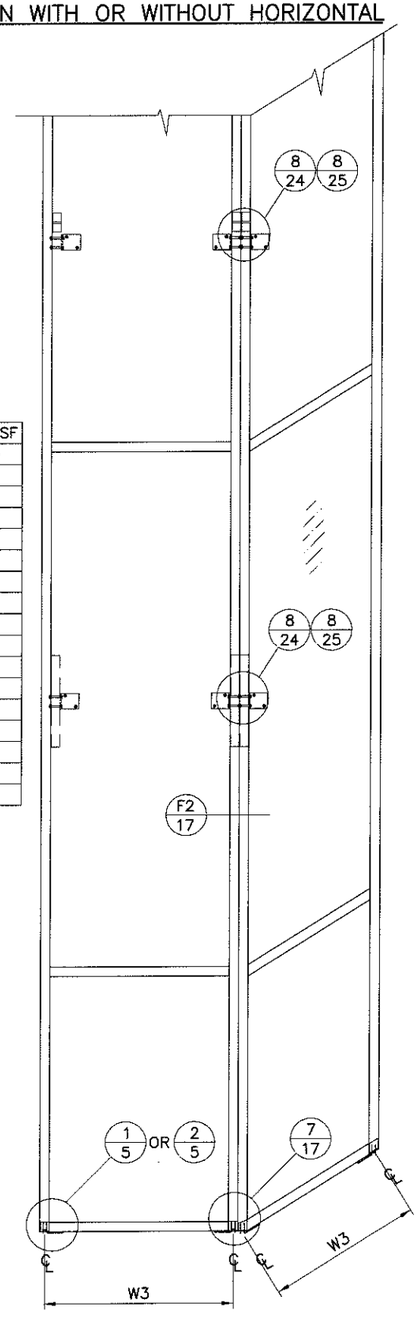

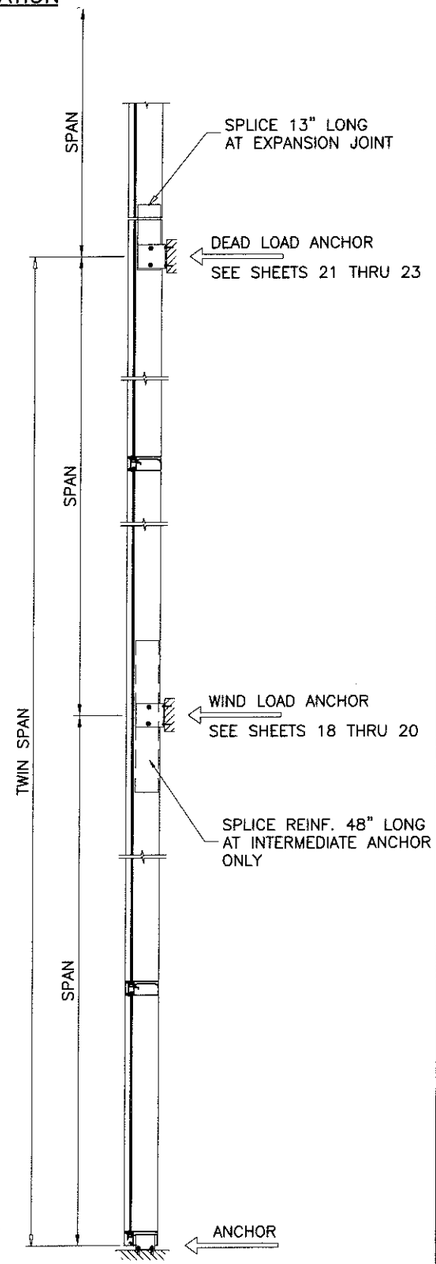

W3	SPAN	Pd – PSF
48 IN.	120 IN.	100.0
54 IN.		88.9
60 IN.		80.0
48 IN.	126 IN.	95.2
54 IN.		84.7
60 IN.		76.2
48 IN.	132 IN.	90.9
54 IN.		80.8
60 IN.		72.7
48 IN.	138 IN.	87.0
54 IN.		77.3
60 IN.		69.6
48 IN.	144 IN.	83.3
54 IN.		74.1
60 IN.		66.7
48 IN.	150 IN.	80.0
54 IN.		71.1

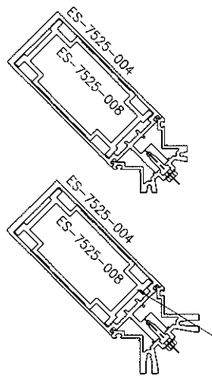

ALUM SPLICE
LENGTH = 48 IN.

CORNER MULLION
W/ ALUM REINF.

CORNER MULLION WITH STEEL REINF. AT ANCHOR LOCATION
TWIN SPAN WITH OR WITHOUT HORIZONTAL

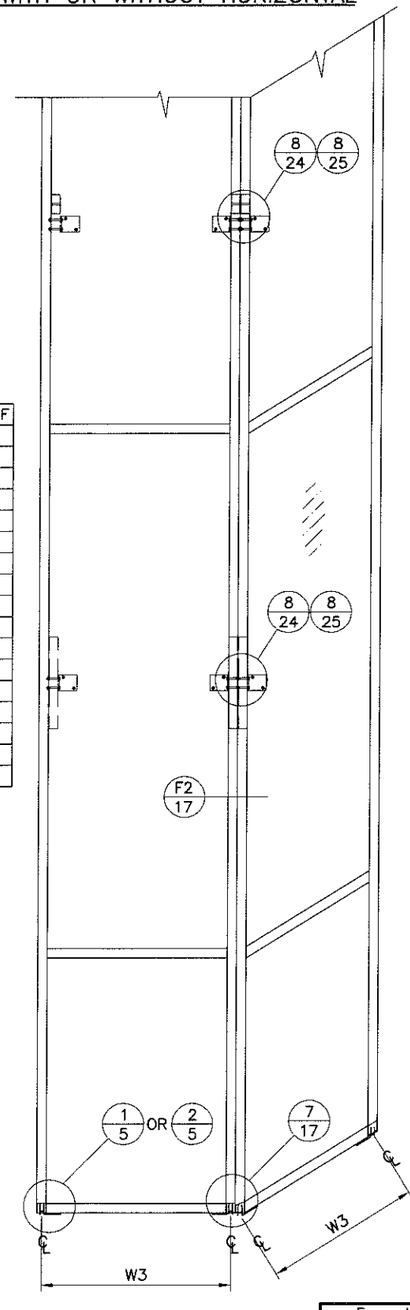

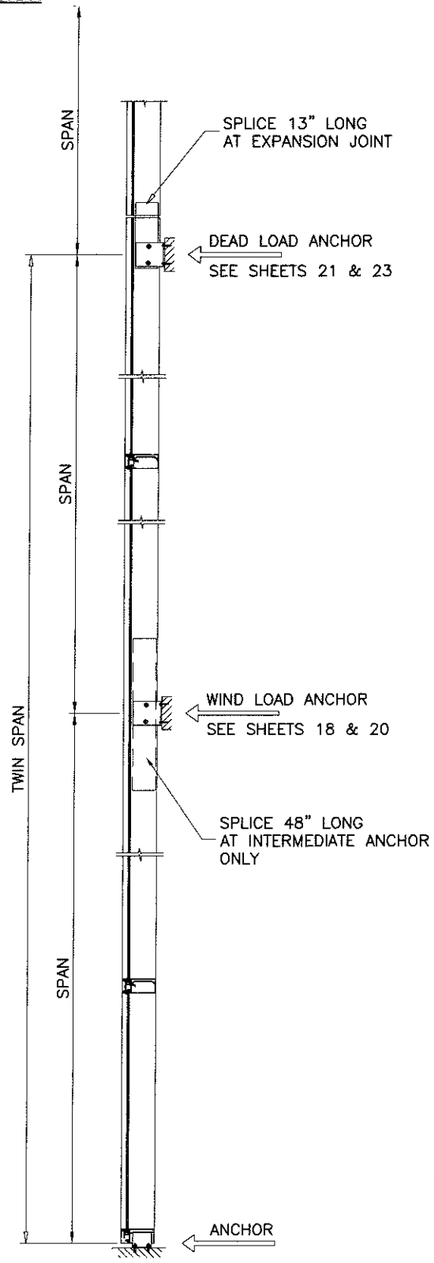

W3	SPAN	Pd – PSF
48 IN.	120 IN.	100.0
54 IN.		100.0
60 IN.		100.0
48 IN.	126 IN.	100.0
54 IN.		100.0
60 IN.		95.2
48 IN.	132 IN.	100.0
54 IN.		100.0
60 IN.		90.9
48 IN.	138 IN.	100.0
54 IN.		96.6
60 IN.		87.0
48 IN.	144 IN.	100.0
54 IN.		92.6
60 IN.		83.3
48 IN.	150 IN.	100.0
54 IN.		88.9

2 X 4 X 1/4"
STEEL TUBE SPLICE
LENGTH – 48 IN.

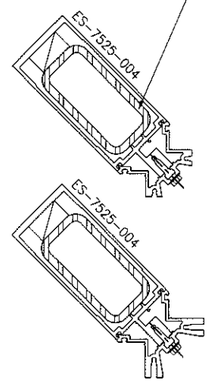

CORNER MULLION
W/ STEEL REINF.

NOTE:
USE 'F' ANCHOR CLIP DETAIL (1/5) AT JAMB AND
'T' ANCHOR CLIP DETAIL (2/5) AT MULLION

Engr: JAVAD AHMAD
CIVIL
FLA. PE # 70592
C.A.N. 3538

JUL 25 2016

PRODUCT REVISED
as complying with the Florida
Building Code
Acceptance No 16-0808.10
Expiration Date Feb. 14, 2018
By Manuel Perez
Miami-Dade Product Control

AL-FAROOQ CORPORATION
ENGINEERS & PRODUCT DEVELOPMENT
9360 SUNSET DRIVE, SUITE 220
MIAMI, FLORIDA 33173
TEL. (305) 264-8100 FAX. (305) 262-6978
COMP-ANL\W13-44MG

SERIES MG-7000 ALUM CURTAIN WALL SYSTEM (L.M.I.)

MR. GLASS DOORS & WINDOWS INC.
8120 N.W. 84 STREET
MEDLEY, FL. 33166
TEL. (305) 470-8285 FAX. (305) 470-8284

revisions:

no	date	by	description
A	07.21.16		UPDATED TO 2014 FBC

date: 09-16-13
scale: –
dr. by: TARIQ
chk. by:

drawing no.
W13-44

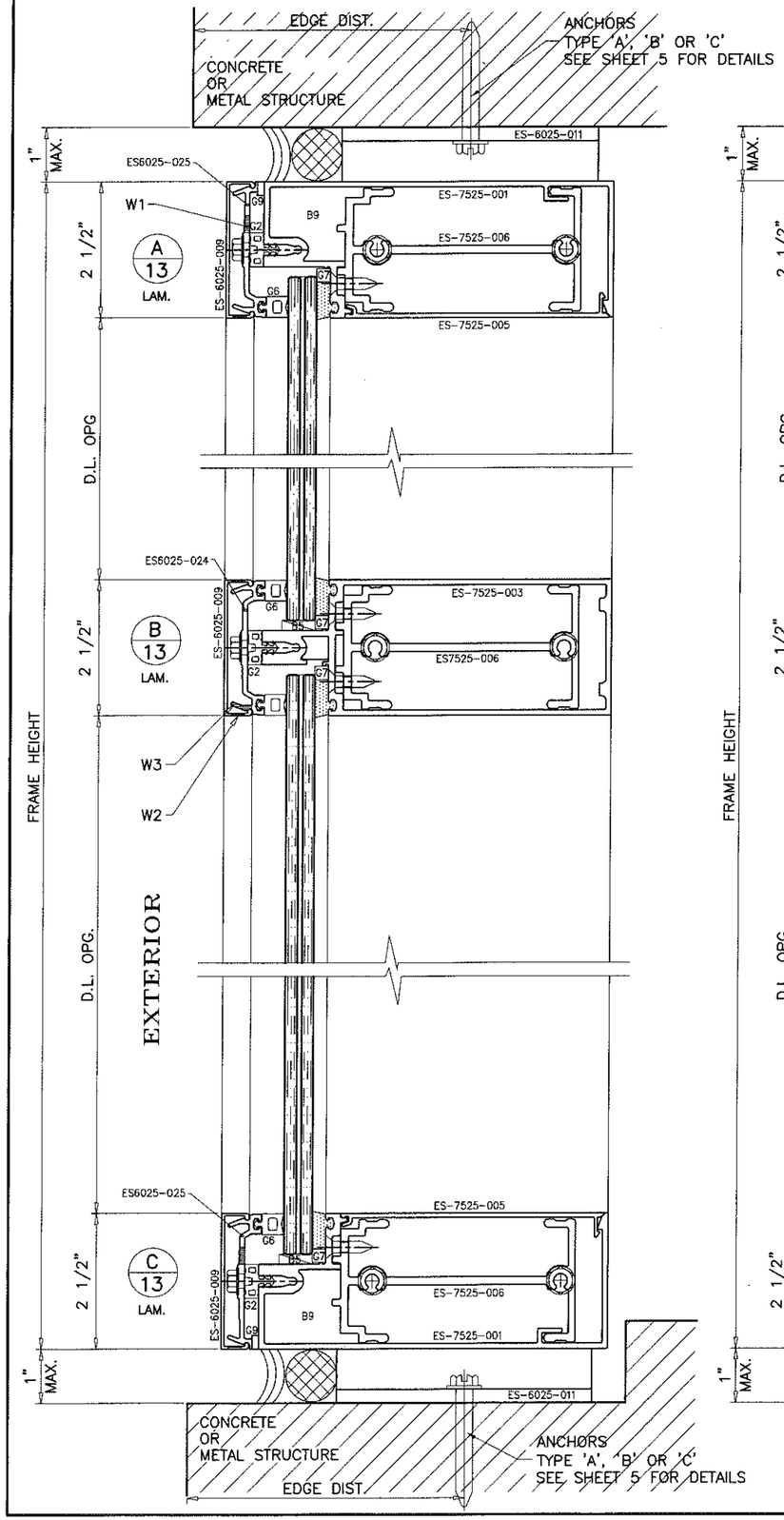

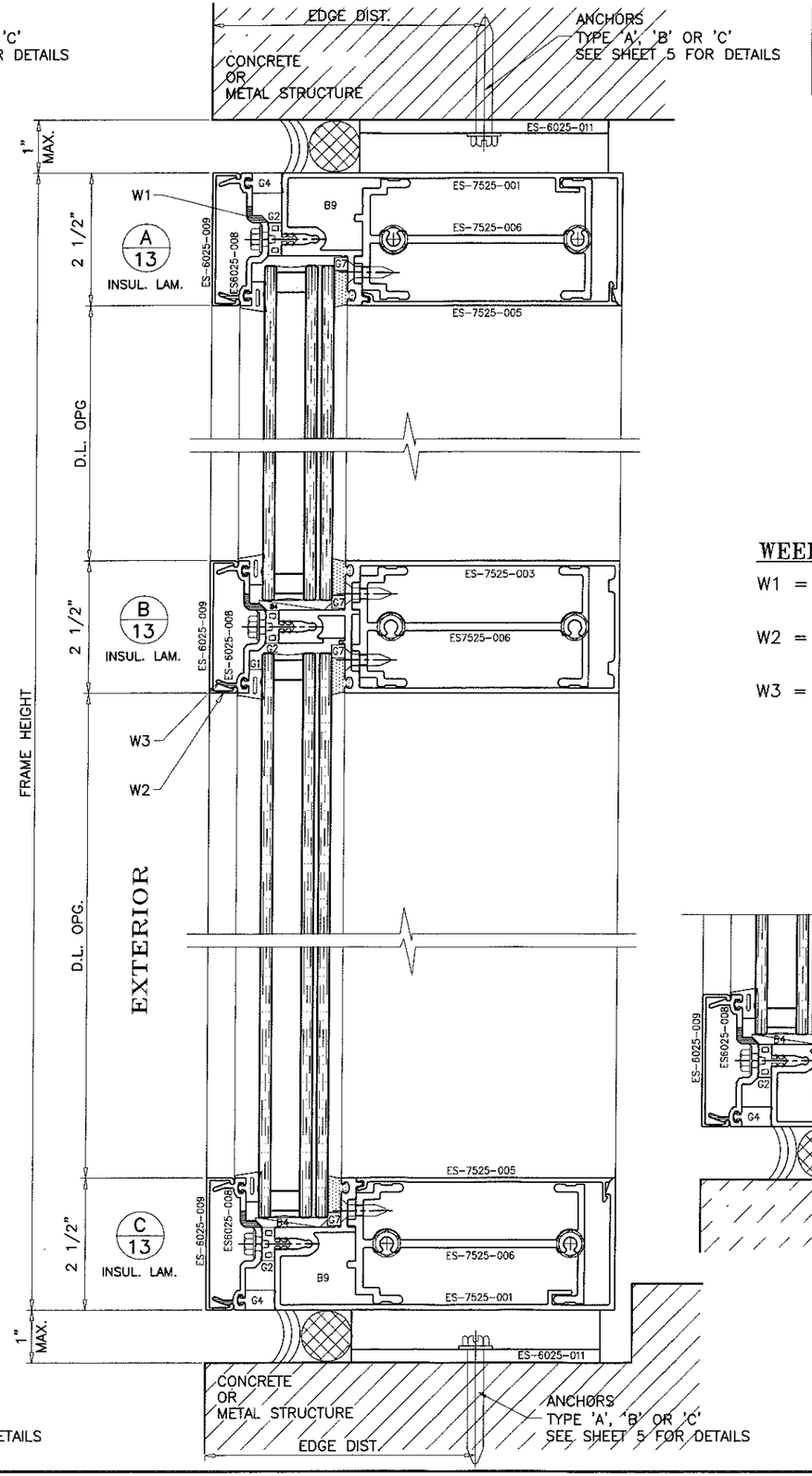

CONCRETE AND METAL STRUCTURE NOT BY MR GLASS MUST SUSTAIN LOADS IMPOSED BY GLAZING SYSTEM AND TRANSFER THEM TO THE BUILDING STRUCTURE.

WEEPHOLES:

W1 = 5/16" DIA. WEEP HOLES TWO PER D.L. OPNG. AT 1/3 POINTS FROM VERTICALS

W2 = 1/4" DIA. WEEP HOLES THREE PER LITE AT 3" FROM VERTICALS AND CENTER OF D.L. OPNG.

W3 = 1/2" WIDE WEEP NOTCH THREE PER LITE AT 3" FROM VERTICALS AND CENTER OF D.L. OPNG.

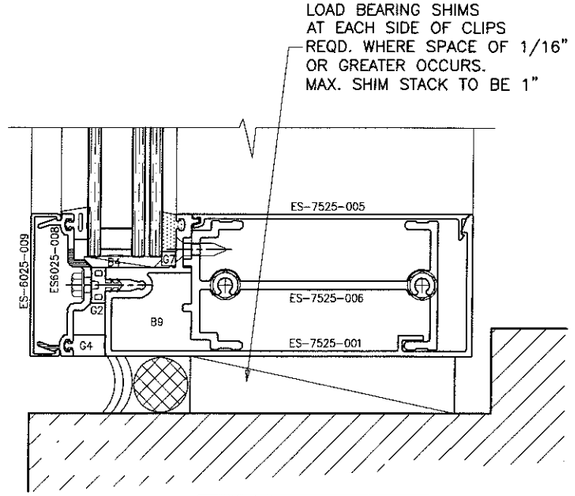

Engr: JAVAD AHMAD
CIVIL
FLA. PE # 70592
C.A.N. 3538

JUL 25 2016

PRODUCT REVISED
as complying with the Florida
Building Code
Acceptance No 16-0808.10
Expiration Date Feb. 14, 2018
By Manuel Perez
Miami Dade Product Control

AL-FAROOQ CORPORATION
ENGINEERS & PRODUCT DEVELOPMENT
9360 SUNSET DRIVE, SUITE 220
MIAMI, FLORIDA 33173
TEL. (305) 264-8100 FAX. (305) 262-6978

COMP-ANL\W13-44MG

SERIES MG-7000 ALUM CURTAIN WALL SYSTEM (L.M.I.)

MR. GLASS DOORS & WINDOWS INC.
8120 N.W. 84 STREET
MEDLEY, FL. 33166
TEL. (305) 470-8284 FAX. (305) 470-8285

revisions:

no	date	by	description
A	07.21.16		UPDATED TO 2014 FBC

date: 09-16-13
scale: 3/8" = 1"
dr. by: TARIQ
chk. by:

drawing no.
W13-44

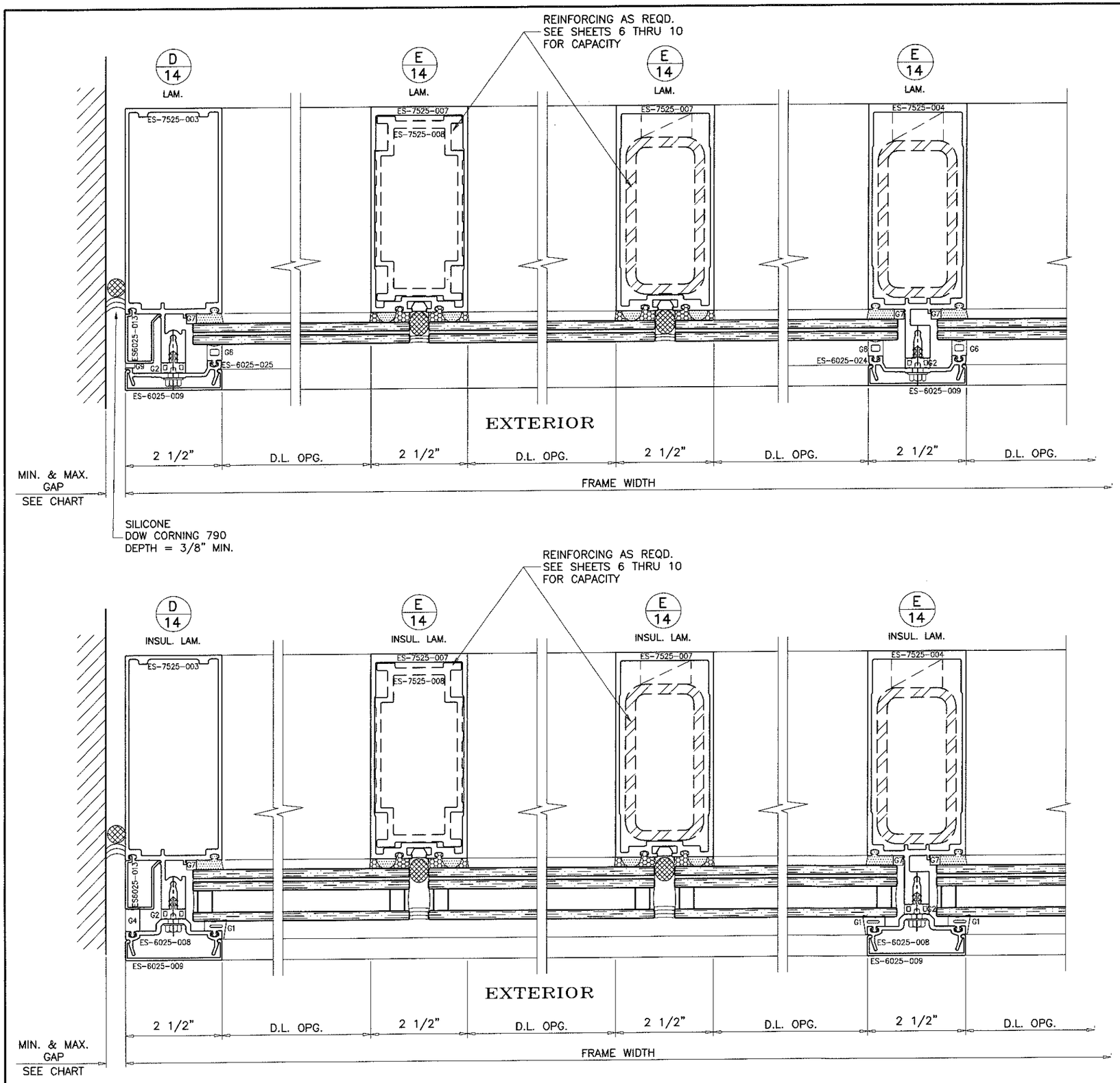

MAX. FRAME HEIGHT	GAP MIN.	GAP MAX.
84"	1/4"	1"
96"	5/16"	1"
108"	11/32"	1"
120"	3/8"	1"
132"	7/16"	1"
144"	15/32"	1"
150"	1/2"	1"

ALTERNATE SEALANTS AT JAMB GAPS CAN BE DESIGNED BY ENGINEER OF RECORD BASED ON MANUFACTURER GUIDE LINES.

Engr: JAVAD AHMAD
CIVIL
FLA. PE # 70592
C.A.N. 3538

JUL 25 2016

PRODUCT REVISED
as complying with the Florida Building Code
Acceptance No 16-0808.10
Expiration Date Feb. 14, 2018
By Manuel Perez
Miami Dade Product Control

AL-FAROOQ CORPORATION
ENGINEERS & PRODUCT DEVELOPMENT
9360 SUNSET DRIVE, SUITE 220
MIAMI, FLORIDA 33173
TEL. (305) 264-8100 FAX. (305) 262-6978

COMP-ANL\W13-44MG

SERIES MG-7000 ALUM CURTAIN WALL SYSTEM (L.M.I.)

MR. GLASS DOORS & WINDOWS INC.
8120 N.W. 84 STREET
MEDLEY, FL. 33166
TEL. (305) 470-8284 FAX. (305) 470-8285

revisions:

no	date	by	description
A	07.21.16		UPDATED TO 2014 FBC

date: 09-16-13
scale: 3/8" = 1"
dr. by: TARIQ
chk. by:

drawing no.
W13-44

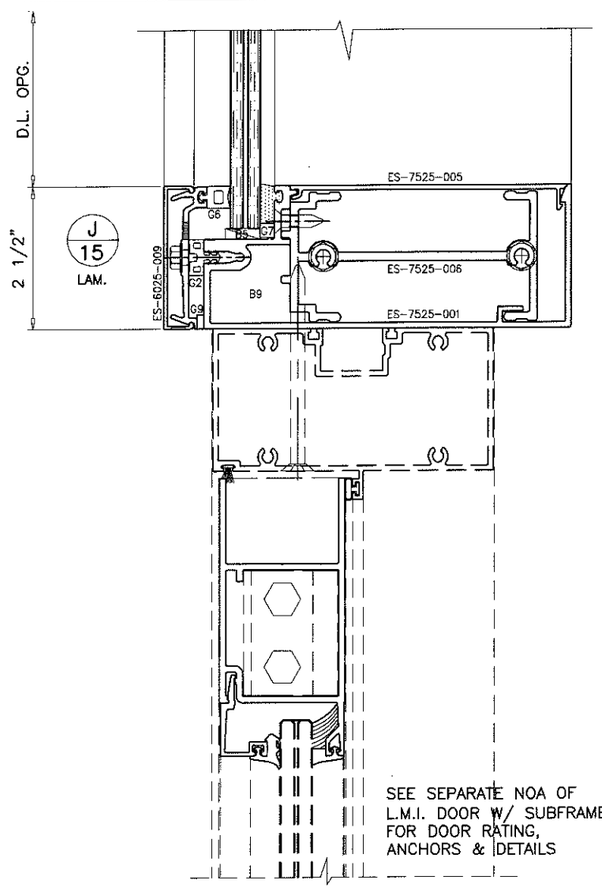

SEE SEPARATE NOA OF L.M.I. DOOR W/ SUBFRAME FOR DOOR RATING, ANCHORS & DETAILS

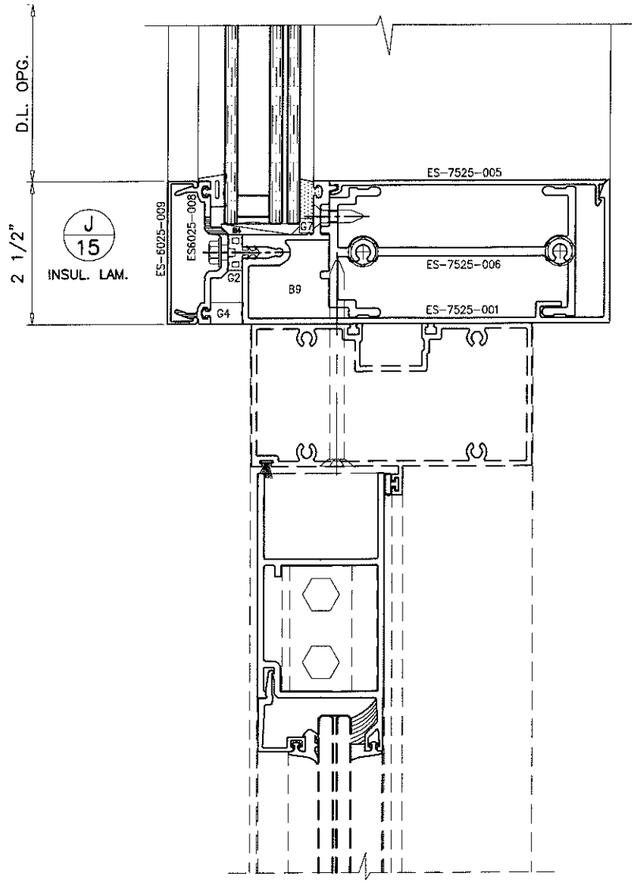

CONCRETE AND METAL STRUCTURE NOT BY MR GLASS MUST SUSTAIN LOADS IMPOSED BY GLAZING SYSTEM AND TRANSFER THEM TO THE BUILDING STRUCTURE.

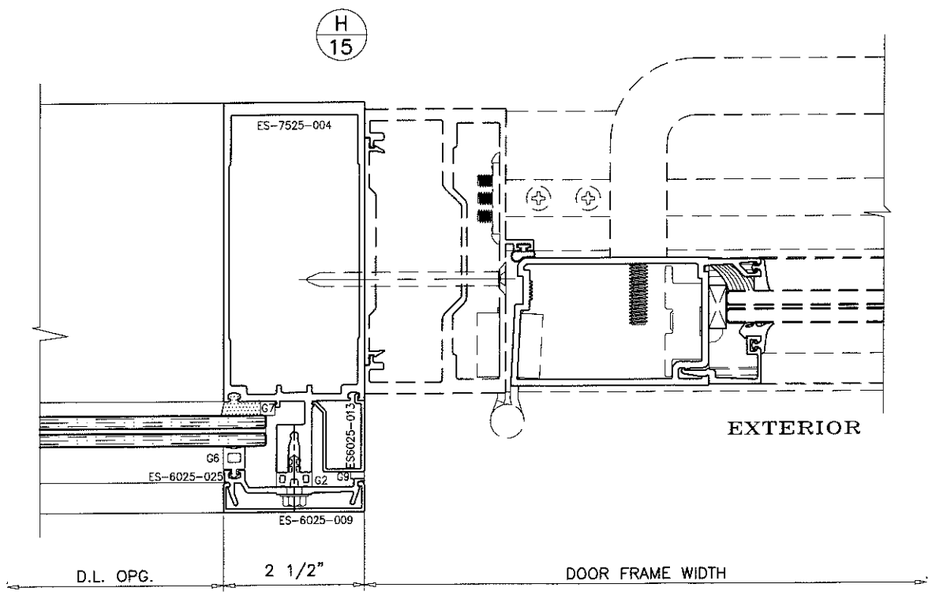

Engr: JAVAD AHMAD
CIVIL
FLA. PE # 70592
C.A.N. 3538

JUL 25 2016

PRODUCT REVISED
as complying with the Florida Building Code
Acceptance No 16-0803.10
Expiration Date Feb. 14, 2018
By Manuel Perez
Miami-Dade Product Control

AL-FAROOQ CORPORATION
ENGINEERS & PRODUCT DEVELOPMENT
9360 SUNSET DRIVE, SUITE 220
MIAMI, FLORIDA 33173
TEL. (305) 264-8100 FAX. (305) 262-6978

COMP-ANL\W13-44MG

SERIES MC-7000 ALUM CURTAIN WALL SYSTEM (L.M.I.)

MR. GLASS DOORS & WINDOWS INC.
8120 N.W. 84 STREET
MEDLEY, FL. 33166
TEL. (305) 470-8284 FAX. (305) 470-8285

revisions:

no	date	by	description
A	07.21.16		UPDATED TO 2014 FBC

date: 09-16-13
scale: 3/8" = 1"
dr. by: TARIQ
chk. by:

drawing no.
W13-44

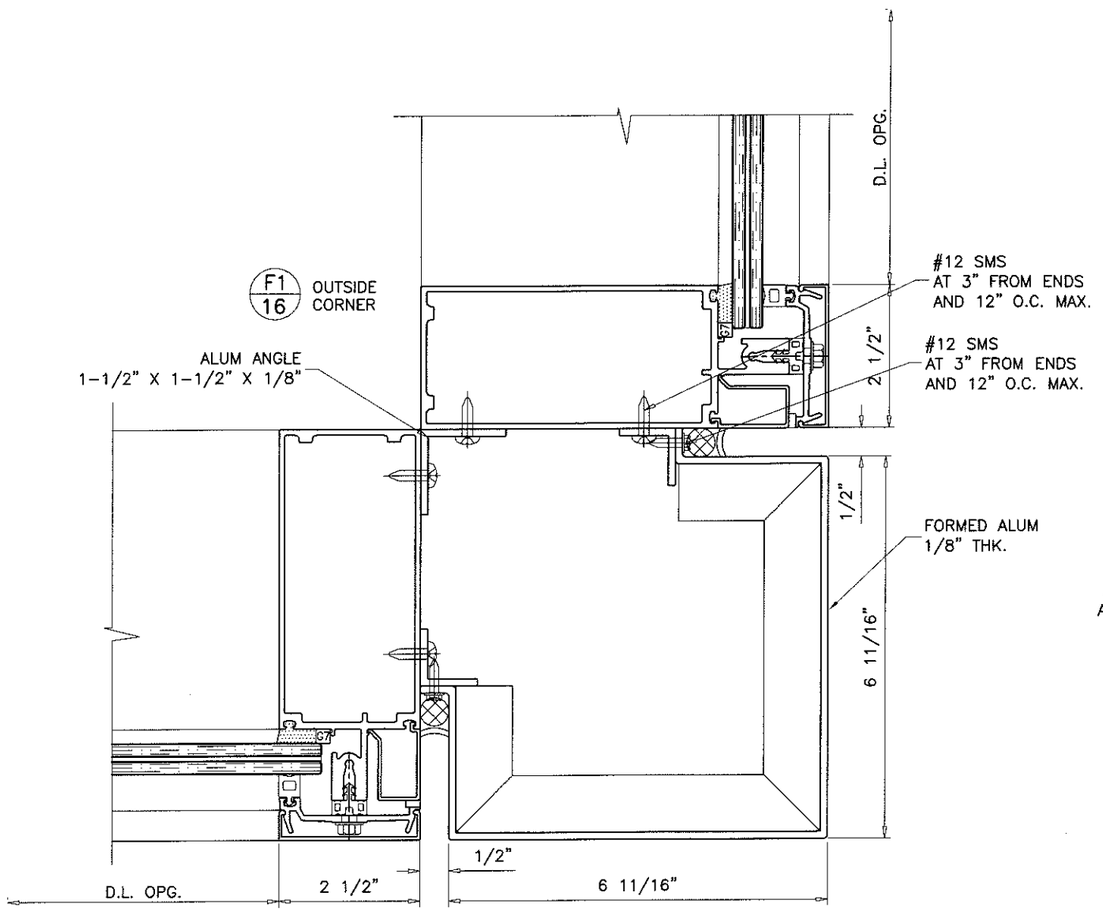

FOR MULLION CAPACITY
SINGLE SPAN SEE SHEET 6
TWIN SPANS SEE SHEET 8

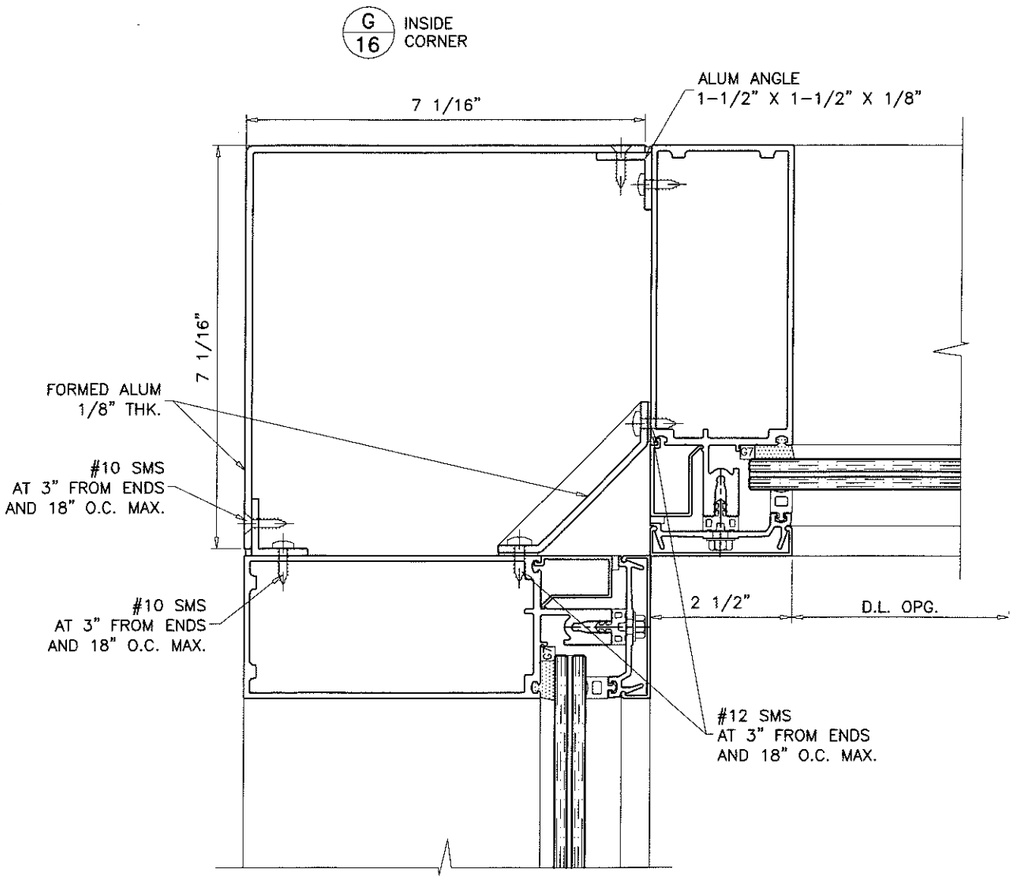

FOR MULLION CAPACITY
SINGLE SPAN SEE SHEET 6
TWIN SPANS SEE SHEET 8

Engr: JAVAD AHMAD
CIVIL
FLA. PE # 70592
C.A.N. 3538
JUL 25 2016

PRODUCT REVISED
as complying with the Florida
Building Code
Acceptance No 16-0808.10
Expiration Date Feb. 14, 2018
By Manuel Perez
Miami/Dade Product Control

AL-FAROOQ CORPORATION
ENGINEERS & PRODUCT DEVELOPMENT
9360 SUNSET DRIVE, SUITE 220
MIAMI, FLORIDA 33173
TEL. (305) 264-8100 FAX. (305) 262-6978

COMP-ANL\W13-44MG

SERIES MG-7000 ALUM CURTAIN WALL SYSTEM (L.M.I.)

MR. GLASS DOORS & WINDOWS INC.
8120 N.W. 84 STREET
MEDLEY, FL. 33166
TEL. (305) 470-8284 FAX. (305) 470-8285

revisions:

no	date	by	description
A	07.21.16		UPDATED TO 2014 FBC

date: 09-16-13
scale: 3/8" = 1"
dr. by: TARIQ
chk. by:

drawing no.
W13-44

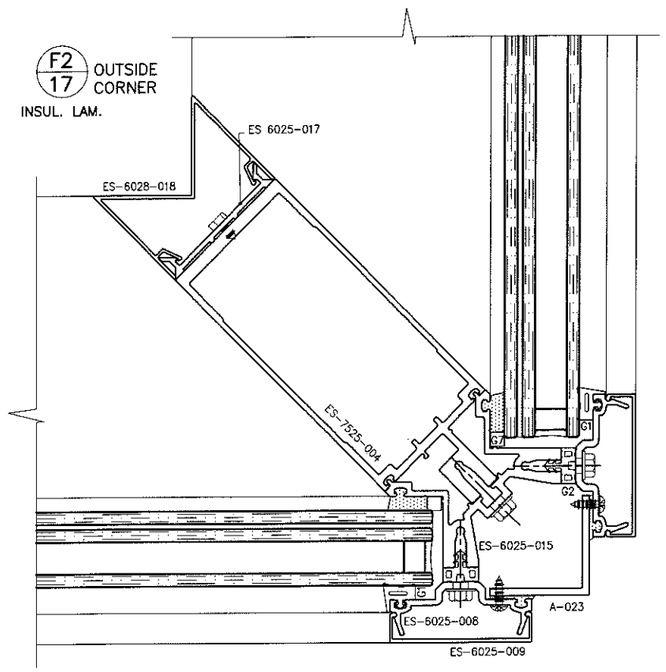

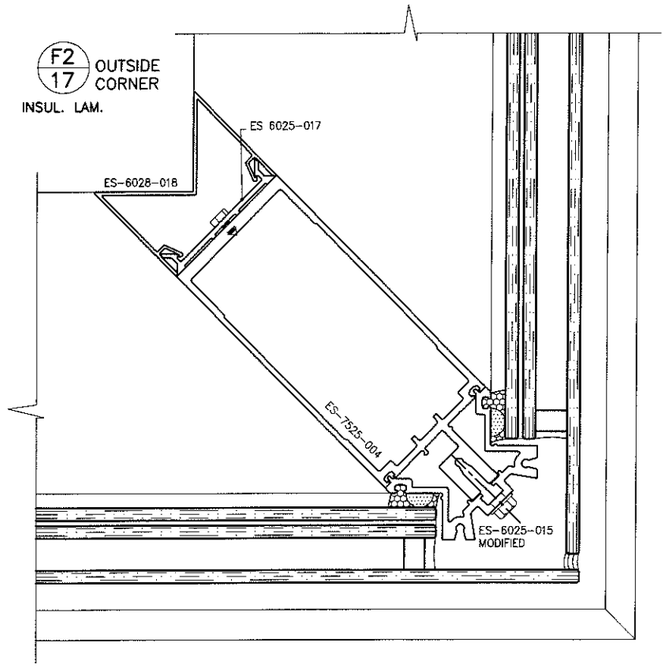

FOR MULLION CAPACITY
SINGLE SPAN SEE SHEET 11
TWIN SPANS SEE SHEET 12

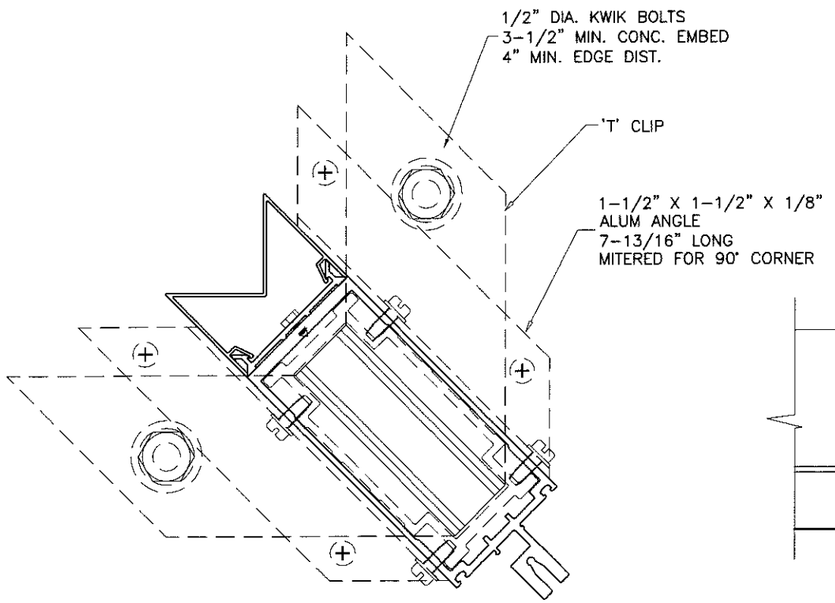

CORNER MULLION ANCHORS
HEAD/SILL
DETAIL '7'

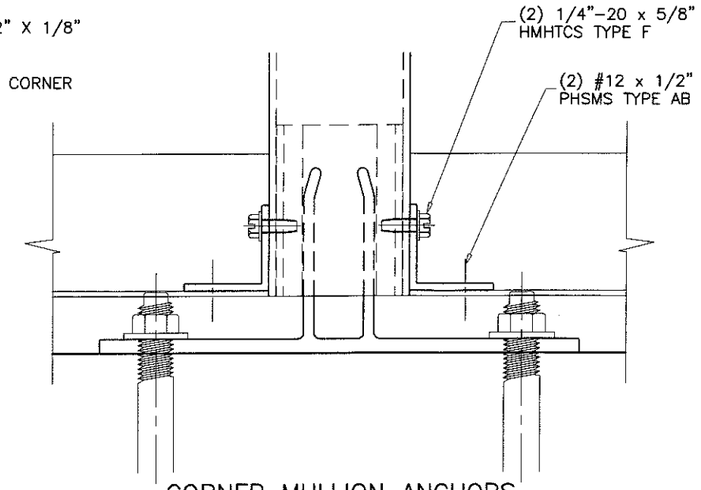

CORNER MULLION ANCHORS
FRONT VIEW

Engr: JAVAD AHMAD
CIVIL
FLA. PE # 70592
C.A.N. 3538
JUL 25 2016

PRODUCT REVISED
as complying with the Florida
Building Code
Acceptance No K-0808.10
Expiration Date Feb. 14, 2018
By Manuel Perez
Miami Dade Product Control

AL-FAROOQ CORPORATION
ENGINEERS & PRODUCT DEVELOPMENT
9360 SUNSET DRIVE, SUITE 220
MIAMI, FLORIDA 33173
TEL. (305) 264-8100 FAX. (305) 262-6978

COMP-ANL\W13-44MG

SERIES MG-7000 ALUM CURTAIN WALL SYSTEM (L.M.I.)

MR. GLASS DOORS & WINDOWS INC.
8120 N.W. 84 STREET
MEDLEY, FL. 33166
TEL. (305) 470-8284 FAX. (305) 470-8285

revisions:

no	date	by	description
A	07.21.16		UPDATED TO 2014 FBC

date: 09-16-13
scale: 3/8" = 1"
dr. by: TARIQ
chk. by:

drawing no.
W13-44

MAX. DESIGN LOAD –PSF DUE TO ANCHOR CAPACITY EXT.(+) & INT.(–)		
NOMINAL DIMS.		1/2" DIA. KWIK BOLT
WIDTH (W)	FRAME HEIGHT	
36"	108"	100.0
40"		100.0
42"		100.0
48"		100.0
50"		100.0
54"		100.0
60"		90.1
36"	114"	100.0
40"		100.0
42"		100.0
48"		100.0
50"		100.0
54"		94.8
60"		85.4
36"	120"	100.0
40"		100.0
42"		100.0
48"		100.0
50"		97.3
54"		90.1
60"		81.1
36"	126"	100.0
40"		100.0
42"		100.0
48"		96.5
50"		92.7
54"		85.8
60"		77.2
36"	132"	100.0
40"		100.0
42"		100.0
48"		92.2
50"		88.5
54"		81.9
60"		73.7
36"	138"	100.0
40"		100.0
42"		100.0
48"		88.1
50"		84.6
54"		78.4
60"		70.5
36"	144"	100.0
40"		100.0
42"		96.5
48"		84.5
50"		81.1
54"		75.1
60"		67.6
36"	150"	100.0
40"		97.3
42"		92.7
48"		81.1
50"		77.8
54"		72.1

NOTE:
FOR SLABS LESS THAN 8 INCHES IN THICKNESS ANCHORS TO BE DESIGNED ON JOB TO JOB BASIS. THE DESIGN TO BE REVIEWED BY AUTHORITY HAVING JURISDICTION.

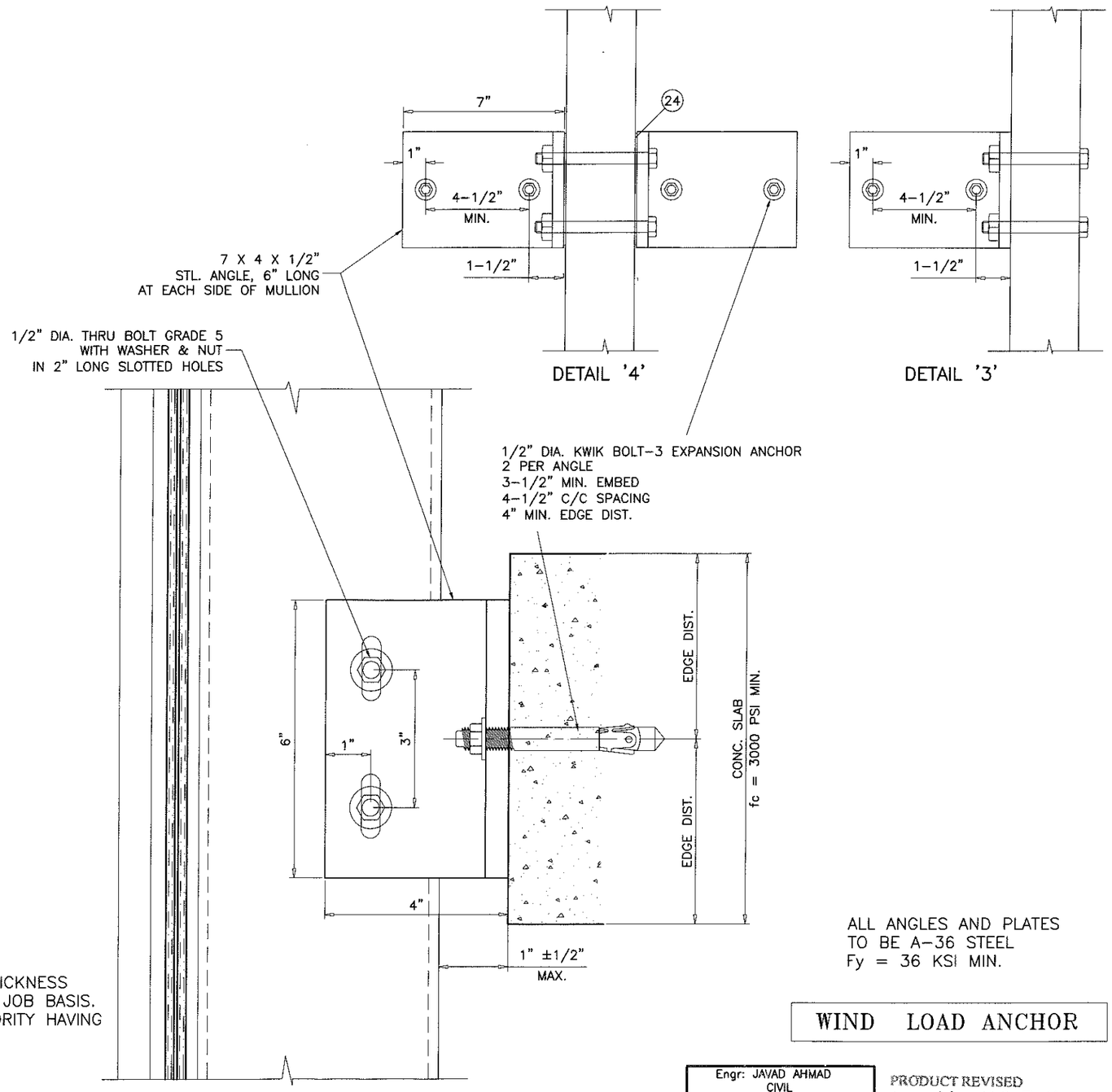

INTERMEDIATE ANCHORS
DETAIL '4' AT CENTER MULLION
DETAIL '3' AT JAMB MULLION

ANCHORS INTO CONCRETE

ALL ANGLES AND PLATES
TO BE A–36 STEEL
Fy = 36 KSI MIN.

WIND LOAD ANCHOR

Engr: JAVAD AHMAD
CIVIL
FLA. PE # 70592
C.A.N. 3538
JUL 25 2016

PRODUCT REVISED
as complying with the Florida
Building Code
Acceptance No 16-0808.10
Expiration Date Feb. 14, 2018
By Manuel Perez
Miami-Dade Product Control

AL-FAROOQ CORPORATION
ENGINEERS & PRODUCT DEVELOPMENT
9360 SUNSET DRIVE, SUITE 220
MIAMI, FLORIDA 33173
TEL. (305) 264-8100 FAX. (305) 262-6978

COMP–ANL\W13–44MG

SERIES MG–7000 ALUM CURTAIN WALL SYSTEM (L.M.I.)

MR. GLASS DOORS & WINDOWS INC.
8120 N.W. 84 STREET
MEDLEY, FL. 33166
TEL. (305) 470–8284 FAX. (305) 470–8285

revisions:			
no	date	by	description
A	07.21.16		UPDATED TO 2014 FBC

date: 09–16–13
scale: 3/8" = 1"
dr. by: TARIQ
chk. by:

drawing no.
W13–44

MAX. DESIGN LOAD = 100 PSF

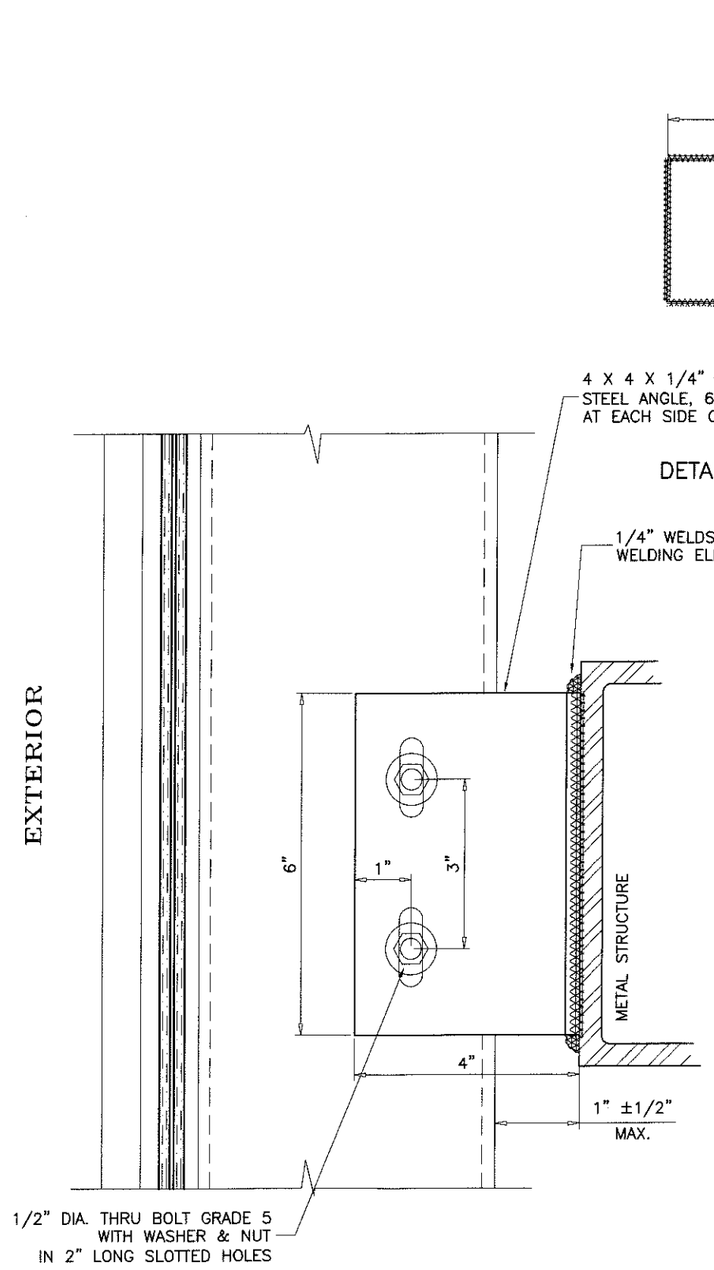

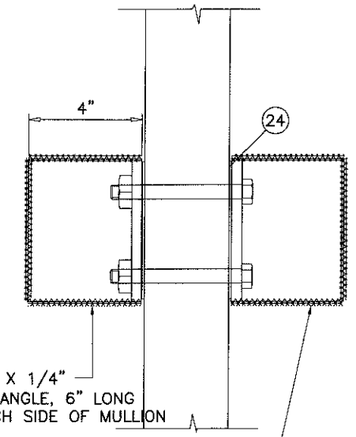

DETAIL '4' (ALT.)

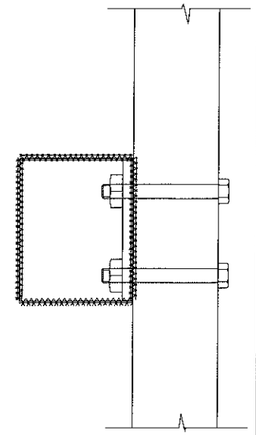

DETAIL '3' (ALT.)

ALL ANGLES AND PLATES
TO BE A-36 STEEL
Fy = 36 KSI MIN.

WIND LOAD ANCHOR

Engr: JAVAD AHMAD
CIVIL
FLA. PE # 70992
C.A.N. 3536
JUL 25 2016

PRODUCT REVISED
as complying with the Florida
Building Code
Acceptance No 16-0803.10
Expiration Date Feb. 14 2018
By Manuel Feria
Miami Dade Product Control

INTERMEDIATE ANCHORS
DETAIL '4' ALT. AT CENTER MULLION
DETAIL '3' ALT. AT JAMB MULLION

ANCHORS INTO METAL STRUCTURES
COMMERCIAL STEEL - 1/4" MIN. THICKNESS

afc
AL-FAROOQ CORPORATION
ENGINEERS & PRODUCT DEVELOPMENT
9360 SUNSET DRIVE, SUITE 220
MIAMI, FLORIDA 33173
TEL. (305) 264-8100 FAX. (305) 262-6978
COMP-ANL\W13-44MG

SERIES MG-7000 ALUM CURTAIN WALL SYSTEM (L.M.I.)

MR. GLASS DOORS & WINDOWS INC.
8120 N.W. 84 STREET
MEDLEY, FL. 33166
TEL. (305) 470-8284 FAX. (305) 470-8285

revisions:

no	date	by	description
A	07.21.16		UPDATED TO 2014 FBC

date: 09-16-13
scale: 3/8" = 1"
dr. by: TARIQ
chk. by:

drawing no.
W13-44

MAX. DESIGN LOAD –PSF DUE TO ANCHOR CAPACITY EXT.(+) & INT.(–)		
NOMINAL DIMS.		1/2" DIA. KWIK BOLT
WIDTH (W)	FRAME HEIGHT	
36"	108"	100.0
40"		100.0
42"		100.0
48"		100.0
50"		100.0
54"		100.0
60"		100.0
36"	114"	100.0
40"		100.0
42"		100.0
48"		100.0
50"		100.0
54"		100.0
60"		100.0
36"	120"	100.0
40"		100.0
42"		100.0
48"		100.0
50"		100.0
54"		100.0
60"		100.0
36"	126"	100.0
40"		100.0
42"		100.0
48"		100.0
50"		100.0
54"		100.0
60"		100.0
36"	132"	100.0
40"		100.0
42"		100.0
48"		100.0
50"		100.0
54"		100.0
60"		98.2
36"	138"	100.0
40"		100.0
42"		100.0
48"		100.0
50"		100.0
54"		100.0
60"		94.0
36"	144"	100.0
40"		100.0
42"		100.0
48"		100.0
50"		100.0
54"		100.0
60"		90.0
36"	150"	100.0
40"		100.0
42"		100.0
48"		100.0
50"		100.0
54"		96.1

NOTE:
FOR SLABS LESS THAN 8 INCHES IN THICKNESS ANCHORS TO BE DESIGNED ON JOB TO JOB BASIS. THE DESIGN TO BE REVIEWED BY AUTHORITY HAVING JURISDICTION.

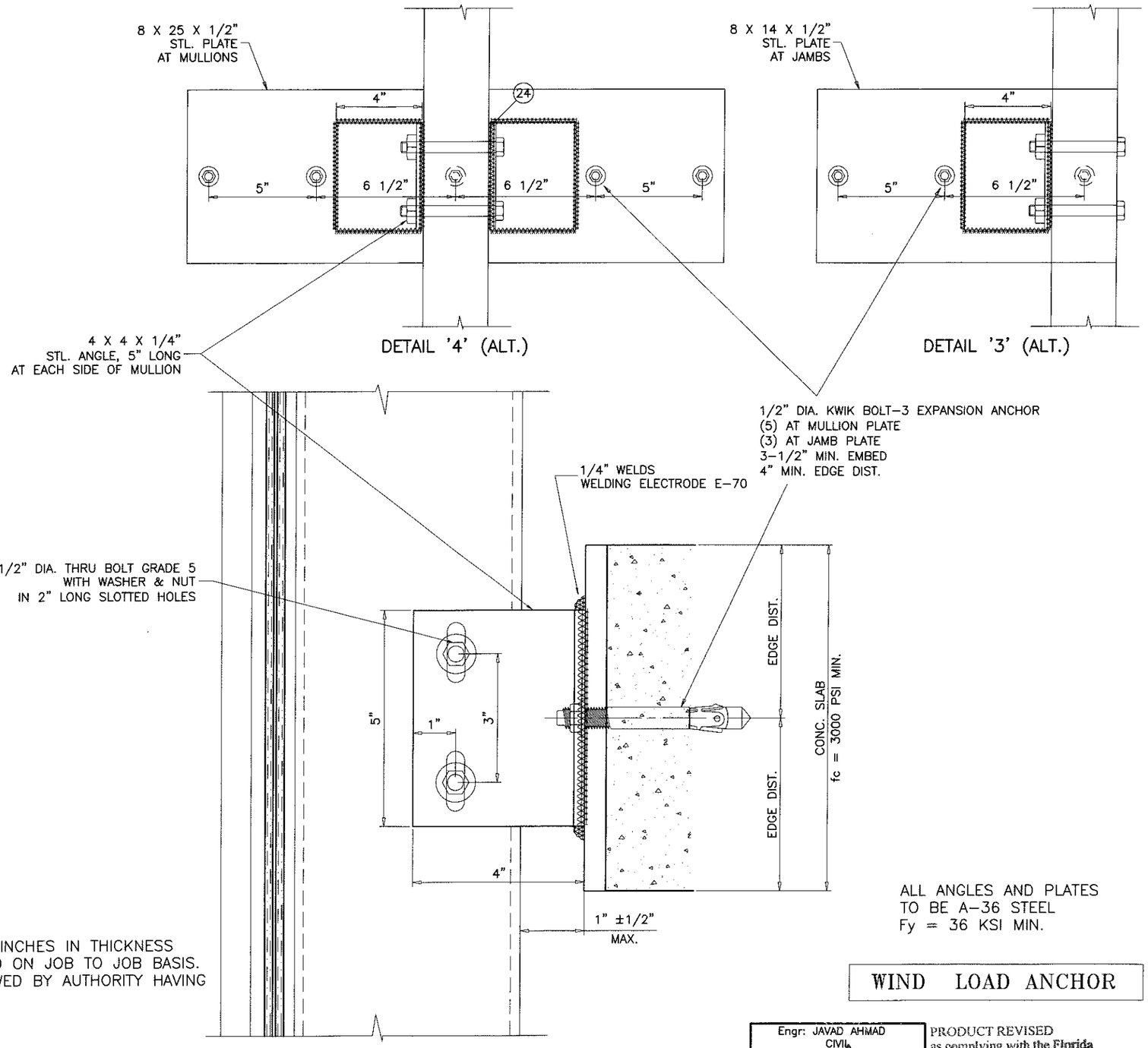

ALL ANGLES AND PLATES TO BE A-36 STEEL
Fy = 36 KSI MIN.

INTERMEDIATE ANCHORS
DETAIL '4' AT CENTER MULLION
DETAIL '3' AT JAMB MULLION

ANCHORS INTO CONCRETE

WIND LOAD ANCHOR

Engr: JAVAD AHMAD
CIVIL
FLA. PE # 70592
C.A.N. 3538

JUL 25 2016

PRODUCT REVISED
as complying with the Florida Building Code
Acceptance No 16-0908.10
Expiration Date Feb. 14, 2018
By Manuel Cera
Miami Dade Product Control

AL-FAROOQ CORPORATION
ENGINEERS & PRODUCT DEVELOPMENT
9360 SUNSET DRIVE, SUITE 220
MIAMI, FLORIDA 33173
TEL. (305) 264-8100 FAX. (305) 262-6978

COMP-ANL\W13-44MG

SERIES MG-7000 ALUM CURTAIN WALL SYSTEM (L.M.I.)

MR. GLASS DOORS & WINDOWS INC.
8120 N.W. 84 STREET
MEDLEY, FL. 33166
TEL. (305) 470-8284 FAX. (305) 470-8285

revisions:		
no	date	by description
A	07.21.16	UPDATED TO 2014 FBC

date: 09-16-13
scale: 3/8" = 1"
dr. by: TARIQ
chk. by:

drawing no.
W13-44

MAX. DESIGN LOAD –PSF DUE TO ANCHOR CAPACITY EXT.(+) & INT.(–)		
NOMINAL DIMS.		1/2" DIA. KWIK BOLT
WIDTH (W)	FRAME HEIGHT	
36"	108"	100.0
40"		100.0
42"		100.0
48"		95.1
50"		90.6
54"		82.6
60"		72.6
36"	114"	100.0
40"		100.0
42"		100.0
48"		89.2
50"		84.9
54"		77.3
60"		67.8
36"	120"	100.0
40"		100.0
42"		98.3
48"		83.8
50"		79.8
54"		72.6
60"		63.6
36"	126"	100.0
40"		98.3
42"		92.8
48"		79.0
50"		75.2
54"		68.3
60"		59.7
36"	132"	100.0
40"		93.1
42"		87.8
48"		74.6
50"		70.9
54"		64.4
60"		56.2
36"	138"	100.0
40"		88.3
42"		83.2
48"		70.6
50"		67.1
54"		60.8
60"		53.0
36"	144"	95.1
40"		83.8
42"		79.0
48"		67.0
50"		63.6
54"		57.6
60"		50.1
36"	150"	90.6
40"		79.8
42"		75.2
48"		63.6
50"		60.3
54"		54.6

NOTE:
FOR SLABS LESS THAN 8 INCHES IN THICKNESS ANCHORS TO BE DESIGNED ON JOB TO JOB BASIS. THE DESIGN TO BE REVIEWED BY AUTHORITY HAVING JURISDICTION.

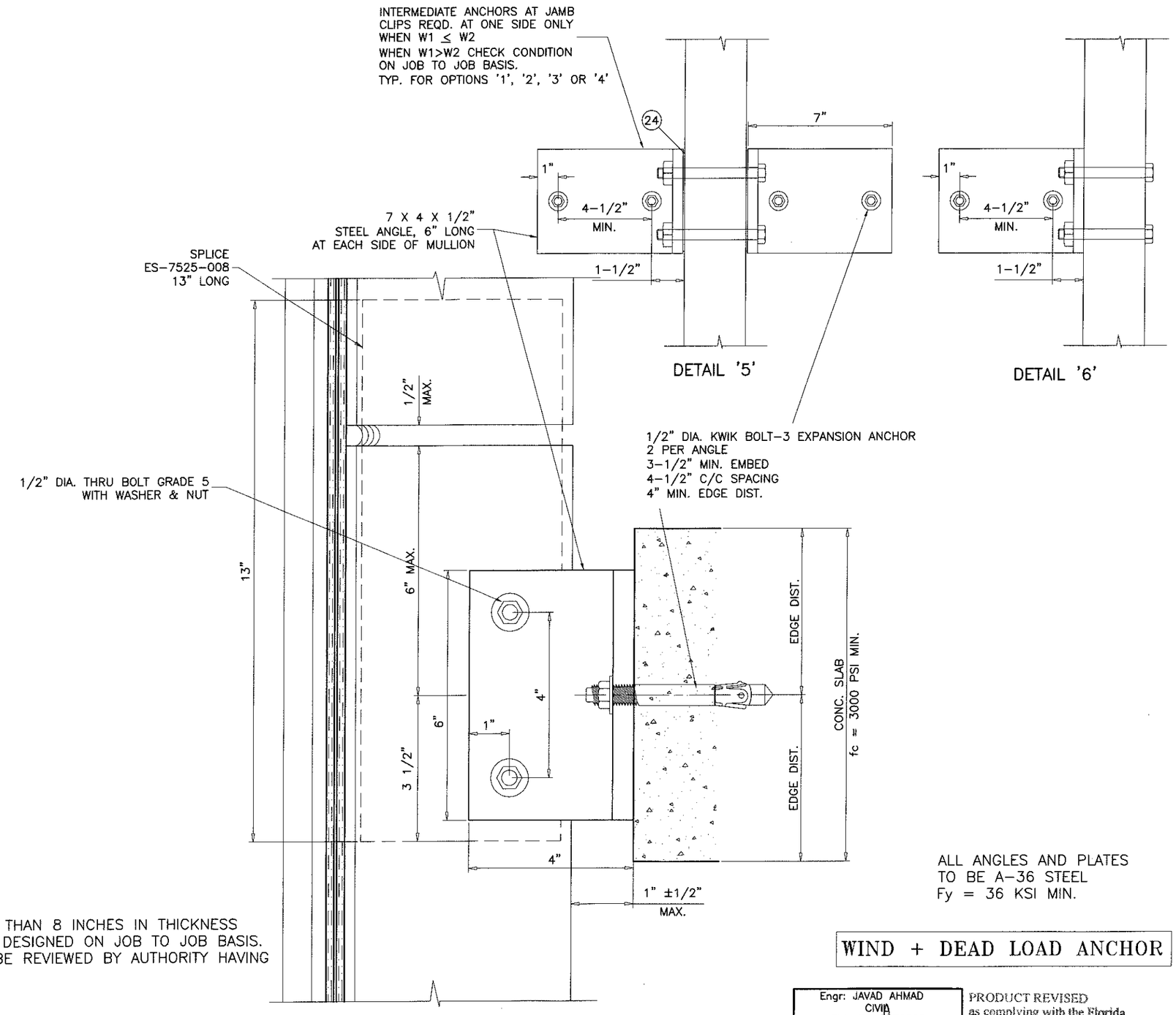

ALL ANGLES AND PLATES TO BE A–36 STEEL
Fy = 36 KSI MIN.

WIND + DEAD LOAD ANCHOR

INTERMEDIATE ANCHORS
DETAIL '5' AT CENTER MULLION
DETAIL '6' AT JAMB MULLION

ANCHORS INTO CONCRETE

Engr: JAVAD AHMAD
CIVIL
FLA. PE # 70592
C.A.N. 3538
JUL 25 2016

PRODUCT REVISED
as complying with the Florida Building Code
Acceptance No 16-0808.10
Expiration Date Feb.14.2018
By Manuel Perez
Miami-Dade Product Control

AL-FAROOQ CORPORATION
ENGINEERS & PRODUCT DEVELOPMENT
9360 SUNSET DRIVE, SUITE 220
MIAMI, FLORIDA 33173
TEL. (305) 264-8100 FAX. (305) 262-6978

COMP–ANL\W13–44MG

SERIES MG–7000 ALUM CURTAIN WALL SYSTEM (L.M.I.)

MR. GLASS DOORS & WINDOWS INC.
8120 N.W. 84 STREET
MEDLEY, FL. 33166
TEL. (305) 470–8284 FAX. (305) 470–8285

revisions:

no	date	by	description
A	07.21.16		UPDATED TO 2014 FBC

date: 09–16–13
scale: 3/8" = 1"
dr. by: TARIQ
chk. by:

drawing no.
W13–44

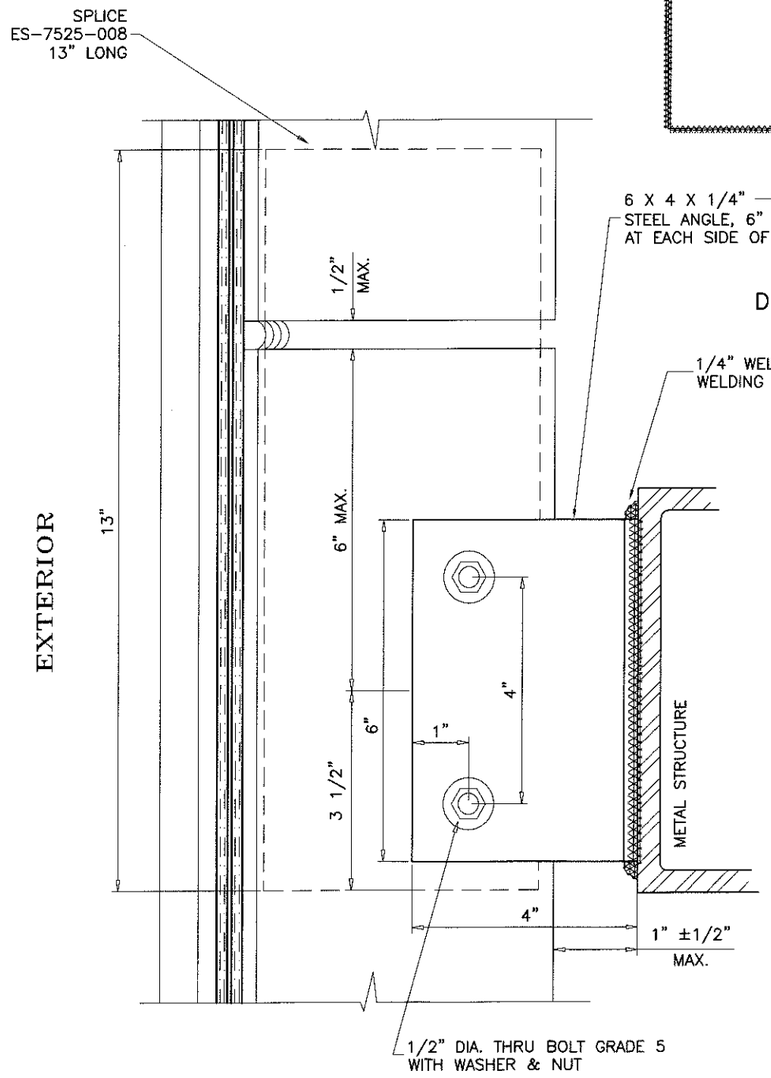

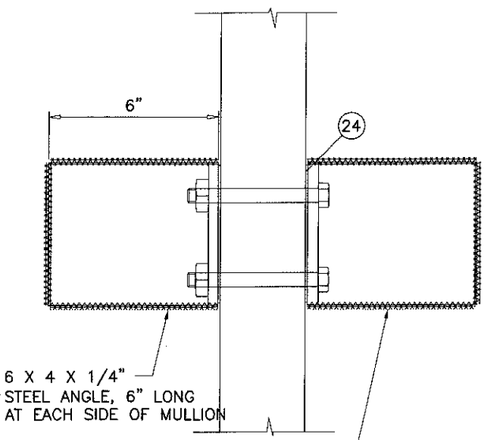

DETAIL '5' (ALT.)

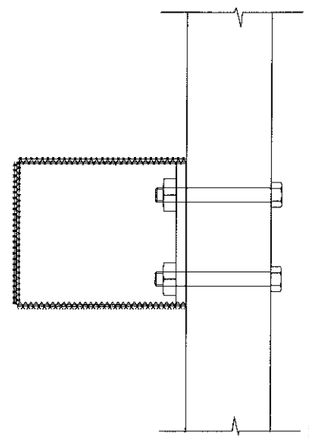

DETAIL '6' (ALT.)

MAX. DESIGN LOAD = 100 PSF

ALL ANGLES AND PLATES
TO BE A-36 STEEL
Fy = 36 KSI MIN.

WIND + DEAD LOAD ANCHOR

INTERMEDIATE ANCHORS
DETAIL '5' (ALT.) AT CENTER MULLION
DETAIL '6' (ALT.) AT JAMB MULLION

ANCHORS INTO METAL STRUCTURES
COMMERCIAL STEEL – 1/4" MIN. THICKNESS

Engr: JAVAD AHMAD
CIVIL
FLA. PE # 70592
C.A.N. 3838
NOV 25 2016

PRODUCT REVISED
as complying with the Florida
Building Code
Acceptance No 16-0802.10
Expiration Date Feb. 14, 2018
By
Miami-Dade Product Control

AL-FAROOQ CORPORATION
ENGINEERS & PRODUCT DEVELOPMENT
9360 SUNSET DRIVE, SUITE 220
MIAMI, FLORIDA 33173
TEL. (305) 264-8100 FAX. (305) 262-6978

COMP-ANL\W13-44MG

SERIES MG-7000 ALUM CURTAIN WALL SYSTEM (L.M.I.)

MR. GLASS DOORS & WINDOWS INC.
8120 N.W. 84 STREET
MEDLEY, FL. 33166
TEL. (305) 470-8284 FAX. (305) 470-8285

revisions:			
no	date	by	description
A	07.21.16		UPDATED TO 2014 FBC

date: 09-16-13
scale: 3/8" = 1"
dr. by: TARIQ
chk. by:

drawing no.
W13-44

sheet 22 of 30

MAX. DESIGN LOAD –PSF DUE TO ANCHOR CAPACITY EXT.(+) & INT.(–)		
NOMINAL DIMS.		1/2" DIA. KWIK BOLT
WIDTH (W)	FRAME HEIGHT	
36"	108"	100.0
40"		100.0
42"		100.0
48"		100.0
50"		100.0
54"		100.0
60"		100.0
36"	114"	100.0
40"		100.0
42"		100.0
48"		100.0
50"		100.0
54"		100.0
60"		95.6
36"	120"	100.0
40"		100.0
42"		100.0
48"		100.0
50"		100.0
54"		100.0
60"		89.9
36"	126"	100.0
40"		100.0
42"		100.0
48"		100.0
50"		100.0
54"		96.2
60"		84.8
36"	132"	100.0
40"		100.0
42"		100.0
48"		100.0
50"		99.8
54"		91.0
60"		80.1
36"	138"	100.0
40"		100.0
42"		100.0
48"		99.3
50"		94.6
54"		86.3
60"		75.8
36"	144"	100.0
40"		100.0
42"		100.0
48"		94.4
50"		89.9
54"		81.9
60"		71.9
36"	150"	100.0
40"		100.0
42"		100.0
48"		89.9
50"		85.6
54"		77.9

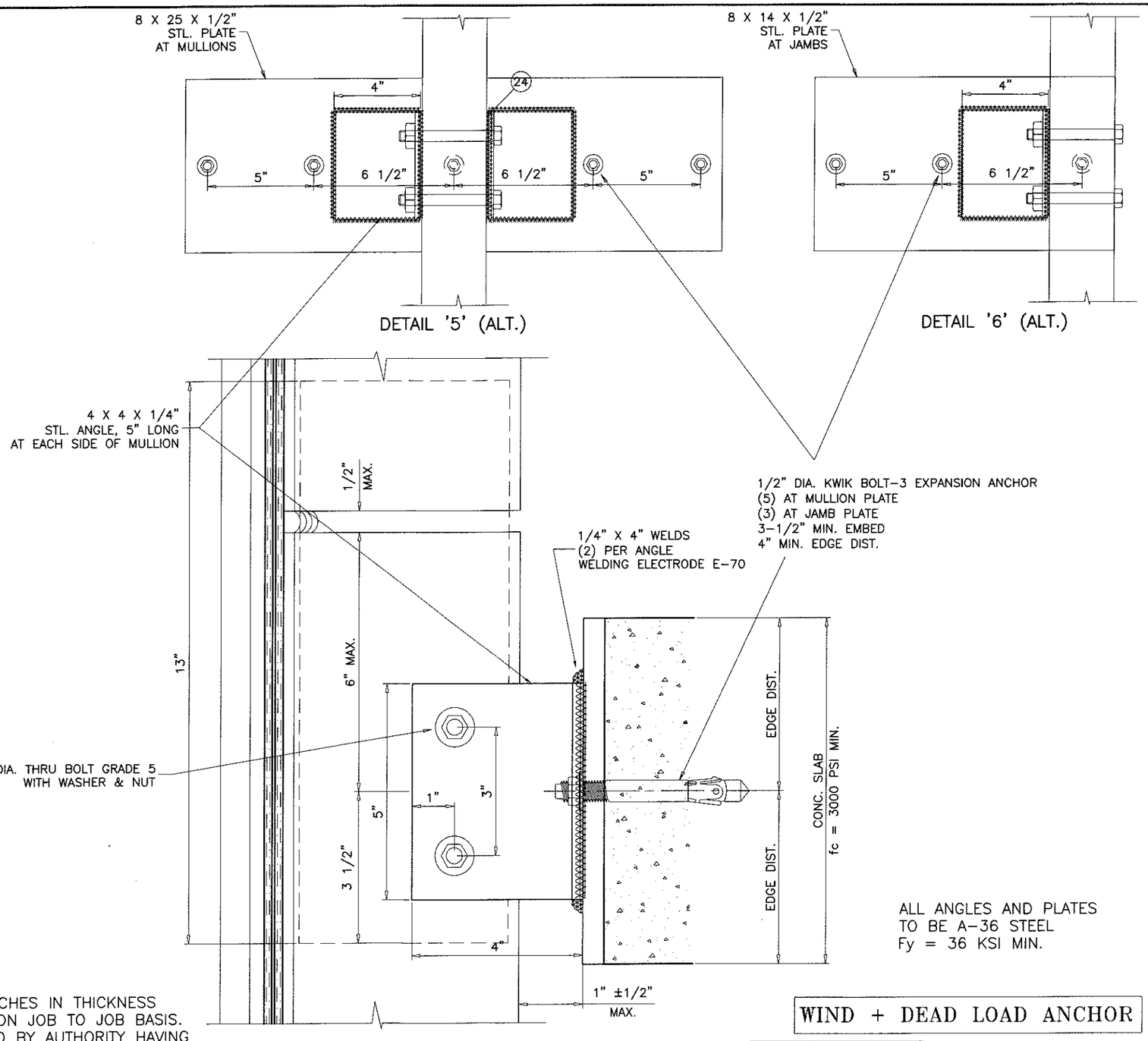

ALL ANGLES AND PLATES
TO BE A-36 STEEL
Fy = 36 KSI MIN.

NOTE:
FOR SLABS LESS THAN 8 INCHES IN THICKNESS ANCHORS TO BE DESIGNED ON JOB TO JOB BASIS. THE DESIGN TO BE REVIEWED BY AUTHORITY HAVING JURISDICTION.

WIND + DEAD LOAD ANCHOR

INTERMEDIATE ANCHORS
DETAIL '5' AT CENTER MULLION
DETAIL '6' AT JAMB MULLION

ANCHORS INTO CONCRETE

Engr: JAVAD AHMAD
CIVIL
FLA. PE # 70592
C.A.N. 3538
JUL 25 2016

PRODUCT REVISED
as complying with the Florida
Building Code
Acceptance No 16-0503.10
Expiration Date Feb. 14, 2018
By Manuel Perez
Miami-Dade Product Control

AL-FAROOQ CORPORATION
ENGINEERS & PRODUCT DEVELOPMENT
9360 SUNSET DRIVE, SUITE 220
MIAMI, FLORIDA 33173
TEL. (305) 264-8100 FAX. (305) 262-6978

COMP-ANL\W13-44MG

SERIES MG-7000 ALUM CURTAIN WALL SYSTEM (L.M.I.)

MR. GLASS DOORS & WINDOWS INC.
8120 N.W. 84 STREET
MEDLEY, FL. 33166
TEL. (305) 470-8284 FAX. (305) 470-8285

revisions:			
no	date	by	description
A	07.21.16		UPDATED TO 2014 FBC

date: 09-16-13
scale: 3/8" = 1"
dr. by: TARIQ
chk. by:

drawing no.
W13-44

MAX. DESIGN LOAD -PSF DUE TO ANCHOR CAPACITY EXT.(+) & INT.(-)		
NOMINAL DIMS.		1/2" DIA.
WIDTH (W)	FRAME HEIGHT	KWIK BOLT
36"	108"	100.0
40"		100.0
42"		100.0
48"		89.6
50"		86.0
54"		79.6
60"		71.7
36"	114"	100.0
40"		100.0
42"		97.0
48"		84.9
50"		81.5
54"		75.4
60"		67.9
36"	120"	100.0
40"		96.7
42"		92.1
48"		80.6
50"		77.4
54"		71.7
60"		64.5
36"	126"	100.0
40"		92.1
42"		87.7
48"		76.7
50"		73.7
54"		68.2
60"		61.4
36"	132"	97.7
40"		87.9
42"		83.8
48"		73.3
50"		70.4
54"		65.1
60"		58.6
36"	138"	93.5
40"		84.1
42"		80.1
48"		70.1
50"		67.3
54"		62.3
60"		56.1
36"	144"	89.6
40"		80.6
42"		76.8
48"		67.2
50"		64.5
54"		59.7
60"		53.7
36"	150"	86.0
40"		77.4
42"		73.7
48"		64.5
50"		61.9
54"		57.3

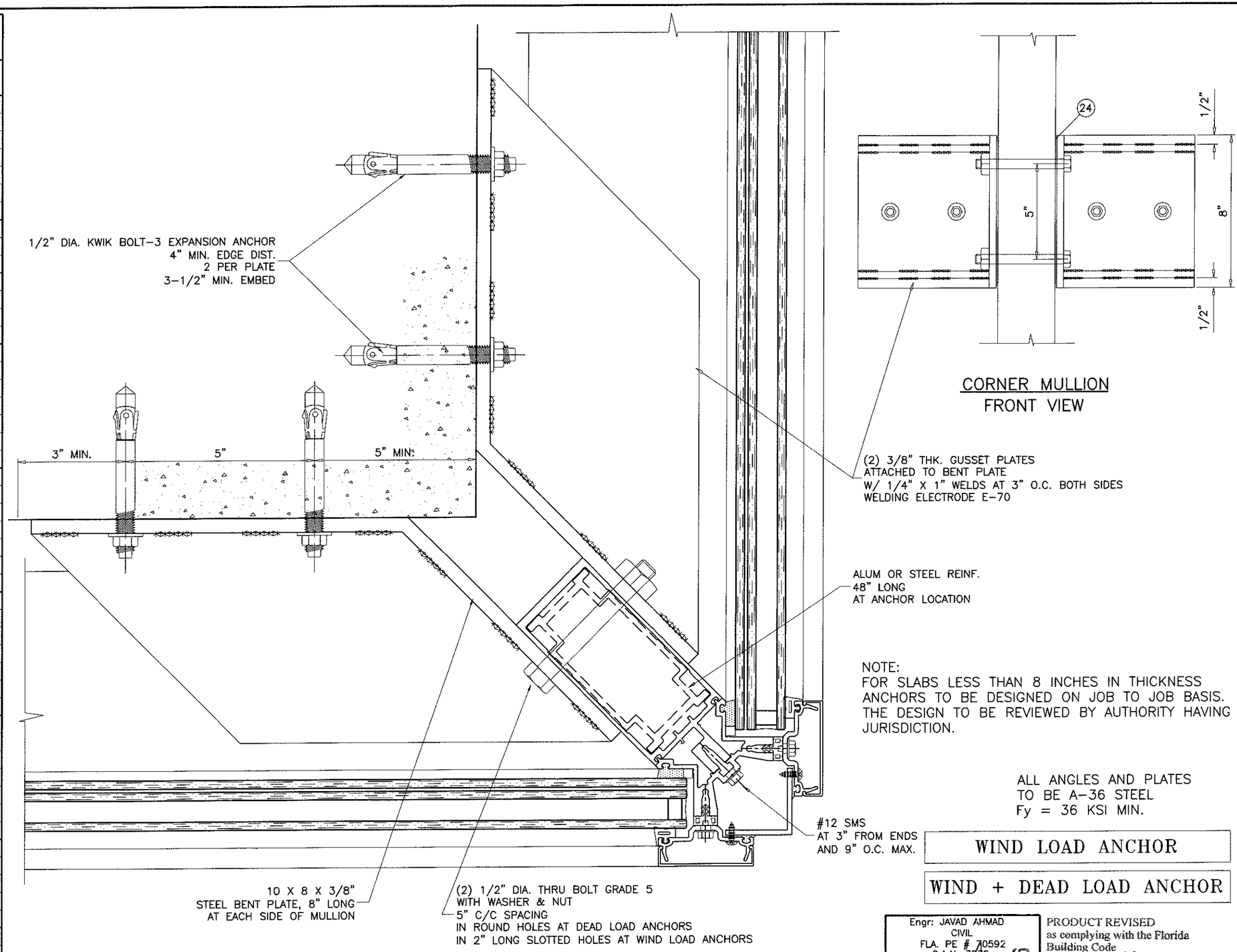

CORNER MULLION ANCHORS
DEATIL '8'

ANCHORS INTO CONCRETE

CORNER MULLION
FRONT VIEW

(2) 3/8" THK. GUSSET PLATES
ATTACHED TO BENT PLATE
W/ 1/4" X 1" WELDS AT 3" O.C. BOTH SIDES
WELDING ELECTRODE E-70

NOTE:
FOR SLABS LESS THAN 8 INCHES IN THICKNESS ANCHORS TO BE DESIGNED ON JOB TO JOB BASIS. THE DESIGN TO BE REVIEWED BY AUTHORITY HAVING JURISDICTION.

ALL ANGLES AND PLATES
TO BE A-36 STEEL
Fy = 36 KSI MIN.

WIND LOAD ANCHOR

WIND + DEAD LOAD ANCHOR

Engr: JAVAD AHMAD
CIVIL
FLA. PE # 70592
C.A.N. 3938

JUL 25 2016

PRODUCT REVISED
as complying with the Florida
Building Code
Acceptance No 16-0803.10
Expiration Date Feb. 14, 2018
By
Miami Dade Product Control

AL-FAROOQ CORPORATION
ENGINEERS & PRODUCT DEVELOPMENT
9360 SUNSET DRIVE, SUITE 220
MIAMI, FLORIDA 33173
TEL. (305) 264-8100 FAX. (305) 262-6978

COMP-ANL\W13-44MG

SERIES MG-7000 ALUM CURTAIN WALL SYSTEM (L.M.I.)

MR. GLASS DOORS & WINDOWS INC.
8120 N.W. 84 STREET
MEDLEY, FL. 33166
TEL. (305) 470-8284 FAX. (305) 470-8285

revisions:			
no	date	by	description
A	07.21.16		UPDATED TO 2014 FBC

date: 09-16-13
scale: 3/8" = 1"
dr. by: TARIQ
chk. by:

drawing no.
W13-44

MAX. DESIGN LOAD = 100 PSF

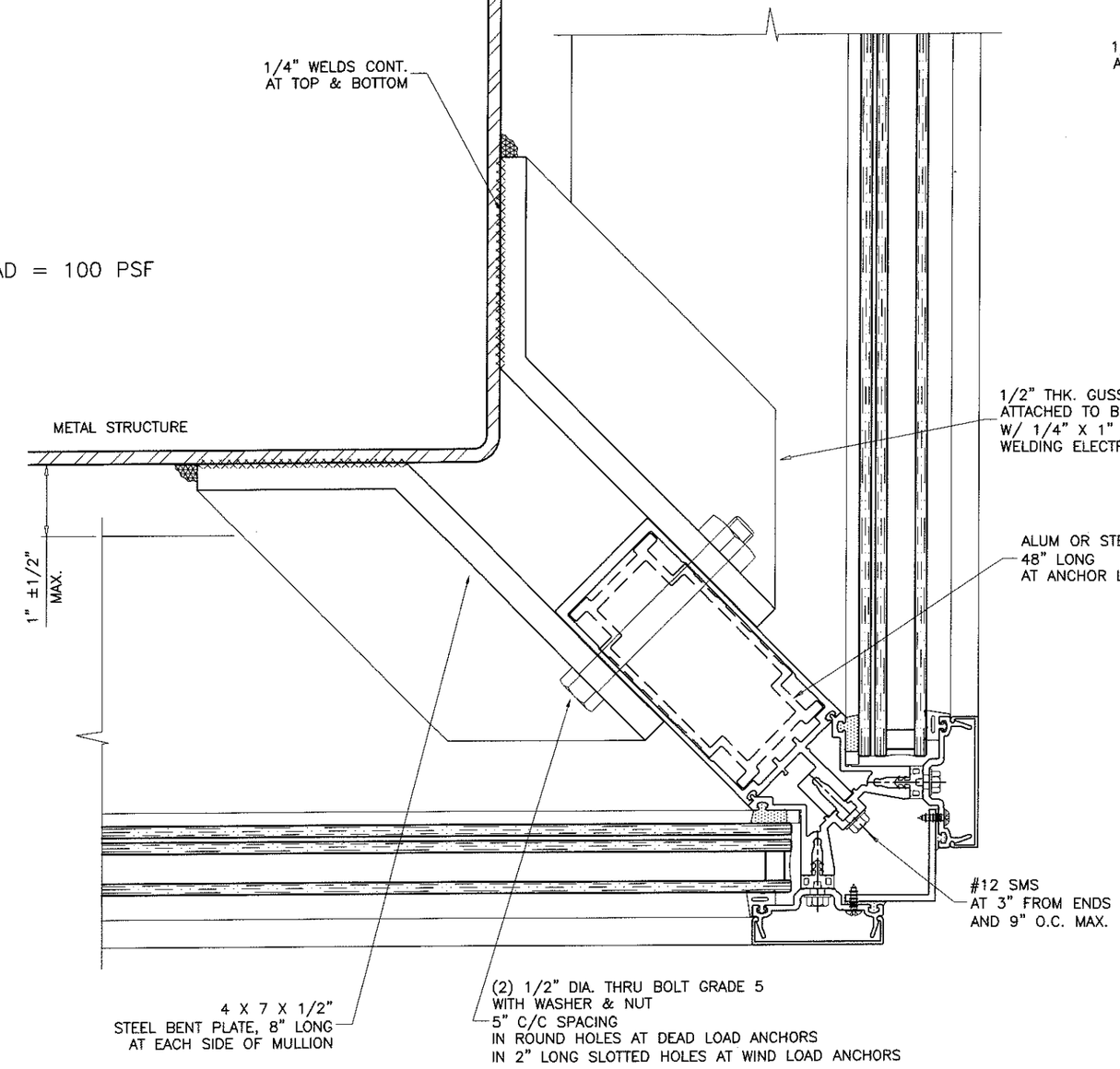

CORNER MULLION ANCHORS
DETAIL '8' (ALT.)

ANCHORS INTO METAL STRUCTURES
1/4" MIN. THICKNESS STEEL

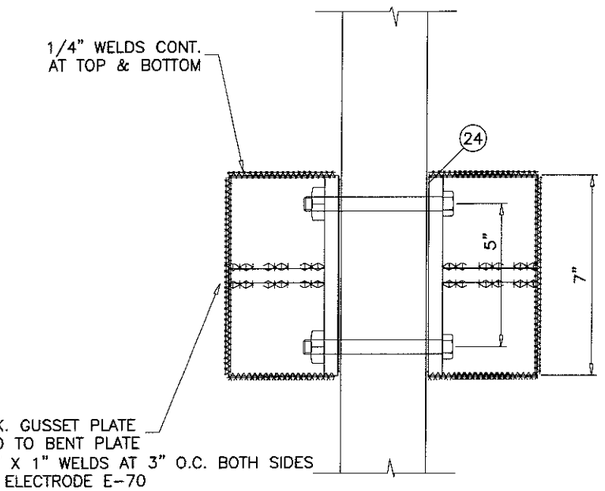

CORNER MULLION
FRONT VIEW

ALL ANGLES AND PLATES
TO BE A-36 STEEL
Fy = 36 KSI MIN.

WIND LOAD ANCHOR

WIND + DEAD LOAD ANCHOR

Engr: JAVAD AHMAD
CIVIL
FLA. PE # 70592
C.A.N. 3538

JUL 25 2016

PRODUCT REVISED
as complying with the Florida
Building Code
Acceptance No 16-0802.10
Expiration Date Feb. 14, 2018
By Manuel Perez
Miami-Dade Product Control

AL-FAROOQ CORPORATION
ENGINEERS & PRODUCT DEVELOPMENT
9360 SUNSET DRIVE, SUITE 220
MIAMI, FLORIDA 33173
TEL. (305) 264-8100 FAX. (305) 262-6978

COMP-ANL\W13-44MG

SERIES MG-7000 ALUM CURTAIN WALL SYSTEM (L.M.I.)

MR. GLASS DOORS & WINDOWS INC.
8120 N.W. 84 STREET
MEDLEY, FL. 33166
TEL. (305) 470-8284 FAX. (305) 470-8285

revisions:			
no	date	by	description
A	07.21.16		UPDATED TO 2014 FBC

date: 09-16-13
scale: 3/8" = 1"
dr. by: TARIQ
chk. by:

drawing no.
W13-44

WIND LOAD ANCHOR		
MAX. DESIGN LOAD -PSF DUE TO ANCHOR CAPACITY EXT.(+) & INT.(-)		
NOMINAL DIMS.		1/2" DIA. KWIK BOLT
WIDTH (W)	FRAME HEIGHT	
36"	108"	74.0
40"		66.6
42"		63.4
48"		55.5
50"		53.3
54"		49.3
60"		44.4
36"	114"	70.1
40"		63.1
42"		60.1
48"		52.6
50"		50.5
54"		46.7
60"		42.1
36"	120"	66.6
40"		59.9
42"		57.1
48"		49.9
50"		47.9
54"		44.4
60"		39.9
36"	126"	63.4
40"		57.1
42"		54.4
48"		47.6
50"		45.7
54"		42.3
60"		38.0
36"	132"	60.5
40"		54.5
42"		51.9
48"		45.4
50"		43.6
54"		40.4
60"		36.3
36"	138"	57.9
40"		52.1
42"		49.6
48"		43.4
50"		41.7
54"		38.6
60"		34.7
36"	144"	55.5
40"		49.9
42"		47.6
48"		41.6
50"		39.9
54"		37.0
60"		33.3
36"	150"	53.3
40"		47.9
42"		45.7
48"		39.9
50"		38.4
54"		35.5

WIND + DEAD LOAD ANCHOR		
MAX. DESIGN LOAD -PSF DUE TO ANCHOR CAPACITY EXT.(+) & INT.(-)		
NOMINAL DIMS.		1/2" DIA. KWIK BOLT
WIDTH (W)	FRAME HEIGHT	
36"	108"	58.6
40"		51.2
42"		48.0
48"		40.1
50"		37.9
54"		34.0
60"		29.0
36"	114"	54.7
40"		47.7
42"		44.7
48"		37.2
50"		35.1
54"		31.4
60"		26.7
36"	120"	51.2
40"		44.6
42"		41.7
48"		34.6
50"		32.6
54"		29.0
60"		24.6
36"	126"	48.0
40"		41.7
42"		39.0
48"		32.2
50"		30.3
54"		26.9
60"		22.7
36"	132"	45.2
40"		39.1
42"		36.5
48"		30.0
50"		28.2
54"		25.0
60"		21.0
36"	138"	42.5
40"		36.7
42"		34.3
48"		28.1
50"		26.3
54"		23.2
60"		19.4
36"	144"	40.1
40"		34.6
42"		32.2
48"		26.2
50"		24.6
54"		21.6
60"		17.9
36"	150"	37.9
40"		32.6
42"		30.3
48"		24.6
50"		23.0
54"		20.1

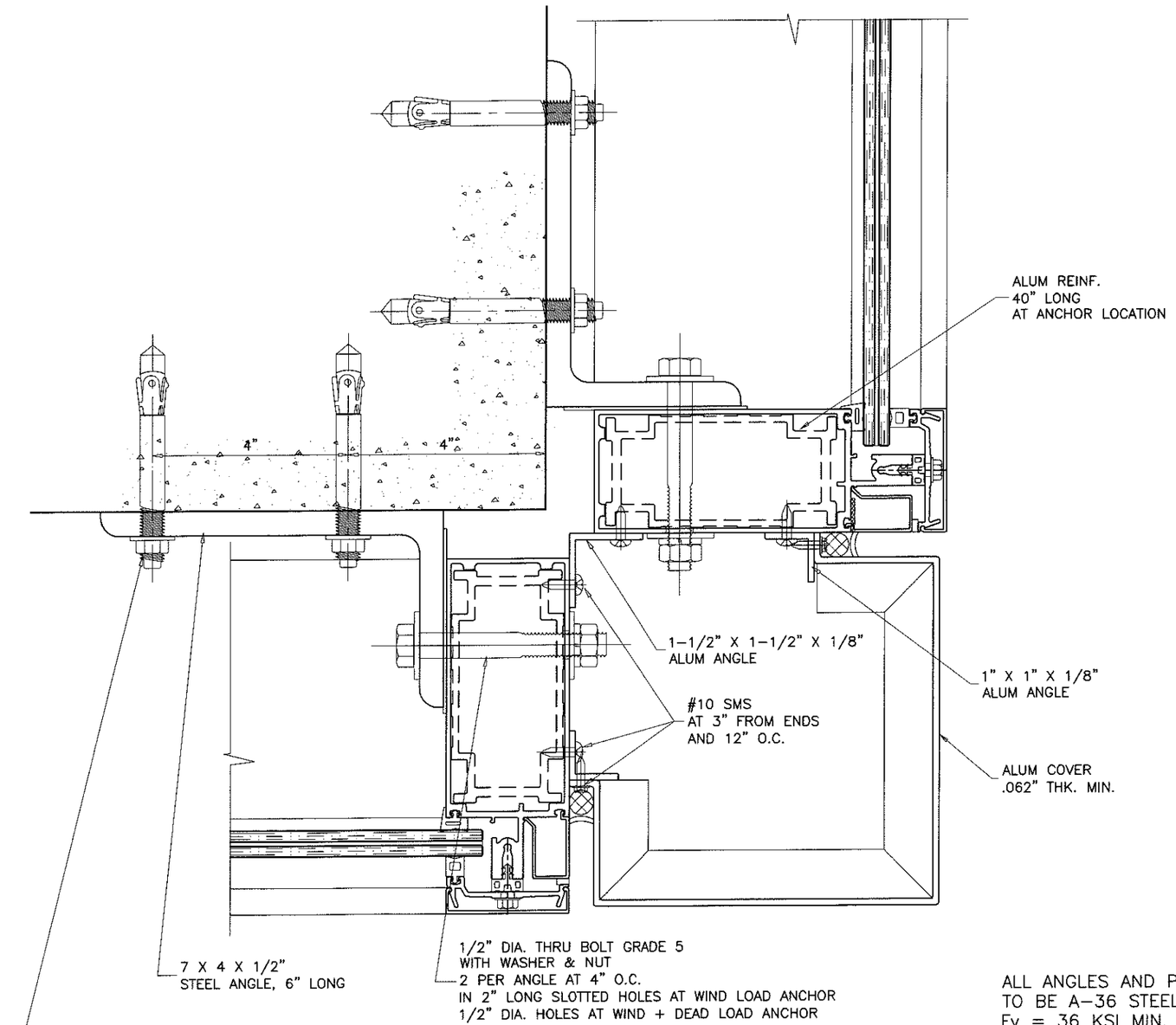

CORNER MULLION ANCHORS

DEATIL '9'

ANCHORS INTO CONCRETE

ALL ANGLES AND PLATES TO BE A-36 STEEL
Fy = 36 KSI MIN.

WIND LOAD ANCHOR

WIND + DEAD LOAD ANCHOR

NOTE:
FOR SLABS LESS THAN 8 INCHES IN THICKNESS ANCHORS TO BE DESIGNED ON JOB TO JOB BASIS. THE DESIGN TO BE REVIEWED BY AUTHORITY HAVING JURISDICTION.

Engr: JAVAD AHMAD
CIVIL
FLA. PE # 70592
C.A.N. 3538

JUL 25 2016

PRODUCT REVISED
as complying with the Florida
Building Code
Acceptance No 16-0809.10
Expiration Date Feb.14,2018
By Manuel Perez
Miami Dade Product Control

AL-FAROOQ CORPORATION
ENGINEERS & PRODUCT DEVELOPMENT
9360 SUNSET DRIVE, SUITE 220
MIAMI, FLORIDA 33173
TEL. (305) 264-8100 FAX. (305) 262-6978

COMP-ANL\W13-44MG

SERIES MG-7000 ALUM CURTAIN WALL SYSTEM (L.M.I.)

MR. GLASS DOORS & WINDOWS INC.
8120 N.W. 84 STREET
MEDLEY, FL. 33166
TEL. (305) 470-8284 FAX. (305) 470-8285

revisions:			
no	date	by	description
A	07.21.16		UPDATED TO 2014 FBC

date: 09-16-13
scale: 3/8" = 1"
dr. by: TARIQ
chk. by:

drawing no.
W13-44

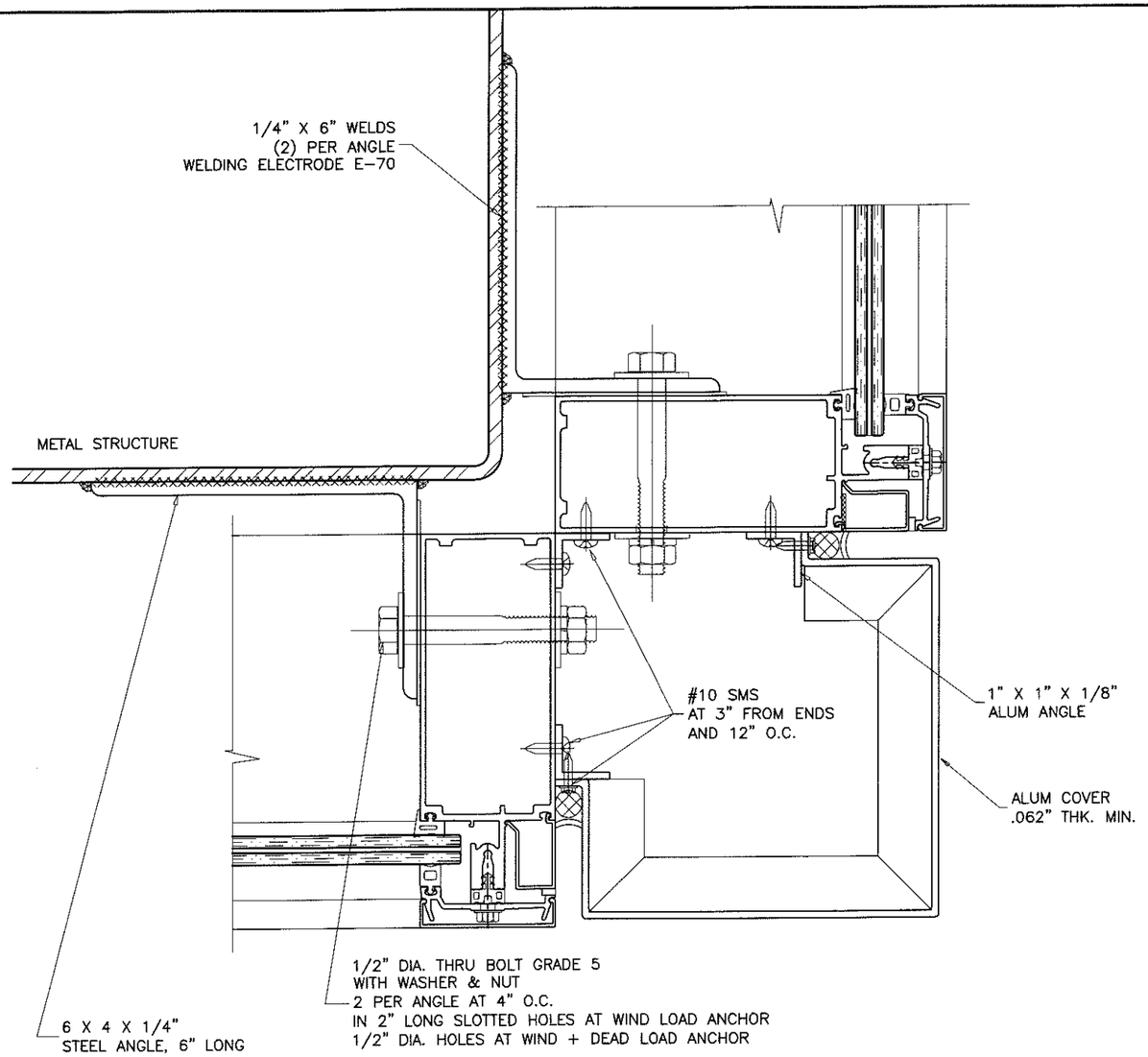

MAX. DESIGN LOAD = 100 PSF

CORNER MULLION ANCHORS
DETAIL '9' (ALT.)

ANCHORS INTO METAL STRUCTURES
1/4" MIN. THICKNESS STEEL

ALL ANGLES AND PLATES
TO BE A-36 STEEL
Fy = 36 KSI MIN.

WIND LOAD ANCHOR

WIND + DEAD LOAD ANCHOR

Engr: JAVAD AHMAD
CIVIL
FLA. PE # 70592
C.A.N. 3558

JUL 25 2016

PRODUCT REVISED
as complying with the Florida
Building Code
Acceptance No 16-0608.10
Expiration Date Feb. 14, 2018
By
Miami Dade Product Control

AL-FAROOQ CORPORATION
ENGINEERS & PRODUCT DEVELOPMENT
9360 SUNSET DRIVE, SUITE 220
MIAMI, FLORIDA 33173
TEL. (305) 264-8100 FAX. (305) 262-6978

COMP-ANL\W13-44MG

SERIES MG-7000 ALUM CURTAIN WALL SYSTEM (L.M.I.)

MR. GLASS DOORS & WINDOWS INC.
8120 N.W. 84 STREET
MEDLEY, FL. 33166
TEL. (305) 470-8284 FAX. (305) 470-8285

revisions:

no	date	by	description
A	07.21.16		UPDATED TO 2014 FBC

date: 09-16-13
scale: 3/8" = 1"
dr. by: TARIQ
chk. by:

drawing no.
W13-44

sheet 27 of 30

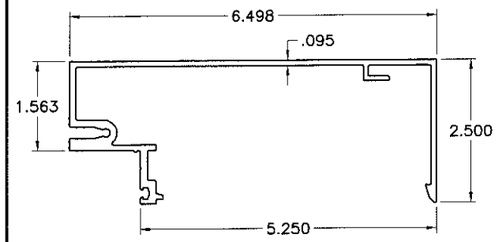

FRAME HEAD/SILL
ES7525-001

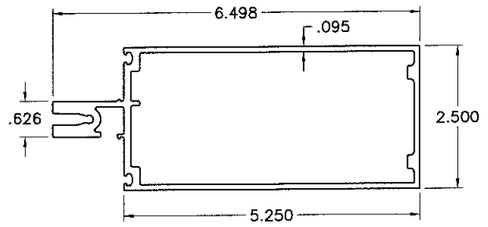

HORIZONTAL (STD.)
ES7525-003

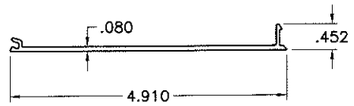

SNAP INTERIOR COVER
ES7525-005

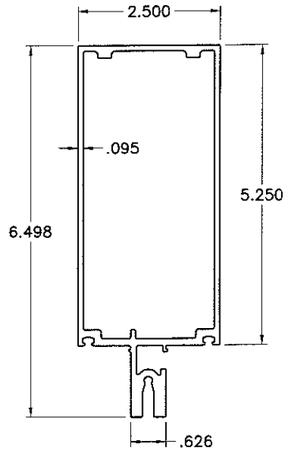

FRAME JAMB
ES7525-003

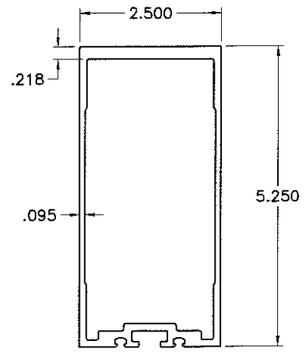

MULLION BUTT GLAZED
ES7525-007

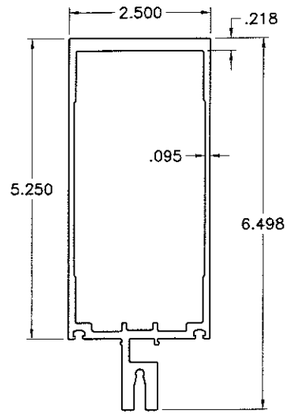

MULLION HEAVY
ES7525-004

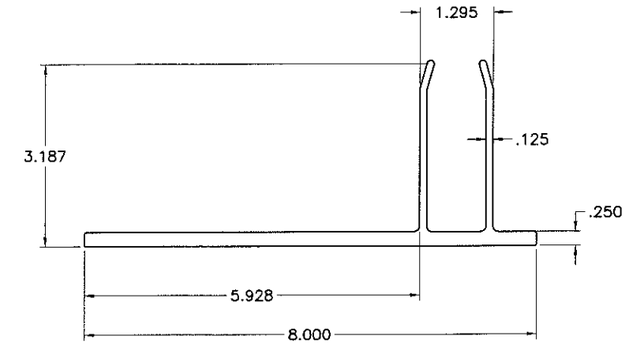

'F' ANCHOR CLIP
ES-7525-51

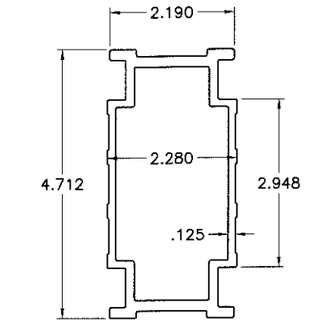

SPLICE SLEEVE/MULLION REINF.
ES7525-008

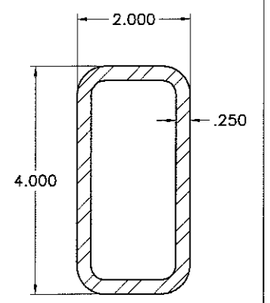

MULLION REINF.
STEEL Fy=46 KSI

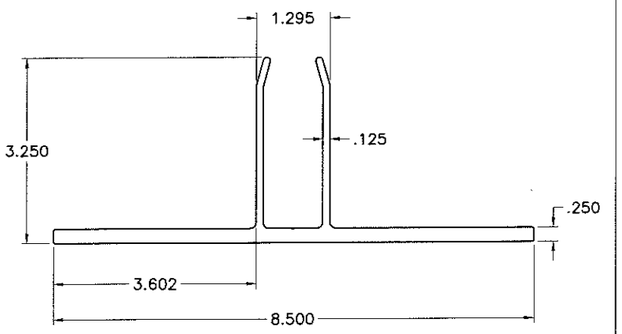

'T' ANCHOR CLIP
ES-7525-50

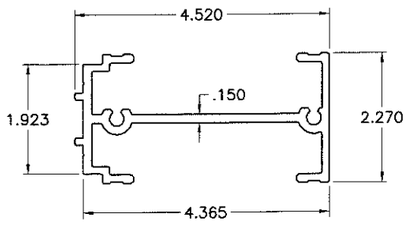

SHEAR BLOCK
ES7525-006

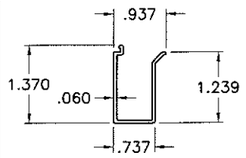

END COVER
ES6025-013

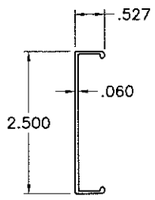

STANDARD COVER
ES6025-009

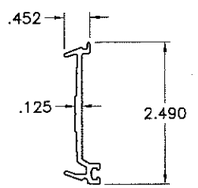

PRESS PLATE LAM. GLASS
HEAD/SILL/JAMB
ES6025-025

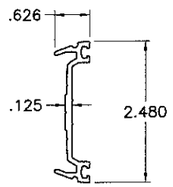

PRESS PLATE LAM. GLASS
HORIZONTAL/MULLION
ES6025-024

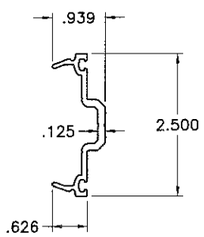

PRESS PLATE INSUL. LAM. GLASS
HEAD/SILL/JAMB/MULLION
ES6025-008

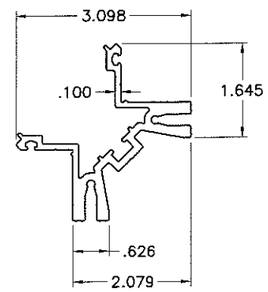

CORNER MULL GLAZING ADAPTER
ES6025-015

Engr: JAVAD AHMAD
CIVIL
FLA. PE # 70592
C.A.N. 3538

JUL 25 2016

PRODUCT REVISED
as complying with the Florida
Building Code
Acceptance No 16-0809.10
Expiration Date Feb. 14, 2018
By Manuel Perez
Miami Dade Product Control

AL-FAROOQ CORPORATION
ENGINEERS & PRODUCT DEVELOPMENT
9360 SUNSET DRIVE, SUITE 220
MIAMI, FLORIDA 33173
TEL. (305) 264-8100 FAX. (305) 262-6978

COMP-ANL\W13-44MG

SERIES MG-7000 ALUM CURTAIN WALL SYSTEM (L.M.I.)

MR. GLASS DOORS & WINDOWS INC.
8120 N.W. 84 STREET
MEDLEY, FL. 33166
TEL. (305) 470-8284 FAX. (305) 470-8285

revisions:

no	date	by	description
A	07.21.16		UPDATED TO 2014 FBC

date: 09-16-13
scale: 3/8" = 1"
dr. by: TARIQ
chk. by:

drawing no.
W13-44

sheet 28 of 30

ITEM NO.	PART NO.	DESCRIPTION	MATERIAL	MANF./SUPPLIER/REMARKS
1	ES-7525-001	HEAD	6063-T5	
2	ES-7525-001	SILL	6063-T5	
3	ES-7525-003	JAMB	6063-T6	
4	ES-7525-003	MULLION STD.	6063-T6	
5	ES-7525-003	HORIZONTAL STD.	6063-T6	
6	ES-7525-002	OPEN HORIZONTAL	6063-T6	
7	ES-7525-004	VERTICAL MULLION HEAVY	6063-T6	
8	ES-7525-005	SNAP INTERIOR COVER (HEAD / SILL / HORIZONTAL)	6063-T5	
9	ES-7525-006	SHEAR BLOCK	6063-T5	1 1/4" LG.
10	ES-7525-007	ALT. VERTICAL MULLION BUTT GLAZED	6063-T6	
11	ES-7525-008	SPLICE SLEEVE	6063-T6	6" LG.
11A	ES-7525-008	SPLICE SLEEVE AS MID-ANCHOR REINF.	6063-T6	40" LG.
11B	ES-7525-008	SPLICE SLEEVE AS MULLION REINF	6063-T6	MULLION LG. -6"
11C	ES-7525-008	SPLICE SLEEVE AS ANCHOR SLEEVE	6063-T6	3" LG.
12	ES-6025-008	DEEP PRESSURE PLATE	6063-T5	1 5/16" GLASS
13	ES-6025-009	STANDARD COVER	6063-T5	
14	ES-6025-010	JAMB END ANCHOR	6063-T5	4 3/4" LG.
15	ES-6025-011*	MULLION END ANCHOR	6063-T5	* MODIFIED (4" LG.)
15A	ES-6025-011*	CORNER END ANCHOR	6063-T5	* MODIFIED (SEE DET.)
16	ES-6025-013	POCKET FILLER	6063-T5	
17	ES-6025-015	90° ADAPTER	6063-T6	
18	ES-6025-017	90° INTERIOR ADAPTER	6063-T5	
19	ES-6025-018	90° INTERIOR COVER	6063-T5	
20	AL-019	SHEAR BLOCK FOR 90° OUTSIDE CORNER	6063-T5	LEFT & RIGHT (1 1/2" x 1 1/2" x 1/8")
21	AL-023	EXTERIOR COVER - 90° OUTSIDE CORNER	6063-T5	LEFT & RIGHT (1 3/4" x 1 3/4" x 1/8")
22	ES-6025-G01	INTERIOR / EXTERIOR GASKET	EPDM	
23	ES-6025-G02	ISOLATOR	EPDM	
24	ES-6025-G04	SPACER AT JAMB	EPDM	1 5/16" GLASS
25	ES-6025-G05	INTERIOR SPACER FOR SILICONE BUTT GLAZE	SILICONE **	**OR SILICONE COMPATIBLE EPDM 70 DURO.
26	ES-6025-G07	POLYURETHANE TAPE (ADHESIVE 1 SIDE)	POLYURETHANE	1/4" x 1/4" REF: NORTON V-2100
27	ES-6025-B04	SETTING BLOCK, 4" LONG, ADHESIVE 1 SIDE	EPDM	DUROMETER 80±5 SHORE A
28	ES-6025-B07	JOINT PLUG EXTENSION	FOAM	
29	ES-6025-B08	JOINT PLUG FOR BUTT GLAZING	EPDM	
30	ES-6025-B09	END PLUG	FOAM	3/4" LONG. (CANT: 2/HEAD + 2/SILL)
31	ES-6025-B10	JOINT PLUG	FOAM	1 5/16" GLASS
32	ES-6025-C02	MULLION END CAP	ALUM. SHEET	1 5/16" GLASS
33	ES-6025-C05	90° OUTSIDE CORNER MULLION END CAP	ALUM. SHEET	1 5/16" GLASS
34	ES-6025-M01	STD. FLOOR ANCHOR WIND LOAD	PAINTED ST.	4" x 4" x 1/4" ANGLE, 5" LONG.
34A	ES-6025-M02	STD. FLOOR ANCHOR DEAD LOAD	PAINTED ST.	4" x 4" x 1/4" ANGLE, 5" LONG.
35	ES-6025-M16	90° CORNER FLOOR ANCHOR DEAD LOAD	PAINTED ST.	FORMED STEEL ANGLE, 5" LONG.
36	--	HEAVY REINFORCEMENT	STEEL	TS 4" X 2" X 1/4"
37	ES-6025-M03	ANCHOR METAL SEPARATOR	NYLON SHEET	1/FLOOR ANCHOR
38	F4	#8 x 1/2" PHSMS	ST.	FOR ATTACH MULLION END CAP
39	F6	#12 x 3/4" FHSMS	ST. ST.	FOR ATTACH HORIZONTAL TO SHEAR BLOCK
40	F7	1/4" - 20 x 1 1/2" HH TYPE "F"	ST. ST.	FOR ATTACH SHEAR BLOCK TO VERTICAL
41	F8	1/4" - 20 x 1/2" HH TYPE "F"	ST. ST.	FOR ATTACH SHEAR BLOCK TO VERT. COR.
42	F9	HBOLT 1/2" - 20 x 4" HWHMS	ST. ST.	FOR ATTACH FLOOR ANCHOR TO VERTICAL
43	F10	1/4" x 1" HWH TYPE AB PT.	ST. ST.	FOR ATTACH PRESSURE PLATE
44	F11	1/2" PLAIN FLAT WASHER	ST. ST.	FLOOR ANCHOR ASSEMBLY
45	F12	1/2" LOCK WASHER	ST. ST.	FLOOR ANCHOR ASSEMBLY
46	F13	1/2" - 20 HEX BOLT NUT HHMS	ST. ST.	FLOOR ANCHOR ASSEMBLY
47	F14	#10 x 3/8" HH TYPE F	ST. ST.	90° INTERIOR COVER
48	--	SILICONE DOW 795	SILICONE	FOR PERIMETER & WEATHER SEALS
49	--	SILICONE DOW 995	SILICONE	FOR STRUCTURAL JOINTS
50	ES-6025-G06	EXTERIOR GLAZING GASKET (LAM. GLASS)	EPDM	-
51	--	BUMPON SPACER	SILICONE	-
52	ES-7525-50	'T' ANCHOR CLIP	6005-T5	-
53	ES-7525-51	'F' ANCHOR CLIP	6005-T5	-

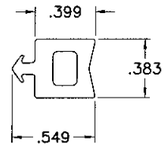

EXT. GLAZING GASKET
G6 (LAMINATED GLASS)

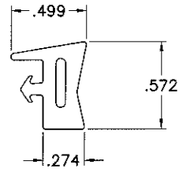

EXT. GLAZING GASKET
G1 (INSUL. LAM. GLASS)

DENSE RUBBER EXTRUSIONS BY 'TREMCO'
SCALE 1:1

HARDNESS = 68-71 SHORE A
TENSILE STRENGTH (BREAK)= 1810-1925 PSI
ELONGATION AT BREAK = 350-530%
TEAR STRENGTH = 143-209 LBF/IN

Engr: JAVAD AHMAD
CIVIL
FLA. PE # 70592
C.A.N. 3588

JUL 25 2016

PRODUCT REVISED
as complying with the Florida
Building Code
Acceptance No 16-0808.10
Expiration Date Feb. 14, 2018
By
Miami-Dade Product Control

AL-FAROOQ CORPORATION
ENGINEERS & PRODUCT DEVELOPMENT
9360 SUNSET DRIVE, SUITE 220
MIAMI, FLORIDA 33173
TEL. (305) 264-8100 FAX. (305) 262-6978

COMP-ANL\W13-44MG

SERIES MG-7000 ALUM CURTAIN WALL SYSTEM (L.M.I.)

MR. GLASS DOORS & WINDOWS INC.
8120 N.W. 84 STREET
MEDLEY, FL. 33166
TEL. (305) 470-8284 FAX. (305) 470-8285

revisions:

no	date	by	description
A	07.21.16		UPDATED TO 2014 FBC

date: 09-16-13
scale: 3/8" = 1"
dr. by: TARIQ
chk. by:

drawing no.
W13-44

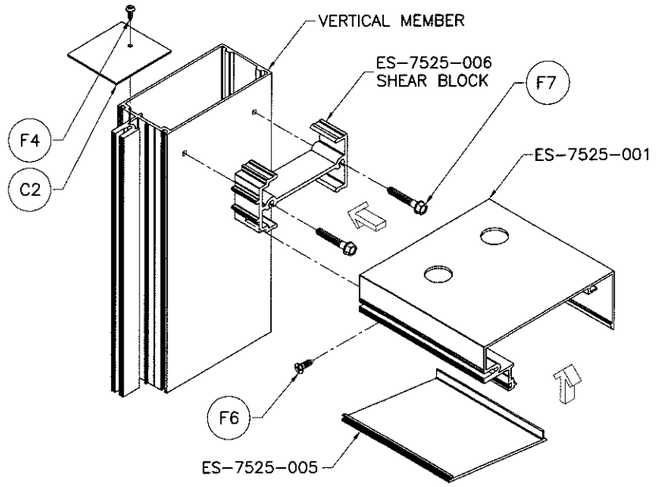

FRAME TOP CORNER

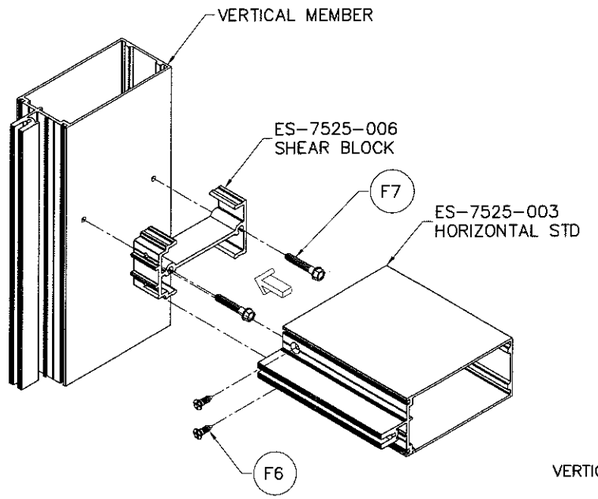

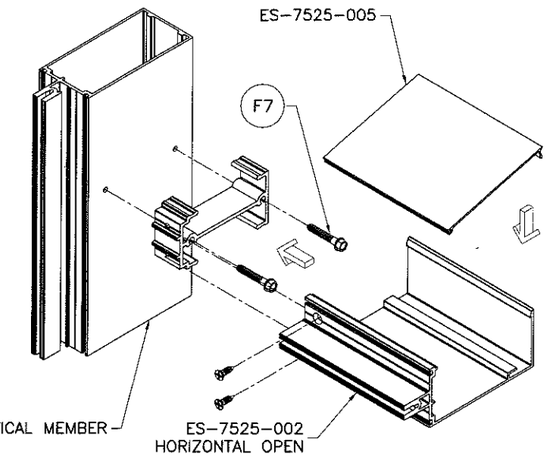

FRAME HORIZONTAL CORNERS

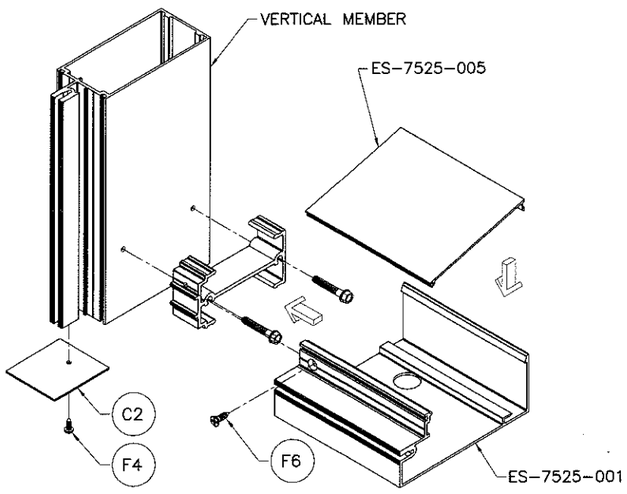

FRAME BOTTOM CORNER

Engr: JAVAD AHMAD
CIVIL
FLA. PE # 70592
C.A.N. 3538
JUL 25 2016

PRODUCT REVISED
as complying with the Florida
Building Code
Acceptance No 16-0808.10
Expiration Date Feb. 14, 2018
By Manuel Perez
Miami Dade Product Control

AL-FAROOQ CORPORATION
ENGINEERS & PRODUCT DEVELOPMENT
9360 SUNSET DRIVE, SUITE 220
MIAMI, FLORIDA 33173
TEL. (305) 264-8100 FAX. (305) 262-6978

COMP-ANL\W13-44MG

SERIES MG-7000 ALUM CURTAIN WALL SYSTEM (L.M.I.)

MR. GLASS DOORS & WINDOWS INC.
8120 N.W. 84 STREET
MEDLEY, FL. 33166
TEL. (305) 470-8284 FAX. (305) 470-8285

revisions:		
no	date	by description
A	07.21.16	UPDATED TO 2014 FBC

date: 09-16-13
scale: 3/8" = 1"
dr. by: TARIQ
chk. by:

drawing no.
W13-44

sheet 30 of 30