MIAMI-DADE COUNTY
PRODUCT CONTROL SECTION
11805 SW 26 Street, Room 208
Miami, Florida 33175-2474
T (786) 315-2590 F (786) 315-2599
www.miamidade.gov/economy

DEPARTMENT OF REGULATORY AND ECONOMIC RESOURCES (RER)
BOARD AND CODE ADMINISTRATION DIVISION

NOTICE OF ACCEPTANCE (NOA)

Elemex Inc.
530 Admiral Drive
London, Ontario, Canada, N5V 0B2

SCOPE:

This NOA is being issued under the applicable rules and regulations governing the use of construction materials. The documentation submitted has been reviewed and accepted by Miami-Dade County RER-Product Control Section to be used in Miami Dade County and other areas where allowed by the Authority Having Jurisdiction (AHJ).

This NOA shall not be valid after the expiration date stated below. The Miami-Dade County Product Control Section (In Miami Dade County) and/or the AHJ (in areas other than Miami Dade County) reserve the right to have this product or material tested for quality assurance purposes. If this product or material fails to perform in the accepted manner, the manufacturer will incur the expense of such testing and the AHJ may immediately revoke, modify, or suspend the use of such product or material within their jurisdiction. RER reserves the right to revoke this acceptance, if it is determined by Miami-Dade County Product Control Section that this product or material fails to meet the requirements of the applicable building code.

This product is approved as described herein, and has been designed to comply with the Florida Building Code, including the High Velocity Hurricane Zone.

DESCRIPTION: Ceramitex 6mm+ Porcelain Ceramic Wall Panel System

APPROVAL DOCUMENT: Drawing titled "Ceramitex 6mm+ Wall Panel", sheets 1 through 8 of 8, dated 04/06/2018, with last revision dated 06/25/2018, prepared by Wolters Engineering, Inc., signed and sealed by Scott Wolters, P.E., bearing the Miami-Dade County Product Control approval stamp with the Notice of Acceptance number and approval date by the Miami-Dade County Product Control Section.

MISSILE IMPACT RATING: Large and Small Missile Impact Resistant

LABELING: Each unit shall bear a permanent label with the manufacturer's name or logo, city, state, model/series, and following statement: "Miami-Dade County Product Control Approved", unless otherwise noted herein.

RENEWAL of this NOA shall be considered after a renewal application has been filed and there has been no change in the applicable building code negatively affecting the performance of this product.

TERMINATION of this NOA will occur after the expiration date or if there has been a revision or change in the materials, use, and/or manufacture of the product or process. Misuse of this NOA as an endorsement of any product, for sales, advertising or any other purposes shall automatically terminate this NOA. Failure to comply with any section of this NOA shall be cause for termination and removal of NOA.

ADVERTISEMENT: The NOA number preceded by the words Miami-Dade County, Florida, and followed by the expiration date may be displayed in advertising literature. If any portion of the NOA is displayed, then it shall be done in its entirety.

INSPECTION: A copy of this entire NOA shall be provided to the user by the manufacturer or its distributors and shall be available for inspection at the job site at the request of the Building Official.

This NOA consists of this page 1 and evidence page E-1, as well as approval document mentioned above.

The submitted documentation was reviewed by **Carlos M. Utrera, P.E.**

MIAMI-DADE COUNTY APPROVED

12/19/2018

NOTICE OF ACCEPTANCE: EVIDENCE SUBMITTED

A. DRAWINGS

1. Drawing titled "Ceramitex 6mm+ Wall Panel", sheets 1 through 8 of 8, dated 04/06/2018, with last revision dated 06/25/2018, prepared by Wolters Engineering, Inc., signed and sealed by Scott Wolters, P.E.

B. TESTS

1. Test reports on 1) Air Infiltration Test, per FBC, TAS 202-94
   2) Uniform Static Air Pressure Test, Loading per FBC TAS 202-94
   3) Water Resistance Test, per FBC, TAS 202-94
   4) Cyclic Wind Pressure Loading per FBC, TAS 203-94

   along with marked-up drawings of Ceramitex Panel System, prepared by Intertek, Test Report No. **102676238TOR-004**, dated 09/29/2016, signed and sealed by Frederick D, Curkeet, P.E.

C. CALCULATIONS

1. Anchoring verification calculation prepared by Wolters Engineering, Inc., dated 02/23/2018, signed and sealed by Scott Wolters, P.E.

D. QUALITY ASSURANCE

1. Miami-Dade Department of Regulatory and Economic Resources (RER)

E. MATERIAL CERTIFICATIONS

1. Test report on Self-Ignition Temperature per ASTM D1929-16 on the Neolith sintered to the ceramic panels, prepared by Intertek, Test Report No. **102917674MID-001Rev2**, dated 01/18/2017, and revised on 07/03/2017, signed and sealed by Joseph A. Reed, P.E.
2. Test reports on Surface Burning Characteristics per ASTM E84-16A on the Neolith sintered to the ceramic panels, prepared by Intertek, Test Report No. **102676238COQ-014Rev1**, dated 07/03/2017, signed and sealed by Joseph A. Reed, P.E.
3. Test report on Rate of Burning per ASTM D635-14 on the Neolith sintered to the ceramic panels, prepared by Intertek, Test Report No. **102917674MID-002Rev2**, dated 01/18/2017, and revised on 07/03/2017, signed and sealed by Joseph A. Reed, P.E.

F. STATEMENTS

1. Statement letter of code conformance to the 6th edition (2017) FBC issued by Wolters Engineering, Inc., dated 02/23/2018, signed and sealed by Scott Wolters, P.E.
2. Statement letter of no financial interest issued by Wolters Engineering, Inc., dated 02/23/2018, signed and sealed by Scott Wolters, P.E.
3. Distributor agreement dated 11/23/2016.

12/19/2018

Carlos M. Utrera, P.E.
Product Control Examiner
NOA No. 16-1004.05
Expiration Date: September 6, 2023
Approval Date: September 6, 2018

1. This product has been tested per TAS 202 & 203 protocols, and meets the requirements of the 6th Edition (2017) Florida Building Code for use inside and outside of the High Velocity Hurricane Zone (HVHZ).
2. This Product is not approved for impact resistance as a stand–alone product. In the HVHZ or Windborne Debris Regions, it may only be installed over impact resistant substrates meeting requirements of FBC Section 1626.
3. The details included are for installation over metal studs and plywood. For installations over concrete or CMU, see the alternate fastener note on sheet 8.
4. Water–resistive Barriers and Flashing must be installed where required per FBC Sections 1404.2 and 1405.4.
5. The design of the substrate is the responsibility of the Engineer of Record or other Specialty Engineer, and is not a part of this approval. The substrate must safely transmit the loads on this system to the building structure.
6. This Product has been tested per the requirements of the Miami–Dade Plastics checklist. Fire resistance or a fire rating is not apart of this approval.
7. Anchor type, size, spacing, and the embedment shall be as indicated in this approval. Anchor embedment to substrate shall be beyond wall dressing or stucco.
8. All fasteners penetrating into pressure treated wood shall be capable of preventing corrosion due to reaction with pressure treating chemicals.
9. Dissimilar material that come into contact shall be protected to prevent galvanic reactions.
10. Ceramitex Porcelain Ceramic Panel System consists of a Sintered Compact Surface Veneer with a fibreglass reinforced mesh backing with a total thickness of 7.3mm.

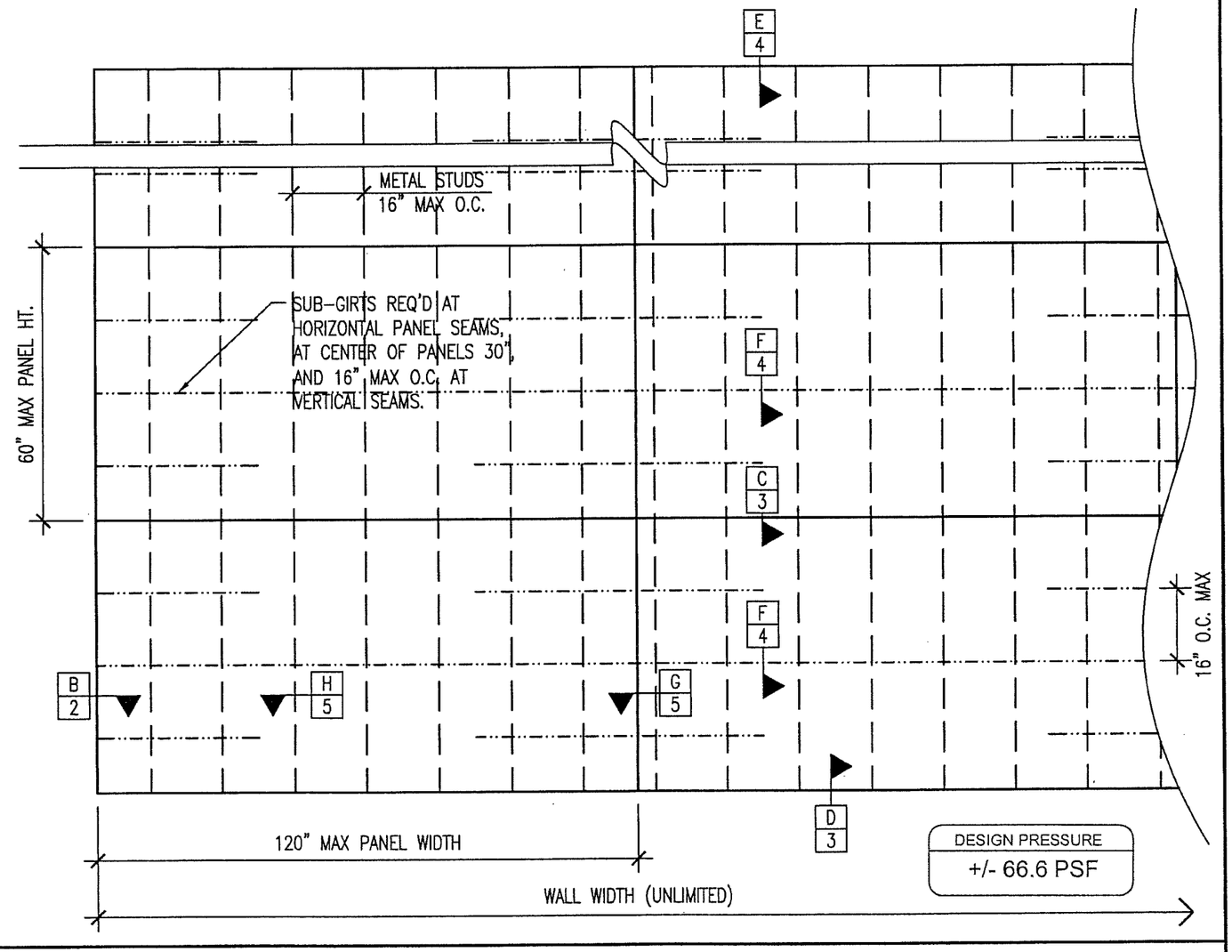

CERAMITEX 6mm+ WALL PANEL

PRODUCT APPROVED
as complying with the Florida Building Code
NOA–No. 16–1004.05
Approval Date 09/06/2018
By
Miami–Dade Product Control

ENGINEER
SCOTT WOLTERS
FL PE# 62354
WOLTERS ENGINEERING
(COA# 27194)
15211 97TH ROAD N
WEST PALM BEACH, FL 33412
(561) 225–1982

SCOTT WOLTERS
No 62354
STATE OF FLORIDA
PROFESSIONAL ENGINEER
DEC 14 2018

DATE	APRIL 6 2018
DRAWING#	
PROJECT#	
DRAWN BY	JWH
REVISION	JUNE 25 2018

MANUFACTURER
ELEMEX INC.
530 ADMIRAL DRIVE
LONDON, ONTARIO N5V 0B2
TEL (844) 435–3639

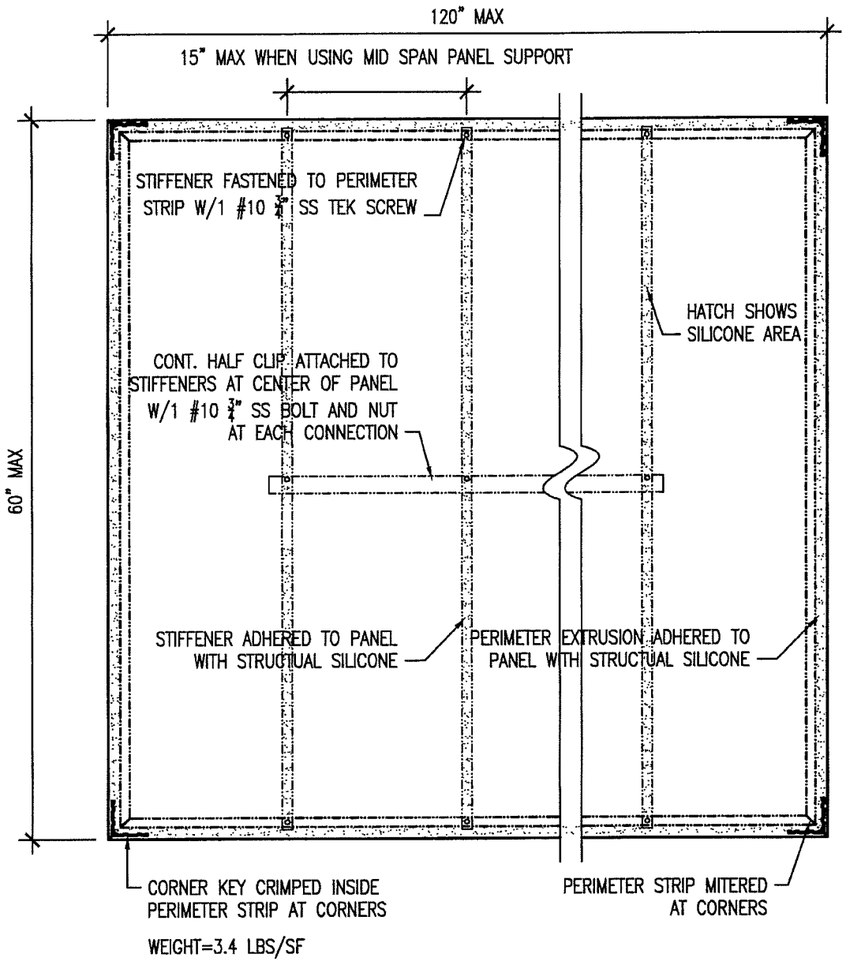

PANEL SHOWING ALUMINUM STRUCTURE

1"=1'-0"

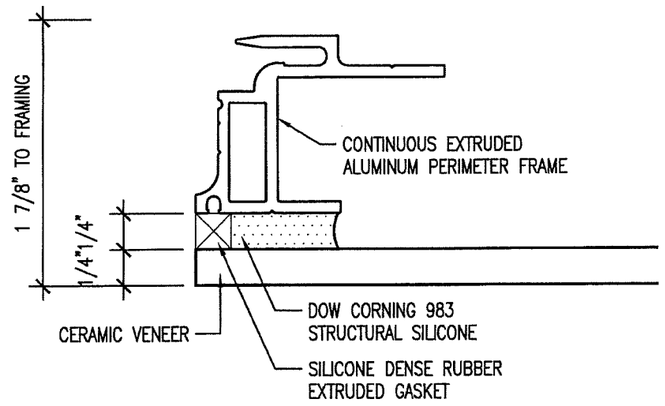

SECTION DETAIL PANEL EDGE

1'-0"=1'-0"

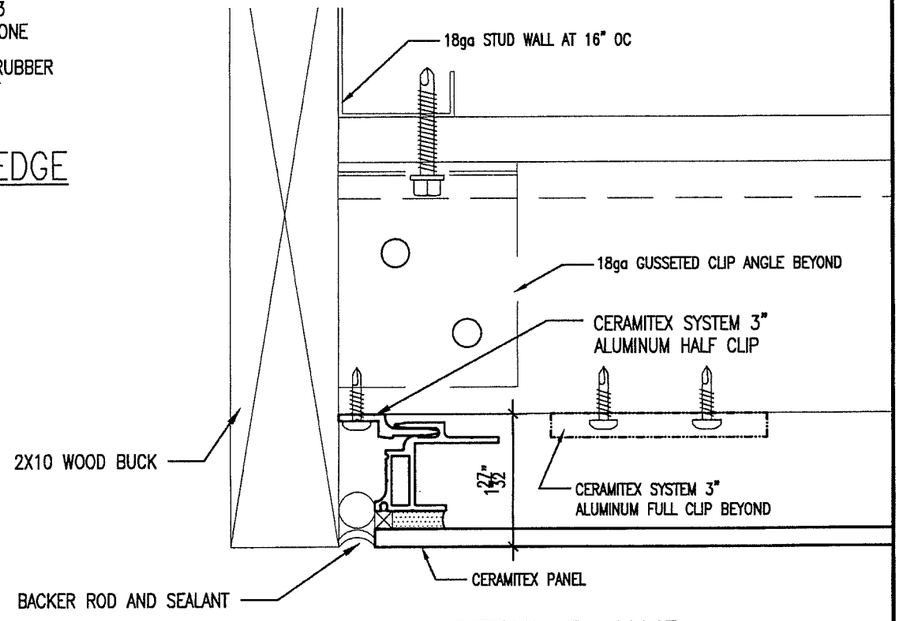

SECTION DETAIL B JAMB

6"=1'-0"

CERAMITEX 6mm+ WALL PANEL

PRODUCT APPROVED
as complying with the Florida Building Code
NOA-No. 16-1004.05
Approval Date 09/06/2018
By
Miami-Dade Product Control

ENGINEER

SCOTT WOLTERS
FL PE# 62354

WOLTERS ENGINEERING
(COA# 27194)
15211 97TH ROAD N
WEST PALM BEACH, FL 33412
(561) 225-1982

SCOTT WOLTERS LICENSE No 62354 STATE OF FLORIDA PROFESSIONAL ENGINEER DEC 14 2018

DATE	APRIL 6 2018
DRAWING#	
PROJECT#	
DRAWN BY	JWH
REVISION	JUNE 25 2018

MANUFACTURER
ELEMEX INC.
530 ADMIRAL DRIVE
LONDON, ONTARIO N5V 0B2
TEL (844) 435-3639

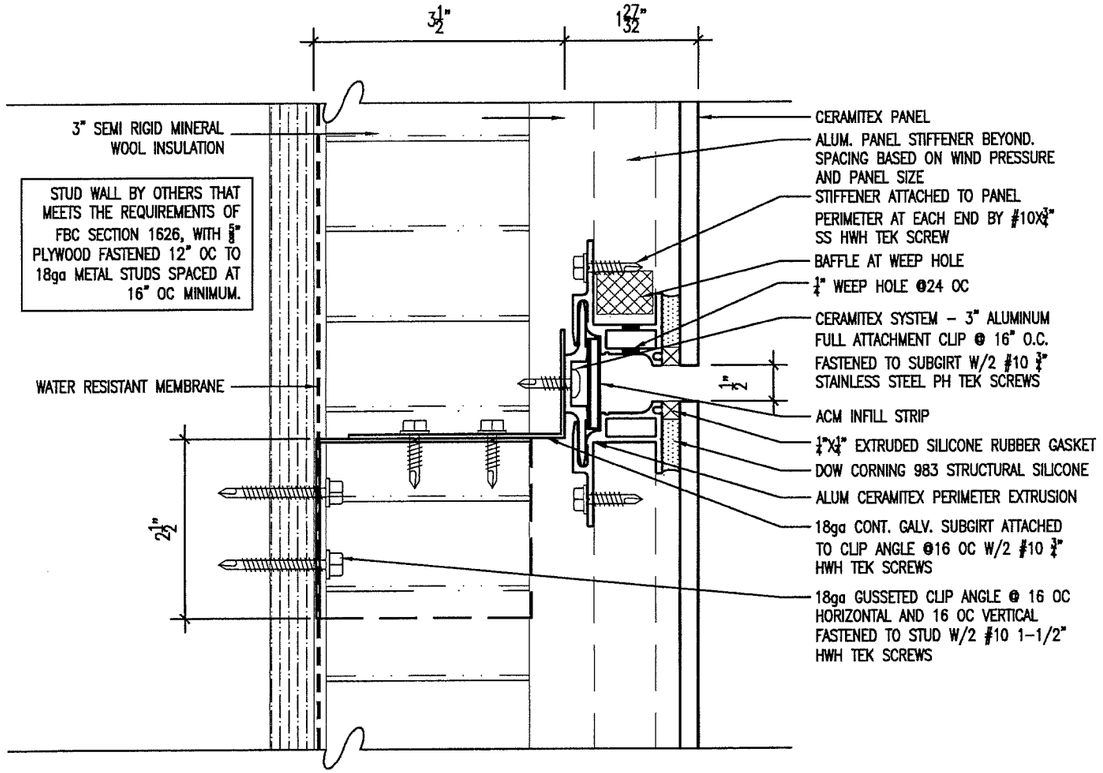

SECTION DETAIL C HORIZONTAL PANEL JOINT

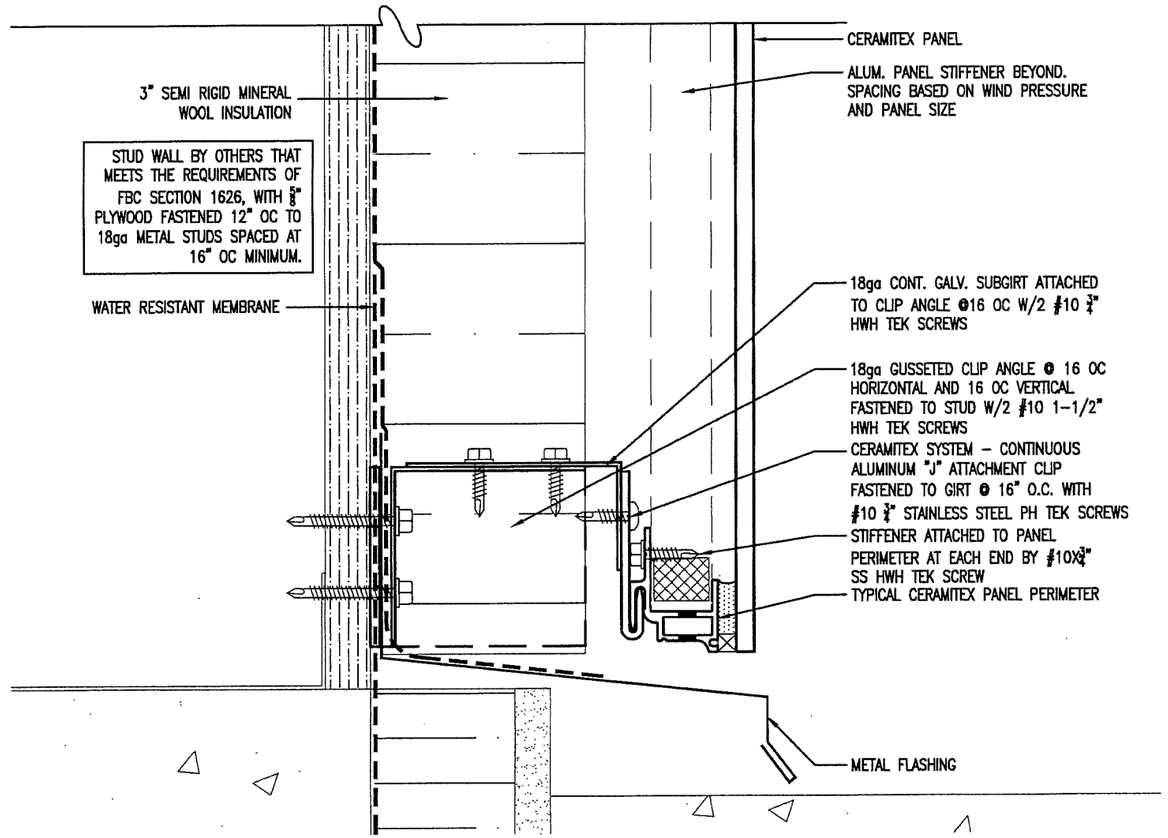

SECTION DETAIL D BASE OF WALL

CERAMITEX 6mm+ WALL PANEL

PRODUCT APPROVED
as complying with the Florida Building Code
NOA-No. 16-1004.05
Approval Date 09/06/2018
By
Miami-Dade Product Control

ENGINEER

SCOTT WOLTERS
FL PE# 62354

WOLTERS ENGINEERING
(COA# 27194)
15211 97TH ROAD N
WEST PALM BEACH, FL 33412
(561) 225-1982

SCOTT WOLTERS LICENSE No 62354 STATE OF FLORIDA PROFESSIONAL ENGINEER DEC 14 2018

DATE	APRIL 6 2018
DRAWING#	
PROJECT#	
DRAWN BY	JWH
REVISION	JUNE 25 2018

MANUFACTURER
ELEMEX INC.
530 ADMIRAL DRIVE
LONDON, ONTARIO N5V 0B2
TEL (844) 435-3639

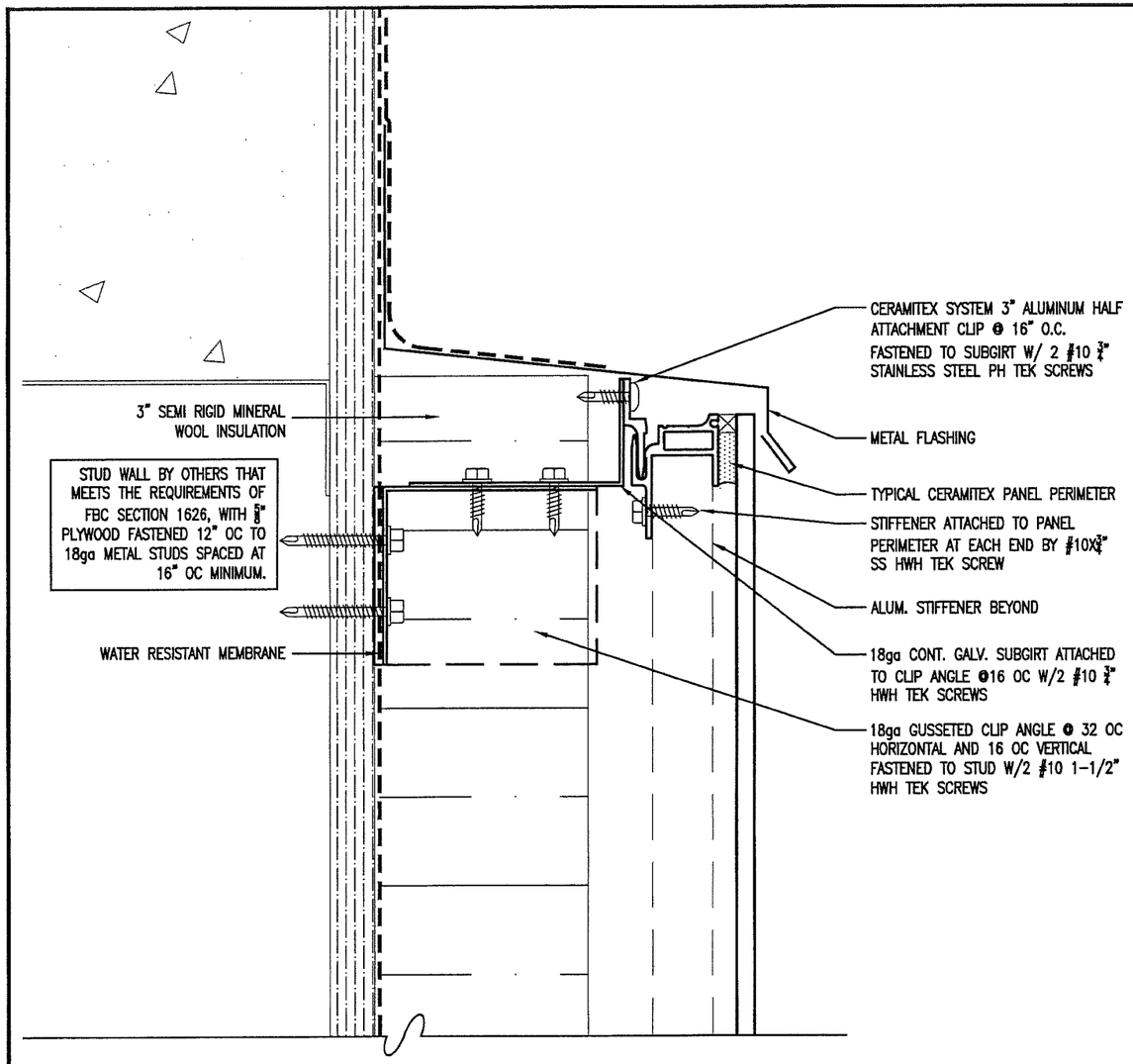

SECTION DETAIL E TOP OF WALL

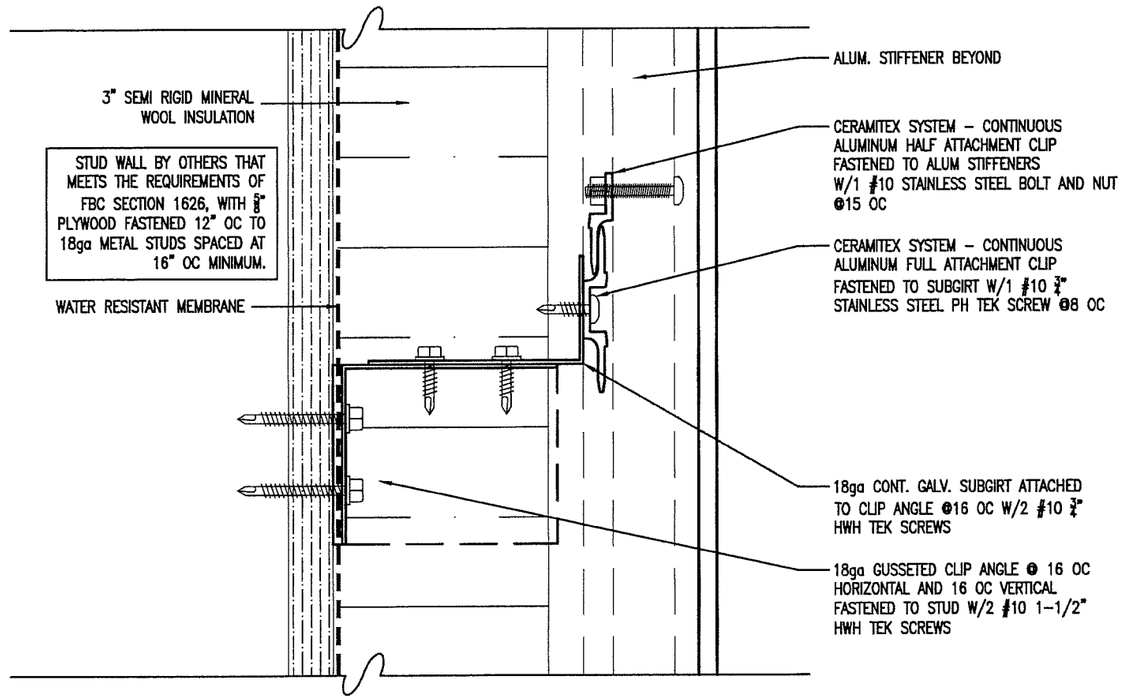

SECTION DETAIL F LARGE PANEL MIDSPAN SUPPORT

CERAMITEX 6mm+ WALL PANEL

PRODUCT APPROVED
as complying with the Florida Building Code
NOA–No. 16–1004.05
Approval Date 09/06/2018
By
Miami–Dade Product Control

ENGINEER
SCOTT WOLTERS
FL PE# 62354
WOLTERS ENGINEERING
(COA# 27194)
15211 97TH ROAD N
WEST PALM BEACH, FL 33412
(561) 225–1982

SCOTT WOLTERS LICENSE No 62354 STATE OF FLORIDA PROFESSIONAL ENGINEER DEC 14 2018

DATE	APRIL 6 2018
DRAWING#	
PROJECT#	
DRAWN BY	JWH
REVISION	JUNE 25 2018

MANUFACTURER
ELEMEX INC.
530 ADMIRAL DRIVE
LONDON, ONTARIO N5V 0B2
TEL (844) 435–3639

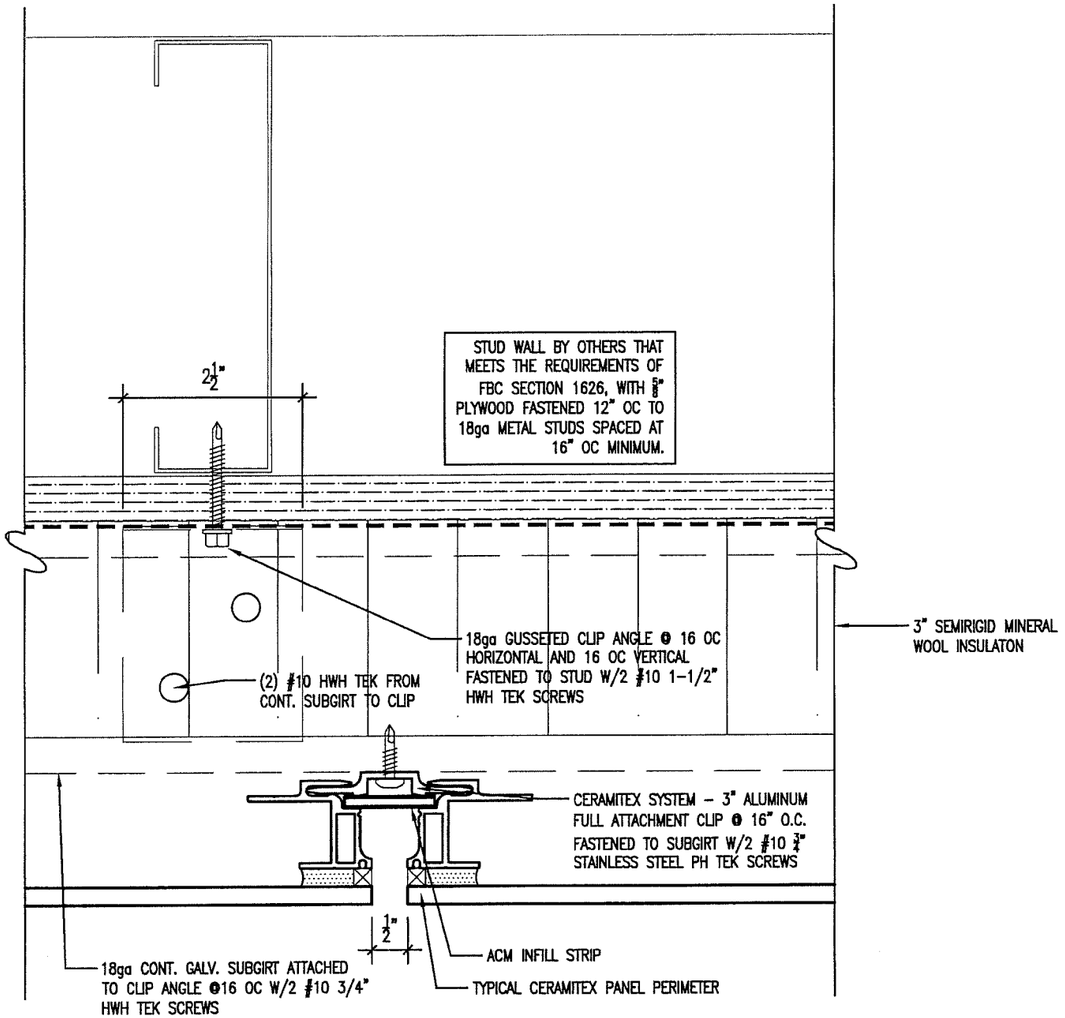

PLAN DETAIL G VERTICAL JOINT

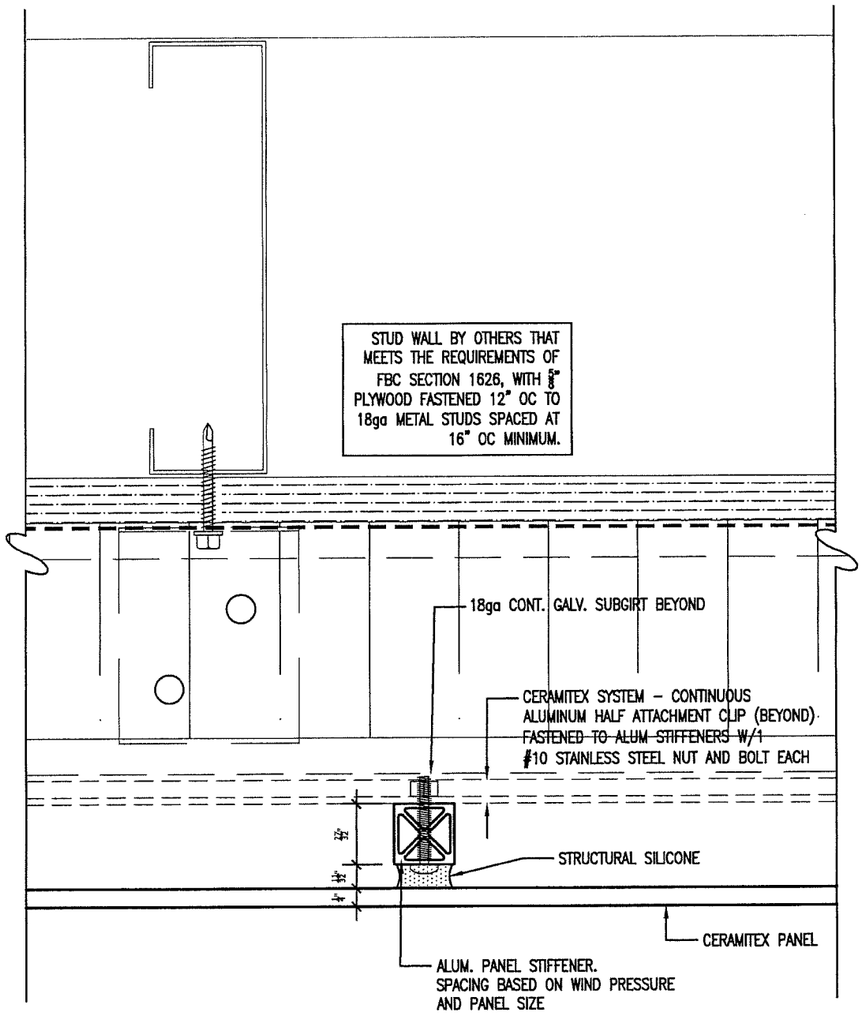

PLAN DETAIL H PANEL INTERNAL STIFFENER

CERAMITEX 6mm+ WALL PANEL

PRODUCT APPROVED
as complying with the Florida Building Code
NOA-No. 16-1004.05
Approval Date 09/06/2018
By
Miami-Dade Product Control

ENGINEER
SCOTT WOLTERS
FL PE# 62354
WOLTERS ENGINEERING
(COA# 27194)
15211 97TH ROAD N
WEST PALM BEACH, FL 33412
(561) 225-1982

SEAL
SCOTT WOLTERS
LICENSED
No 62354
STATE OF FLORIDA
DEC 14 2018
PROFESSIONAL ENGINEER

DATE	APRIL 6 2018
DRAWING#	
PROJECT#	
DRAWN BY	JWH
REVISION	JUNE 25 2018

MANUFACTURER
ELEMEX INC.
530 ADMIRAL DRIVE
LONDON, ONTARIO N5V 0B2
TEL (844) 435-3639

OPTIONAL DETAILS AT WINDOW PENETRATIONS

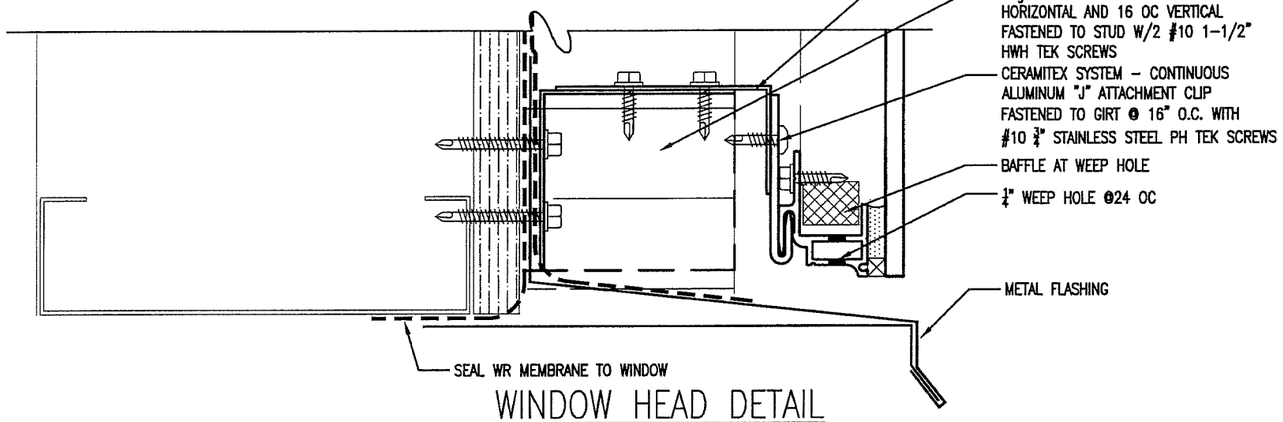

WINDOW HEAD DETAIL

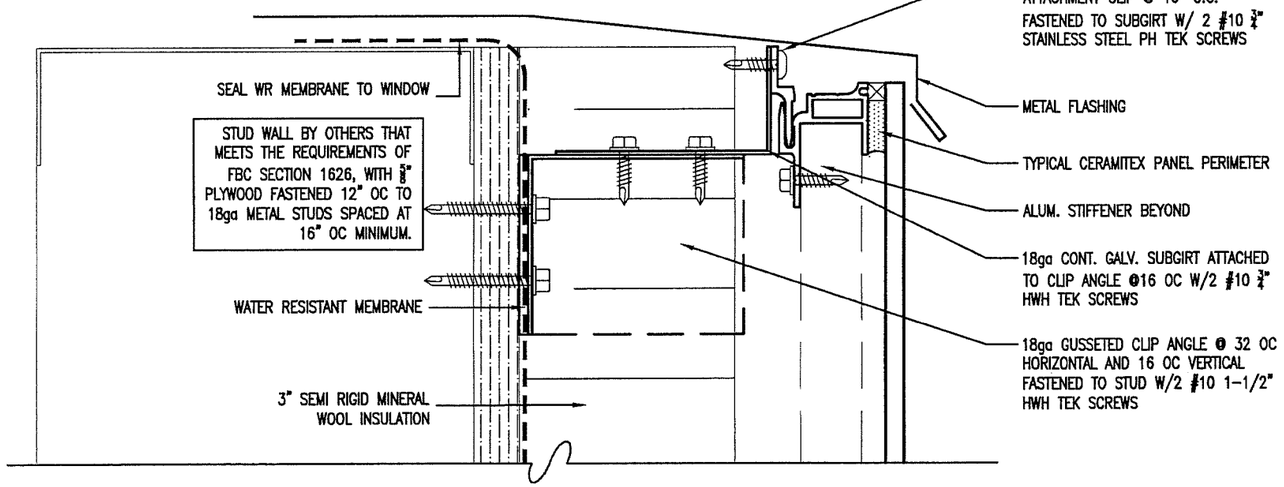

WINDOW SILL DETAIL

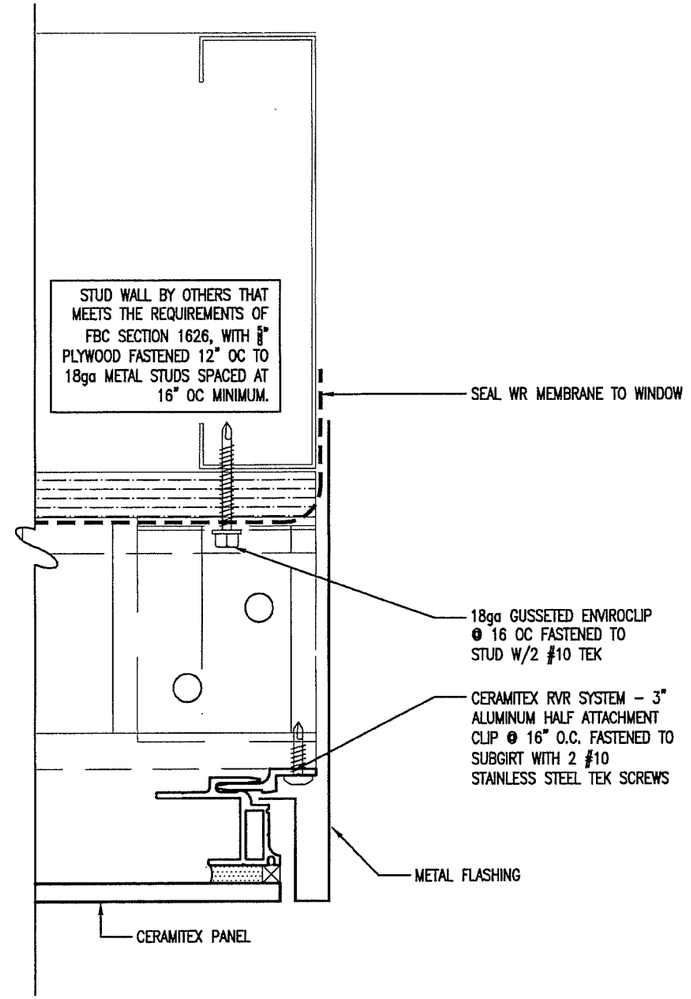

WINDOW JAMB DETAIL

CERAMITEX 6mm+ WALL PANEL

PRODUCT APPROVED
as complying with the Florida Building Code
NOA-No. 16-1004.05
Approval Date 09/06/2018
By
Miami-Dade Product Control

ENGINEER

SCOTT WOLTERS
FL PE# 62354

WOLTERS ENGINEERING
(COA# 27194)
15211 97TH ROAD N
WEST PALM BEACH, FL 33412
(561) 225-1982

SCOTT WOLTERS LICENSE No 62354 STATE OF FLORIDA PROFESSIONAL ENGINEER DEC 14 2018

DATE	APRIL 6 2018
DRAWING#	
PROJECT#	
DRAWN BY	JWH
REVISION	JUNE 25 2018

MANUFACTURER
ELEMEX INC.
530 ADMIRAL DRIVE
LONDON, ONTARIO N5V 0B2
TEL (844) 435-3639

OPTIONAL CORNER DETAILS

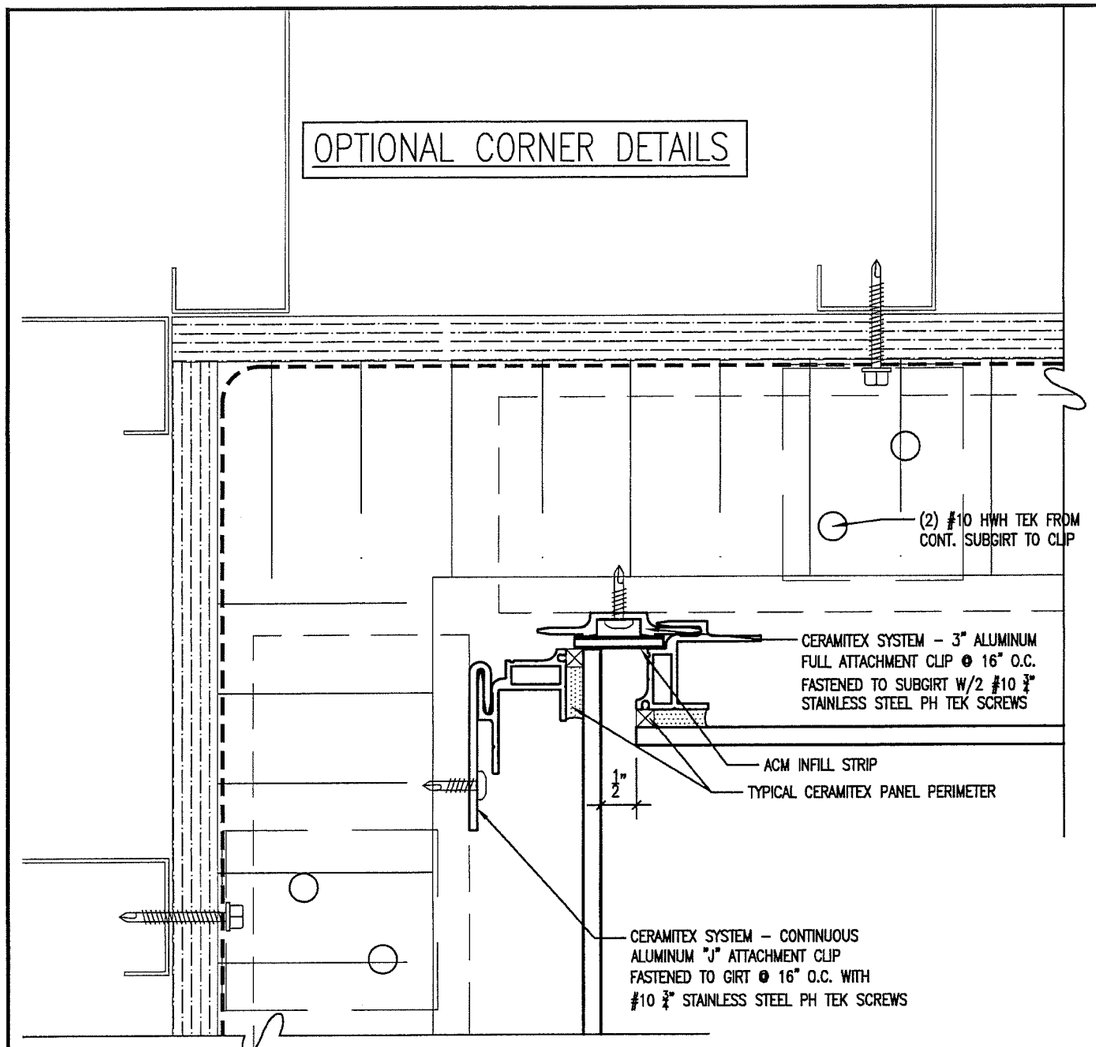

PLAN DETAIL INSIDE CORNER

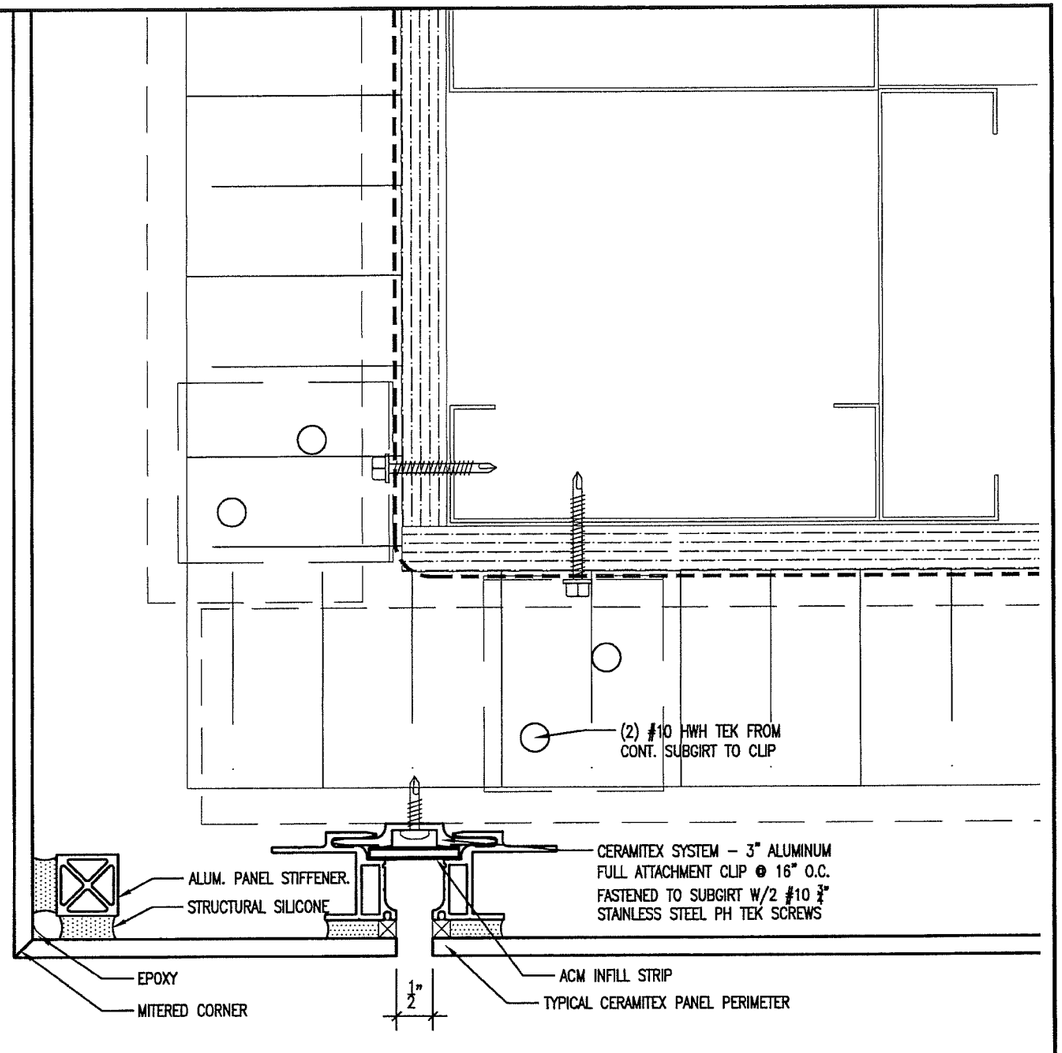

PLAN DETAIL OUTSIDE CORNER

CERAMITEX 6mm+ WALL PANEL

PRODUCT APPROVED
as complying with the Florida Building Code
NOA–No. 16–1004.05
Approval Date 09/06/2018
By
Miami–Dade Product Control

ENGINEER
SCOTT WOLTERS
FL PE# 62354
WOLTERS ENGINEERING
(COA# 27194)
15211 97TH ROAD N
WEST PALM BEACH, FL 33412
(561) 225–1982

SEAL
SCOTT WOLTERS LICENSE No 62354 STATE OF FLORIDA PROFESSIONAL ENGINEER DEC 14 2018

DATE	APRIL 6 2018
DRAWING#	
PROJECT#	
DRAWN BY	JWH
REVISION	JUNE 25 2018

MANUFACTURER
ELEMEX INC.
530 ADMIRAL DRIVE
LONDON, ONTARIO N5V 0B2
TEL (844) 435–3639

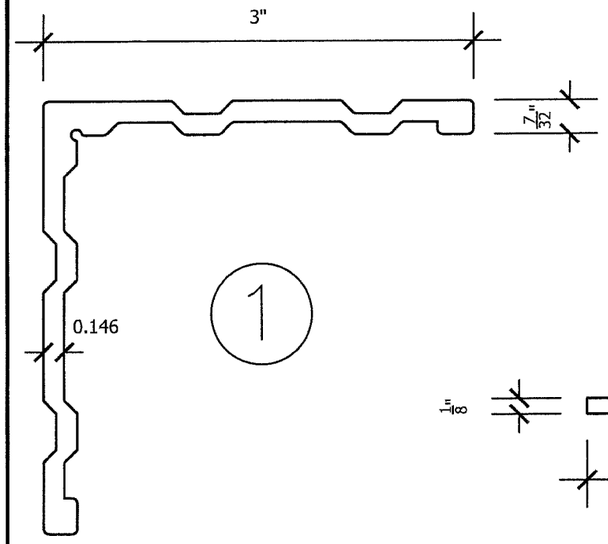

CORNER KEY

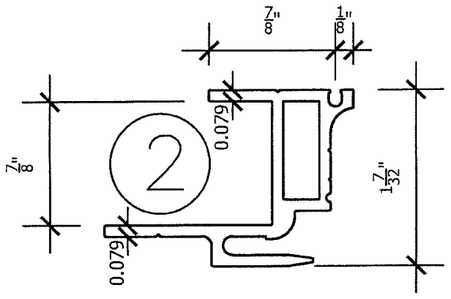

CERAMITEX PERIMETER STRIP
(EXTRUSION)

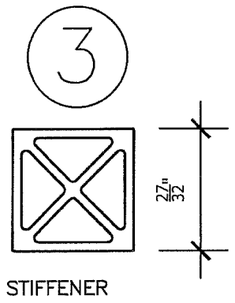

STIFFENER

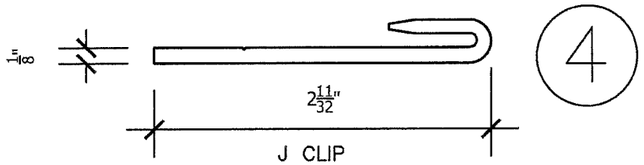

J CLIP

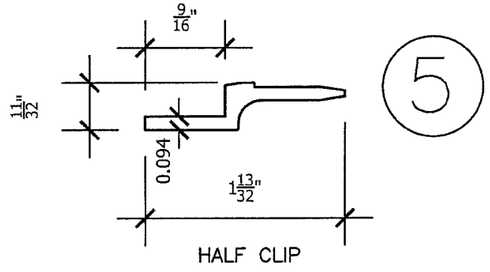

HALF CLIP

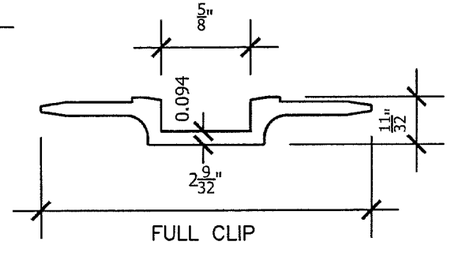

FULL CLIP

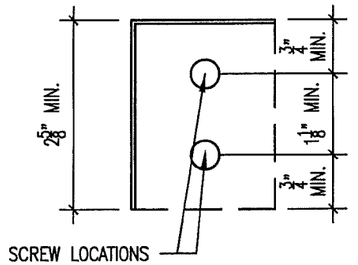

SCREW LOCATIONS

FRONT VIEW OF GUSSET CLIP ON CONC

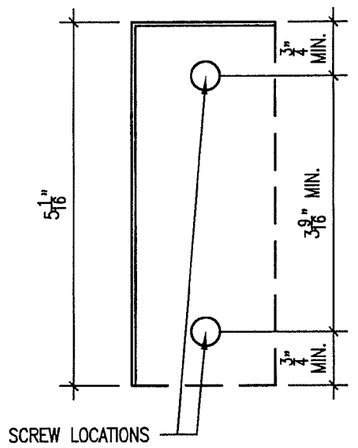

SCREW LOCATIONS

FRONT VIEW OF GUSSET CLIP ON CMU

BILL OF MATERIALS

PART#	DESCRIPTION	MANUFACTURER	MATERIAL
1.	CORNER KEY	CANART	6063–T6
2.	PERIMETER STRIP	CANART	6063–T6
3.	STIFFENER	CANART	6063–T6
4.	J CLIP	CANART	6063–T6
5.	HALF CLIP	CANART	6063–T6
6.	FULL CLIP	CANART	6063–T6

#10 SS BOLT AND NUT TO FASTEN ALUM HALF ATTACHMENT CLIP TO ALUMINUM STIFFENERS AT 15" OC AT MID SPAN OF PANEL

#10 X 1–1/2" HWH TEK SCREWS TO FASTEN 18ga GUSSETED CLIP ANGLE TO 16ga STUD
CLIPS SPACED 16" OC HORIZONTAL AND 16" OC VERTICAL

ALTERNATIVE FASTENER NOTE
AT CONCRETE (2846 psi min) OR GROUT–FILLED CMU (ASTM C–90, 2000 psi GROUT) SUBSTRATES, USE 3/16" Ø ELCO ULTRACONS WITH 1 3/4" MIN. EMBED AND 2 1/2" MIN. EDGE DISTANCE.

#10 HWH TEK SCREWS TO FASTEN 18ga CONTINUOUS SUBGIRT TO 18ga GUSSETED CLIP ANGLE
CLIPS SPACED 16" OC HORIZONTAL AND 16" OC VERTICAL

#10 X 3/4" PAN HEAD STAINLESS STEEL TEK SCREWS TO FASTEN ALUMINUM PANEL CLIPS TO 18ga CONTINUOUS SUBGIRT.

FASTENER TYPES

CERAMITEX 6mm+ WALL PANEL

PRODUCT APPROVED
as complying with the Florida Building Code
NOA–No. 16–1004.05
Approval Date 09/06/2018
By
Miami–Dade Product Control

ENGINEER

SCOTT WOLTERS
FL PE# 62354

WOLTERS ENGINEERING
(COA# 27194)
15211 97TH ROAD N
WEST PALM BEACH, FL 33412
(561) 225–1982

SEAL
SCOTT WOLTERS
LICENSE
No 62354
STATE OF
FLORIDA
PROFESSIONAL ENGINEER
DEC 14 2018

DATE	APRIL 6 2018
DRAWING#	
PROJECT#	
DRAWN BY	JWH
REVISION	JUNE 25 2018

MANUFACTURER
ELEMEX INC.
530 ADMIRAL DRIVE
LONDON, ONTARIO N5V 0B2
TEL (844) 435–3639