MIAMI-DADE COUNTY
PRODUCT CONTROL SECTION
11805 SW 26 Street, Room 208
Miami, Florida 33175-2474
T (786) 315-2590 F (786) 315-2599
www.miamidade.gov/economy

DEPARTMENT OF REGULATORY AND ECONOMIC RESOURCES (RER)
BOARD AND CODE ADMINISTRATION DIVISION

NOTICE OF ACCEPTANCE (NOA)

United Enertech Corp.
3005 South Hickory Street
Chattanooga, TN 37407

SCOPE: This NOA is being issued under the applicable rules and regulations governing the use of construction materials. The documentation submitted has been reviewed and accepted by Miami-Dade County RER-Product Control Section to be used in Miami Dade County and other areas where allowed by the Authority Having Jurisdiction (AHJ).

This NOA shall not be valid after the expiration date stated below. The Miami-Dade County Product Control Section (In Miami Dade County) and/or the AHJ (in areas other than Miami Dade County) reserve the right to have this product or material tested for quality assurance purposes. If this product or material fails to perform in the accepted manner, the manufacturer will incur the expense of such testing and the AHJ may immediately revoke, modify, or suspend the use of such product or material within their jurisdiction. RER reserves the right to revoke this acceptance, if it is determined by Miami-Dade County Product Control Section that this product or material fails to meet the requirements of the applicable building code. This product is approved as described herein, and has been designed to comply with the Florida Building Code, including the High Velocity Hurricane Zone.

DESCRIPTION: Model FL-D-6 Aluminum Louver System

APPROVAL DOCUMENT: Drawing No. **15-025**, titled "Aluminum Louver System Model FL-D-6, sheets 1 through 15 of 15, dated 03/16/2015, prepared by Tilteco, Inc, signed and sealed by Walter A. Tillit, Jr., P.E. on 03/31/2015, bearing the Miami-Dade County Product Control revision stamp with the Notice of Acceptance number and expiration date by the Miami-Dade County Product Control Section.

MISSILE IMPACT RATING: Large and Small Missile Impact Resistant

LABELING: Each unit shall bear a permanent label with the manufacturer's name or logo, city, state, model/series, and following statement: "Miami-Dade County Product Control Approved", unless otherwise noted herein.

LIMITATION: This louver has not been evaluated for compliance with the impact testing standard ANSI/AMCA 540.

RENEWAL of this NOA shall be considered after a renewal application has been filed and there has been no change in the applicable building code negatively affecting the performance of this product.

TERMINATION of this NOA will occur after the expiration date or if there has been a revision or change in the materials, use, and/or manufacture of the product or process. Misuse of this NOA as an endorsement of any product, for sales, advertising or any other purposes shall automatically terminate this NOA. Failure to comply with any section of this NOA shall be cause for termination and removal of NOA.

ADVERTISEMENT: The NOA number preceded by the words Miami-Dade County, Florida, and followed by the expiration date may be displayed in advertising literature. If any portion of the NOA is displayed, then it shall be done in its entirety.

INSPECTION: A copy of this entire NOA shall be provided to the user by the manufacturer or its distributors and shall be available for inspection at the job site at the request of the Building Official.

This NOA **revises NOA # 15-1008.04** and consists of this page 1 and evidence pages E-1 and E-2, as well as approval document mentioned above.

The submitted documentation was reviewed by **Carlos M. Utrera, P.E.**

MIAMI-DADE COUNTY APPROVED

01/25/2017

NOA No. 16-1013.11
Expiration Date: January 17, 2021
Approval Date: November 10, 2016

NOTICE OF ACCEPTANCE: EVIDENCE SUBMITTED

A. DRAWINGS ***"Submitted under NOA # 15-0420.04"***

1. Drawing No. **15-025,** titled "Aluminum Louver System Model FL-D-6, sheets 1 through 15 of 15, dated 03/16/2015, prepared by Tilteco, Inc, signed and sealed by Walter A. Tillit, Jr., P.E. on 03/31/2015.

B. TESTS ***"Submitted under NOA # 11-0104.03"***

1. Test reports on 1) Uniform Static Air Pressure Test, Loading per FBC, TAS 202-94
   2) Large Missile Impact Test per FBC, TAS 201-94
   3) Cyclic Wind Pressure Loading per FBC, TAS 203-94

   Along with marked-up drawings and installation diagram of a Model FLD-4 Aluminum Louver System, prepared by American Test Lab of South Florida, Test Report No. **1207.01-10,** dated 12/22/2010, signed and sealed by Julio E. Gonzalez, P.E.

C. CALCULATIONS ***"Submitted under NOA # 15-0420.04"***

1. Revision to aluminum louver system Model FL-D-6 prepared by Tilteco Inc, dated 03/16/2015, signed and sealed by Walter A. Tillit Jr., P.E.

"Submitted under NOA # 11-0104.03"

2. Revision to aluminum louver system Model FL-D-6 prepared by Tilteco Inc, dated 12/09/2014, signed and sealed by Walter A. Tillit Jr., P.E.

"Submitted under NOA # 08-0902.09"

3. Revision to Aluminum Louver System Model FL-D-6, prepared by Tilteco Inc, dated 08/21/2008, sheets 1 through 134 of 134, complying with F.B.C. 2007, signed and sealed by Walter A. Tillit Jr., P.E.

D. QUALITY ASSURANCE

1. Miami-Dade Department of Regulatory and Economic Resources (RER)

E. MATERIAL CERTIFICATIONS ***"Submitted under NOA # 11-0104.03"***

1. Test report on Tensile Test per ASTM E8, issued by QC Metallurgical, Inc., dated 12/21/2010, signed and sealed by Frank E. Grate Jr., P.E.

01/25/2017

Carlos M. Utrera, P.E.
Product Control Examiner
NOA No. 16-1013.11
Expiration Date: January 17, 2021
Approval Date: November 10, 2016

NOTICE OF ACCEPTANCE: EVIDENCE SUBMITTED

F. STATEMENTS ***"Submitted under NOA # 15-0420.04"***

1. Statement letter of code conformance to the 5th edition (2014) FBC issued by Tilteco, Inc, dated 03/31/2015, signed and sealed by Walter A. Tillit Jr., P.E.

"Submitted under NOA # 12-0120.06"

2. Statement letter of code conformance to 2010 FBC issued by Tilteco, Inc, dated 01/16/2012, signed and sealed by Walter A. Tillit Jr., P.E.

"Submitted under NOA # 11-0104.03"

2. Statement letter of no financial interest issued by Tilteco, Inc, dated 12/23/2010, signed and sealed by Walter A. Tillit Jr., P.E.

01/25/2017

Carlos M. Utrera, P.E.
Product Control Examiner
NOA No. 16-1013.11
Expiration Date: January 17, 2021
Approval Date: November 10, 2016

GENERAL NOTES:

1. ALUMINUM LOUVER SYSTEM SHOWN ON THIS PRODUCT APPROVAL DOCUMENT (P.A.D.) HAS BEEN VERIFIED FOR CODE COMPLIANCE IN ACCORDANCE WITH THE 2014 (5th EDITION) OF THE FLORIDA BUILDING CODE. THIS PRODUCT MAY BE INSTALLED WITHIN HIGH VELOCITY HURRICANE ZONES.

DESIGN WIND LOADS SHALL BE DETERMINED AS PER SECTION 1620 OF THE ABOVE MENTIONED CODE, USING ASCE 7–10 AND SHALL NOT EXCEED THE MAXIMUM (A.S.D.) DESIGN PRESSURE RATINGS INDICATED ON THIS SHEET.

IN ORDER TO VERIFY THE ABOVE CONDITION, ULTIMATE DESIGN WIND LOADS DETERMINED PER ASCE 7–10 SHALL BE FIRST REDUCED TO A.S.D. DESIGN WIND LOADS BY MULTIPLYING THEM BY 0.6 IN ORDER TO COMPARE THESE W/ MAX. (A.S.D) DESIGN PRESSURE RATINGS INDICATED ON THIS SHEET.

IN ORDER TO VERIFY THAT COMPONENTS AND ANCHORS ON THIS P.A.D AS TESTED WERE NOT OVER STRESSED, A 33% INCREASE IN ALLOWABLE STRESS FOR WIND LOADS WAS NOT USED IN THEIR ANALYSIS. A DURATION FACTOR CD=1.60 WAS USED FOR VERIFICATION OF FASTENERS SPACINGS IN WOOD.

ALUMINUM LOUVER SYSTEM'S ADEQUACY FOR IMPACT AND FATIGUE RESISTANCE HAS BEEN VERIFIED IN ACCORDANCE WITH SECTION **1626** OF THE ABOVE MENTIONED CODE AS PER AMERICAN TESTING LAB OF SOUTH FLORIDA REPORTS # 0604.01–01 AND 1207.01–10 AS PER TAS–201, TAS–202 & TAS–203 PROTOCOLS, AS WELL AS PER ANSI/AMCA IMPACT STANDARD 540–08, PER INTERTEK/ARCHITECTURAL TESTING REPORT # E 0370.01–550–18.

2. ALL ALUMINUM EXTRUSIONS SHALL BE 6063–T6 ALLOY (UNLESS OTHERWISE NOTED).

3. ALL SCREWS TO BE STAINLESS STEEL 304 OR 316 SERIES W/ 50 ksi YIELD STRENGTH AND 90 ksi TENSILE STRENGTH OR CORROSION RESISTANT COATED CARBON STEEL AS PER DIN 50018. THRU BOLTS AT MULLION TO BE ASTM A–307 GALVANIZED STEEL OR AISI 304 SERIES STAINLESS STEEL SCREWS AND BOLTS SHALL COMPLY W/ FLORIDA BUILDING CODE SECTION 2411.3.3.4.

4. ALL ALUMINUM COMPONENTS FRAMING SHALL BE WELDED IN ACCORDANCE WITH AWS D1.2 ,PER THE AMERICAN WELDING SOCIETY LATEST EDITION REGULATIONS USE CERTIFIED WELDERS. USE ER–5356 ELECTRODES.

5. JAMB ANCHOR REQUIREMENTS: EMBEDMENT AND EDGE DISTANCE ARE BEYOND ANY FINISH.
(A) TO EXISTING POURED CONCRETE: (MIN. f'c = 3192 psi), MIN. EDGE DISTANCE (E.D.) = 2 1/2".
– 1/4"ø TAPCON ANCHORS W/ 1 3/4" MIN. EMBEDMENT, AS MANUFACTURED BY ITW BUILDEX.

(B) TO EXISTING A.S.T.M. C–90 CONCRETE BLOCK WALL. MIN. EDGE DISTANCE (E.D.) = 2 1/2".
– 1/4"ø TAPCON ANCHORS W/ 1 1/4" MIN. EMBEDMENT, AS MANUFACTURED BY ITW BUILDEX.

(C) TO EXISTING 2x P.T. WOOD BUCK. MIN. EDGE DISTANCE (E.D.) = 1 1/2".
– 1/4"ø LAG SCREWS W/ 1 1/2" MIN. EMBEDMENT, AS PER N.D.S. 2012

(D) TO EXISTING MIN. 1/8" THICK STEEL MEMBER (ASTM A–500, A–653 OR A–36) MIN. EDGE DISTANCE (E.D.) = 1/2".
– 1/4"øx3/4", AS MANUFACTURED BY ITW BUILDEX.

(E) ANCHORS SHALL BE INSTALLED FOLLOWING ALL OF THE RECOMMENDATIONS AND SPECIFICATIONS OF THE ANCHOR'S MANUFACTURER.

6. ANCHORS REQUIRED FOR MULLION CONNECTIONS SHALL BE AS SPECIFIED ON APPLICABLE SECTIONS SHOWN ON SHEETS 6, 7 & 8 RESPECTIVELY, AND SHEETS 10, 11, 12, 13 AND 14 RESPECTIVELY.

ANCHORS SHALL BE INSTALLED FOLLOWING ALL OF THE RECOMMENDATIONS AND SPECIFICATIONS OF THE ANCHOR'S MANUFACTURER.

7. THIS LOUVER SHALL BE ONLY INSTALLED IN A LOCATION WHERE THE ROOM BEHIND THE LOUVER IS DESIGNED TO DRAIN WATER PENETRATING INTO THE ROOM, AND THE ROOM WILL HOUSE WATER RESISTENT/WATER PROOF EQUIPMENT, COMPONENTS OR SUPPLIES.

8. IT SHALL BE RESPONSIBILITY OF THE CONTRACTOR TO VERIFY THE SOUNDNESS OF THE STRUCTURE WHERE LOUVER SYSTEM IS TO BE ATTACHED TO INSURE PROPER ANCHORAGE.

9. WOOD BUCKS BY OTHERS, MUST BE ANCHORED PROPERLY TO TRANSFER LOADS TO THE BUILDING STRUCTURE. WOOD BUCKS MUST BE SOUTHERN PINE, G = 0.55.

10. (A) THIS PRODUCT APPROVAL DOCUMENT (P.A.D.) PREPARED BY THIS ENGINEER IS GENERIC AND DOES NOT PROVIDE INFORMATION FOR A SITE SPECIFIC PROJECT; i.e. WHERE THE SITE CONDITIONS DEVIATE FROM THE P.A.D.

(B) CONTRACTOR TO BE RESPONSIBLE FOR THE SELECTION INCLUDING LIFE SAFETY, PURCHASE AND INSTALLATION OF THIS PRODUCT BASED ON THIS PRODUCT APPROVAL PROVIDED HE/SHE DOES NOT DEVIATE FROM THE CONDITIONS DETAILED ON THIS DOCUMENT. CONSTRUCTION SAFETY AT SITE IS THE CONTRACTOR'S RESPONSIBILITY.

(C) THIS PRODUCT APPROVAL DOCUMENT WILL BE CONSIDERED INVALID IF MODIFIED.

(D) SITE SPECIFIC PROJECTS SHALL BE PREPARED BY A FLORIDA REGISTERED ENGINEER OR ARCHITECT WHICH WILL BECOME THE PROFESSIONAL OF RECORD (P.O.R) FOR THE PROJECT AND WHO WILL BE RESPONSIBLE FOR THE PROPER USE OF THE P.A.D.

(E) ORIGINAL P.A.D SHALL BEAR THE DATE AND ORIGINAL SEAL AND SIGNATURE OF THE PROFESSIONAL ENGINEER OR RECORD THAT PREPARED IT.

11. PRODUCT MANUFACTURER'S LABEL SHALL BE LOCATED ON A READILY VISIBLE LOCATION AT PRODUCT IN ACCORDANCE WITH SECTION 1710.8.3 OF FLORIDA BUILDING CODE. ONE LABEL SHALL BE PLACED FOR EVERY OPENING. LABELING TO COMPLY WITH SECTION 1710.8.2 OF THE FLORIDA BUILDING CODE.

MAXIMUM A.S.D. DESIGN PRESSURE RATING +150.0, –150.0 psf.
LARGE MISSILE IMPACT RESISTANCE.

THIS DRAWING SHALL ONLY BE USED TO OBTAIN PERMITS IN THE STATE OF FLORIDA

PRODUCT REVISED
as complying with the Florida Building Code
NOA–No. 16-1013.11
Expiration Date 01/17/2021
By
Miami–Dade Product Control

WALTER A. TILLIT JR. LICENSE No. 44167 STATE OF FLORIDA PROFESSIONAL ENGINEER
P.E. SEAL/SIGNATURE/DATE

FLORIDA BUILDING CODE (HIGH VELOCITY HURRICANE ZONE)

©2015 TILTECO, INC

TILTECO INC.
TILLIT TESTING & ENGINEERING COMPANY
6355 N.W. 36th. St., Ste. 305, VIRGINIA GARDENS, FL 33166
Phone : (305)871–1530, Fax : (305)871–1531
e–mail: tilteco@aol.com
EB–0006719
WALTER A. TILLIT Jr. P.E.
FLORIDA Lic. # 44167

ALUMINUM LOUVER SYSTEM
MODEL FL–D–6

UNITED ENERTECH, CORP.

3005 S. HICKORY STREET,
CHATTANOOGA, TN, 37407
PHONE: (423)698–7715 FAX: (423)698–6629

REV. No	DESCRIPTION	DATE	REV. No	DESCRIPTION	DATE
1	OLD 14–088	03/18/15	3	–	–
2			4	–	–

DRAWN BY F.R.L.
03/16/15 DATE
15–025 DRAWING No
SHEET 1 OF 15

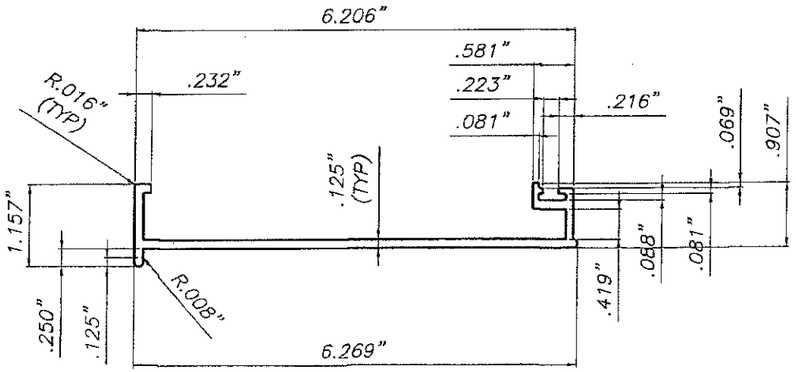

① 6" TOP BLADE
SCALE: 3/8"=1"

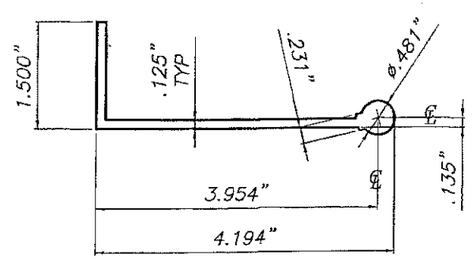

③ 6" BLADE SUPPORT
SCALE: 3/8"=1"

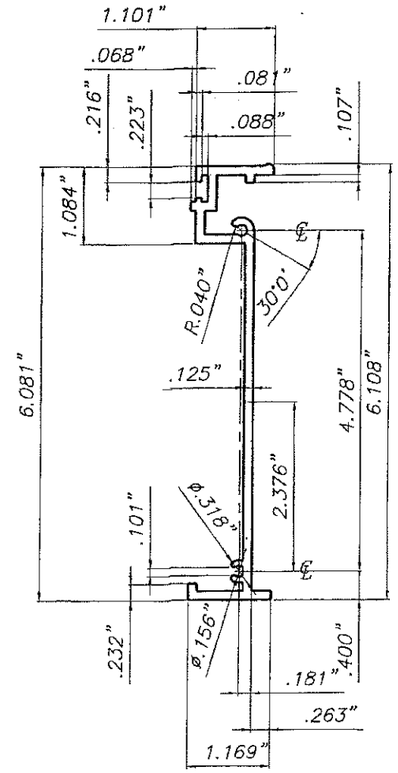

⑤ 6" SIDE JAMB
SCALE: 3/8"=1"

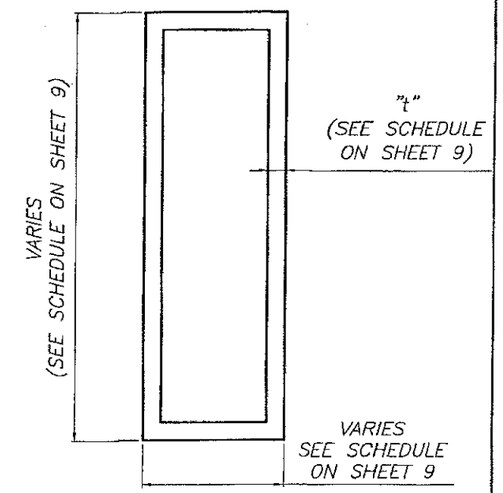

⑦ MULLION
6063-T6 ALLOY
SCALE: 3/8"=1"

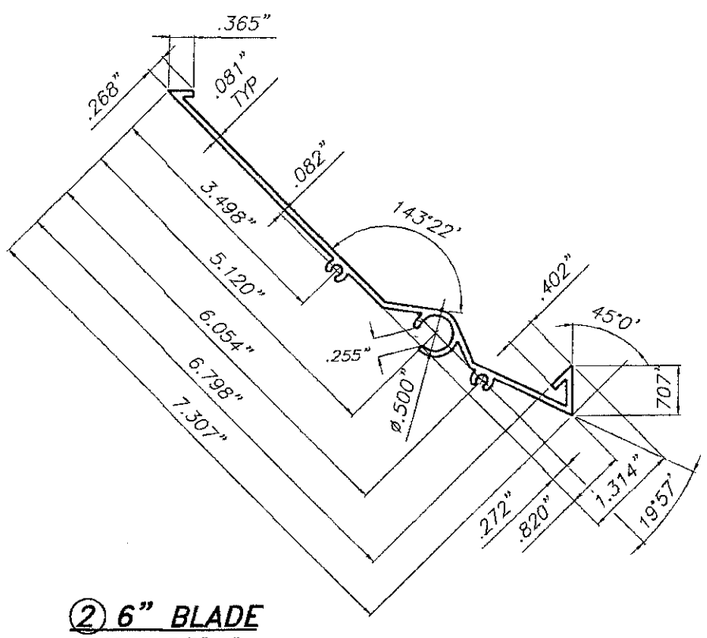

② 6" BLADE
SCALE: 3/8"=1"

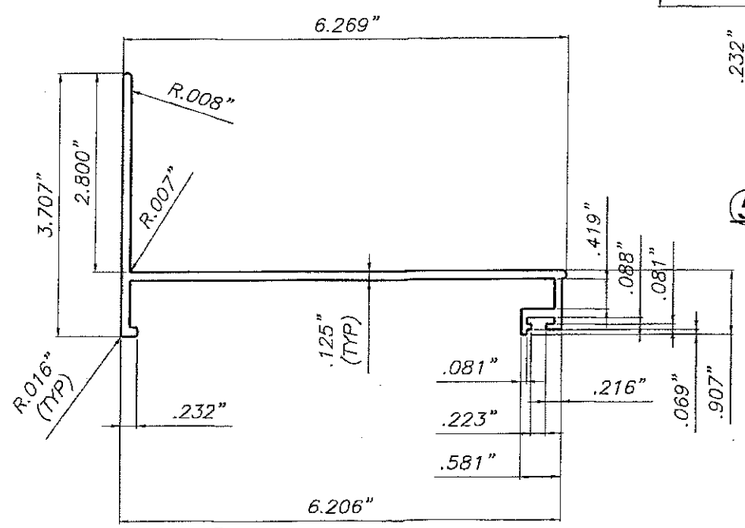

④ 6" BOTTOM BLADE
SCALE: 3/8"=1"

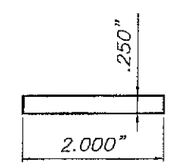

⑥ LOUVER IMPACT STRAP
6463-T6 ALLOY
SCALE: 3/8"=1"

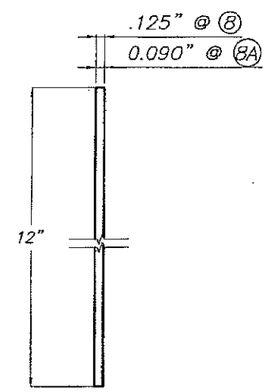

⑧ & ⑧A ALUMINUM SLEEVES
(OPTIONAL)
3003-H14 ALLOY

COMPONENTS

PRODUCT REVISED
as complying with the Florida Building Code
NOA-No. 16-1013.11
Expiration Date 01/17/2021
By
Miami-Dade Product Control

WALTER A. TILLIT JR. LICENSE No. 44167 STATE OF FLORIDA PROFESSIONAL ENGINEER
P.E. SIGNATURE & DATE

FLORIDA BUILDING CODE (HIGH VELOCITY HURRICANE ZONE)

©2015 TILTECO, INC

TILTECO INC.
TILLIT TESTING & ENGINEERING COMPANY
6395 N.W. 36th. St., Ste. 305, VIRGINIA GARDENS, Fl. 33166
Phone : (305)871-1530. Fax : (305)871-1531
e-mail: tilteco@aol.com
EB-0006719
WALTER A. TILLIT Jr. P.E.
FLORIDA Lic. # 44167

ALUMINUM LOUVER SYSTEM
MODEL FL-D-6

UNITED ENERTECH, CORP.
3005 S. HICKORY STREET,
CHATTANOOGA, TN, 37407
PHONE: (423)698-7715 FAX: (423)698-6629

REV. No	DESCRIPTION	DATE	REV. No	DESCRIPTION	DATE
1	OLD 14-098	03/16/15	3	–	–
2			4	–	–

DRAWN BY F.R.L.
03/16/15 DATE
15-025 DRAWING No
SHEET 2 OF 15

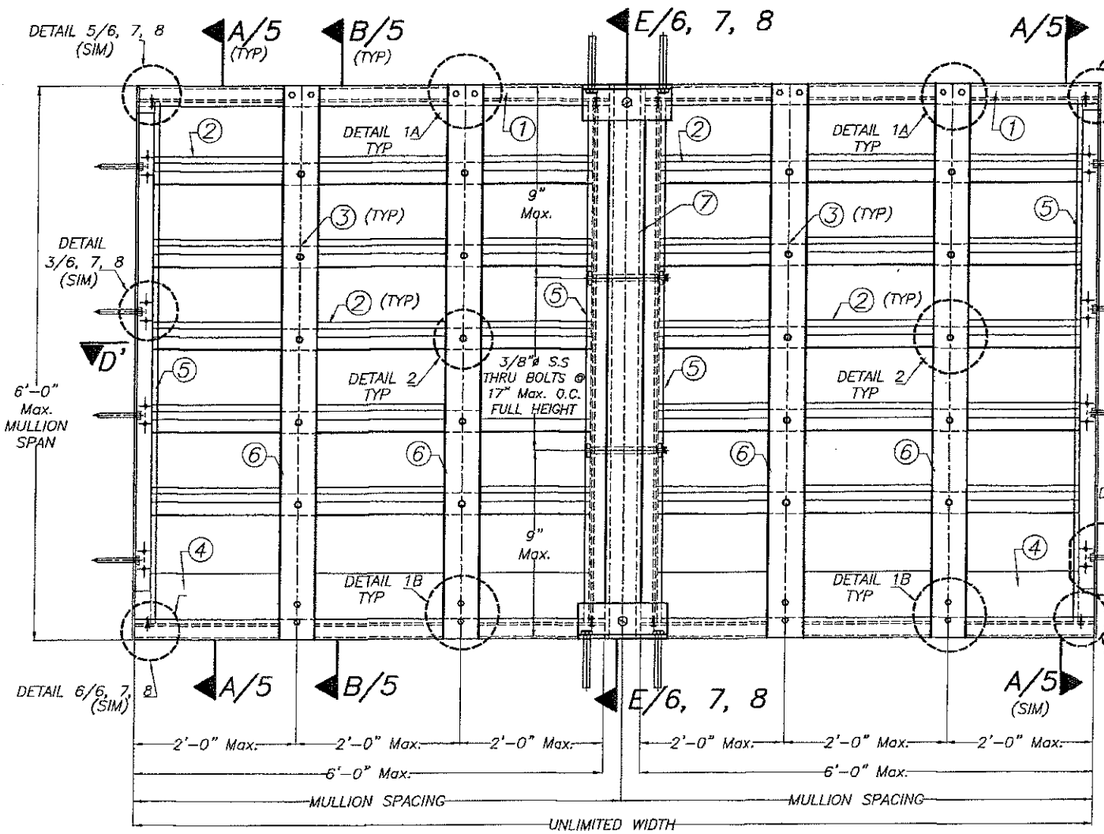

MULTIPLE UNITS HORIZONTALLY EXPANDED (INTERIOR ELEVATION)
N.T.S.

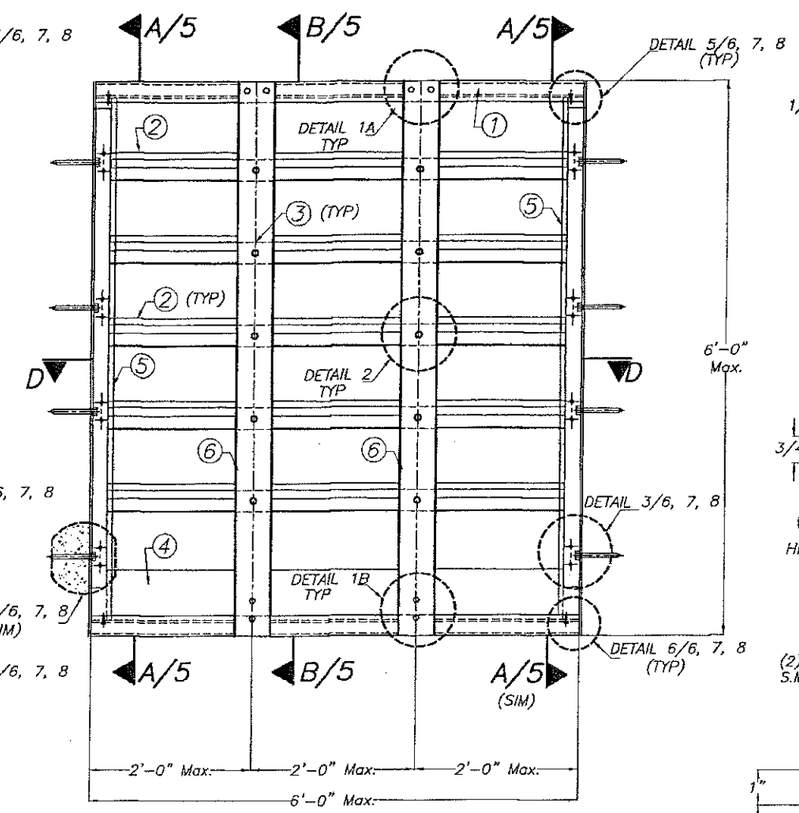

SINGLE UNIT (INTERIOR ELEVATION)
N.T.S.

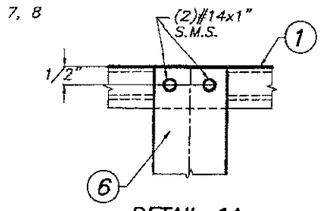

DETAIL 1A
N.T.S.

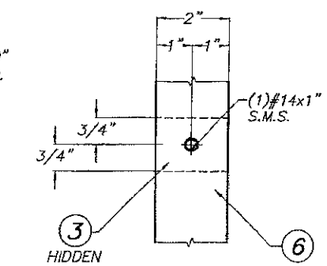

DETAIL 2
N.T.S.

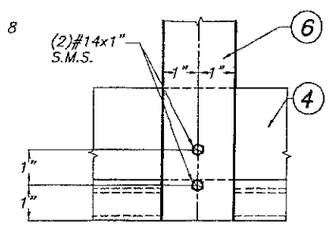

DETAIL 1B
N.T.S.

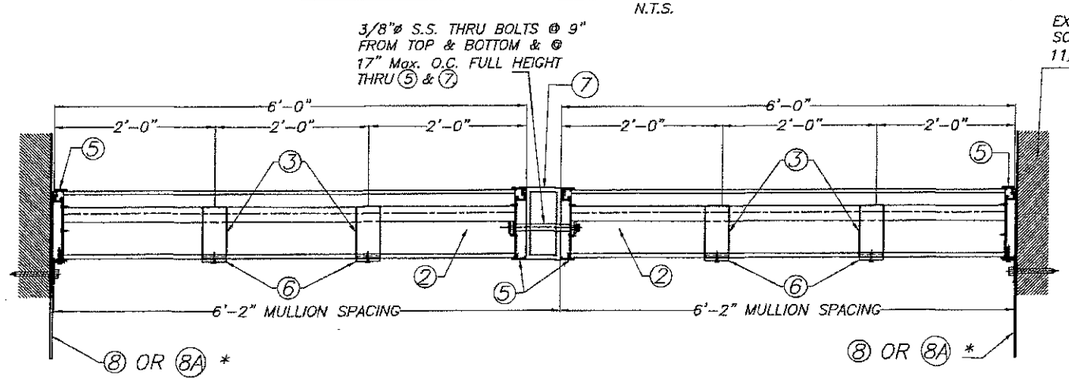

SECTION D'–D'
N.T.S.

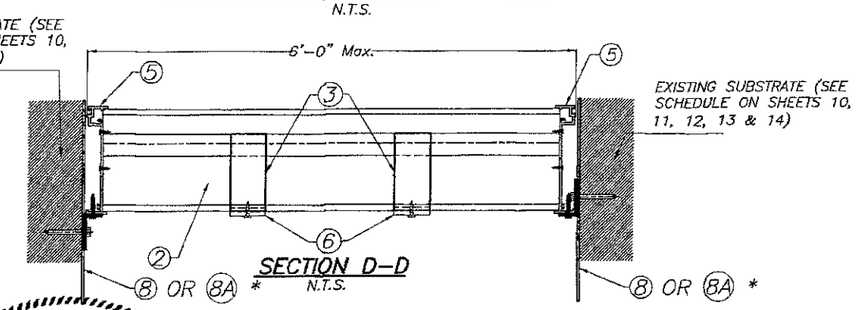

SECTION D–D
N.T.S.

* 8 OR 8A ARE OPTIONAL

PRODUCT REVISED
as complying with the Florida Building Code
NOA-No. 16-1013.11
Expiration Date 01/17/2021
By
Miami-Dade Product Control

WALTER A. TILLIT JR. LICENSE No. 44167 3/31/15 STATE OF FLORIDA PROFESSIONAL ENGINEER

P.E. SEAL/SIGNATURE/DATE

FLORIDA BUILDING CODE (HIGH VELOCITY HURRICANE ZONE)

©2015 TILTECO, INC

TILTECO INC.
TILLIT TESTING & ENGINEERING COMPANY
6355 N.W. 36th. St., Ste. 305, VIRGINIA GARDENS, Fl. 33166
Phone : (305)871-1530. Fax : (305)871-1531
e-mail: tilteco@aol.com
EB-0006719
WALTER A. TILLIT Jr. P.E.
FLORIDA Lic. # 44167

ALUMINUM LOUVER SYSTEM
MODEL FL-D-6

UNITED ENERTECH, CORP.

3005 S. HICKORY STREET,
CHATTANOOGA, TN, 37407
PHONE: (423)698-7715 FAX: (423)698-6629

REV. No	DESCRIPTION	DATE	REV. No	DESCRIPTION	DATE
1	OLD 14-098	03/16/15	3	–	–
2			4	–	–

DRAWN BY F.R.L.
03/16/15 DATE
15-025 DRAWING No
SHEET 3 OF 15

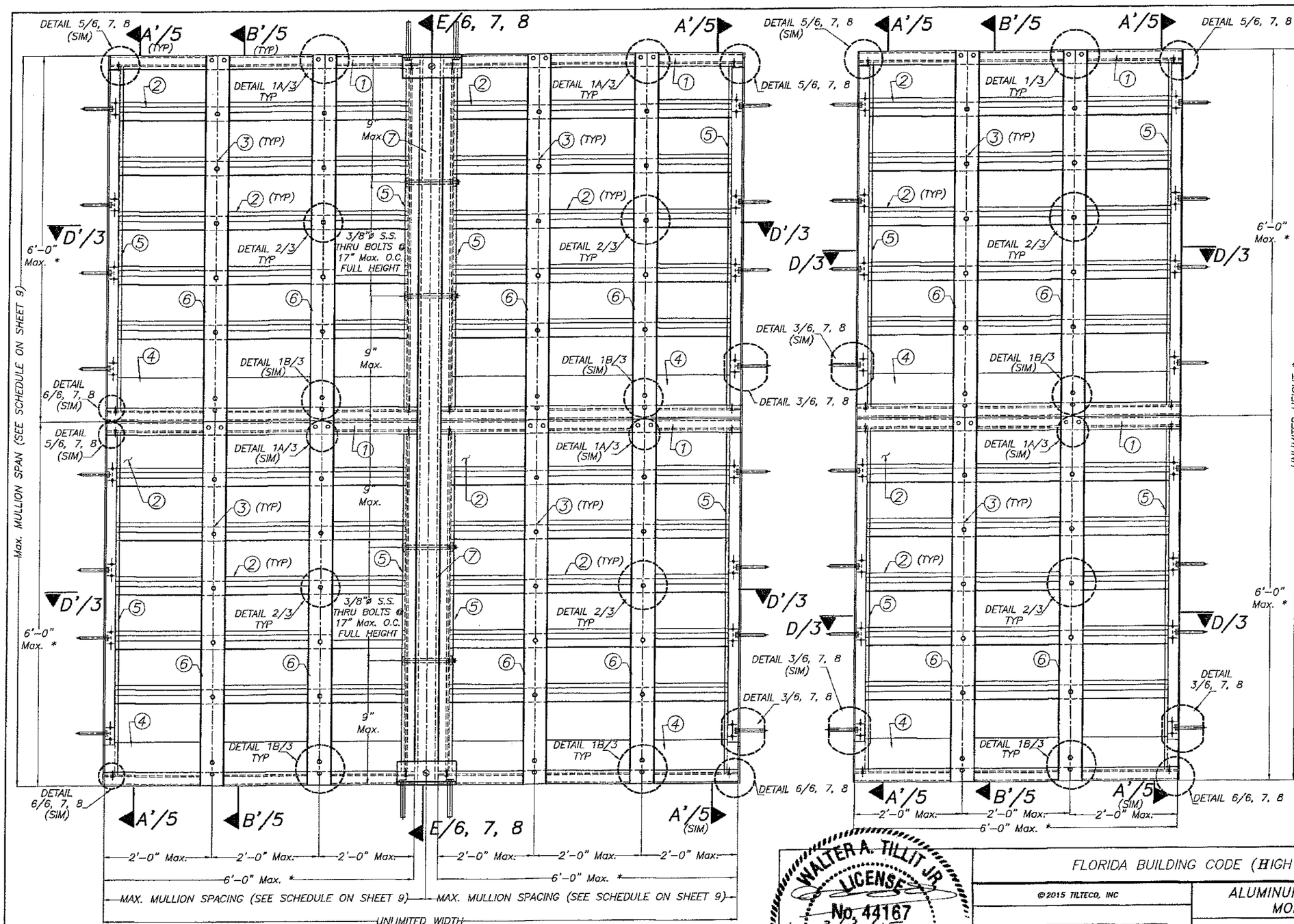

MULTIPLE UNITS HORIZONTALLY & VERTICALLY EXPANDED (INTERIOR ELEVATION)
N.T.S.

* NUMBER OF LOUVER PANEL UNITS NEEDED TO ACHIEVE THE OPENING HEIGHT AND WIDTH MAY VARY HOWEVER MAXIMUM UNIT HEIGHT AND WIDTH SHALL NO EXCEED 6'-0".

PRODUCT REVISED
as complying with the Florida Building Code
NOA-No. 16-1013.11
Expiration Date 01/17/2021
By
Miami-Dade Product Control

SINGLE UNIT (INTERIOR ELEVATION)
N.T.S.

WALTER A. TILLIT JR. LICENSE No. 44167 STATE OF FLORIDA PROFESSIONAL ENGINEER
P.E. SEAL/SIGNATURE/DATE

FLORIDA BUILDING CODE (HIGH VELOCITY HURRICANE ZONE)

©2015 TILTECO, INC

TILTECO INC.
TILLIT TESTING & ENGINEERING COMPANY
6355 N.W. 36th. St., Ste. 305, VIRGINIA GARDENS, Fl. 33166
Phone : (305)871-1530, Fax : (305)871-1531
e-mail: tilteco@aol.com
EB-0006719
WALTER A. TILLIT Jr. P.E.
FLORIDA Lic. # 44167

ALUMINUM LOUVER SYSTEM
MODEL FL-D-6

UNITED ENERTECH, CORP.

3005 S. HICKORY STREET,
CHATTANOOGA, TN, 37407
PHONE: (423)698-7715 FAX: (423)698-6629

REV. No	DESCRIPTION	DATE	REV. No	DESCRIPTION	DATE
1	OLD 14-098	03/16/15	3	–	–
2			4	–	–

DRAWN BY F.R.L.
03/16/15 DATE
15-025 DRAWING No
SHEET 4 OF 15

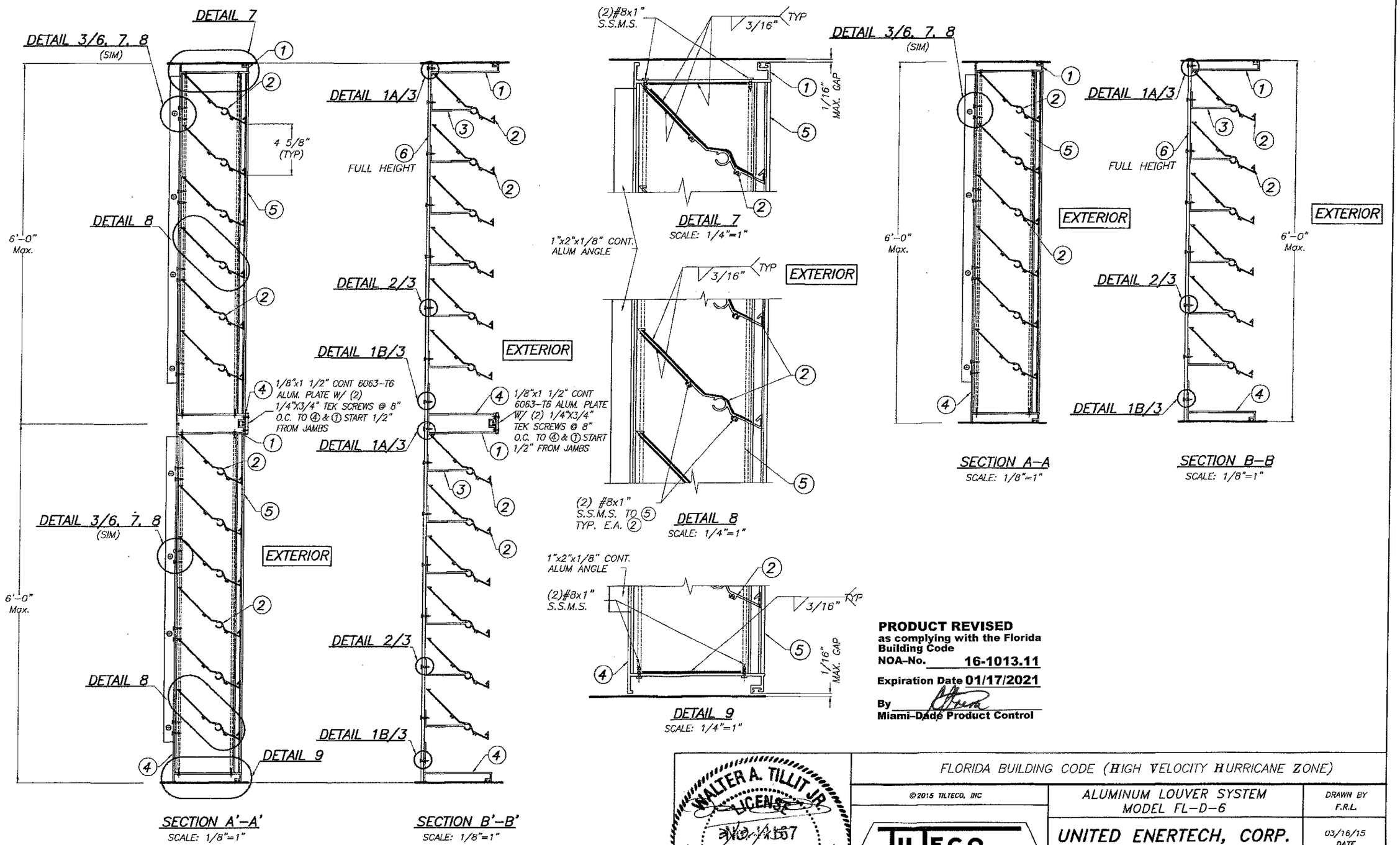

PRODUCT REVISED
as complying with the Florida Building Code
NOA-No. 16-1013.11
Expiration Date 01/17/2021
By
Miami-Dade Product Control

WALTER A. TILLIT JR.
LICENSE
No. 44167
STATE OF FLORIDA
PROFESSIONAL ENGINEER

FLORIDA BUILDING CODE (HIGH VELOCITY HURRICANE ZONE)

©2015 TILTECO, INC

TILTECO INC.
TILLIT TESTING & ENGINEERING COMPANY
6355 N.W. 36th. St., Ste. 305, VIRGINIA GARDENS, FL 33166
Phone : (305)871-1530. Fax : (305)871-1531
e-mail: tilteco@aol.com
EB-0006719
WALTER A. TILLIT Jr. P.E.
FLORIDA Lic. # 44167

ALUMINUM LOUVER SYSTEM
MODEL FL-D-6

UNITED ENERTECH, CORP.
3005 S. HICKORY STREET,
CHATTANOOGA, TN, 37407
PHONE: (423)698-7715 FAX: (423)698-6629

REV. No	DESCRIPTION	DATE	REV. No	DESCRIPTION	DATE
1	OLD 14-098	03/18/15	3	–	–
2			4	–	–

DRAWN BY
F.R.L.

03/16/15
DATE

15-025
DRAWING No

SHEET 5 OF 15

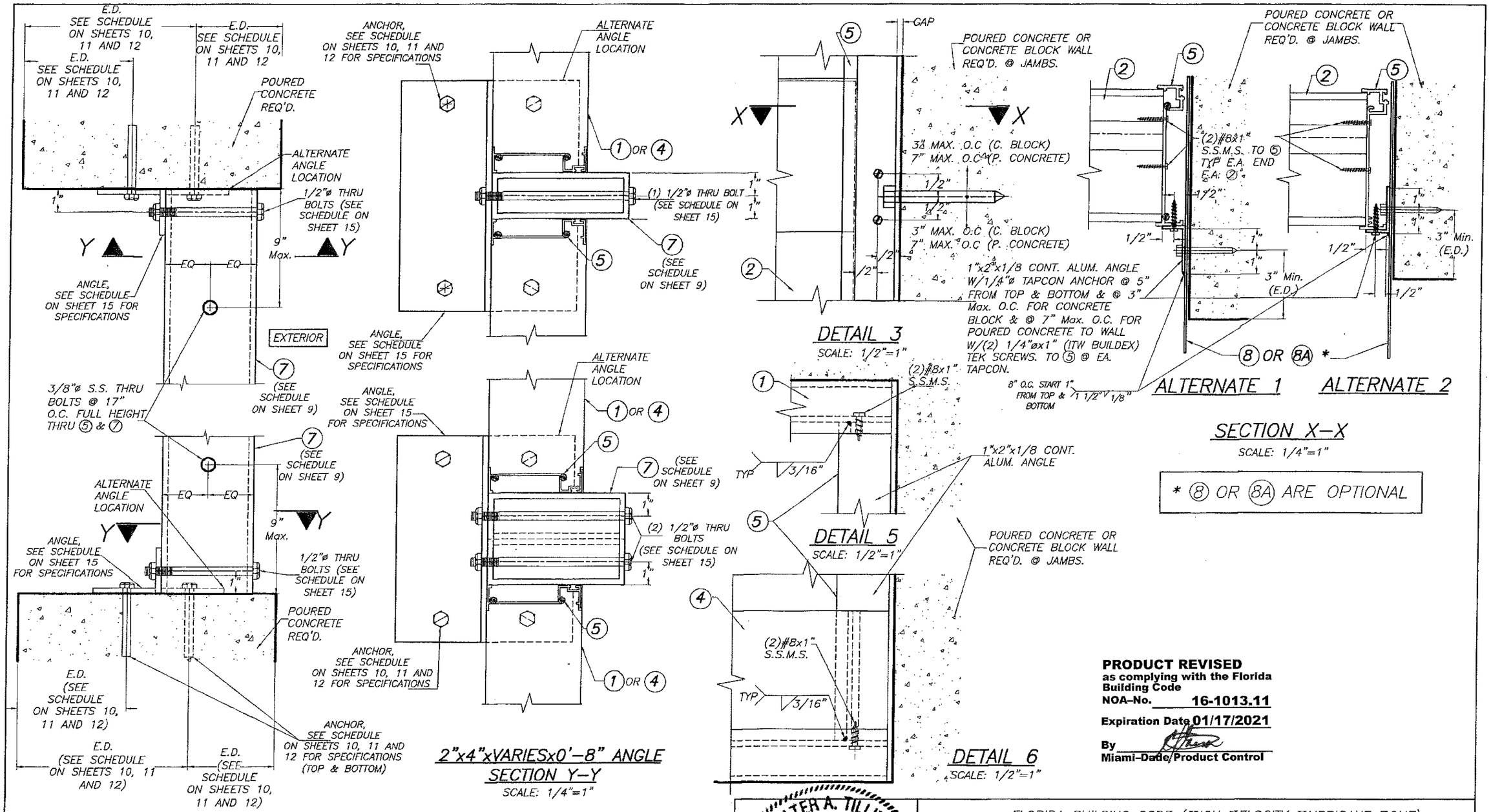

SECTION E–E
SCALE: 1/4"=1"

SECTION Y–Y
SCALE: 1/4"=1"

DETAIL 3
SCALE: 1/2"=1"

DETAIL 5
SCALE: 1/2"=1"

ALTERNATE 1 ALTERNATE 2

SECTION X–X
SCALE: 1/4"=1"

DETAIL 6
SCALE: 1/2"=1"

PRODUCT REVISED
as complying with the Florida Building Code
NOA–No. 16-1013.11
Expiration Date 01/17/2021
By
Miami–Dade Product Control

MULLION AND JAMB INSTALLATION INTO POURED CONCRETE OR CONCRETE BLOCK.

WALTER A. TILLIT JR. LICENSE No. 44167 STATE OF FLORIDA PROFESSIONAL ENGINEER
3/31/15

FLORIDA BUILDING CODE (HIGH VELOCITY HURRICANE ZONE)

©2015 TILTECO, INC

TILTECO INC.
TILLIT TESTING & ENGINEERING COMPANY
6355 N.W. 36th. St., Ste. 305, VIRGINIA GARDENS, FL 33166
Phone : (305)871–1530. Fax : (305)871–1531
e-mail: tilteco@aol.com
EB–0006719
WALTER A. TILLIT Jr. P.E.
FLORIDA Lic. # 44167

ALUMINUM LOUVER SYSTEM
MODEL FL–D–6

UNITED ENERTECH, CORP.
3005 S. HICKORY STREET,
CHATTANOOGA, TN, 37407
PHONE: (423)698–7715 FAX: (423)698–6629

REV. No	DESCRIPTION	DATE	REV. No	DESCRIPTION	DATE
1	OLD 14–098	03/16/15	3	–	–
2			4	–	–

DRAWN BY F.R.L.
03/16/15 DATE
15–025 DRAWING No
SHEET 6 OF 15

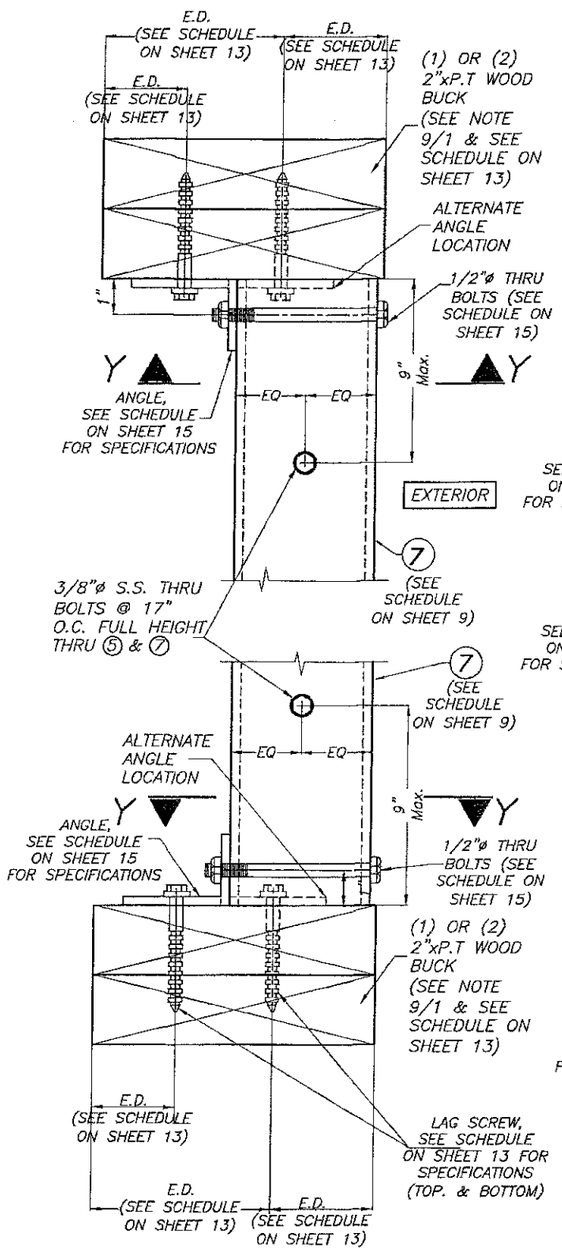

SECTION E–E
SCALE: 1/4"=1"

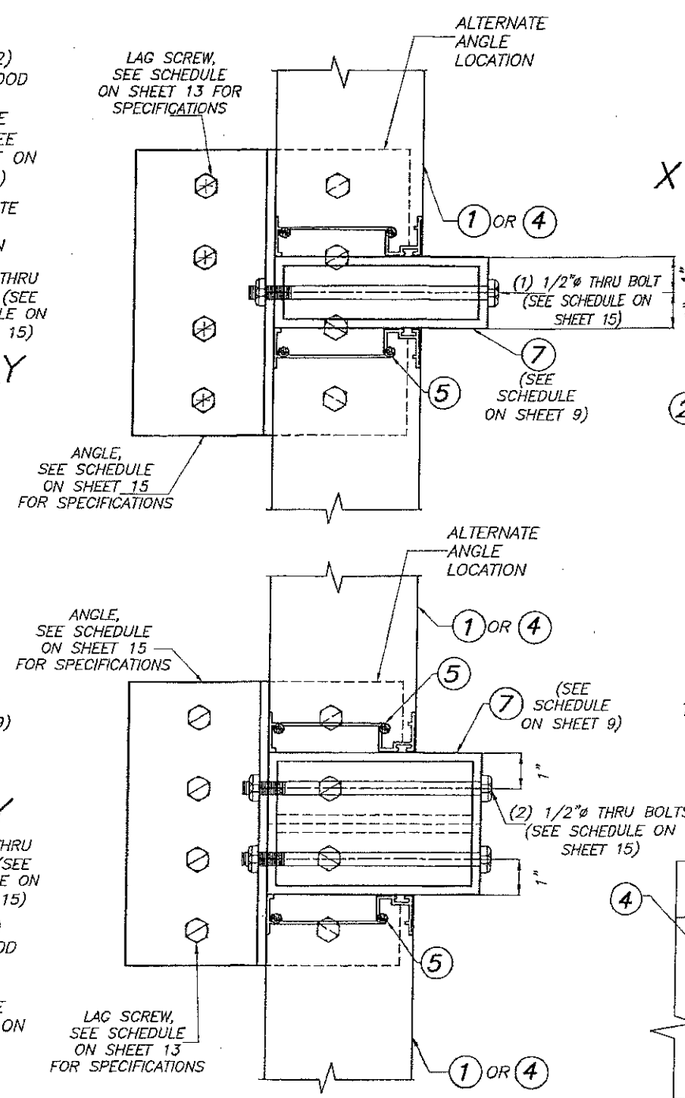

2"x4"xVARIESx0'–8" ANGLE
SECTION Y–Y
SCALE: 1/4"=1"

MULLION AND JAMB INSTALLATION INTO WOOD

* 8 OR 8A ARE OPTIONAL

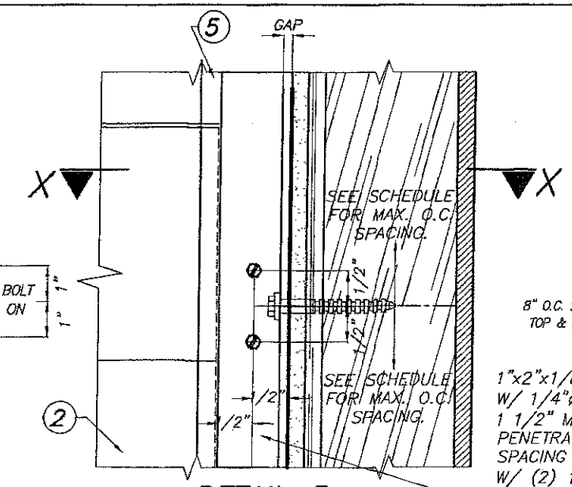

DETAIL 3
SCALE: 1/2"=1"

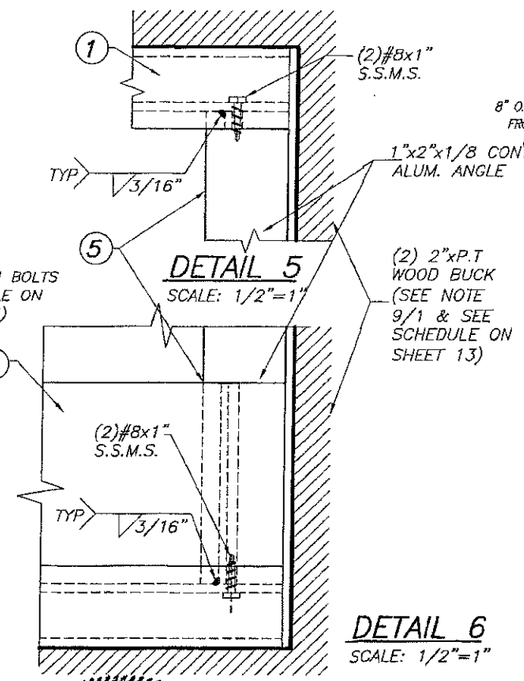

DETAIL 5
SCALE: 1/2"=1"

DETAIL 6
SCALE: 1/2"=1"

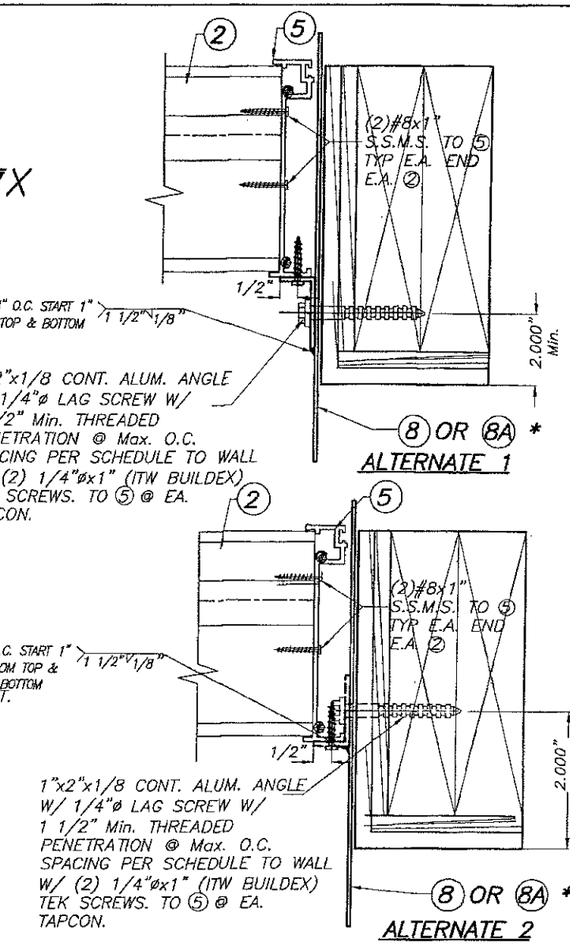

ALTERNATE 1

ALTERNATE 2

SECTION X–X
SCALE: 1/4"=1"

MAXIMUM LAG SCREW SPACING AT JAMBS

A.S.D. DESIGN PRESSURE RATING (psf)	MAX.O.C. SPACING
UP TO 50	8"
>50 TO 70	7"
>70 TO 90	5 1/2"
>90 TO 110	4 1/2"
>110 TO 130	3 1/2"
>130 TO 150	3"

PRODUCT REVISED
as complying with the Florida Building Code
NOA-No. 16-1013.11
Expiration Date 01/17/2021
By
Miami-Dade Product Control

WALTER A. TILLIT JR. LICENSE No. 44167 STATE OF FLORIDA PROFESSIONAL ENGINEER

FLORIDA BUILDING CODE (HIGH VELOCITY HURRICANE ZONE)

©2015 TILTECO, INC

TILTECO INC.
TILLIT TESTING & ENGINEERING COMPANY
8355 N.W. 36th. St., Ste. 305, VIRGINIA GARDENS, FL 33166
Phone : (305)871-1530, Fax : (305)871-1531
e-mail: tilteco@aol.com
EB-0006719
WALTER A. TILLIT Jr. P.E.
FLORIDA Lic. # 44167

ALUMINUM LOUVER SYSTEM
MODEL FL-D-6

UNITED ENERTECH, CORP.
3005 S. HICKORY STREET,
CHATTANOOGA, TN, 37407
PHONE: (423)698-7715 FAX: (423)698-6629

REV. No	DESCRIPTION	DATE	REV. No	DESCRIPTION	DATE
1	OLD 14-098	03/16/15	3	–	–
2			4	–	–

DRAWN BY F.R.L.
03/16/15 DATE
15-025 DRAWING No
SHEET 7 OF 15

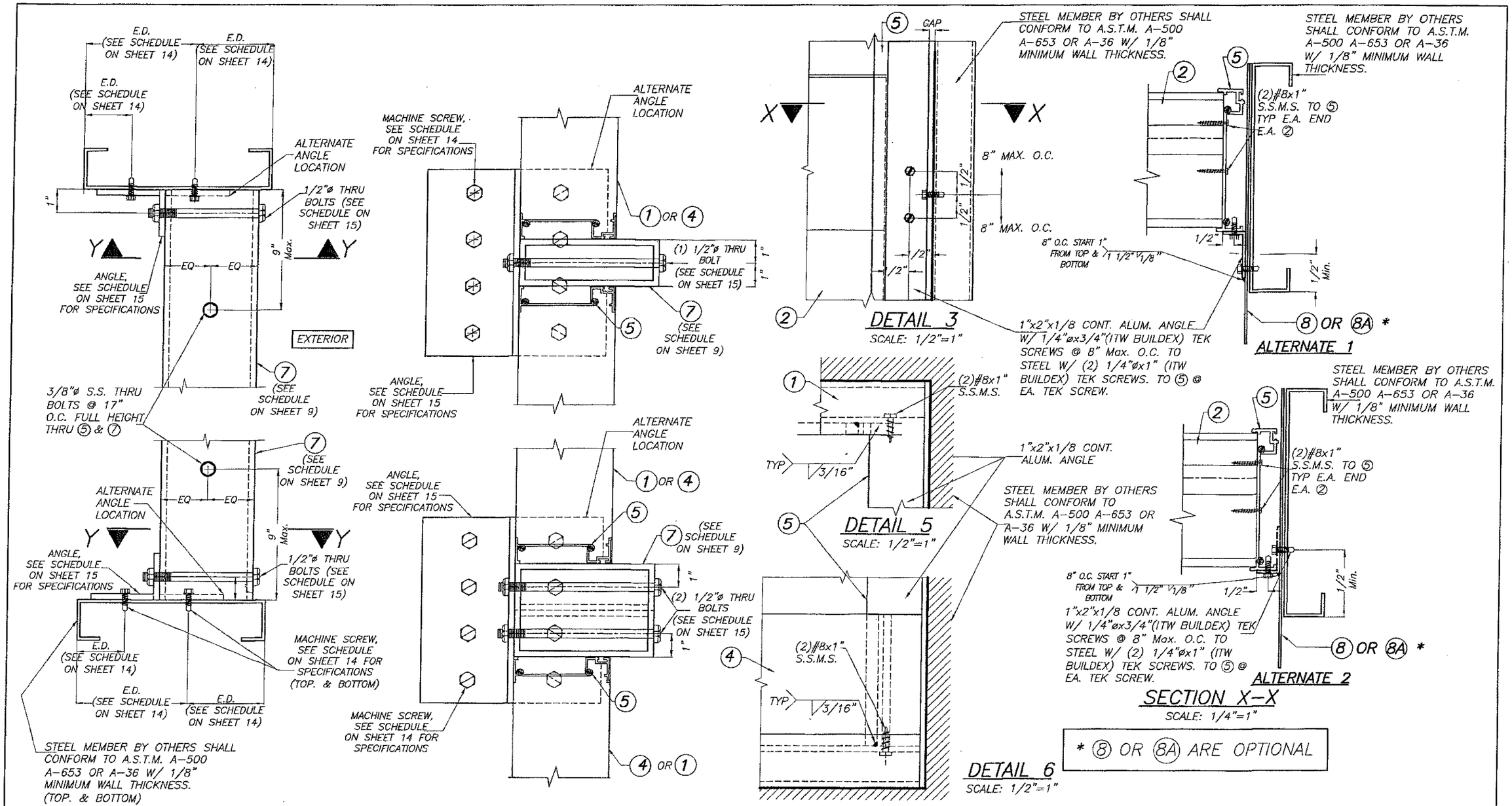

MULLION AND JAMB INSTALLATION INTO 1/8" THICK MIN. STEEL

PRODUCT REVISED
as complying with the Florida Building Code
NOA-No. 16-1013.11
Expiration Date 01/17/2021
By
Miami-Dade Product Control

WALTER A. TILLIT JR. LICENSE No. 44167 STATE OF FLORIDA PROFESSIONAL ENGINEER

FLORIDA BUILDING CODE (HIGH VELOCITY HURRICANE ZONE)

©2015 TILTECO, INC

TILTECO INC.
TILLIT TESTING & ENGINEERING COMPANY
6665 N.W. 36th. St., Ste. 305, VIRGINIA GARDENS, FL 33166
Phone : (305)871-1530. Fax : (305)871-1531
e-mail: tilteco@aol.com
EB-0006719
WALTER A. TILLIT Jr. P.E.
FLORIDA Lic. # 44167

ALUMINUM LOUVER SYSTEM
MODEL FL-D-6

UNITED ENERTECH, CORP.
3005 S. HICKORY STREET,
CHATTANOOGA, TN, 37407
PHONE: (423)698-7715 FAX: (423)698-6629

REV. No	DESCRIPTION	DATE	REV. No	DESCRIPTION	DATE
1	OLD 14-098	03/16/15	3	–	–
2			4	–	–

DRAWN BY F.R.L.
03/16/15 DATE
15-025 DRAWING No
SHEET 8 OF 15

MAX. MULLION SPAN SCHEDULE FOR A GIVEN A.S.D. DESIGN PRESSURE RATING & MULLION SPACING *

A.S.D.DESIGN PRESSURE RATING (psf)	MULLIONS											
	2"x6"x1/4"				4"x6"x1/4" OR (2) 2"x6"x1/4"				4"x8"x1/4"			
	MULLION SPACING				MULLION SPACING				MULLION SPACING			
	3'	4'	5'	6'	3'	4'	5'	6'	3'	4'	5'	6'
30	10' - 0"	10' - 0"	10' - 0"	10' - 0"	12' - 0"	12' - 0"	12' - 0"	12' - 0"	12' - 0"	12' - 0"	12' - 0"	12' - 0"
40	10' - 0"	10' - 0"	10' - 0"	10' - 0"	12' - 0"	12' - 0"	12' - 0"	12' - 0"	12' - 0"	12' - 0"	12' - 0"	12' - 0"
50	10' - 0"	10' - 0"	10' - 0"	10' - 0"	12' - 0"	12' - 0"	12' - 0"	12' - 0"	12' - 0"	12' - 0"	12' - 0"	12' - 0"
60	10' - 0"	10' - 0"	10' - 0"	10' - 0"	12' - 0"	12' - 0"	12' - 0"	12' - 0"	12' - 0"	12' - 0"	12' - 0"	12' - 0"
70	10' - 0"	10' - 0"	10' - 0"	10' - 0"	12' - 0"	12' - 0"	12' - 0"	11' - 10"	12' - 0"	12' - 0"	12' - 0"	12' - 0"
80	10' - 0"	10' - 0"	10' - 0"	9' - 9"	12' - 0"	12' - 0"	12' - 0"	11' - 4"	12' - 0"	12' - 0"	12' - 0"	12' - 0"
90	10' - 0"	10' - 0"	10' - 0"	9' - 5"	12' - 0"	12' - 0"	11' - 7"	10' - 11"	12' - 0"	12' - 0"	12' - 0"	12' - 0"
100	10' - 0"	10' - 0"	9' - 8"	9' - 0"	12' - 0"	12' - 0"	11' - 2"	10' - 6"	12' - 0"	12' - 0"	12' - 0"	12' - 0"
110	10' - 0"	10' - 0"	9' - 4"	8' - 7"	12' - 0"	11' - 8"	10' - 10"	10' - 2"	12' - 0"	12' - 0"	12' - 0"	12' - 0"
120	10' - 0"	9' - 9"	9' - 0"	8' - 2"	12' - 0"	11' - 4"	10' - 6"	9' - 11"	12' - 0"	12' - 0"	12' - 0"	12' - 0"
130	10' - 0"	9' - 6"	8' - 7"	7' - 10"	12' - 0"	11' - 0"	10' - 3"	9' - 8"	12' - 0"	12' - 0"	12' - 0"	12' - 0"
140	10' - 0"	9' - 3"	8' - 4"	7' - 7"	11' - 10"	10' - 9"	10' - 0"	9' - 5"	12' - 0"	12' - 0"	12' - 0"	11' - 11"
150	10' - 0"	9' - 0"	8' - 0"	7' - 4"	11' - 7"	10' - 6"	9' - 9"	9' - 2"	12' - 0"	12' - 0"	12' - 0"	11' - 6"

* SEE ADDITIONAL LIMITATIONS FOR MAXIMUM MULLION SPAN ON SHEETS 10, 11, 12, 13, 14 & 15 FOR A MULLION CONNECTION TYPE. MAXIMUM FINAL MULLION SPAN SHALL BE THE MINIMUM VALUE BETWEEN THIS SCHEDULE AND ANY OTHER SCHEDULE GIVEN ON ABOVE MENTIONED SHEETS.

PRODUCT REVISED
as complying with the Florida Building Code
NOA-No. 16-1013.11
Expiration Date 01/17/2021
By
Miami-Dade Product Control

WALTER A. TILLIT JR. LICENSE No. 44167 STATE OF FLORIDA PROFESSIONAL ENGINEER
P.E. SEAL SIGNATURE DATE

FLORIDA BUILDING CODE (HIGH VELOCITY HURRICANE ZONE)

©2015 TILTECO, INC

TILTECO INC.
TILLIT TESTING & ENGINEERING COMPANY
6355 N.W. 36th, St., Ste. 305, VIRGINIA GARDENS, FL 33166
Phone : (305)871-1530. Fax : (305)871-1531
e-mail: tilteco@aol.com
EB-0006719
WALTER A. TILLIT Jr. P.E.
FLORIDA Lic. # 44167

ALUMINUM LOUVER SYSTEM
MODEL FL-D-6

UNITED ENERTECH, CORP.

3005 S. HICKORY STREET,
CHATTANOOGA, TN, 37407
PHONE: (423)698-7715 FAX: (423)698-6629

REV. No	DESCRIPTION	DATE	REV. No	DESCRIPTION	DATE
1	OLD 14-098	03/18/15	3	–	–
2			4	–	–

DRAWN BY F.R.L.
03/16/15 DATE
15-025 DRAWING No
SHEET 9 OF 15

MAX. MULLION SPAN (L ft) FOR A GIVEN A.S.D. DESIGN PRESSURE RATING & MULLION SPACING FOR TYPE 1 CONNECTION *

A.S.D. D.P.R. (psf)	MULLION SPACING 3	4	5	6
30	12'- 0"	12'- 0"	12'- 0"	12'- 0"
40	12'- 0"	12'- 0"	12'- 0"	12'- 0"
50	12'- 0"	12'- 0"	12'- 0"	12'- 0"
60	12'- 0"	12'- 0"	12'- 0"	12'- 0"
70	12'- 0"	12'- 0"	12'- 0"	11'- 3"
80	12'- 0"	12'- 0"	11'- 9"	9'- 10"
90	12'- 0"	12'- 0"	10'- 6"	8'- 9"
100	12'- 0"	12'- 0"	9'- 5"	7'- 10"
110	12'- 0"	12'- 0"	8'- 7"	7'- 2"
120	12'- 0"	12'- 0"	7'- 10"	6'- 7"
130	12'- 0"	12'- 0"	7'- 3"	6'- 1"
140	12'- 0"	8'- 5"	6'- 9"	5'- 7"
150	10'- 6"	7'- 10"	6'- 3"	5'- 3"

TYPE 1 CONNECTION TO POURED CONCRETE:
2 -1/2"ø KWIK BOLT TZ (HILTI, INC.) W/ 4" Min. EMBEDMENT & 8" MIN. MEMBER THICKNESS. W/ 3" MIN. E.D & 6" MIN. SPACING

MAX. MULLION SPAN (L ft) FOR A GIVEN A.S.D. DESIGN PRESSURE RATING & MULLION SPACING FOR TYPE 2 CONNECTION *

A.S.D. D.P.R. (psf)	MULLION SPACING 3	4	5	6
30	12'- 0"	12'- 0"	12'- 0"	12'- 0"
40	12'- 0"	12'- 0"	12'- 0"	12'- 0"
50	12'- 0"	12'- 0"	12'- 0"	12'- 0"
60	12'- 0"	12'- 0"	12'- 0"	12'- 0"
70	12'- 0"	12'- 0"	12'- 0"	12'- 0"
80	12'- 0"	12'- 0"	12'- 0"	11'- 3"
90	12'- 0"	12'- 0"	12'- 0"	10'- 0"
100	12'- 0"	12'- 0"	10'- 10"	9'- 0"
110	12'- 0"	12'- 0"	9'- 10"	8'- 2"
120	12'- 0"	11'- 3"	9'- 0"	7'- 6"
130	12'- 0"	10'- 5"	8'- 4"	6'- 11"
140	12'- 0"	9'- 8"	7'- 9"	6'- 5"
150	12'- 0"	9'- 0"	7'- 2"	6'- 0"

TYPE 2 CONNECTION TO POURED CONCRETE:
2 -5/8"ø KWIK BOLT TZ (HILTI, INC.) W/ 5" Min. EMBEDMENT & 8" MIN. MEMBER THICKNESS. W/ 3" MIN. E.D & 6" MIN. SPACING

MAX. MULLION SPAN (L ft) FOR A GIVEN A.S.D. DESING PRESSURE RATING & MULLION SPACING FOR TYPE 3 CONNECTION *

A.S.D. D.P.R. (psf)	MULLION SPACING 3	4	5	6
30	12'- 0"	12'- 0"	12'- 0"	12'- 0"
40	12'- 0"	12'- 0"	12'- 0"	12'- 0"
50	12'- 0"	12'- 0"	12'- 0"	12'- 0"
60	12'- 0"	12'- 0"	12'- 0"	12'- 0"
70	12'- 0"	12'- 0"	12'- 0"	12'- 0"
80	12'- 0"	12'- 0"	12'- 0"	11'- 9"
90	12'- 0"	12'- 0"	12'- 0"	10'- 5"
100	12'- 0"	12'- 0"	11'- 3"	9'- 5"
110	12'- 0"	12'- 0"	10'- 3"	8'- 6"
120	12'- 0"	11'- 9"	9'- 5"	7'- 10"
130	12'- 0"	10'- 10"	8'- 8"	7'- 3"
140	12'- 0"	10'- 1"	8'- 0"	6'- 8"
150	12'- 0"	9'- 5"	7'- 6"	6'- 3"

TYPE 3 CONNECTION TO POURED CONCRETE:
2 -3/4"ø KWIK BOLT TZ (HILTI, INC.) W/ 5" Min. EMBEDMENT & 8" MIN. MEMBER THICKNESS. W/ 3" MIN. E.D & 6" MIN. SPACING

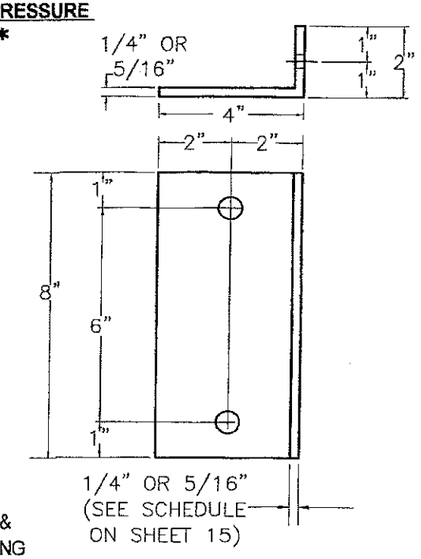

2"x4"xVARIESx0'-8" ALUMINUM ANGLE

MAX. MULLION SPAN (L ft) FOR A GIVEN A.S.D. DESIGN PRESSURE RATING & MULLION SPACING FOR TYPE 4 CONNECTION *

A.S.D. D.P.R. (psf)	MULLION SPACING 3	4	5	6
30	12'- 0"	12'- 0"	12'- 0"	12'- 0"
40	12'- 0"	12'- 0"	12'- 0"	12'- 0"
50	12'- 0"	12'- 0"	12'- 0"	12'- 0"
60	12'- 0"	12'- 0"	12'- 0"	12'- 0"
70	12'- 0"	12'- 0"	12'- 0"	12'- 0"
80	12'- 0"	12'- 0"	12'- 0"	12'- 0"
90	12'- 0"	12'- 0"	12'- 0"	11'- 0"
100	12'- 0"	12'- 0"	11'- 10"	9'- 10"
110	12'- 0"	12'- 0"	10'- 9"	9'- 0"
120	12'- 0"	12'- 0"	9'- 10"	8'- 3"
130	12'- 0"	11'- 5"	9'- 1"	7'- 7"
140	12'- 0"	10'- 7"	8'- 6"	7'- 1"
150	12'- 0"	9'- 10"	7'- 11"	6'- 7"

TYPE 4 CONNECTION TO POURED CONCRETE:
2 -M16 HSL-3 HEAVY DUTY (HILTI, INC) W/ 5" MIN. EMBEDMENT & 8" MIN. MEMBER THICKNESS. W/ 3" MIN. E.D & 6" MIN. SPACING

MAX. MULLION SPAN (L ft) FOR A GIVEN A.S.D. DESIGN PRESSURE RATING & MULLION SPACING FOR TYPE 5 CONNECTION *

A.S.D. D.P.R. (psf)	MULLION SPACING 3	4	5	6
30	12'- 0"	12'- 0"	12'- 0"	12'- 0"
40	12'- 0"	12'- 0"	12'- 0"	12'- 0"
50	12'- 0"	12'- 0"	12'- 0"	12'- 0"
60	12'- 0"	12'- 0"	12'- 0"	12'- 0"
70	12'- 0"	12'- 0"	12'- 0"	11'- 11"
80	12'- 0"	12'- 0"	12'- 0"	10'- 5"
90	12'- 0"	12'- 0"	11'- 1"	9'- 3"
100	12'- 0"	12'- 0"	10'- 0"	8'- 4"
110	12'- 0"	11'- 4"	9'- 1"	7'- 7"
120	12'- 0"	10'- 5"	8'- 4"	6'- 11"
130	12'- 0"	9'- 7"	7'- 8"	6'- 5"
140	11'- 11"	8'- 11"	7'- 2"	5'- 11"
150	11'- 1"	8'- 4"	6'- 8"	5'- 7"

TYPE 5 CONNECTION TO POURED CONCRETE:
2 -1/2"ø KWIK BOLT TZ (HILTI, INC.) W/ 4" Min. EMBEDMENT & 8" MIN. MEMBER THICKNESS. W/ 4" MIN. E.D & 6" MIN. SPACING

MAX. MULLION SPAN (L ft) FOR A GIVEN A.S.D. DESIGN PRESSURE RATING & MULLION SPACING FOR TYPE 6 CONNECTION *

A.S.D. D.P.R. (psf)	MULLION SPACING 3	4	5	6
30	12'- 0"	12'- 0"	12'- 0"	12'- 0"
40	12'- 0"	12'- 0"	12'- 0"	12'- 0"
50	12'- 0"	12'- 0"	12'- 0"	12'- 0"
60	12'- 0"	12'- 0"	12'- 0"	12'- 0"
70	12'- 0"	12'- 0"	12'- 0"	12'- 0"
80	12'- 0"	12'- 0"	12'- 0"	11'- 10"
90	12'- 0"	12'- 0"	12'- 0"	10'- 7"
100	12'- 0"	12'- 0"	11'- 5"	9'- 6"
110	12'- 0"	12'- 0"	10'- 4"	8'- 8"
120	12'- 0"	11'- 10"	9'- 6"	7'- 11"
130	12'- 0"	11'- 0"	8'- 9"	7'- 4"
140	12'- 0"	10'- 2"	8'- 2"	6'- 9"
150	12'- 0"	9'- 6"	7'- 7"	6'- 4"

TYPE 6 CONNECTION TO POURED CONCRETE:
2 -5/8"ø KWIK BOLT TZ (HILTI, INC.) W/ 5" Min. EMBEDMENT & 8" MIN. MEMBER THICKNESS. W/ 4" MIN. E.D & 6" MIN. SPACING

SCHEDULE FOR MULLION CONNECTION TO POURED CONCRETE

(Min. f'c = 3 ksi)

PRODUCT REVISED
as complying with the Florida Building Code
NOA-No. 16-1013.11
Expiration Date 01/17/2021
By
Miami-Dade Product Control

*** NOTES:**

(1) SEE SHEET 9 FOR ADDITIONAL MAXIMUM MULLION SPAN LIMITATIONS FOR A GIVEN A.S.D. DESIGN PRESSURE RATING AND MAXIMUM SPACING. MAXIMUM MULLION SPAN SHALL BE THE MINIMUM BETWEEN SCHEDULES ON SHEETS 9, 10, 11 AND 12 FOR A CONNECTION TYPE.

(2) SEE SHEET 15 FOR ANGLE SCHEDULE INDICATING MAXIMUM ALLOWABLE A.S.D. DESIGN PRESSURE RATING, MULLION SPACING AND MULLION SPAN FOR 1/4" THICK & 5/16" THICK ALUMINUM ANGLES USED TOP & BOTTOM FOR MULLION CONNECTION TO SUBSTRATE.

WALTER A. TILLIT JR. LICENSE No. 44167 STATE OF FLORIDA PROFESSIONAL ENGINEER
P.E. SEAL & DATE

FLORIDA BUILDING CODE (HIGH VELOCITY HURRICANE ZONE)

©2015 TILTECO, INC

TILTECO INC.
TILLIT TESTING & ENGINEERING COMPANY
6355 N.W. 36th. St., Ste. 305, VIRGINIA GARDENS, FL 33166
Phone : (305)871-1530. Fax : (305)871-1531
e-mail: tilteco@aol.com
EB-0006719
WALTER A. TILLIT Jr. P.E.
FLORIDA Lic. # 44167

ALUMINUM LOUVER SYSTEM
MODEL FL-D-6

UNITED ENERTECH, CORP.
3005 S. HICKORY STREET,
CHATTANOOGA, TN, 37407
PHONE: (423)698-7715 FAX: (423)698-6629

REV. No	DESCRIPTION	DATE	REV. No	DESCRIPTION	DATE
1	OLD 14-098	03/16/15	3	–	–
2			4	–	–

DRAWN BY F.R.L.
03/16/15 DATE
15-025 DRAWING No
SHEET 10 OF 15

MAX. MULLION SPAN (L ft) FOR A GIVEN A.S.D. DESIGN PRESSURE RATING & MULLION SPACING FOR TYPE 7 CONNECTION *

A.S.D. D.P.R. (psf)	MULLION SPACING 3	4	5	6
30	12'- 0"	12'- 0"	12'- 0"	12'- 0"
40	12'- 0"	12'- 0"	12'- 0"	12'- 0"
50	12'- 0"	12'- 0"	12'- 0"	12'- 0"
60	12'- 0"	12'- 0"	12'- 0"	12'- 0"
70	12'- 0"	12'- 0"	12'- 0"	12'- 0"
80	12'- 0"	12'- 0"	12'- 0"	12'- 0"
90	12'- 0"	12'- 0"	12'- 0"	11'- 0"
100	12'- 0"	12'- 0"	11'- 10"	9'- 10"
110	12'- 0"	12'- 0"	10'- 9"	9'- 0"
120	12'- 0"	12'- 0"	9'- 10"	8'- 3"
130	12'- 0"	11'- 5"	9'- 1"	7'- 7"
140	12'- 0"	10'- 7"	8'- 6"	7'- 1"
150	12'- 0"	9'- 10"	7'- 11"	6'- 7"

TYPE 7 CONNECTION TO POURED CONCRETE:
2 -3/4"ø KWIK BOLT TZ (HILTI, INC.) W/ 5" Min. EMBEDMENT & 8" MIN. MEMBER THICKNESS. W/ 4" MIN. E.D & 6" MIN. SPACING

MAX. MULLION SPAN (L ft) FOR A GIVEN A.S.D. DESIGN PRESSURE RATING & MULLION SPACING FOR TYPE 8 CONNECTION *

A.S.D. D.P.R. (psf)	MULLION SPACING 3	4	5	6
30	12'- 0"	12'- 0"	12'- 0"	12'- 0"
40	12'- 0"	12'- 0"	12'- 0"	12'- 0"
50	12'- 0"	12'- 0"	12'- 0"	12'- 0"
60	12'- 0"	12'- 0"	12'- 0"	12'- 0"
70	12'- 0"	12'- 0"	12'- 0"	12'- 0"
80	12'- 0"	12'- 0"	12'- 0"	12'- 0"
90	12'- 0"	12'- 0"	12'- 0"	11'- 6"
100	12'- 0"	12'- 0"	12'- 0"	10'- 4"
110	12'- 0"	12'- 0"	11'- 4"	9'- 5"
120	12'- 0"	12'- 0"	10'- 4"	8'- 8"
130	12'- 0"	12'- 0"	9'- 7"	8'- 0"
140	12'- 0"	11'- 1"	8'- 11"	7'- 5"
150	12'- 0"	10'- 4"	8'- 4"	6'- 11"

TYPE 8 CONNECTION TO POURED CONCRETE:
2 -M16 HSL-3 HEAVY DUTY (HILTI, INC) W/ 5" MIN. EMBEDMENT & 8" MIN. MEMBER THICKNESS. W/ 4" MIN. E.D & 6" MIN. SPACING

MAX. MULLION SPAN (L ft) FOR A GIVEN A.S.D. DESIGN PRESSURE RATING & MULLION SPACING FOR TYPE 9 CONNECTION *

A.S.D. D.P.R. (psf)	MULLION SPACING 3	4	5	6
30	12'- 0"	12'- 0"	12'- 0"	12'- 0"
40	12'- 0"	12'- 0"	12'- 0"	12'- 0"
50	12'- 0"	12'- 0"	12'- 0"	12'- 0"
60	12'- 0"	12'- 0"	12'- 0"	12'- 0"
70	12'- 0"	12'- 0"	12'- 0"	12'- 0"
80	12'- 0"	12'- 0"	12'- 0"	11'- 3"
90	12'- 0"	12'- 0"	12'- 0"	10'- 0"
100	12'- 0"	12'- 0"	10'- 10"	9'- 0"
110	12'- 0"	12'- 0"	9'- 10"	8'- 2"
120	12'- 0"	11'- 3"	9'- 0"	7'- 6"
130	12'- 0"	10'- 5"	8'- 4"	6'- 11"
140	12'- 0"	9'- 8"	7'- 9"	6'- 5"
150	12'- 0"	9'- 0"	7'- 2"	6'- 0"

TYPE 9 CONNECTION TO POURED CONCRETE:
2 -1/2"ø KWIK BOLT TZ (HILTI, INC.) W/ 4" Min. EMBEDMENT & 8" MIN. MEMBER THICKNESS. W/ 6" MIN. E.D & 6" MIN. SPACING

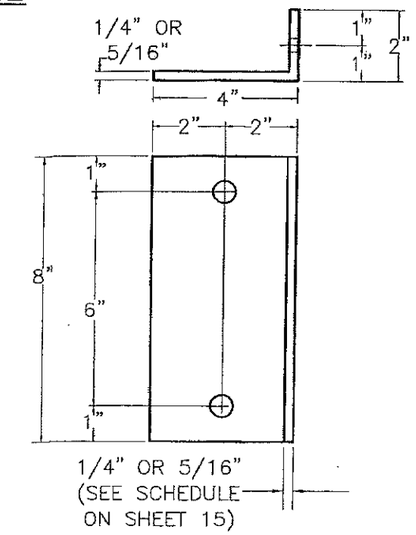

2"x4"xVARIESx0'-8" ALUMINUM ANGLE

MAX. MULLION SPAN (L ft) FOR A GIVEN A.S.D. DESIGN PRESSURE RATING & MULLION SPACING FOR TYPE 10 CONNECTION *

A.S.D. D.P.R. (psf)	MULLION SPACING 3	4	5	6
30	12'- 0"	12'- 0"	12'- 0"	12'- 0"
40	12'- 0"	12'- 0"	12'- 0"	12'- 0"
50	12'- 0"	12'- 0"	12'- 0"	12'- 0"
60	12'- 0"	12'- 0"	12'- 0"	12'- 0"
70	12'- 0"	12'- 0"	12'- 0"	12'- 0"
80	12'- 0"	12'- 0"	12'- 0"	12'- 0"
90	12'- 0"	12'- 0"	12'- 0"	12'- 0"
100	12'- 0"	12'- 0"	12'- 0"	11'- 0"
110	12'- 0"	12'- 0"	12'- 0"	10'- 0"
120	12'- 0"	12'- 0"	11'- 0"	9'- 2"
130	12'- 0"	12'- 0"	10'- 2"	8'- 6"
140	12'- 0"	11'- 9"	9'- 5"	7'- 10"
150	12'- 0"	11'- 0"	8'- 10"	7'- 4"

TYPE 10 CONNECTION TO POURED CONCRETE:
2 -5/8"ø KWIK BOLT TZ (HILTI, INC.) W/ 5" Min. EMBEDMENT & 8" MIN. MEMBER THICKNESS. W/ 6.75" MIN. E.D & 6" MIN. SPACING

MAX. MULLION SPAN (L ft) FOR A GIVEN A.S.D. DESIGN PRESSURE RATING & MULLION SPACING FOR TYPE 11 CONNECTION *

A.S.D. D.P.R. (psf)	MULLION SPACING 3	4	5	6
30	12'- 0"	12'- 0"	12'- 0"	12'- 0"
40	12'- 0"	12'- 0"	12'- 0"	12'- 0"
50	12'- 0"	12'- 0"	12'- 0"	12'- 0"
60	12'- 0"	12'- 0"	12'- 0"	12'- 0"
70	12'- 0"	12'- 0"	12'- 0"	12'- 0"
80	12'- 0"	12'- 0"	12'- 0"	12'- 0"
90	12'- 0"	12'- 0"	12'- 0"	12'- 0"
100	12'- 0"	12'- 0"	12'- 0"	12'- 0"
110	12'- 0"	12'- 0"	12'- 0"	12'- 0"
120	12'- 0"	12'- 0"	12'- 0"	11'- 3"
130	12'- 0"	12'- 0"	12'- 0"	10'- 5"
140	12'- 0"	12'- 0"	11'- 7"	9'- 8"
150	12'- 0"	12'- 0"	10'- 10"	9'- 0"

TYPE 11 CONNECTION TO POURED CONCRETE:
2 -M16 HSL-3 HEAVY DUTY (HILTI, INC) W/ 5" MIN. EMBEDMENT & 8" MIN. MEMBER THICKNESS. W/ 10" MIN. E.D & 6" MIN. SPACING

SCHEDULE FOR MULLION CONNECTION TO POURED CONCRETE

(Min. f'c=3 ksi)

PRODUCT REVISED
as complying with the Florida Building Code
NOA-No. 16-1013.11
Expiration Date 01/17/2021
By
Miami-Dade Product Control

*** NOTES:**

(1) SEE SHEET 9 FOR ADDITIONAL MAXIMUM MULLION SPAN LIMITATIONS FOR A GIVEN A.S.D. DESIGN PRESSURE RATING AND MAXIMUM SPACING. MAXIMUM MULLION SPAN SHALL BE THE MINIMUM BETWEEN SCHEDULES ON SHEETS 9, 10, 11 AND 12 FOR A CONNECTION TYPE.

(2) SEE SHEET 15 FOR ANGLE SCHEDULE INDICATING MAXIMUM ALLOWABLE A.S.D. DESIGN PRESSURE RATING, MULLION SPACING AND MULLION SPAN FOR 1/4" THICK & 5/16" THICK ALUMINUM ANGLES USED TOP & BOTTOM FOR MULLION CONNECTION TO SUBSTRATE.

WALTER A. TILLIT JR. LICENSE No. 44167 STATE OF FLORIDA PROFESSIONAL ENGINEER
P.E. SIGNATURE/DATE

FLORIDA BUILDING CODE (HIGH VELOCITY HURRICANE ZONE)

©2015 TILTECO, INC

TILTECO INC.
TILLIT TESTING & ENGINEERING COMPANY
6355 N.W. 36th. St, Ste. 305, VIRGINIA GARDENS, FL 33166
Phone : (305)871-1530. Fax : (305)871-1531
e-mail: tilteco@aol.com
EB-0006719
WALTER A. TILLIT Jr. P.E.
FLORIDA Lic. # 44167

ALUMINUM LOUVER SYSTEM
MODEL FL-D-6

UNITED ENERTECH, CORP.
3005 S. HICKORY STREET,
CHATTANOOGA, TN, 37407
PHONE: (423)698-7715 FAX: (423)698-6629

REV. No	DESCRIPTION	DATE	REV. No	DESCRIPTION	DATE
1	OLD 14-098	03/18/15	3	–	–
2			4	–	–

DRAWN BY F.R.L.
03/16/15 DATE
15-025 DRAWING No
SHEET 11 OF 15

MAX. MULLION SPAN (L ft) FOR A GIVEN A.S.D. DESIGN PRESSURE RATING (psf) & MULLION SPACING FOR TYPE 12 CONNECTION *

A.S.D. DESIGN PRESSURE RATING	MULLION SPACING			
	3	4	5	6
30	12'- 0"	11'- 3"	9'- 0"	7'- 6"
40	12'- 0"	8'- 5"	6'- 9"	5'- 8"
50	11'- 3"	6'- 9"	5'- 5"	4'- 6"
60	9'- 0"	5'- 8"	4'- 6"	3'- 9"
70	7'- 6"	4'- 10"	3'- 10"	3'- 3"
80	6'- 5"	4'- 3"	3'- 5"	2'- 10"
90	5'- 8"	3'- 9"	3'- 0"	2'- 6"
100	5'- 0"	3'- 5"	2'- 8"	2'- 3"
110	4'- 6"	3'- 1"	2'- 6"	2'- 1"
120	4'- 1"	2'- 10"	2'- 3"	1'- 11"
130	3'- 9"	2'- 7"	2'- 1"	1'- 9"
140	3'- 6"	2'- 5"	1'- 11"	1'- 7"
150	3'- 0"	2'- 3"	1'- 10"	1'- 6"

TYPE 12 CONNECTION TO POURED CONCRETE:
2 -1/4"ø CRETE-FLEX SS4(ELCO CONSTRUCTION PRODUCTS) W/ 2" MIN. EMBEDMENT TO POURED CONCRETE:
8" MIN. MEMBER THICKNESS. W/ 2 1/2" MIN. E.D & 6" MIN. SPACING

MAX. MULLION SPAN (L ft) FOR A GIVEN A.S.D. DESIGN PRESSURE RATING (psf) & MULLION SPACING FOR TYPE 13 CONNECTION *

A.S.D. DESIGN PRESSURE RATING	MULLION SPACING			
	3	4	5	6
30	12'- 0"	11'- 7"	9'- 3"	7'- 8"
40	11'- 7"	8'- 8"	6'- 11"	5'- 9"
50	9'- 3"	6'- 11"	5'- 7"	4'- 7"
60	7'- 8"	5'- 9"	4'- 7"	3'- 10"
70	6'- 7"	4'- 11"	3'- 12"	3'- 4"
80	5'- 9"	4'- 4"	3'- 6"	2'- 11"
90	5'- 2"	3'- 10"	3'- 1"	2'- 1"
100	4'- 7"	3'- 6"	2'- 9"	2'- 4"
110	4'- 2"	3'- 2"	2'- 6"	2'- 1"
120	3'- 10"	2'- 11"	2'- 4"	1'- 11"
130	3'- 7"	2'- 8"	2'- 2"	1'- 9"
140	3'- 4"	2'- 6"	1'- 12"	1'- 8"
150	3'- 1"	2'- 4"	1'- 10"	1'- 7"

TYPE 13 CONNECTION TO POURED CONCRETE:
2 -5/16"ø ULTRACON (ELCO CONSTRUCTION PRODUCTS) W/1 3/4" MIN. EMBEDMENT TO POURED CONCRETE:
8" MIN. MEMBER THICKNESS. W/2 3/16" MIN. E.D & 6" MIN. SPACING

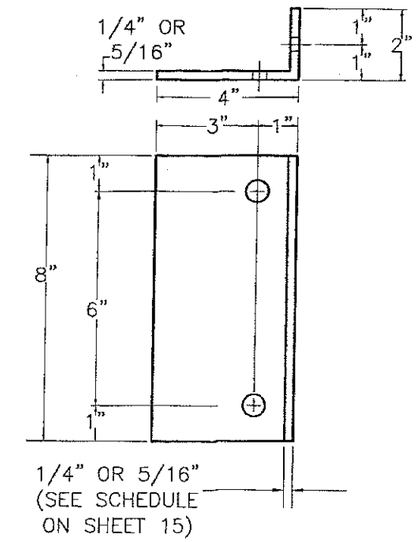

2"x4"xVARIESx0'-8"
ALUMINUM ANGLE

MAX. MULLION SPAN (L ft) FOR A GIVEN A.S.D. DESING PRESSURE RATING (psf) & MULLION SPACING FOR TYPE 14 CONNECTION *

A.S.D. DESIGN PRESSURE RATING	MULLION SPACING			
	3	4	5	6
30	12'- 0"	10'- 10"	8'- 8"	7'- 2"
40	10'- 10"	8'- 1"	6'- 6"	5'- 5"
50	8'- 8"	6'- 6"	5'- 2"	4'- 4"
60	7'- 2"	5'- 5"	4'- 4"	3'- 7"
70	6'- 2"	4'- 8"	3'- 8"	3'- 1"
80	5'- 5"	4'- 1"	3'- 3"	2'- 8"
90	4'- 10"	3'- 7"	2'- 11"	2'- 5"
100	4'- 4"	3'- 3"	2'- 7"	2'- 2"
110	3'- 11"	2'- 11"	2'- 4"	1'- 12"
120	3'- 7"	2'- 8"	2'- 2"	1'- 10"
130	3'- 4"	2'- 6"	1'- 12"	1'- 8"
140	3'- 1"	2'- 4"	1'- 10"	1'- 7"
150	2'- 11"	2'- 2"	1'- 9"	1'- 5"

TYPE 14 CONNECTION TO POURED CONCRETE:
2 -5/16"ø TAPPER PLUS (POWER FASTENERS) W/ 3" Min. EMBEDMENT TO POURED CONCRETE:
8" MIN. MEMBER THICKNESS. W/ 2 1/2" MIN. E.D & 6" MIN. SPACING

MAX. MULLION SPAN (L ft) FOR A GIVEN A.S.D. DESIGN PRESSURE RATING (psf) & MULLION SPACING FOR TYPE 15 CONNECTION *

A.S.D.DESIGN PRESSURE RATING	MULLION SPACING			
	3	4	5	6
30	12'- 0"	12'- 0"	12'- 0"	10'- 3"
40	12'- 0"	11'- 7"	9'- 3"	7'- 8"
50	12'- 0"	9'- 3"	7'- 5"	6'- 2"
60	10'- 3"	7'- 8"	6'- 2"	5'- 2"
70	8'- 10"	6'- 7"	5'- 3"	4'- 5"
80	7'- 8"	5'- 9"	4'- 7"	3'- 10"
90	6'- 10"	5'- 2"	4'- 1"	3'- 5"
100	6'- 2"	4'- 7"	3'- 8"	3'- 1"
110	5'- 7"	4'- 2"	3'- 4"	2'- 10"
120	5'- 2"	3'- 10"	3'- 1"	2'- 7"
130	4'- 9"	3'- 7"	2'- 10"	2'- 4"
140	4'- 5"	3'- 4"	2'- 8"	2'- 2"
150	4'- 1"	3'- 1"	2'- 6"	2'- 1"

TYPE 15 CONNECTION TO POURED CONCRETE:
2 -3/8"ø WEDGE BOLT(POWER FASTENERS) W/ 3" MIN. EMBEDMENT TO POURED CONCRETE:
8" MIN. MEMBER THICKNESS. W/ 2 1/2" MIN. E.D & 6" MIN. SPACING

PRODUCT REVISED
as complying with the Florida Building Code
NOA-No. 16-1013.11
Expiration Date 01/17/2021
By
Miami-Dade Product Control

SCHEDULE FOR MULLION CONNECTION TO POURED CONCRETE
(Min. f'c = 3 ksi)

*** NOTES:**

(1) SEE SHEET 9 FOR ADDITIONAL MAXIMUM MULLION SPAN LIMITATIONS FOR A GIVEN A.S.D. DESIGN PRESSURE RATING AND MAXIMUM SPACING. MAXIMUM MULLION SPAN SHALL BE THE MINIMUM BETWEEN SCHEDULES ON SHEETS 9, 10, 11 AND 12 FOR A CONNECTION TYPE.

(2) SEE SHEET 15 FOR ANGLE SCHEDULE INDICATING MAXIMUM ALLOWABLE A.S.D. DESIGN PRESSURE RATING, MULLION SPACING AND MULLION SPAN FOR 1/4" THICK & 5/16" THICK ALUMINUM ANGLES USED TOP & BOTTOM FOR MULLION CONNECTION TO SUBSTRATE.

WALTER A. TILLIT JR. LICENSE No. 44167 STATE OF FLORIDA PROFESSIONAL ENGINEER
P.E. SIGNATURE/DATE

FLORIDA BUILDING CODE (HIGH VELOCITY HURRICANE ZONE)

©2015 TILTECO, INC

TILTECO INC.
TILLIT TESTING & ENGINEERING COMPANY
6355 N.W. 36th. St., Ste. 305, VIRGINIA GARDENS, FL 33166
Phone : (305)871-1530, Fax : (305)871-1531
e-mail: tilteco@aol.com
EB-0006719
WALTER A. TILLIT Jr. P.E.
FLORIDA Lic. # 44167

ALUMINUM LOUVER SYSTEM
MODEL FL-D-6

UNITED ENERTECH, CORP.
3005 S. HICKORY STREET,
CHATTANOOGA, TN, 37407
PHONE: (423)698-7715 FAX: (423)698-6629

REV. No	DESCRIPTION	DATE	REV. No	DESCRIPTION	DATE
1	OLD 14-098	03/18/15	3	–	–
2			4	–	–

DRAWN BY F.R.L.
03/16/15 DATE
15-025 DRAWING No
SHEET 12 OF 15

MAX. MULLION SPAN (L ft) FOR A GIVEN A.S.D. DESIGN PRESSURE RATING & MULLION SPACING FOR TYPE 12 CONNECTION *

A.S.D. D.P.R (psf)	MULLION SPACING 3	4	5	6
50	6'- 6"	4'- 10"	3'- 11"	3'- 3"
60	5'- 0"	4'- 1"	3'- 3"	2'- 8"
70	4'- 0"	3'- 6"	2'- 9"	2'- 4"
80	4'- 0"	3'- 0"	2'- 5"	2'- 0"
90	3'- 0"	2'- 8"	2'- 2"	1'- 10"

TYPE 12 CONNECTION W/ 1/4" THICK ALUMINUM ANGLE TO WOOD
4 -3/8"ø LAG SCREWS W/ 1.5" Min. THREADED PENETRATION
W/ 2" E.D & 2" SPACING

MAX. MULLION SPAN (L ft) FOR A GIVEN A.S.D. DESIGN PRESSURE RATING & MULLION SPACING FOR TYPE 13 CONNECTION *

A.S.D. D.P.R. (psf)	MULLION SPACING 3	4	5	6
50	12'- 0"	9'- 11"	7'- 11"	6'- 7"
60	11'- 0"	8'- 3"	6'- 7"	5'- 6"
70	9'- 0"	7'- 1"	5'- 8"	4'- 9"
80	8'- 0"	6'- 2"	4'- 11"	4'- 2"
90	7'- 0"	5'- 6"	4'- 5"	3'- 8"
55	**12'- 0"**	**9'- 0"**	**7'- 2"**	**6'- 0"**

TYPE 13 CONNECTION W/ 1/4" THICK ALUMINUM ANGLE TO WOOD
4 -3/8"ø LAG SCREWS W/ 3" Min. THREADED PENETRATION
W/ 2" E.D & 2" SPACING

MAX. MULLION SPAN (L ft) FOR A GIVEN A.S.D. DESIGN PRESSURE RATING & MULLION SPACING FOR TYPE 14 CONNECTION *

A.S.D. D.P.R. (psf)	MULLION SPACING 3	4	5	6
50	7'- 2"	5'- 5"	4'- 4"	3'- 7"
60	6'- 0"	4'- 6"	3'- 7"	3'- 0"
70	5'- 0"	3'- 10"	3'- 1"	2'- 7"
80	4'- 0"	3'- 5"	2'- 8"	2'- 3"
90	4'- 0"	3'- 0"	2'- 5"	2'- 0"

TYPE 14 CONNECTION W/ 5/16" THICK ALUMINUM ANGLE TO WOOD
4 -3/8"ø LAG SCREWS W/ 1.5" Min. THREADED PENETRATION
W/ 2" E.D & 2" SPACING

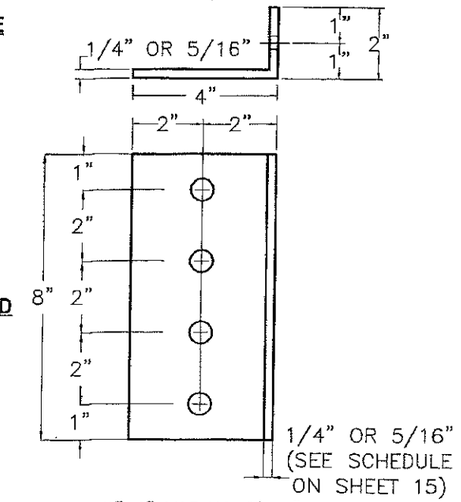

2"x4"xVARIESx0'-8"
ALUMINUM ANGLE

MAX. MULLION SPAN (L ft) FOR A GIVEN A.S.D. DESIGN PRESSURE RATING & MULLION SPACING FOR TYPE 15 CONNECTION *

A.S.D. D.P.R. (psf)	MULLION SPACING 3	4	5	6
50	12'- 0"	10'- 10"	8'- 8"	7'- 2"
60	12'- 0"	9'- 0"	7'- 2"	6'- 0"
70	10'- 0"	7'- 9"	6'- 2"	5'- 2"
80	9'- 0"	6'- 9"	5'- 5"	4'- 6"
90	8'- 0"	6'- 0"	4'- 10"	4'- 0"
60	**12'- 0"**	**9'- 0"**	**7'- 2"**	**6'- 0"**

TYPE 15 CONNECTION W/ 5/16" THICK ALUMINUM ANGLE TO WOOD
4 -3/8"ø LAG SCREWS W/ 3" Min. THREADED PENETRATION
W/ 2" E.D & 2" SPACING

MAX. MULLION SPAN (L ft) FOR A GIVEN A.S.D. DESIGN PRESSURE RATING & MULLION SPACING FOR TYPE 16 CONNECTION *

A.S.D. D.P.R. (psf)	MULLION SPACING 3	4	5	6
50	12'- 0"	9'- 4"	7'- 6"	6'- 3"
60	10'- 0"	7'- 10"	6'- 3"	5'- 2"
70	8'- 0"	6'- 8"	5'- 4"	4'- 5"
80	7'- 0"	5'- 10"	4'- 8"	3'- 11"
90	6'- 0"	5'- 2"	4'- 2"	3'- 6"
52	**12'- 0"**	**9'- 0"**	**7'- 2"**	**6'- 0"**

TYPE 16 CONNECTION W/ 1/4" THICK ALUMINUM ANGLE TO WOOD
8 -3/8"ø LAG SCREWS W/ 1.5" Min. THREADED PENETRATION
W/ 1.25" E.D & 2" SPACING

MAX. MULLION SPAN (L ft) FOR A GIVEN A.S.D. DESIGN PRESSURE RATING & MULLION SPACING FOR TYPE 17 CONNECTION *

A.S.D. D.P.R. (psf)	MULLION SPACING 3	4	5	6
50	12'- 0"	12'- 0"	12'- 0"	12'- 0"
60	12'- 0"	12'- 0"	12'- 0"	10'- 6"
70	12'- 0"	12'- 0"	10'- 10"	9'- 0"
80	12'- 0"	11'- 10"	9'- 5"	7'- 11"
90	12'- 0"	10'- 6"	8'- 5"	7'- 0"
105	**12'- 0"**	**9'- 0"**	**7'- 2"**	**6'- 0"**

TYPE 17 CONNECTION W/ 1/4" THICK ALUMINUM ANGLE TO WOOD
8 -3/8"ø LAG SCREWS W/ 3" Min. THREADED PENETRATION
W/ 1.25" E.D & 2" SPACING

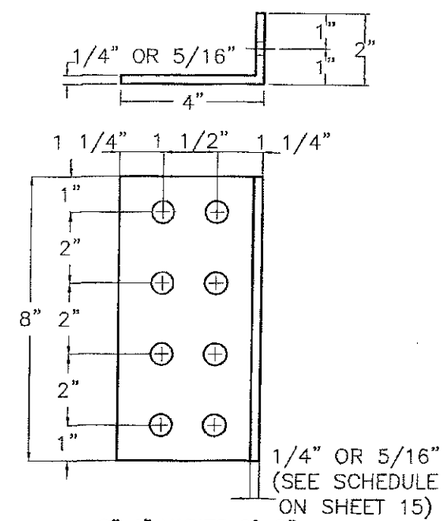

2"x4"xVARIESx0'-8"
ALUMINUM ANGLE

MAX. MULLION SPAN (L ft) FOR A GIVEN A.S.D. DESIGN PRESSURE RATING & MULLION SPACING FOR TYPE 18 CONNECTION *

A.S.D. D.P.R. (psf)	MULLION SPACING 3	4	5	6
50	12'- 0"	9'- 9"	7'- 9"	6'- 6"
60	10'- 0"	8'- 1"	6'- 6"	5'- 5"
70	9'- 0"	6'- 11"	5'- 7"	4'- 8"
80	8'- 0"	6'- 1"	4'- 10"	4'- 1"
90	7'- 0"	5'- 5"	4'- 4"	3'- 7"
54	**12'- 0"**	**9'- 0"**	**7'- 2"**	**6'- 0"**

TYPE 18 CONNECTION W/ 5/16" THICK ALUMINUM ANGLE TO WOOD
8 -3/8"ø LAG SCREWS W/ 1.5" Min. THREADED PENETRATION
W/ 1.25" E.D & 2" SPACING

MAX. MULLION SPAN (L ft) FOR A GIVEN A.S.D. DESIGN PRESSURE RATING & MULLION SPACING FOR TYPE 19 CONNECTION *

A.S.D. D.P.R. (psf)	MULLION SPACING 3	4	5	6
50	12'- 0"	12'- 0"	12'- 0"	12'- 0"
60	12'- 0"	12'- 0"	12'- 0"	12'- 0"
70	12'- 0"	12'- 0"	12'- 0"	10'- 5"
80	12'- 0"	12'- 0"	11'- 0"	9'- 2"
90	12'- 0"	12'- 0"	9'- 9"	8'- 2"
122	**12'- 0"**	**9'- 0"**	**7'- 2"**	**6'- 0"**

TYPE 19 CONNECTION W/ 5/16" THICK ALUMINUM ANGLE TO WOOD
8 -3/8"ø LAG SCREWS W/ 3" Min. THREADED PENETRATION
W/ 1.25" E.D & 2" SPACING

SCHEDULE FOR MULLION CONNECTION TO WOOD

(Min. G=0.55)

*** NOTES:**

(1) SEE SHEET 9 FOR ADDITIONAL MAXIMUM MULLION SPAN LIMITATIONS FOR A GIVEN A.S.D. DESIGN PRESSURE RATING AND MAXIMUM SPACING. MAXIMUM MULLION SPAN SHALL BE THE MINIMUM BETWEEN SCHEDULES ON SHEET 9 AND THIS SHEET FOR A CONNECTION TYPE.

(2) SEE SHEET 15 FOR ANGLE SCHEDULE INDICATING MAXIMUM ALLOWABLE A.S.D. DESIGN PRESSURE RATING, MULLION SPACING AND MULLION SPAN FOR 1/4" THICK & 5/16" THICK ALUMINUM ANGLES USED TOP & BOTTOM FOR MULLION CONNECTION TO SUBSTRATE.

PRODUCT REVISED
as complying with the Florida Building Code
NOA-No. 16-1013.11
Expiration Date 01/17/2021
By
Miami-Dade Product Control

WALTER A. TILLIT JR. LICENSE No. 44167 STATE OF FLORIDA PROFESSIONAL ENGINEER
3/16/15
P.E. SEAL/SIGNATURE/DATE

FLORIDA BUILDING CODE (HIGH VELOCITY HURRICANE ZONE)

©2015 TILTECO, INC

TILTECO INC.
TILLIT TESTING & ENGINEERING COMPANY
6355 N.W. 36th. St., Ste. 305, VIRGINIA GARDENS, FL 33166
Phone : (305)871-1530, Fax : (305)871-1531
e-mail: tilteco@aol.com
EB-0006719
WALTER A. TILLIT Jr. P.E.
FLORIDA Lic. # 44167

ALUMINUM LOUVER SYSTEM
MODEL FL-D-6

UNITED ENERTECH, CORP.
3005 S. HICKORY STREET,
CHATTANOOGA, TN, 37407
PHONE: (423)698-7715 FAX: (423)698-6629

REV. No	DESCRIPTION	DATE	REV. No	DESCRIPTION	DATE
1	OLD 14-088	03/18/15	3	–	–
2			4	–	–

DRAWN BY F.R.L.
03/16/15 DATE
15-025 DRAWING No
SHEET 13 OF 15

MAX. MULLION SPAN (L ft) FOR A GIVEN A.S.D. DESIGN PRESSURE RATING & MULLION SPACING FOR TYPE 20 CONNECTION *

A.S.D. D.P.R. (psf)	MULLION SPACING 3	4	5	6
30	12'- 0"	12'- 0"	12'- 0"	12'- 0"
40	12'- 0"	12'- 0"	12'- 0"	12'- 0"
50	12'- 0"	12'- 0"	12'- 0"	12'- 0"
60	12'- 0"	12'- 0"	12'- 0"	12'- 0"
70	12'- 0"	12'- 0"	12'- 0"	12'- 0"
80	12'- 0"	12'- 0"	12'- 0"	12'- 0"
90	12'- 0"	12'- 0"	12'- 0"	12'- 0"
100	12'- 0"	12'- 0"	12'- 0"	11'- 9"
110	12'- 0"	12'- 0"	12'- 0"	10'- 8"
120	12'- 0"	12'- 0"	11'- 9"	9'- 9"
130	12'- 0"	12'- 0"	10'- 10"	9'- 0"
140	12'- 0"	12'- 0"	10'- 1"	8'- 5"
150	12'- 0"	11'- 9"	9'- 5"	7'- 10"

TYPE 20 CONNECTION W/ 1/4" THICK ALUMINUM ANGLE* TO STEEL
4 -3/8"ø-16 MACHINE SCREWS W/ 3/4" E.D.
& W/ 1/8" MIN. MEMBER THICKNESS

MAX. MULLION SPAN (L ft) FOR A GIVEN A.S.D. DESIGN PRESSURE RATING & MULLION SPACING FOR TYPE 21 CONNECTION *

A.S.D. D.P.R. (psf)	MULLION SPACING 3	4	5	6
30	12'- 0"	12'- 0"	12'- 0"	12'- 0"
40	12'- 0"	12'- 0"	12'- 0"	12'- 0"
50	12'- 0"	12'- 0"	12'- 0"	12'- 0"
60	12'- 0"	12'- 0"	12'- 0"	12'- 0"
70	12'- 0"	12'- 0"	12'- 0"	12'- 0"
80	12'- 0"	12'- 0"	12'- 0"	12'- 0"
90	12'- 0"	12'- 0"	12'- 0"	12'- 0"
100	12'- 0"	12'- 0"	12'- 0"	11'- 9"
110	12'- 0"	12'- 0"	12'- 0"	10'- 8"
120	12'- 0"	12'- 0"	11'- 9"	9'- 9"
130	12'- 0"	12'- 0"	10'- 10"	9'- 0"
140	12'- 0"	12'- 0"	10'- 1"	8'- 5"
150	12'- 0"	11'- 9"	9'- 5"	7'- 10"

TYPE 21 CONNECTION W/ 5/16" THICK ALUMINUM ANGLE* TO STEEL
4 -3/8"ø-16 MACHINE SCREWS W/ 3/4" E.D.
& W/ 1/8" MIN. MEMBER THICKNESS

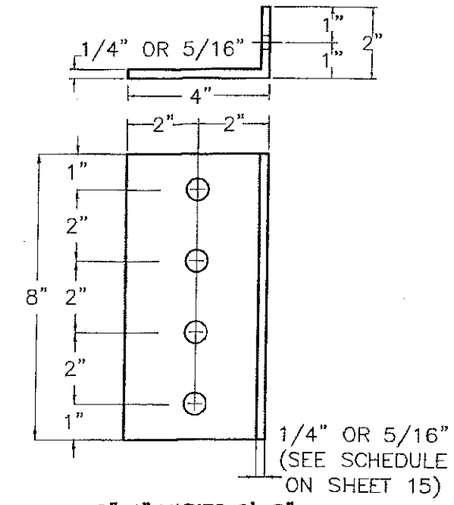

2"x4"xVARIESx0'-8"
ALUMINUM ANGLE

MAX. MULLION SPAN (L ft) FOR A GIVEN A.S.D. DESIGN PRESSURE RATING & MULLION SPACING FOR TYPE 22 CONNECTION *

A.S.D. D.P.R. (psf)	MULLION SPACING 3	4	5	6
30	12'- 0"	12'- 0"	12'- 0"	12'- 0"
40	12'- 0"	12'- 0"	12'- 0"	12'- 0"
50	12'- 0"	12'- 0"	12'- 0"	12'- 0"
60	12'- 0"	12'- 0"	12'- 0"	12'- 0"
70	12'- 0"	12'- 0"	12'- 0"	12'- 0"
80	12'- 0"	12'- 0"	12'- 0"	12'- 0"
90	12'- 0"	12'- 0"	12'- 0"	12'- 0"
100	12'- 0"	12'- 0"	12'- 0"	12'- 0"
110	12'- 0"	12'- 0"	12'- 0"	12'- 0"
120	12'- 0"	12'- 0"	12'- 0"	12'- 0"
130	12'- 0"	12'- 0"	12'- 0"	12'- 0"
140	12'- 0"	12'- 0"	12'- 0"	12'- 0"
150	12'- 0"	12'- 0"	12'- 0"	12'- 0"

TYPE 22 CONNECTION W/ 1/4" THICK ALUMINUM ANGLE* TO STEEL
8 -3/8"ø-16 MACHINE SCREWS W/ 3/4" E.D.
& W/ 1/8" MIN. MEMBER THICKNESS

MAX. MULLION SPAN (L ft) FOR A GIVEN A.S.D. DESIGN PRESSURE RATING & MULLION SPACING FOR TYPE 23 CONNECTION *

A.S.D. D.P.R. (psf)	MULLION SPACING 3	4	5	6
30	12'- 0"	12'- 0"	12'- 0"	12'- 0"
40	12'- 0"	12'- 0"	12'- 0"	12'- 0"
50	12'- 0"	12'- 0"	12'- 0"	12'- 0"
60	12'- 0"	12'- 0"	12'- 0"	12'- 0"
70	12'- 0"	12'- 0"	12'- 0"	12'- 0"
80	12'- 0"	12'- 0"	12'- 0"	12'- 0"
90	12'- 0"	12'- 0"	12'- 0"	12'- 0"
100	12'- 0"	12'- 0"	12'- 0"	12'- 0"
110	12'- 0"	12'- 0"	12'- 0"	12'- 0"
120	12'- 0"	12'- 0"	12'- 0"	12'- 0"
130	12'- 0"	12'- 0"	12'- 0"	12'- 0"
140	12'- 0"	12'- 0"	12'- 0"	12'- 0"
150	12'- 0"	12'- 0"	12'- 0"	12'- 0"

TYPE 23 CONNECTION W/ 5/16" THICK ALUMINUM ANGLE* TO STEEL
8 -3/8"ø-16 MACHINE SCREWS W/ 3/4" E.D.
& W/ 1/8" MIN. MEMBER THICKNESS

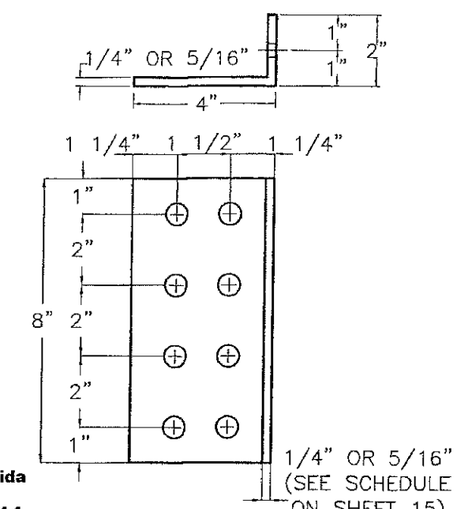

2"x4"xVARIESx0'-8"
ALUMINUM ANGLE

PRODUCT REVISED
as complying with the Florida Building Code
NOA-No. 16-1013.11
Expiration Date 01/17/2021
By
Miami-Dade Product Control

SCHEDULE FOR MULLION CONNECTION TO STEEL

(Min. Fy=33 ksi)

*** NOTES:**

(1) SEE SHEET 9 FOR ADDITIONAL MAXIMUM MULLION SPAN LIMITATIONS FOR A GIVEN A.S.D. DESIGN PRESSURE RATING AND MAXIMUM SPACING. MAXIMUM MULLION SPAN SHALL BE THE MINIMUM BETWEEN SCHEDULES ON SHEET 9 AND THIS SHEET FOR A CONNECTION TYPE.

(2) SEE SHEET 15 FOR ANGLE SCHEDULE INDICATING MAXIMUM ALLOWABLE A.S.D. DESIGN PRESSURE RATING, MULLION SPACING AND MULLION SPAN FOR 1/4" THICK & 5/16" THICK ALUMINUM ANGLES USED TOP & BOTTOM FOR MULLION CONNECTION TO SUBSTRATE.

WALTER A. TILLIT JR.
LICENSE
No. 44167
3/31/15
STATE OF FLORIDA
PROFESSIONAL ENGINEER
P.E. SEAL/SIGNATURE/DATE

FLORIDA BUILDING CODE (HIGH VELOCITY HURRICANE ZONE)

©2015 TILTECO, INC

TILTECO INC.
TILLIT TESTING & ENGINEERING COMPANY
6355 N.W. 36th. St., Ste. 305, VIRGINIA GARDENS, FL 33166
Phone : (305)871-1530 Fax : (305)871-1531
e-mail: tilteco@aol.com
EB-0006719
WALTER A. TILLIT Jr. P.E.
FLORIDA Lic. # 44167

ALUMINUM LOUVER SYSTEM
MODEL FL-D-6

UNITED ENERTECH, CORP.

3005 S. HICKORY STREET,
CHATTANOOGA, TN, 37407
PHONE: (423)698-7715 FAX: (423)698-6629

REV. No	DESCRIPTION	DATE	REV. No	DESCRIPTION	DATE
1	OLD 14-098	03/16/15	3	-	-
2			4	-	-

DRAWN BY F.R.L.
03/16/15 DATE
15-025 DRAWING No
SHEET 14 OF 15

SCHEDULE FOR MAX. MULLION SPAN FOR A GIVEN A.S.D. DESIGN PRESSURE RATING & MULLION SPACING IN ORDER TO USE 1/4" THICK ALUMINUM ANGLE FOR MULLION CONNECTION TO SUBSTRATE

A.S.D. D.P.R. (psf)	MULLION SPACING (ft)			
	3	4	5	6
30	12 '- 0 "	12 '- 0 "	12 '- 0 "	12 '- 0 "
40	12 '- 0 "	12 '- 0 "	12 '- 0 "	12 '- 0 "
50	12 '- 0 "	12 '- 0 "	12 '- 0 "	12 '- 0 "
60	12 '- 0 "	12 '- 0 "	12 '- 0 "	12 '- 0 "
70	12 '- 0 "	12 '- 0 "	12 '- 0 "	12 '- 0 "
80	12 '- 0 "	12 '- 0 "	12 '- 0 "	11 '- 3 "
90	12 '- 0 "	12 '- 0 "	12 '- 0 "	10 '- 0 "
100	12 '- 0 "	12 '- 0 "	10 '- 10 "	9 '- 0 "
110	12 '- 0 "	12 '- 0 "	9 '- 10 "	8 '- 2 "
120	12 '- 0 "	11 '- 3 "	9 '- 0 "	7 '- 6 "
130	12 '- 0 "	10 '- 5 "	8 '- 4 "	6 '- 11 "
140	12 '- 0 "	9 '- 8 "	7 '- 9 "	6 '- 5 "
150	12 '- 0 "	9 '- 0 "	7 '- 2 "	6 '- 0 "

* NOTES:

(1) ANY MULLION SPACING OR MULLION SPAN LARGER THAN THE ONES INCLUDED ON THIS SCHEDULE WILL REQUIRE A 5/16" THICK ALUMINUM ANGLE INSTEAD OF 1/4" THICK ALUMINUM ANGLE

(2) SEE SHEET 9 FOR ADDITIONAL MAXIMUM MULLION SPAN LIMITATIONS FOR A GIVEN A.S.D. DESIGN PRESSURE RATING AND MAXIMUM SPACING. MAXIMUM MULLION SPAN SHALL BE THE MINIMUM BETWEEN SCHEDULES ON SHEETS 9, 10, 11, 12, 13 AND 14 FOR A CONNECTION TYPE, AND SCHEDULE ON THIS SHEET.

PRODUCT REVISED
as complying with the Florida Building Code
NOA-No. 16-1013.11
Expiration Date 01/17/2021
By
Miami-Dade Product Control

1/2"ø THRU BOLT REQUIREMENTS FOR CONNECTION OF ALUMINUM ANGLE TO MULLION FOR MULLION END CONNECTION TO SUBSTRATE.

MULLION TYPE	1/2"ø THRU BOLT REQUIRED
2"x4" & 2"x6"	(1) REQUIRED
(2) 2"x6"	(2) REQUIRED & (1) EACH TUBE
4"x6" & 4"x8"	(2) REQUIRED

WALTER A. TILLIT JR. LICENSE No. 44167 STATE OF FLORIDA PROFESSIONAL ENGINEER
SEAL/SIGNATURE/DATE

FLORIDA BUILDING CODE (HIGH VELOCITY HURRICANE ZONE)

©2015 TILTECO, INC

TILTECO INC.
TILLIT TESTING & ENGINEERING COMPANY
6355 N.W. 36th. St., Ste. 305, VIRGINIA GARDENS, FL 33166
Phone : (305)871-1530, Fax : (305)871-1531
e-mail: tilteco@aol.com
EB-0006719
WALTER A. TILLIT Jr. P.E.
FLORIDA Lic. # 44167

ALUMINUM LOUVER SYSTEM
MODEL FL-D-6

UNITED ENERTECH, CORP.
3005 S. HICKORY STREET,
CHATTANOOGA, TN, 37407
PHONE: (423)698-7715 FAX: (423)698-6629

REV. No	DESCRIPTION	DATE	REV. No	DESCRIPTION	DATE
1	OLD 14-058	03/16/15	3	–	–
2			4	–	–

DRAWN BY F.R.L.
03/16/15 DATE
15-025 DRAWING No
SHEET 15 OF 15