MIAMI-DADE COUNTY
DEPARTMENT OF REGULATORY AND ECONOMIC RESOURCES (RER)
BOARD AND CODE ADMINISTRATION DIVISION

MIAMI-DADE COUNTY
PRODUCT CONTROL SECTION
11805 SW 26 Street, Room 208
Miami, Florida 33175-2474
T (786) 315-2590 F (786) 315-2599
www.miamidade.gov/economy

NOTICE OF ACCEPTANCE (NOA)

AWP Windows and Doors, LLC
8130 NW 74th Ave
Medley, FL 33166

SCOPE:

This NOA is being issued under the applicable rules and regulations governing the use of construction materials. The documentation submitted has been reviewed and accepted by Miami-Dade County RER -Product Control Section to be used in Miami Dade County and other areas where allowed by the Authority Having Jurisdiction (AHJ).

This NOA shall not be valid after the expiration date stated below. The Miami-Dade County Product Control Section (In Miami Dade County) and/or the AHJ (in areas other than Miami Dade County) reserve the right to have this product or material tested for quality assurance purposes. If this product or material fails to perform in the accepted manner, the manufacturer will incur the expense of such testing and the AHJ may immediately revoke, modify, or suspend the use of such product or material within their jurisdiction. RER reserves the right to revoke this acceptance, if it is determined by Miami-Dade County Product Control Section that this product or material fails to meet the requirements of the applicable building code.

This product is approved as described herein, and has been designed to comply with the Florida Building Code, including the High Velocity Hurricane Zone.

DESCRIPTION: Series "1800"Aluminum Outswing French Doors w/ wo Sidelites-LMI

APPROVAL DOCUMENT: Drawing No. **W01-64** Rev **K**, titled "Series" 1800" Alum Outswing Doo w/ sidelite (LMI)", sheets 1 through 15 of 15 (inclusive sheets 1.1, 2.1, 4.1 and 10.1), dated MAY 06, 2016, prepared by AL-Farooq Corporation, signed and sealed by Javad Ahmad, P.E., bearing the Miami-Dade County Product Control Renewal stamp with the Notice of Acceptance number and expiration date by the Miami-Dade County Product Control Section.

MISSILE IMPACT RATING: Large and Small Missile Impact Resistant

Limitations:

1. Applicable Egress door sizes per table sheets **4** & **4.1** must comply with min clear door height=80" and clear door width=32". The Door Height=frame height-2.5" and Door width=frame width-3.5"or 2.5"(S) or -3.75 or 2"(D).
2. Applicable anchor at sill is ¼" Ultracon w/ 1-3/4" into concrete.
3. SHW is integral part of **single** door application, door not to exceed 39-1/2W X 84"H and Max DP=+/-65 PSF

LABELING: Each unit shall bear a permanent label with the manufacturer's name or logo, city, state and series and following statement: "Miami-Dade County Product Control Approved", noted herein.

RENEWAL of this NOA shall be considered after a renewal application has been filed and there has been no change in the applicable building code negatively affecting the performance of this product.

TERMINATION of this NOA will occur after the expiration date or if there has been a revision or change in the materials, use, and/or manufacture of the product or process. Misuse of this NOA as an endorsement of any product, for sales, advertising or any other purposes shall automatically terminate this NOA. Failure to comply with any section of this NOA shall be cause for termination and removal of NOA.

ADVERTISEMENT: The NOA number preceded by the words Miami-Dade County, Florida, and followed by the expiration date may be displayed in advertising literature. If any portion of the NOA is displayed, then it shall be done in its entirety.

INSPECTION: A copy of this entire NOA shall be provided to the user by the manufacturer or its distributors and shall be available for inspection at the job site at the request of the Building Official.

This NOA **renews NOA #15-0615.01** and consists of this page 1 and evidence pages E-1 & E-2, as well as approval document mentioned above.

The submitted documentation was reviewed by **Ishaq I. Chanda, P.E.**

MIAMI-DADE COUNTY APPROVED

12/9/16

NOTICE OF ACCEPTANCE: EVIDENCE SUBMITTED

A. DRAWINGS

1. Manufacturer's die drawings and sections(See files below)
2. Drawing No. **W01-64** Rev **K**, titled "Series" 1800" Alum Outswing Doo w/ sidelite (LMI)", sheets 1 through 15 of 15 (inclusive sheets 1.1, 2.1, 4.1 and 10.1), dated MAY 06, 2016, prepared by AL-Farooq Corporation, signed and sealed by Javad Ahmad, P.E.

B. TESTS (Submitted under files #**15-0615.01/#11-1209.07/ # 10-0930.07/09-0316.05**)

1. Test reports on: 1) Air Infiltration Test, per FBC, TAS 202-94
   2) Uniform Static Air Pressure Test, Loading per FBC TAS 202-94
   3) Water Resistance Test, per FBC, TAS 202-94
   4) Large Missile Impact Test per FBC, TAS 201-94
   5) Cyclic Wind Pressure Loading per FBC, TAS 203-94
   6) Forced Entry Test, per FBC 2411 3.2.1, TAS 202-94

Along with marked-up drawings and installation diagram of an OXO aluminum Outswing door, prepared by Fenestration Testing Lab., Test Report No. **FTL-5701**, dated 11/13/08, signed and sealed by Carlos S. Roinda, P. E.

Along with marked-up drawings and installation diagram of Single Outswing door w/ SHW, prepared by Fenestration Testing Lab., Test Report No. **FTL-5675**, dated 09/11/08, signed and sealed by Carlos S. Roinda, P. E

2. Additional Test reports on: 1) Large Missile Impact Test per FBC, TAS 201-94
   2) Cyclic Wind Pressure Loading per FBC, TAS 203-94

Along with marked-up drawings and installation diagram of an aluminum outswing Door w/ 3-point lock, prepared by Fenestration Testing Lab., Inc., Test Report No. **FTL-3389**, dtd 6 /25/02, signed and sealed by Edmundo Largaespada, P.E. *(Submitted under#**06-1229.03**)*

4. Test reports on: 1) Air Infiltration Test, per FBC, TAS 202-94
   2) Uniform Static Air Pressure Test, Loading per FBC TAS 202-94
   3) Water Resistance Test, per FBC, TAS 202-94
   4) Large Missile Impact Test per FBC, TAS 201-94
   5) Cyclic Wind Pressure Loading per FBC, TAS 203-94
   6) Forced Entry Test, per FBC 2411 3.2.1, TAS 202-94

Along with marked-up drawings and installation diagram of double Outswing aluminum French Door, prepared by Fenestration Testing Laboratory, Inc., Test Report No. **FTL-2682**, dtd 7/12/01, signed and sealed by Luis Figueredo, P.E.*(Submitted under NOA **#03-0805.07** Yale Ogron Mfg. Co.).*

C. CALCULATIONS (Submitted under files #**15-0615.01**)

1. Anchor verification calculations and structural analysis, complying with FBC 2014(5th Edition), prepared by Al Farooq Corporation, dated 06/03/15, 03/30/16 and last revised on MAY 06, 2016, signed and sealed by Javad Ahmad, P.E.
2. Glazing complies w/ ASTME-1300-02, -04 & -09.

D. QUALITY ASSURANCE

1. Miami Dade Department of Regulatory and Economic Resources (RER).

Ishaq I. Chanda

Ishaq I. Chanda, P.E.
Product Control Examiner
NOA No. 16-1110.01
Expiration Date: January 30, 2022
Approval Date: December 22, 2016

NOTICE OF ACCEPTANCE: EVIDENCE SUBMITTED

E. MATERIAL CERTIFICATIONS

1. Notice of Acceptance No. **13-1105.10** issued to **SAF-GLAS, LLC** for their "**SAF-GLAS Polycarbonate Glass Interlayer**", expiring on 12/16/17
2. Notice of Acceptance No. **15-1201.11** issued to Eastman Chemical Company (MA) former Solutia Inc. for their "**Saflex Clear or colored interlayer**", expiring on 05/21/21.

F. STATEMENTS (All items except #1, submitted under files #**15-0615.01**)

1. Statement letter dated 11/15/16 issued by AWP, LLC requesting Renewal with no change, signed by Gerardo Beros, Director of Engineering.
2. Statement letter of conformance to FBC 2014(5th Edition) and "No Financial interest", prepared by Al-Farooq Corporation, dated 07/28/15, signed and sealed by Javad Ahmad, P.E.
3. Statement letter of compliance, as part of the above referenced test reports.
4. Sales agreement between AWP, LLC (Acquiror) and Arch Aluminum & Glass Enterprise, a Delaware Corp (Asset Seller) dated MAR 20, 2014, signed by Paul Schmitz, President and Tim Morris Jr., President, respectively.
5. Statement letter dated April 20, 2015, issued by Trulite Window & Door Solution, LLC, stating Trulite has legally sold to AWP Windows and Doors, LLC, all the NOA(s) per schedule A and gave-up all rights to NOA(s) and request to rescind all NOA(s) under Trulite, signed by Kevin Barret, CFO (Trulite).
6. Statement letter dated July 15, 2014 requesting name change from Trulite windows and doors solution, LLC to AWP windows and Doors, LLC, signed by Gerardo Beros, Director of Engineering (AWP).
7. Asset purchase agreement dated 11/01/06 among AWP, LLC (Buyer) and Yale Ogron Windows & Door Inc. (seller), signed by Leon J. Silverstein and Manny Valladares, respectively (submitted under #**12-0118.32**/ #**11-0222.02**).

G. OTHER

1. This NOA **renews NOA #15-0615.01**, expiring on Jan 30, 2022.
2. Test proposal #**14-0778-R** dated 10/28/15, dated 06-14-00, 09-20-01 and 11-06-07, approved by BCCO.
3. Previous associated files are #**15-0615.01**(Trulite windows and doors solution, LLC), #**11-1209.07** (Trulite windows and doors solution, LLC) # **10-0930.07/#09-0316.05, #03-0805.07** (Yale Ogron Mfg. Co)

Ishaq I. Chanda

Ishaq I. Chanda, P.E.
Product Control Examiner
NOA No. 16-1110.01
Expiration Date: January 30, 2022
Approval Date: December 22, 2016

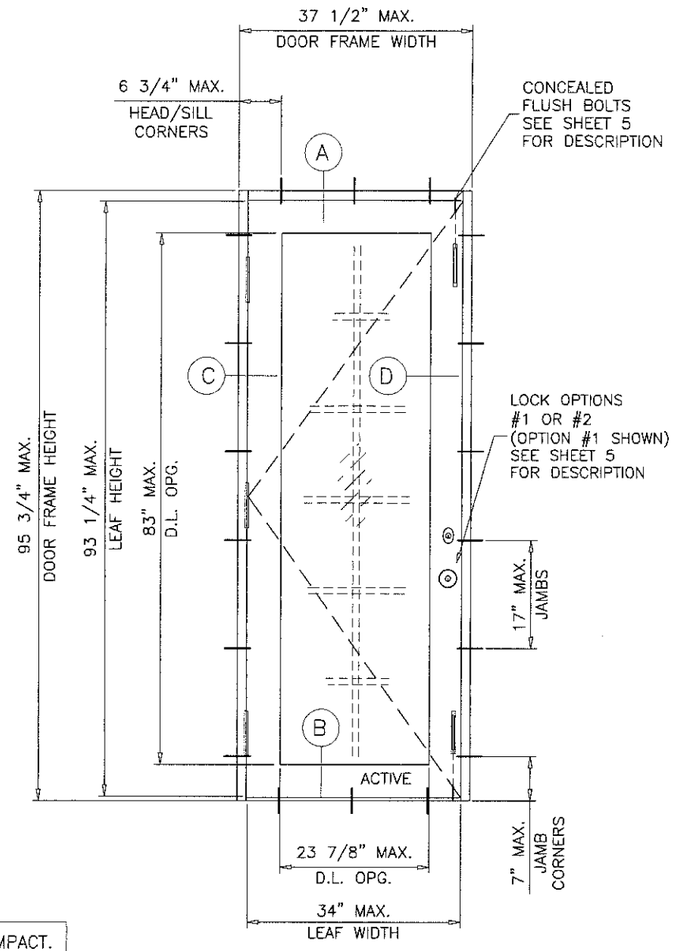

TYPICAL ELEVATION

(X)

SINGLE LEAF DOOR

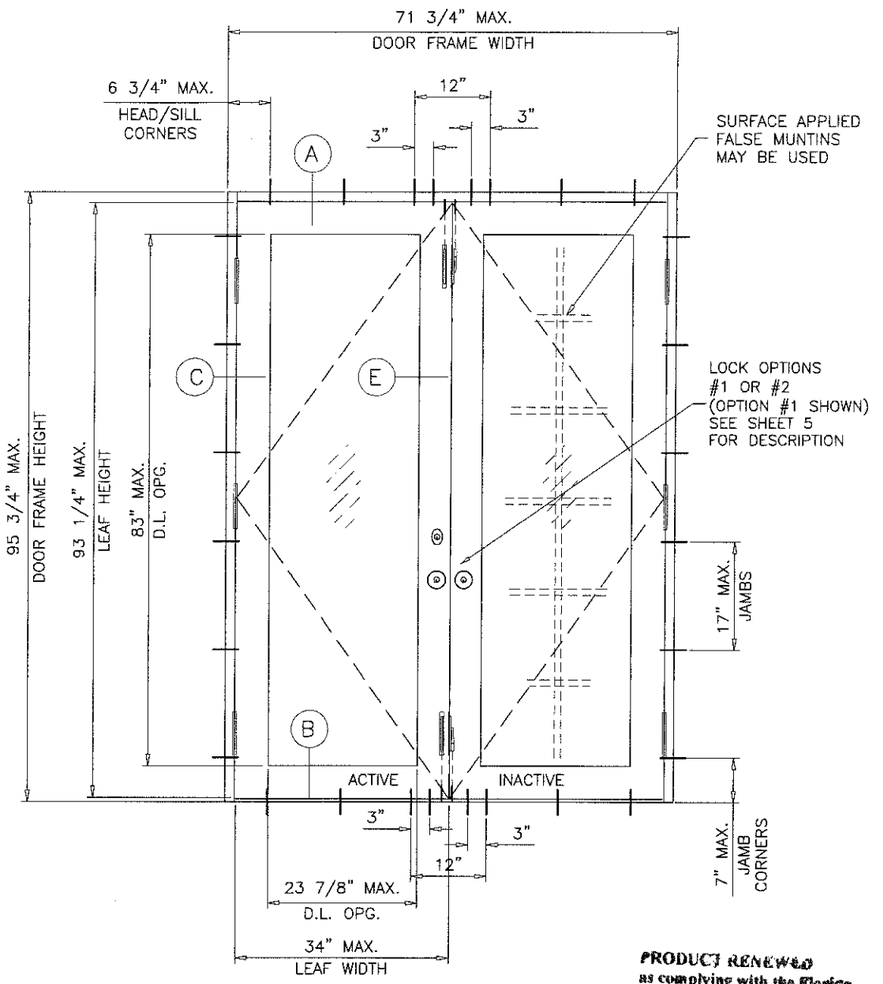

TYPICAL ELEVATION

(XX)

DUAL LEAF DOOR

DOORS/SIDELITES ARE RATED FOR LARGE AND SMALL MISSILE IMPACT.
SHUTTERS ARE NOT REQUIRED.

SERIES 1800 ALUM. OUTSWING DOOR W/ SIDELITES

APPROVAL APPLIES TO SINGLE (X) AND DOUBLE (XX) LEAF DOORS WITH OR WITHOUT SIDELITES.
SIDE LITES CAN BE ON ONE OR BOTH SIDES OF DOOR.
SEE SHEETS 4 & 4.1 FOR DESIGN LOAD CAPACITIES.

THIS PRODUCT HAS BEEN DESIGNED AND TESTED TO COMPLY WITH THE REQUIREMENTS OF THE 2014 (5TH EDITION) FLORIDA BUILDING CODE INCLUDING HIGH VELOCITY HURRICANE ZONE (HVHZ).

1BY OR 2BY WOOD BUCKS BY OTHERS, MUST BE ANCHORED PROPERLY TO TRANSFER LOADS TO THE STRUCTURE.

ANCHORS SHALL BE AS LISTED, SPACED AS SHOWN ON DETAILS, ANCHORS EMBEDMENT TO BASE MATERIAL SHALL BE BEYOND WALL DRESSING OR STUCCO.

ANCHORING OR LOADING CONDITIONS NOT SHOWN IN THESE DETAILS ARE NOT PART OF THIS APPROVAL.

A LOAD DURATION INCREASE IS USED IN DESIGN OF ANCHORS INTO WOOD ONLY.

ALL SHIMS TO BE HIGH IMPACT, NON-METALLIC AND NON-COMPRESSIBLE.

MATERIALS INCLUDING BUT NOT LIMITED TO STEEL/METAL SCREWS, THAT COME INTO CONTACT WITH OTHER DISSIMILAR MATERIALS SHALL MEET THE REQUIREMENTS OF THE 2014 FLORIDA BUILDING CODE.

DOORS APPROVED FOR INSTALLATIONS WHERE WATER INFILTRATION RESISTANCE IS REQUIRED.

DOOR OPTIONS

LAMINATED GLASS TYPES 'A', 'B' & 'D'

SEE SHEET 4 FOR DESIGN PRESSURE RATING

GLASS D.L.O. DIMS.

D.L.O. HEIGHT (DOOR & SIDELITE) = FRAME HEIGHT - 13"
D.L.O. WIDTH (X DOORS & O PANELS) = FRAME WIDTH - 13.625"
D.L.O. WIDTH (XX DOORS) = (FRAME WIDTH - 24")/2

PRODUCT RENEWED
as complying with the Florida
Building Code
Acceptance No 16-1110.01
Expiration Date JAN 30, 2022
By
Miami Dade Product Control

PRODUCT REVISED
as complying with the Florida
Building Code
Acceptance No 15-0615.01
Expiration Date JAN 30 2017
By
Miami Dade Product Control

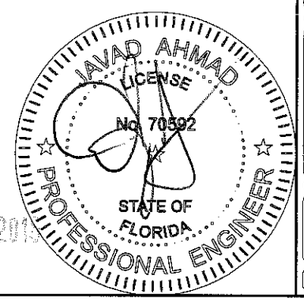

MAY 06 2016

AL-FAROOQ CORPORATION
ENGINEERS & PRODUCT DEVELOPMENT
9360 SUNSET DRIVE, SUITE 220
MIAMI, FLORIDA 33173 (C.A.N. 3538)
TEL. (305) 264-8100 FAX. (305) 262-6978

COMP-ANL\W01-64AWP

SERIES 1800 ALUM OUTSWING DOOR W/ SIDELITES (I.M.I.)

AWP WINDOWS AND DOORS, LLC
8130 N.W. 74TH AVE.
MEDLEY, FL. 33166
TEL. (305) 887-2646 FAX (305) 883-1309

revisions:

no	date	by	description
G	11.22.10		REV. PER BCCO COMMENTS
H	08.15.11		UPDATED FOR 2010 FBC
I	05.15.15		UPDATED FOR 2014 FBC
J	03.25.16		INSUL. GLASS OPTION ADDED
K	05.06.16		REV. PER RER COMMENTS

date: 09-17-01
scale: 1/2"=1'-0"
dr. by: TARIQ
chk. by:

drawing no.
W01-64

sheet 1 of 15

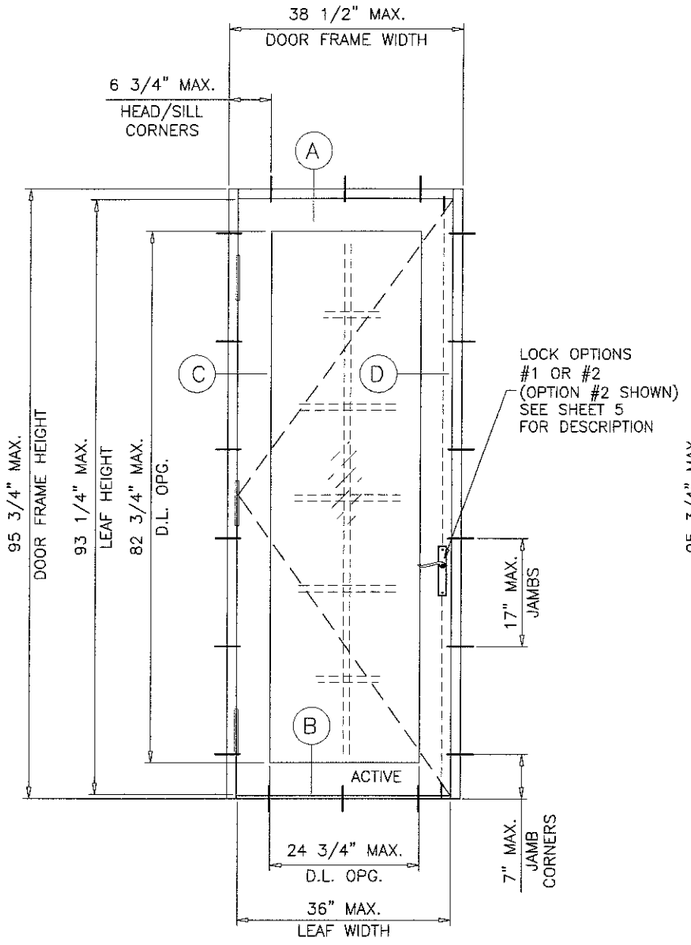

TYPICAL ELEVATION

(X)

SINGLE LEAF DOOR

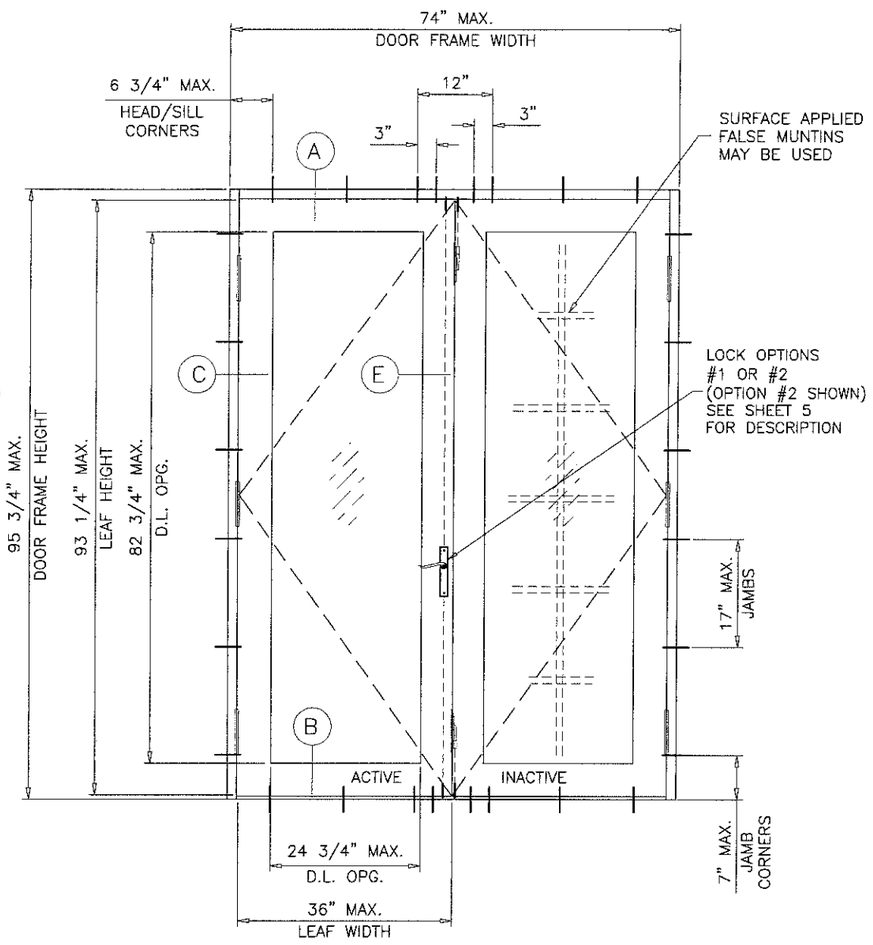

TYPICAL ELEVATION

(XX)

DUAL LEAF DOOR

PRODUCT REVISED
as complying with the Florida
Building Code
Acceptance No 15-0615.01
Expiration Date 1/30/17
By Ishaq I. Chanda
Miami Dade Product Control

DOOR OPTIONS

INSUL. LAM. GLASS TYPE 'E'

SEE SHEET 4.1 FOR DESIGN PRESSURE RATING

PRODUCT RENEWED
as complying with the Florida
Building Code
Acceptance No 16-1110.01
Expiration Date 1/30/22
By Ishaq I. Chanda
Miami Dade Product Control

GLASS D.L.O. DIMS.

D.L.O. HEIGHT (DOOR & SIDELITE) = FRAME HEIGHT – 13"
D.L.O. WIDTH (X DOORS & O PANELS) = FRAME WIDTH – 13.750"
D.L.O. WIDTH (XX DOORS) = (FRAME WIDTH – 24.50")/2

MAY 06 2016

JAVAD AHMAD
LICENSE
No. 70592
STATE OF
FLORIDA
PROFESSIONAL ENGINEER

AL-FAROOQ CORPORATION
ENGINEERS & PRODUCT DEVELOPMENT
9360 SUNSET DRIVE, SUITE 220
MIAMI, FLORIDA 33173 (C.A.N. 3538)
TEL. (305) 264-8100 FAX. (305) 262-6978

COMP-ANL\W01-64AWP

SERIES 1800 ALUM OUTSWING DOOR W/ SIDELITES (L.M.I.)

AWP WINDOWS AND DOORS, LLC
8130 N.W. 74TH AVE.
MEDLEY, FL. 33166
TEL. (305) 887-2646 FAX (305) 883-1309

revisions:			
no	date	by	description
J	03.25.16		INSUL. GLASS OPTION ADDED
K	05.06.16		REV. PER RER COMMENTS

date: 09-17-01
scale: 1/2"=1'-0"
dr. by: TARIQ
chk. by:

drawing no.
W01-64

sheet 1.1 of 15

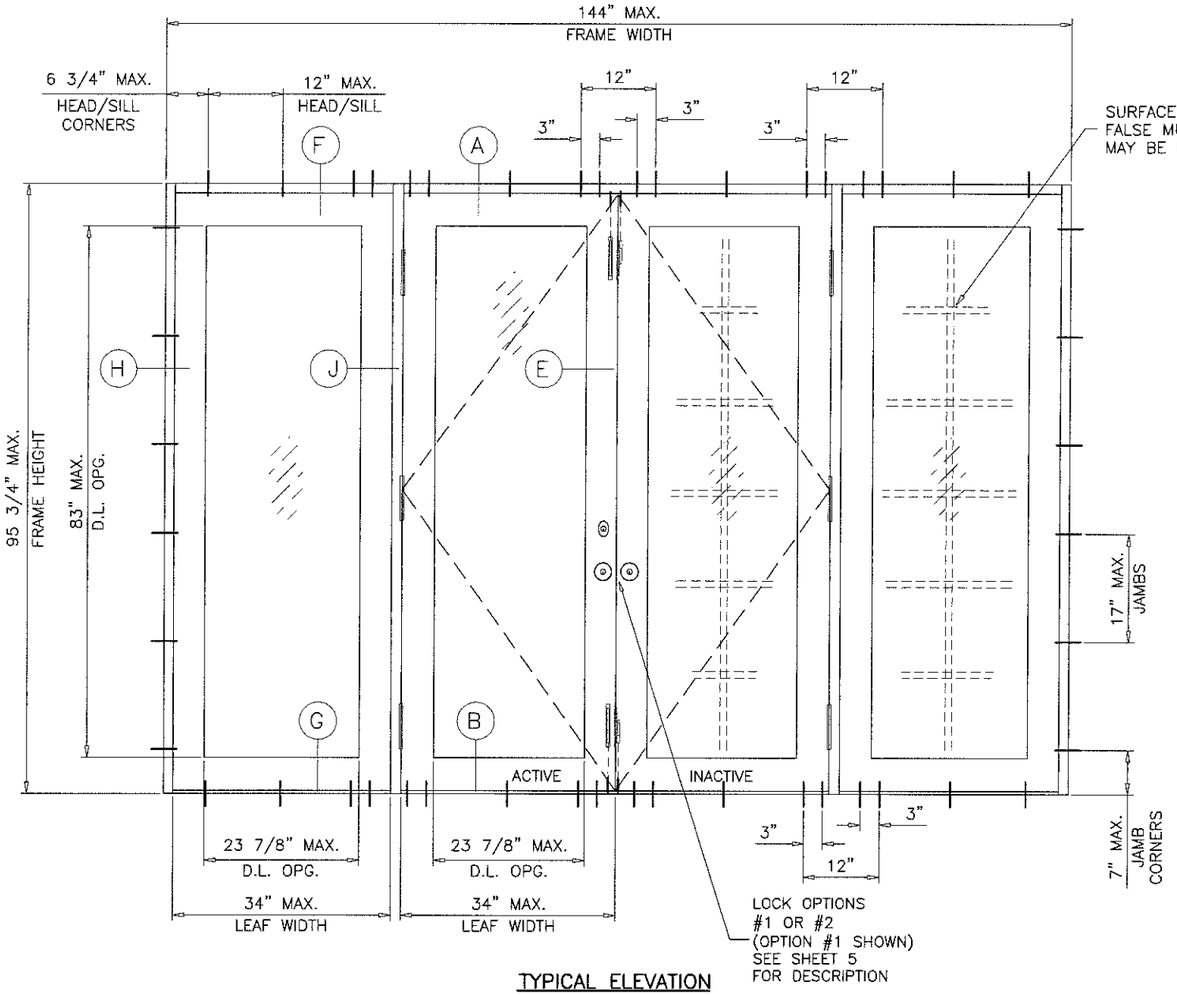

TYPICAL ELEVATION

(OXXO)

WITH PANEL SIDELITES

NOTE:
THE FRAME AREA OF ALTERNATE SIZE UNIT MUST NOT EXCEED
TESTED FRAME AREA = 95.75 SQ. FT.

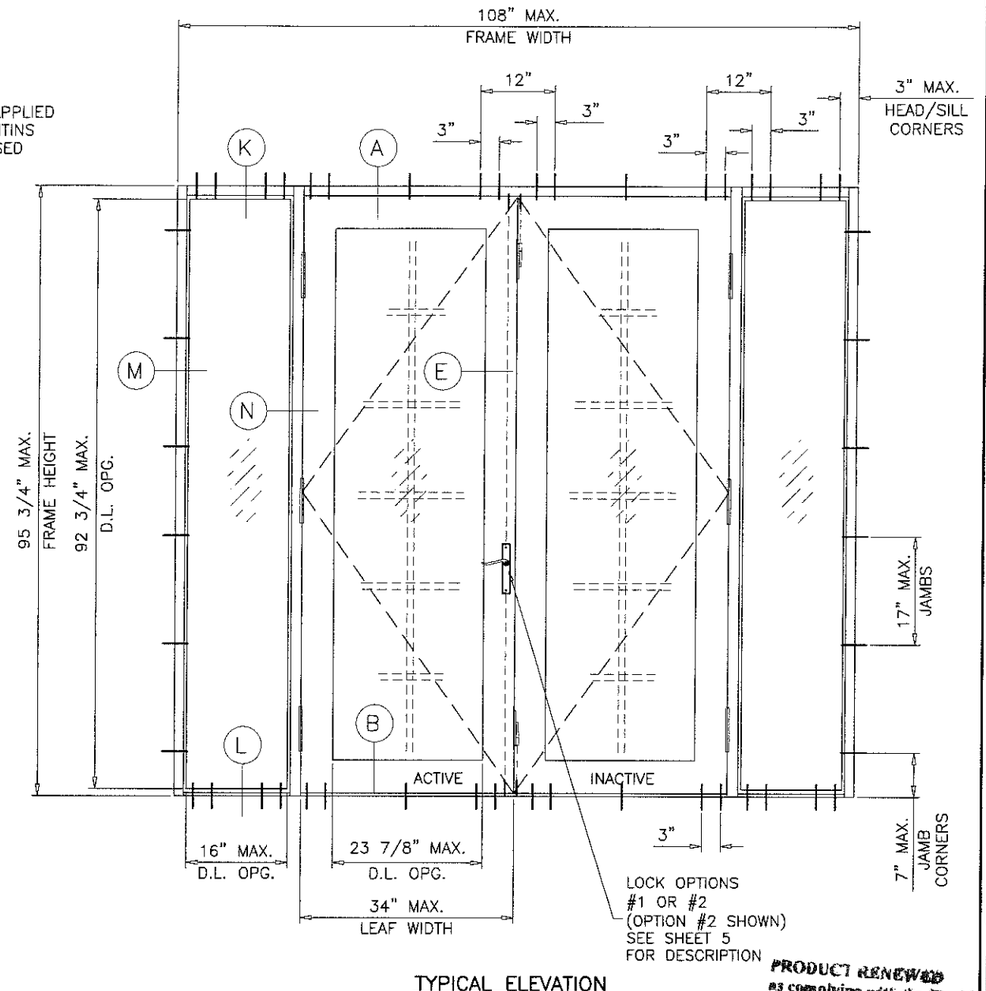

TYPICAL ELEVATION

(OXXO)

WITH DIRECT SET SIDELITES

NOTE:
THE FRAME AREA OF ALTERNATE SIZE UNIT MUST NOT EXCEED
TESTED FRAME AREA = 71.81 SQ. FT.

PRODUCT RENEWED
as complying with the Florida
Building Code
Acceptance No. 16-1110.01
Expiration Date 1/30/22
By Ishaq I. Chanda
Miami Dade Product Control

DOORS WITH SIDELITES OPTIONS

LAMINATED GLASS TYPES 'A', 'B' & 'D'

SEE SHEET 4 FOR DESIGN PRESSURE RATING

PRODUCT REVISED
as complying with the Florida
Building Code
Acceptance No. 15-0615.01
Expiration Date 1/30/17
By Ishaq I. Chanda
Miami Dade Product Control

MAY 06 2016

JAWAD AHMAD
LICENSE
No. 70592
STATE OF
FLORIDA
PROFESSIONAL ENGINEER

afc
AL-FAROOQ CORPORATION
ENGINEERS & PRODUCT DEVELOPMENT
9360 SUNSET DRIVE, SUITE 220
MIAMI, FLORIDA 33173 (C.A.N. 3538)
TEL. (305) 264-8100 FAX. (305) 262-6978
COMP-ANL\W01-64AWP

SERIES 1800 ALUM OUTSWING DOOR W/ SIDELITES (L.M.I.)

AWP WINDOWS AND DOORS, LLC
8130 N.W. 74TH AVE.
MEDLEY, FL. 33166
TEL. (305) 887-2646 FAX (305) 883-1309

revisions:

no	date	by	description
G	11.22.10		REV. PER BCCO COMMENTS
H	08.15.11		UPDATED FOR 2010 FBC
I	05.15.15		UPDATED FOR 2014 FBC
J	03.25.16		INSUL. GLASS OPTION ADDED
K	05.06.16		REV. PER RER COMMENTS

date: 09-17-01
scale: 1/2"=1'-0"
dr. by: TARIQ
chk. by:

drawing no.
W01-64

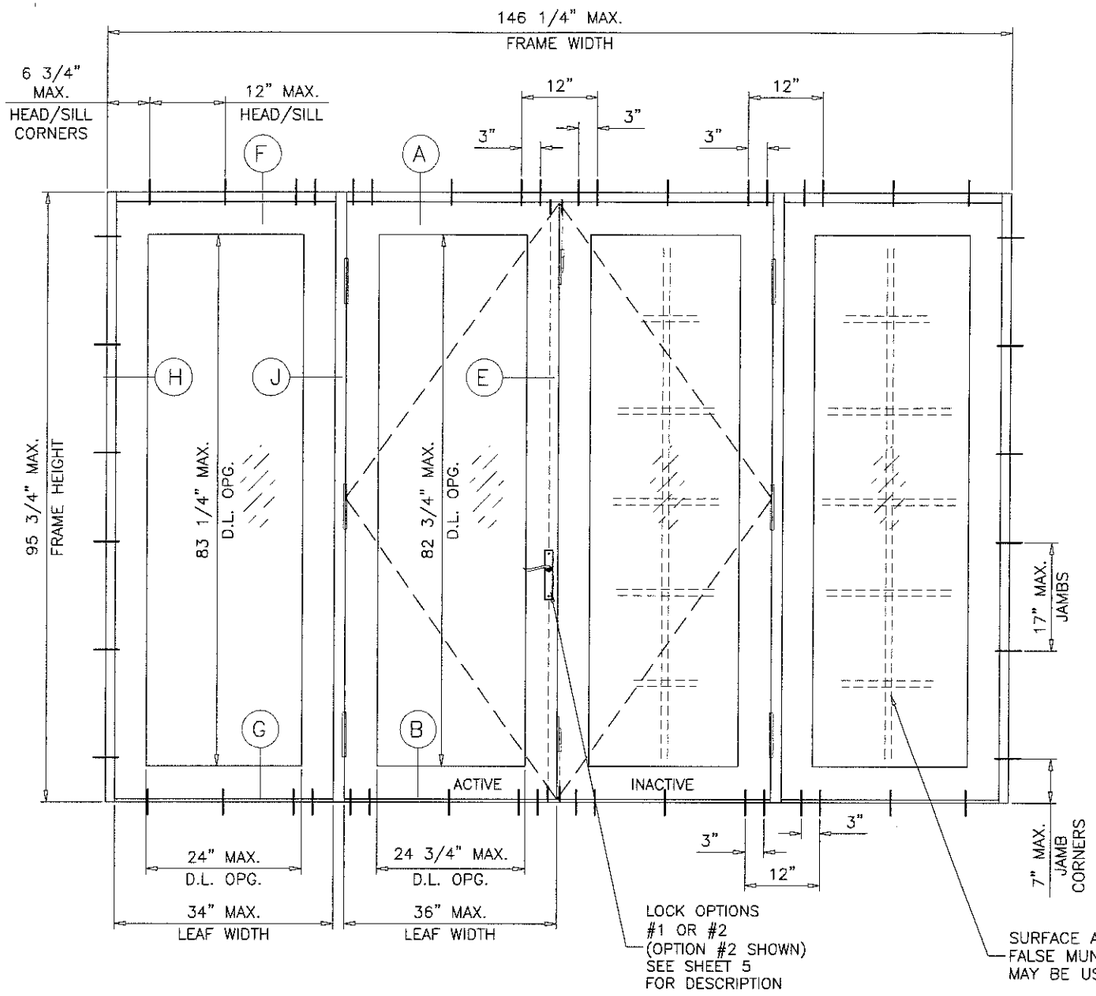

TYPICAL ELEVATION

(OXXO)

DOORS WITH PANEL SIDELITES

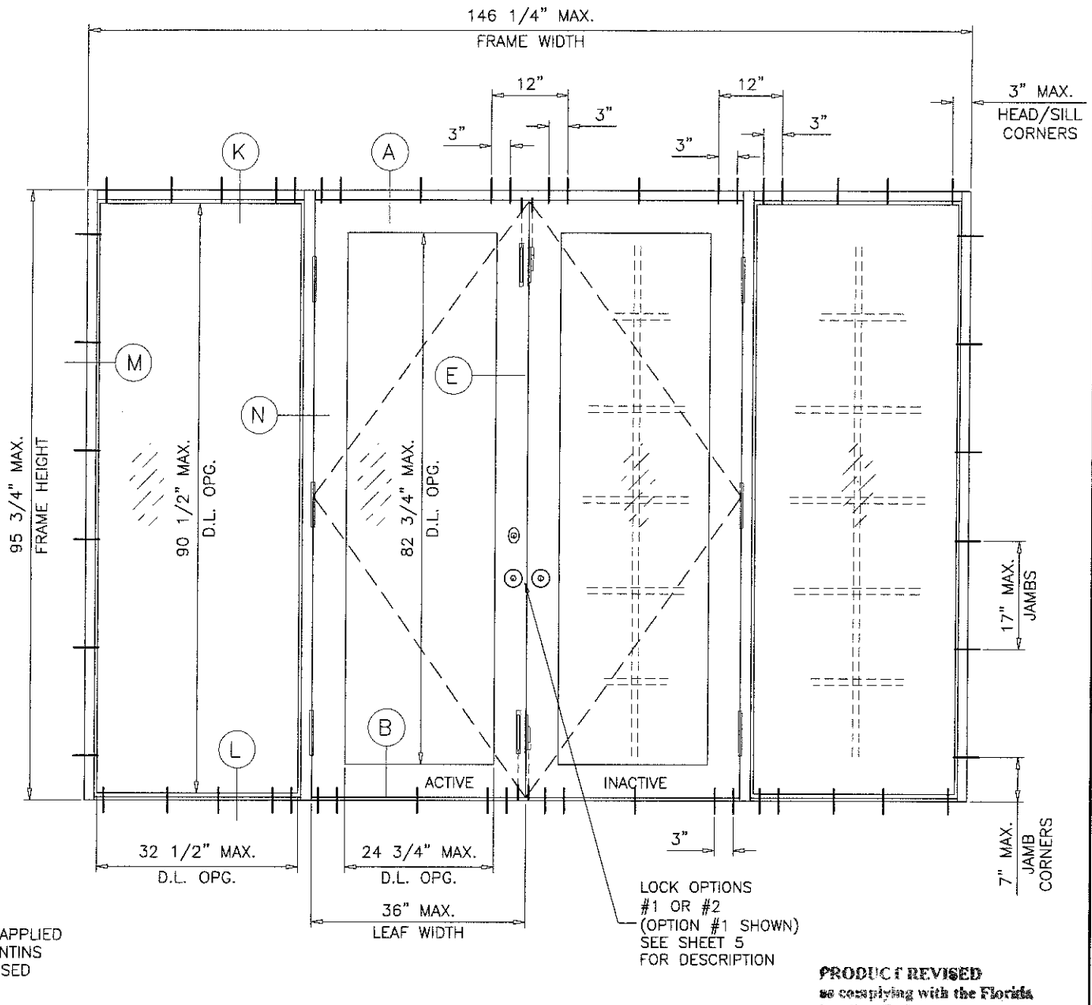

TYPICAL ELEVATION

(OXXO)

DOORS WITH DIRECT SET SIDELITES

NOTE:
THE FRAME AREA OF ALTERNATE SIZE UNIT MUST NOT EXCEED
TESTED FRAME AREA = 97.24 SQ. FT.

DOORS WITH SIDELITES OPTIONS

INSUL. LAM. GLASS TYPE 'E'

SEE SHEET 4.1 FOR DESIGN PRESSURE RATING

PRODUCT REVISED
as complying with the Florida Building Code
Acceptance No. 15-0615.01
Expiration Date 1/30/17
By [signature]
Miami-Dade Product Control

PRODUCT RENEWED
as complying with the Florida Building Code
Acceptance No. 16-1116.01
Expiration Date 1/30/22
By [signature]
Miami-Dade Product Control

MAY 06 20[illegible]

JAVAD AHMAD
LICENSE
No. 70592
STATE OF FLORIDA
PROFESSIONAL ENGINEER

AL-FAROOQ CORPORATION
ENGINEERS & PRODUCT DEVELOPMENT
9360 SUNSET DRIVE, SUITE 220 (C.A.N. 3538)
MIAMI, FLORIDA 33173
TEL. (305) 264-8100 FAX. (305) 262-6978

COMP-ANL\W01-64AWP

SERIES 1800 ALUM OUTSWING DOOR W/ SIDELITES (L.M.I.)

AWP WINDOWS AND DOORS, LLC
8130 N.W. 74TH AVE.
MEDLEY, FL. 33166
TEL. (305) 887-2646 FAX (305) 883-1309

revisions:			
no.	date	by	description
J	03.25.16		INSUL. GLASS OPTION ADDED
K	05.06.16		REV. PER RER COMMENTS

date: 09-17-01
scale: 1/2"=1'-0"
dr. by: TARIQ
chk. by:

drawing no.
W01-64

sheet 2.1 of 15

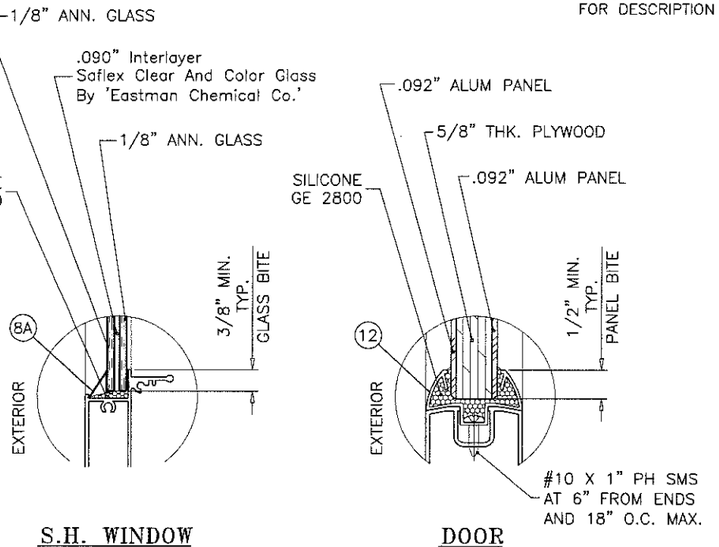

S.H. WINDOW

DOOR
PARTIAL ALUM CLAD PANEL

GLAZING DETAILS

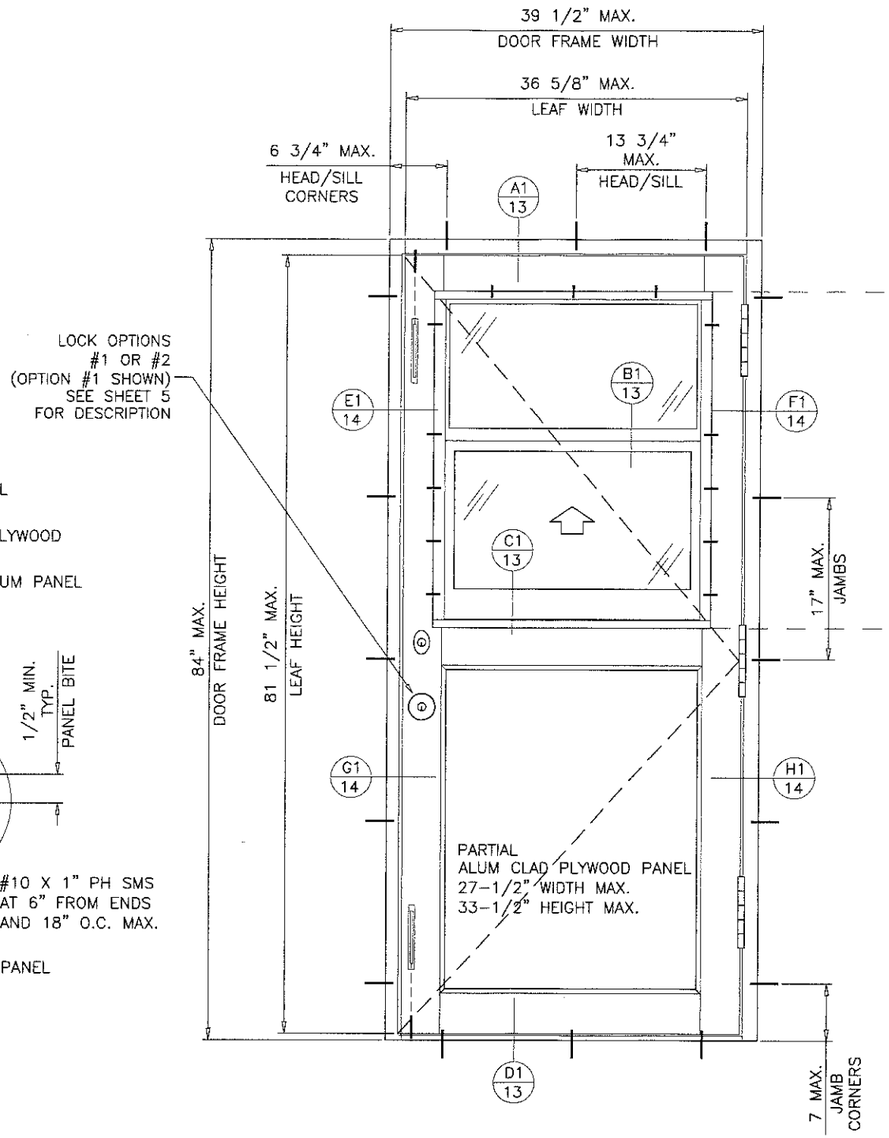

TYPICAL ELEVATION

(X)

FOR DESIGN LOAD CAPACITY SEE SHEET 4

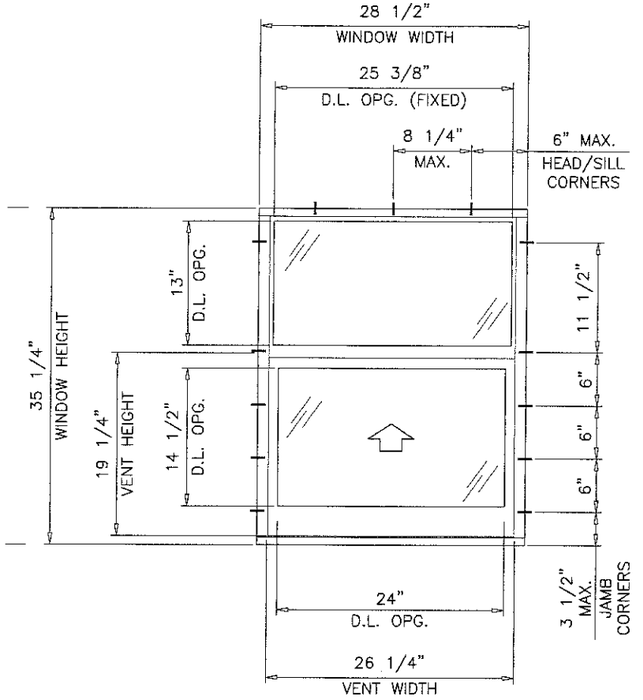

NOTE:
AWP SINGLE HUNG WINDOW IS INTEGRAL PART OF THIS DOOR.

SINGLE LEAF DOOR WITH AWP SERIES 2500 SINGLE HUNG WDW. INSERT

WINDOW INSERT OPTION

PRODUCT RENEWED
as complying with the Florida
Building Code
Acceptance No. 16-1110.01
Expiration Date 11/20/22
By
Miami Dade Product Control

PRODUCT REVISED
as complying with the Florida
Building Code
Acceptance No. 15-0615.01
Expiration Date 11/30/17
By
Miami Dade Product Control

MAY 06 2016

JAVAD AHMAD
LICENSE
No. 70592
STATE OF
FLORIDA
PROFESSIONAL ENGINEER

AL-FAROOQ CORPORATION
ENGINEERS & PRODUCT DEVELOPMENT
9360 SUNSET DRIVE, SUITE 220
MIAMI, FLORIDA 33173 (C.A.N. 3538)
TEL. (305) 264-8100 FAX. (305) 262-6978

COMP-ANL\W01-64AWP

SERIES 1800 ALUM OUTSWING DOOR W/ SIDELITES (L.M.I.)

AWP WINDOWS AND DOORS, LLC
8130 N.W. 74TH AVE.
MEDLEY, FL. 33166
TEL. (305) 887-2646 FAX (305) 883-1309

revisions:

no	date	by	description
G	11.22.10		REV. PER BCCO COMMENTS
H	08.15.11		UPDATED FOR 2010 FBC
I	05.15.15		UPDATED FOR 2014 FBC
J	03.25.16		INSUL. GLASS OPTION ADDED
K	05.06.16		REV. PER RER COMMENTS

date: 09-17-01
scale: 3/4"=1'-0"
dr. by: TARIQ
chk. by:

drawing no.
W01-64

sheet 3 of 15

SINGLE LEAF (X) DOORS WITHOUT SIDELITES			
DESIGN LOAD CAPACITY – PSF			
DOOR FRAME WIDTH (INCHES)	DOOR FRAME HEIGHT (INCHES)	GLASS TYPES 'A', 'B' OR 'D' EXT.(+)	INT.(–)
31 1/2	79 3/4	65.0	65.0
37 1/2		65.0	65.0
31 1/2	83 3/4	65.0	65.0
37 1/2		65.0	65.0
31 1/2	95 3/4	65.0	65.0
37 1/2		65.0	65.0

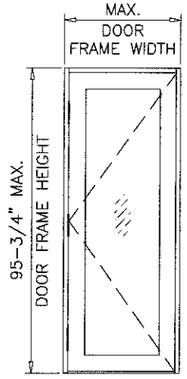

(X)

DOUBLE LEAF (XX) DOORS WITHOUT SIDELITES			
DESIGN LOAD CAPACITY – PSF			
DOOR FRAME WIDTH (INCHES)	DOOR FRAME HEIGHT (INCHES)	GLASS TYPES 'A', 'B' OR 'D' EXT.(+)	INT.(–)
60	79 3/4	65.0	65.0
71 3/4		65.0	65.0
60	83 3/4	65.0	65.0
71 3/4		65.0	65.0
60	95 3/4	65.0	65.0
71 3/4		65.0	65.0

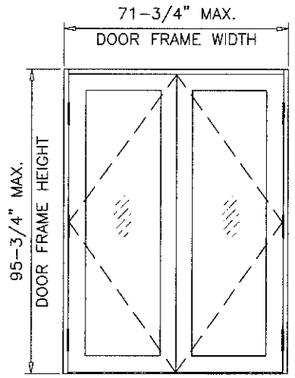

(XX)

SINGLE LEAF (X) DOORS WITH S.H. INSERT			
DESIGN LOAD CAPACITY – PSF			
DOOR FRAME WIDTH (INCHES)	DOOR FRAME HEIGHT (INCHES)	5/8" PLYWOOD .092" ALUM PANEL EXT.(+)	INT.(–)
31 1/2	83 3/4	65.0	65.0
39 1/2		65.0	65.0

LOWER DESIGN PRESSURE FROM THE SINGLE DOOR OR AWP SINGLE HUNG WINDOW SHALL CONTROL THE ENTIRE UNIT.

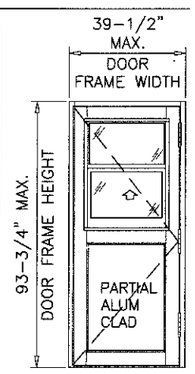

STATIONARY PANEL (O) OR DOORS WITH SIDELITES					
DESIGN LOAD CAPACITY – PSF					
DOOR FRAME HEIGHT (INCHES)	DOOR FRAME WIDTH (INCHES)	PANEL SIDELITE WIDTH (INCHES)	DIRECT SET SIDELITE WIDTH (INCHES)	GLASS TYPES 'A', 'B' OR 'D' EXT. (+)	INT. (–)
79 3/4	31 1/2 (X) 60 (XX)	30	18	65.0	65.0
		36	18	65.0	65.0
		42	18	55.7	55.7
	37 1/2 (X) 71 3/4 (XX)	30	18	65.0	65.0
		36	18	65.0	65.0
		42	18	55.7	55.7
83 3/4	31 1/2 (X) 60 (XX)	30	18	65.0	65.0
		36	18	65.0	65.0
	37 1/2 (X) 71 3/4 (XX)	30	18	65.0	65.0
		36	18	65.0	65.0
95 3/4	31 1/2 (X) 60 (XX)	30	18	65.0	65.0
		36	18	65.0	65.0
	37 1/2 (X) 71 3/4 (XX)	30	18	65.0	65.0
		36	18	65.0	65.0

AUTHORITY HAVING JURISDICTION TO VERIFY EGRESS REQUIREMENTS.

GLAZING OPTIONS:
LAMINATED GLASS TYPES 'A', 'B' & 'D'

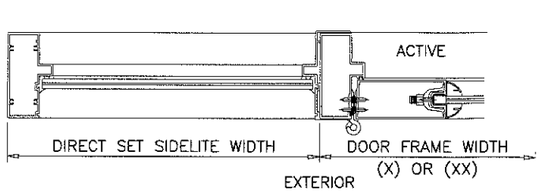

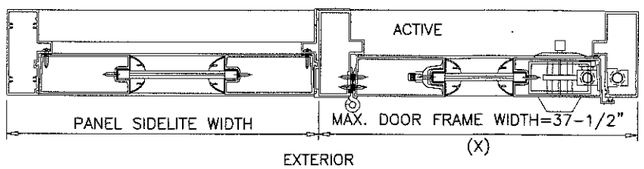

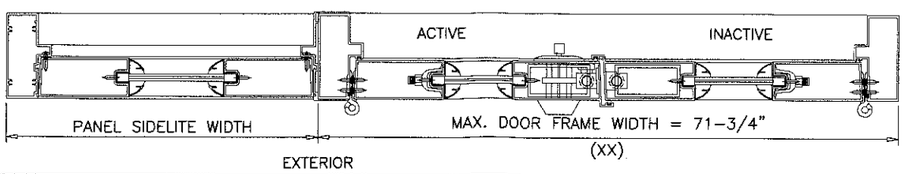

NOTE:
GLASS CAPACITIES ON THIS SHEET ARE BASED ON ASTM E1300–09 (3 SEC. GUSTS) AND FLORIDA BUILDING COMMISSION DECLARATORY STATEMENT DCA05–DEC–219

PRODUCT RENEWED
as complying with the Florida Building Code
Acceptance No. 16-1110.01
Expiration Date 1/30/22
By
Miami-Dade Product Control

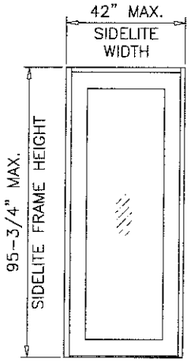

(O)

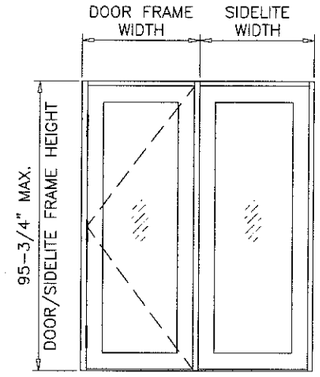

(XO)
(OX)

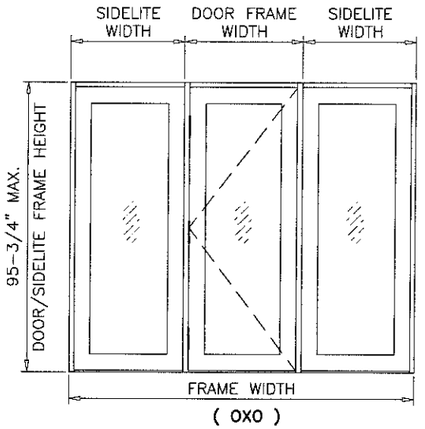

(OXO)

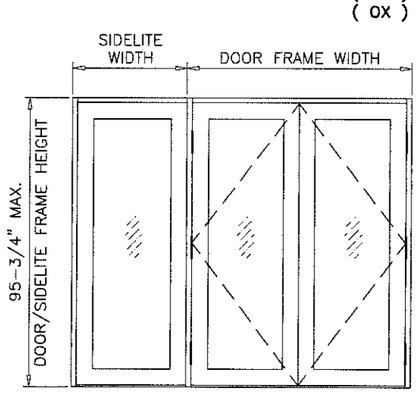

(OXX)
(XXO)

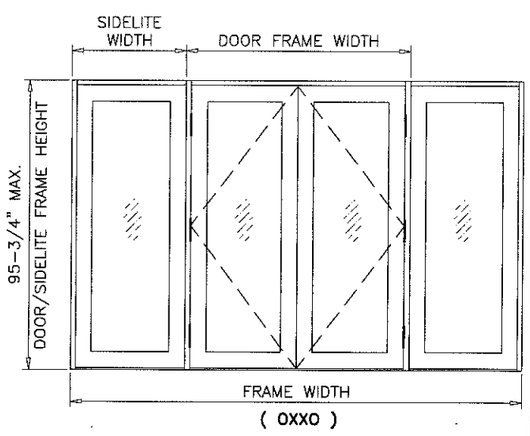

(OXXO)

PRODUCT REVISED
as complying with the Florida Building Code
Acceptance No. 15-0615.01
Expiration Date 1/30/17
By
Miami-Dade Product Control

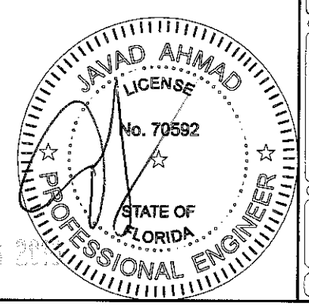

MAY 06 20

AL-FAROOQ CORPORATION
ENGINEERS & PRODUCT DEVELOPMENT
9360 SUNSET DRIVE, SUITE 220
MIAMI, FLORIDA 33173 (C.A.N. 3538)
TEL. (305) 264-8100 FAX. (305) 262-6978

COMP–ANL\W01–64AWP

SERIES 1800 ALUM OUTSWING DOOR W/ SIDELITES (L.M.I.)

AWP WINDOWS AND DOORS, LLC
8130 N.W. 74TH AVE.
MEDLEY, FL. 33166
TEL. (305) 887–2646 FAX (305) 883–1309

revisions:			
no	date	by	description
G	11.22.10		REV. PER BCCO COMMENTS
H	08.15.11		UPDATED FOR 2010 FBC
I	05.15.15		UPDATED FOR 2014 FBC
J	03.25.16		INSUL. GLASS OPTION ADDED
K	05.06.16		REV. PER RER COMMENTS

date: 09–17–01
scale: 3/8" = 1"
dr. by: TARIQ
chk. by:

drawing no. W01–64

SINGLE LEAF (X) DOORS WITHOUT SIDELITES			
DESIGN LOAD CAPACITY – PSF			
DOOR FRAME WIDTH (INCHES)	DOOR FRAME HEIGHT (INCHES)	GLASS TYPE 'E'	
		EXT.(+)	INT.(–)
31 1/2	79 3/4	65.0	65.0
38 1/2		65.0	65.0
31 1/2	83 3/4	65.0	65.0
38 1/2		65.0	65.0
31 1/2	95 3/4	65.0	65.0
38 1/2		65.0	65.0

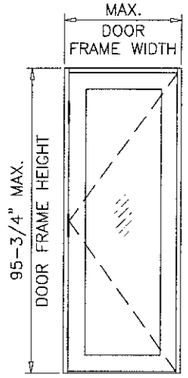

(X)

DOUBLE LEAF (XX) DOORS WITHOUT SIDELITES			
DESIGN LOAD CAPACITY – PSF			
DOOR FRAME WIDTH (INCHES)	DOOR FRAME HEIGHT (INCHES)	GLASS TYPE 'E'	
		EXT.(+)	INT.(–)
60	79 3/4	65.0	65.0
74		65.0	65.0
60	83 3/4	65.0	65.0
74		65.0	65.0
60	95 3/4	65.0	65.0
74		65.0	65.0

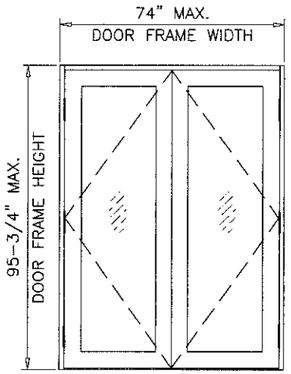

(XX)

STATIONARY PANEL (O) OR DOORS WITH SIDELITES					
DESIGN LOAD CAPACITY – PSF					
DOOR FRAME HEIGHT (INCHES)	DOOR FRAME WIDTH (INCHES)	PANEL SIDELITE WIDTH (INCHES)	DIRECT SET SIDELITE WIDTH (INCHES)	GLASS TYPE 'E'	
				EXT. (+)	INT. (–)
79 3/4	31 1/2 (X) 60 (XX)	30	36	65.0	65.0
		36	36	65.0	65.0
		42	36	55.7	55.7
	38 1/2 (X) 74 (XX)	30	36	65.0	65.0
		36	36	65.0	65.0
		42	36	55.7	55.7
83 3/4	31 1/2 (X) 60 (XX)	30	36	65.0	65.0
		36	36	65.0	65.0
	38 1/2 (X) 74 (XX)	30	36	65.0	65.0
		36	36	65.0	65.0
95 3/4	31 1/2 (X) 60 (XX)	30	36	65.0	65.0
		36	36	65.0	65.0
	38 1/2 (X) 74 (XX)	30	36	65.0	65.0
		36	36	65.0	65.0

AUTHORITY HAVING JURISDICTION TO VERIFY EGRESS REQUIREMENTS.

GLAZING OPTIONS:
INSUL. LAMINATED GLASS TYPE 'E'

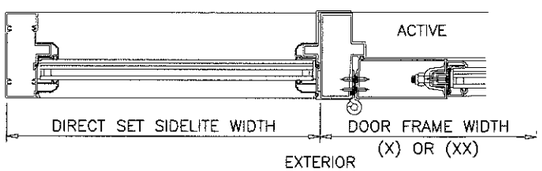

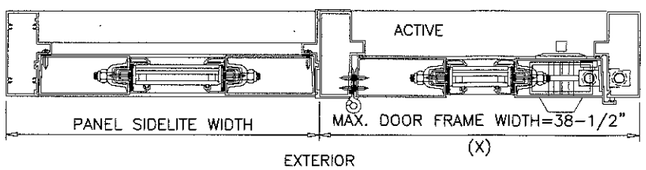

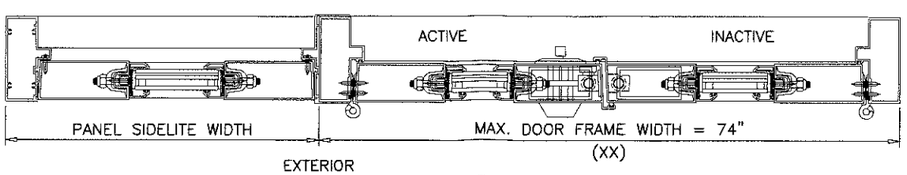

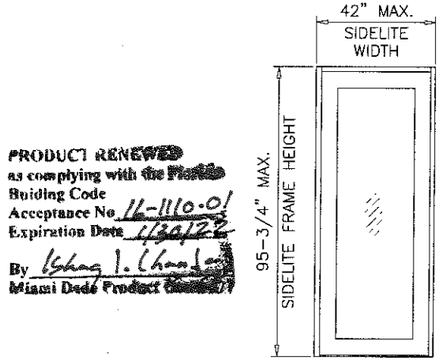

(O)

PRODUCT RENEWED
as complying with the Florida
Building Code
Acceptance No. 11-1110.01
Expiration Date 1/30/22
By Ishaq I. Chanda
Miami Dade Product Control

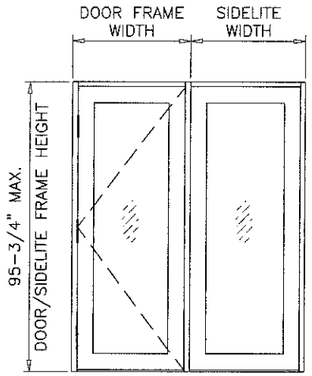

(XO)
(OX)

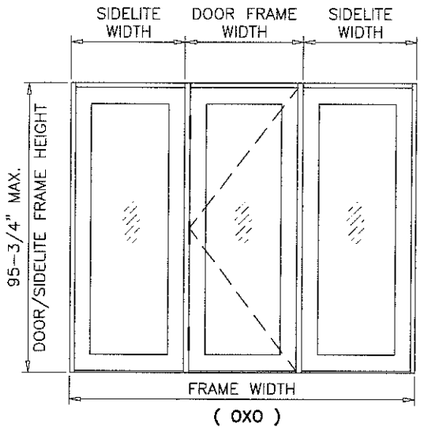

(OXO)

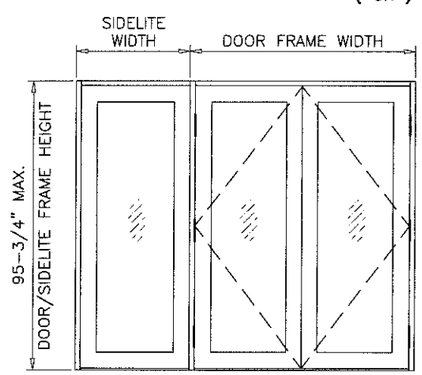

(OXX)
(XXO)

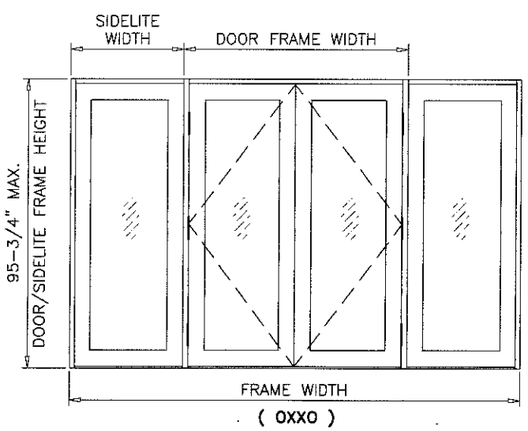

(OXXO)

PRODUCT REVISED
as complying with the Florida
Building Code
Acceptance No. 15-0615.01
Expiration Date 1/30/17
Ishaq I. Chanda
Miami Dade Product Control

JAVAD AHMAD
LICENSE
No. 70592
STATE OF FLORIDA
PROFESSIONAL ENGINEER

MAY 06 2016

AL-FAROOQ CORPORATION
ENGINEERS & PRODUCT DEVELOPMENT
9360 SUNSET DRIVE, SUITE 220
MIAMI, FLORIDA 33173 (C.A.N. 3538)
TEL. (305) 264-8100 FAX. (305) 262-6978

COMP-ANL\W01-64AWP

SERIES 1800 ALUM OUTSWING DOOR W/ SIDELITES (L.M.I.)

AWP WINDOWS AND DOORS, LLC
8130 N.W. 74TH AVE.
MEDLEY, FL. 33166
TEL. (305) 887-2646 FAX (305) 883-1309

revisions:			
no	date	by	description
J	03.25.16		INSUL. GLASS OPTION ADDED
K	05.06.16		REV. PER RER COMMENTS

date: 09-17-01
scale: 3/8" = 1"
dr. by: TARIQ
chk. by:

drawing no.
W01–64

sheet 4.1 of 15

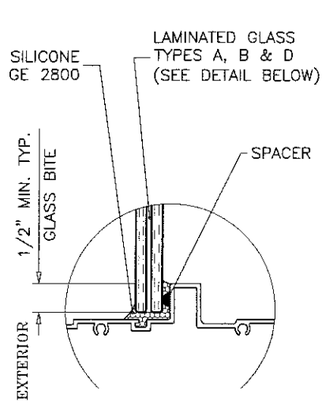

GLAZING DETAIL AT
DIRECT SET SIDELITE

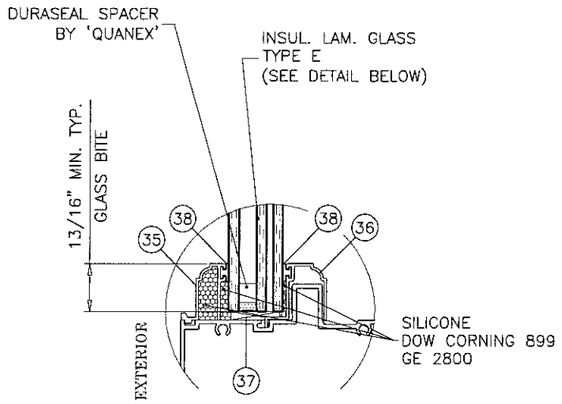

GLAZING DETAIL AT
DIRECT SET SIDELITE

HINGES:

EXTRUDED 1/8" THK AND 7-1/2" LONG TWO-PART ALUMINUM BUTT HINGE (PART No. YH-650), THREE PER LEAF, 11-1/2" FROM LEAF TOP AND BOTTOM TO HINGE'S CENTER LINE AND ONE AT MIDSPAN.

LOCK OPTIONS:

OPTION #1

ACTIVE LEAF:

STANDARD LOCK SET AND CYLINDER DEAD BOLT LATCH (FOR PRE-FABRICATED LOCK STILE PART No. YE-802, WITH 2-1/8" BORE AND 2-3/8" BACKSET TO FIT STANDARD LOCK SET), KEY OPERATED ON THE EXTERIOR AND THUMB TURN ON THE INTERIOR AT EACH ACTIVE LEAF .

ACTIVE/INACTIVE LEAF:

MANUFACTURER'S MANUALLY OPERATED CONCEALED ZINC DIE-CAST FLUSH BOLT ASSEMBLY WITH STEEL EXTENSION ROD, ALUMINUM FLUSH BOLT GUIDE, STAINLESS STEEL FLUSH BOLT ADJUSTMENT PLATE AND PROTECTIVE MOLDED PLASTIC BOX FOR FLUSHBOLT AT THRESHOLD, AT 10-1/2" FROM TOP & BOTTOM OF ACTIVE & INACTIVE LEAFS.

OPTION #2

ACTIVE LEAF:

MANUFACTURER'S STEEL THREE POINT LOCK MECHANISM ALTERNATE TO STANDARD LOCK SET AT ACTIVE LEAF (FOR PRE-FABRICATED LOCK STILE PART No. YE-837) WITH THROW BOLTS CONNECTED TO MORTISE LOCK SET, ENGAGING INTO FRAME HEAD AND SILL AND KEY OPERATED ON THE EXTERIOR AND THUMB TURN ON THE INTERIOR

INACTIVE LEAF:

MANUFACTURER'S MANUALLY OPERATED CONCEALED ZINC DIE-CAST FLUSH BOLT ASSEMBLY WITH STEEL EXTENSION ROD, ALUMINUM FLUSH BOLT GUIDE, STAINLESS STEEL FLUSH BOLT ADJUSTMENT PLATE AND PROTECTIVE MOLDED PLASTIC BOX FOR FLUSHBOLT AT THRESHOLD, AT 10-1/2" FROM TOP & BOTTOM OF INACTIVE LEAF.

NOTE:
TOP AND BOTTOM FLUSH BOLTS MUST BE ENGAGED DURING PERIODS OF HURRICANE WARNING.

PRODUCT RENEWED
as complying with the Florida
Building Code
Acceptance No. 16-1110.01
Expiration Date 1/30/22
By Ishaq I. Chaudhry
Miami Dade Product Control

PRODUCT REVISED
as complying with the Florida
Building Code
Acceptance No. 15-0615.01
Expiration Date 1/30/17
By Ishaq I. Chaudhry
Miami Dade Product Control

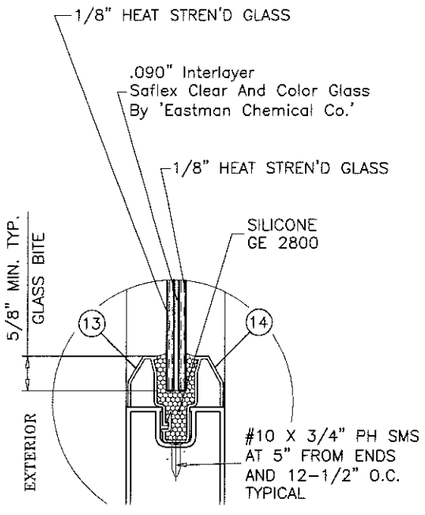

GLASS TYPE 'A'

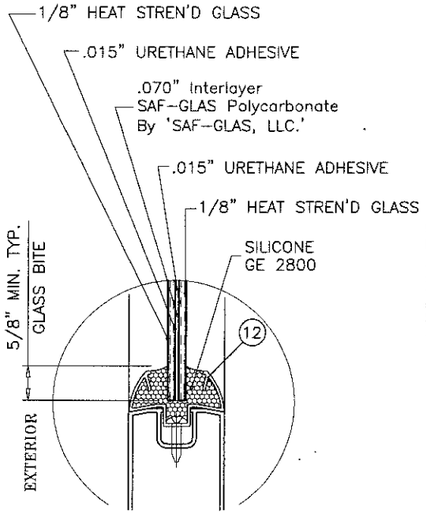

GLASS TYPE 'B'

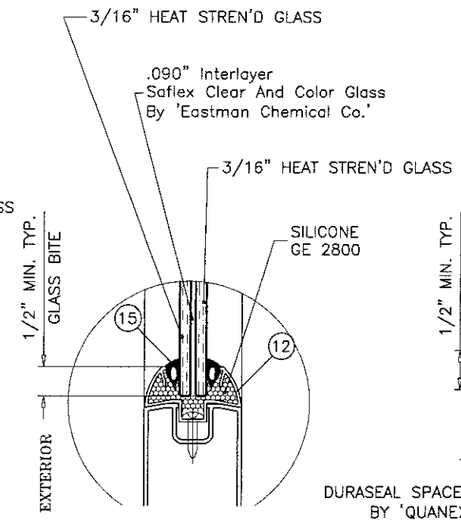

GLASS TYPE 'D'

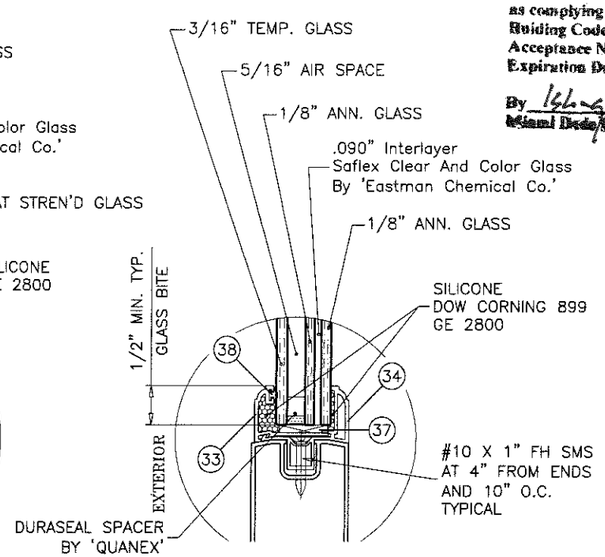

GLASS TYPE 'E'
13/16" OVERALL INSUL. LAM. GLASS

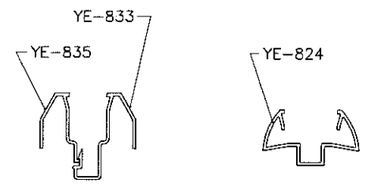

GLAZING ADAPTER OPTIONS

DOOR/PANEL/SIDELITE GLAZING OPTIONS

JAVAD AHMAD
LICENSE
No. 70592
STATE OF
FLORIDA
PROFESSIONAL ENGINEER

OCT 06 2

AL-FAROOQ CORPORATION
ENGINEERS & PRODUCT DEVELOPMENT
9360 SUNSET DRIVE, SUITE 220
MIAMI, FLORIDA 33173 (C.A.N. 3538)
TEL. (305) 264-8100 FAX. (305) 262-6978

COMP-ANL\W01-64AWP

SERIES 1800 ALUM OUTSWING DOOR W/ SIDELITES (L.M.I.)

AWP WINDOWS AND DOORS, LLC
8130 N.W. 74TH AVE.
MEDLEY, FL. 33166
TEL. (305) 887-2646 FAX (305) 883-1309

revisions:			
no	date	by	description
G	11.22.10		REV. PER BCCO COMMENTS
H	08.15.11		UPDATED FOR 2010 FBC
I	05.15.15		UPDATED FOR 2014 FBC
J	03.25.16		INSUL. GLASS OPTION ADDED
K	05.06.16		REV. PER RER COMMENTS

date: 09-17-01
scale: 3/8" = 1"
dr. by: TARIQ
chk. by:

drawing no.
W01-64

sheet 5 of 15

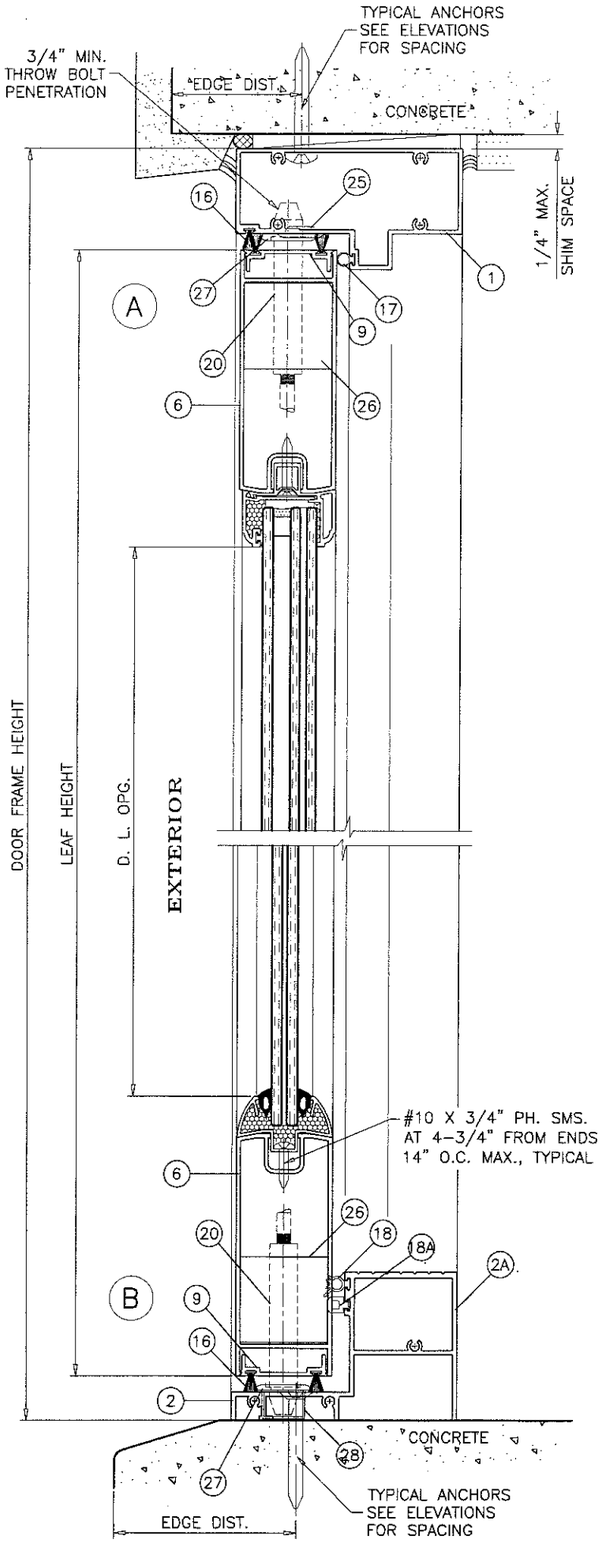

OUTSWING OPERATING UNITS

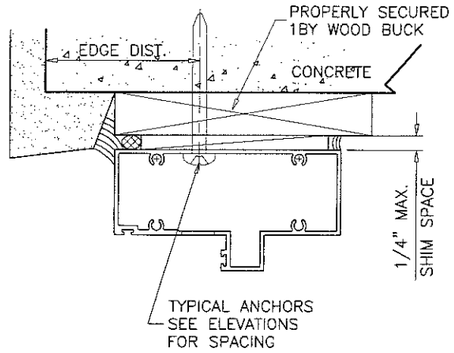

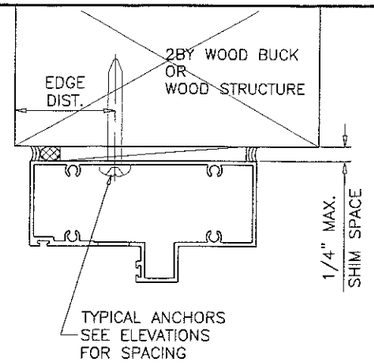

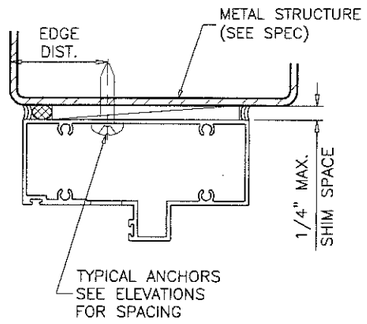

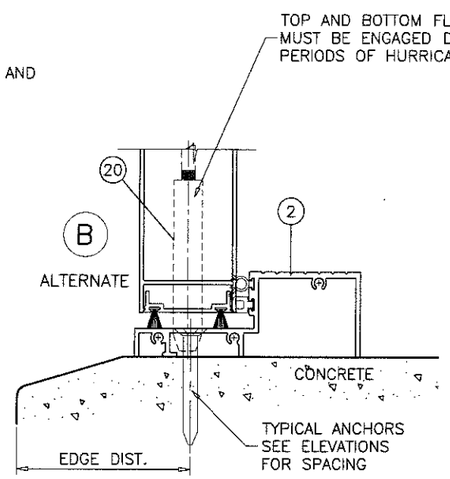

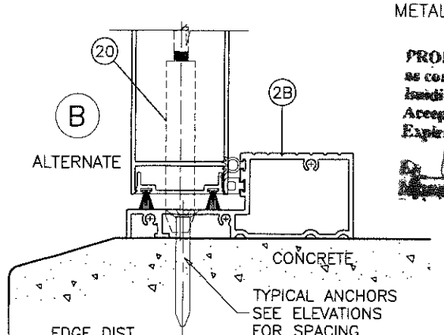

PRODUCT RENEWED as complying with the Florida Building Code Acceptance No 16-1110.01 Expiration Date 1/31/22 By Miami Dade Product Control

WOOD BUCKS AND METAL STRUCTURE NOT BY AWP MUST SUSTAIN LOADS IMPOSED BY GLAZING SYSTEM AND TRANSFER THEM TO THE BUILDING STRUCTURE.

TYPICAL ANCHORS: SEE ELEV. FOR SPACING

1/4" DIA. ULTRACON BY 'ELCO' (Fu=177 KSI, Fy=155 KSI)

INTO 2BY WOOD BUCKS OR WOOD STRUCTURES
1-1/2" MIN. PENETRATION INTO WOOD (HEAD/JAMBS)

THRU 1BY BUCKS INTO CONC. OR MASONRY
1-1/4" MIN. EMBED INTO CONCRETE (HEAD)
1-1/4" MIN. EMBED INTO MASONRY (JAMBS)

DIRECTLY INTO CONC. OR MASONRY
1-3/4" MIN. EMBED INTO CONCRETE (HEAD/SILL)
1-1/4" MIN. EMBED INTO CONCRETE (JAMBS)
1-1/4" MIN. EMBED INTO MASONRY (JAMBS)

#14 SMS OR SELF DRILLING SCREWS (GRADE 2 CRS)

INTO MIAMI-DADE COUNTY APPROVED MULLIONS (HEAD/JAMBS)
ALUMINUM : 1/8" THK. MIN. (6063-T5 MIN.) (NO SHIM SPACE)

INTO METAL STRUCTURES (HEAD/JAMBS)
STEEL : 1/8" THK. MIN. (Fy = 36 KSI MIN.)
(STEEL IN CONTACT WITH ALUMINUM TO BE PLATED OR PAINTED)

TYPICAL EDGE DISTANCE

INTO CONCRETE AND MASONRY = 2-1/2" MIN.
INTO WOOD STRUCTURE = 1" MIN.
INTO METAL STRUCTURE = 3/4" MIN.

WOOD AT HEAD OR JAMBS SG = 0.55 MIN.
CONCRETE AT HEAD, SILL OR JAMBS f'c = 3000 PSI MIN.
C-90 HOLLOW/FILLED BLOCK AT JAMBS f'm = 2000 PSI MIN.

SEALANTS:

FRAME AND LEAF CORNERS, INSTALLATION SCREWS AT SILL AND ALL METAL PARTS CONNECTIONS SEALED WITH CLEAR COLORED SILICONE.

PRODUCT REVISED as complying with the Florida Building Code Acceptance No 15-0615.01 Expiration Date 1/31/17 By Miami Dade Product Control

JAVAD AHMAD LICENSE No. 70592 STATE OF FLORIDA PROFESSIONAL ENGINEER

MAY 06 2016

AL-FAROOQ CORPORATION
ENGINEERS & PRODUCT DEVELOPMENT
9360 SUNSET DRIVE, SUITE 220
MIAMI, FLORIDA 33173 (C.A.N. 3538)
TEL. (305) 264-8100 FAX. (305) 262-6978

COMP-ANL\W01-64AWP

SERIES 1800 ALUM OUTSWING DOOR W/ SIDELITES (L.M.I.)

AWP WINDOWS AND DOORS, LLC
8130 N.W. 74TH AVE.
MEDLEY, FL. 33166
TEL. (305) 887-2646 FAX (305) 883-1309

revisions:

no	date	by	description
G	11.22.10		REV. PER BCCO COMMENTS
H	08.15.11		UPDATED FOR 2010 FBC
I	05.15.15		UPDATED FOR 2014 FBC
J	03.25.16		INSUL. GLASS OPTION ADDED
K	05.06.16		REV. PER RER COMMENTS

date: 09-17-01
scale: 3/8" = 1"
dr. by: TARIQ
chk. by:

drawing no. W01-64

sheet 6 of 15

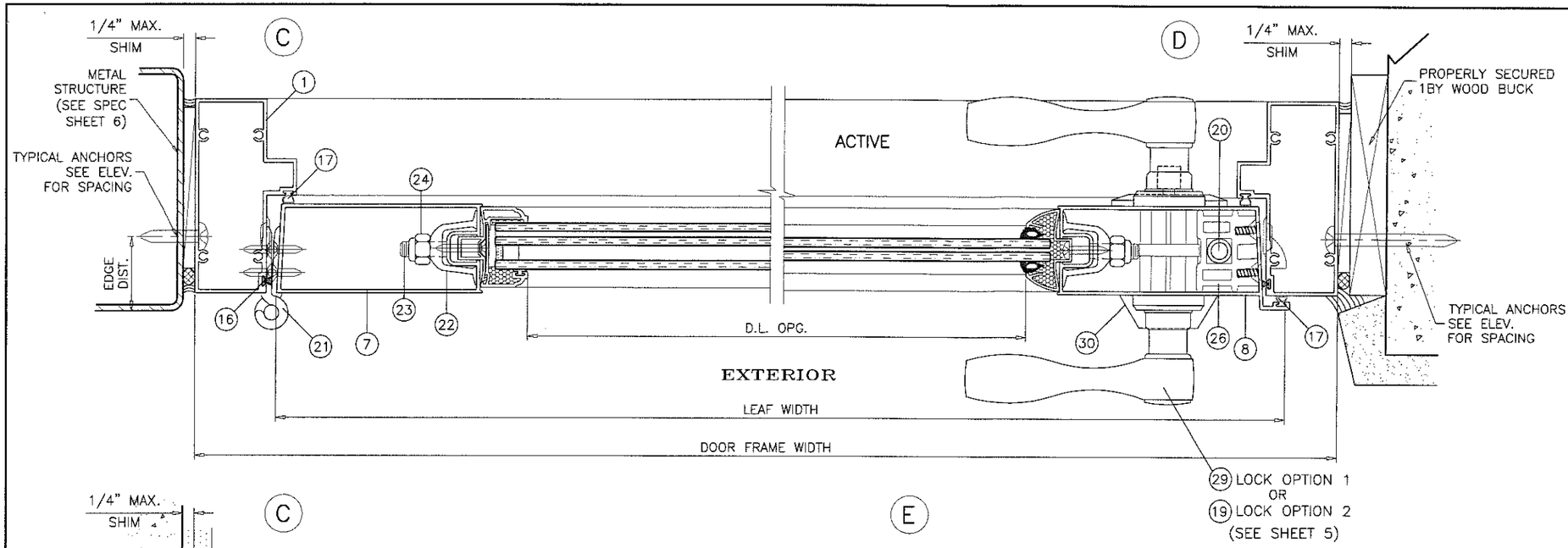

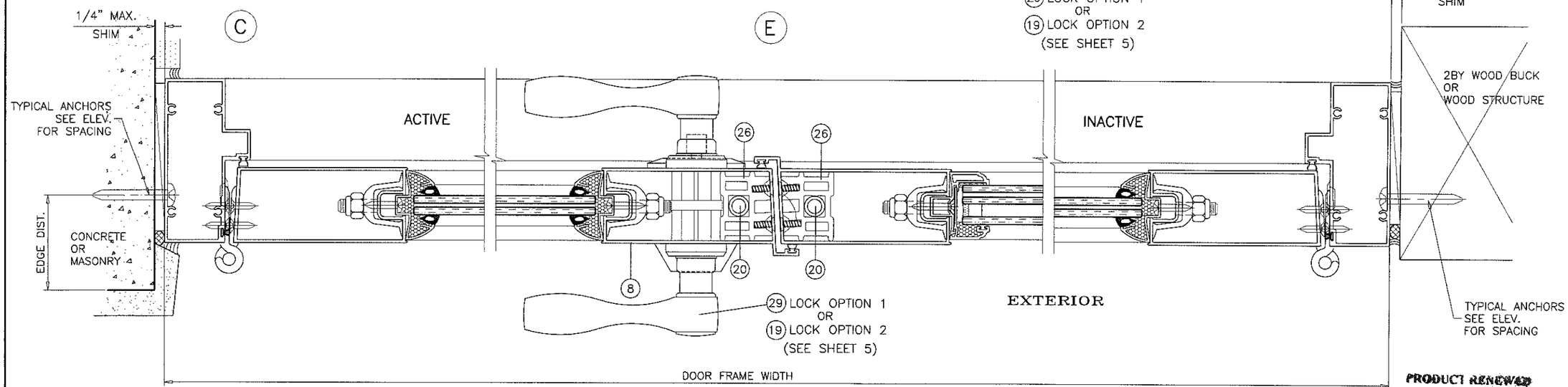

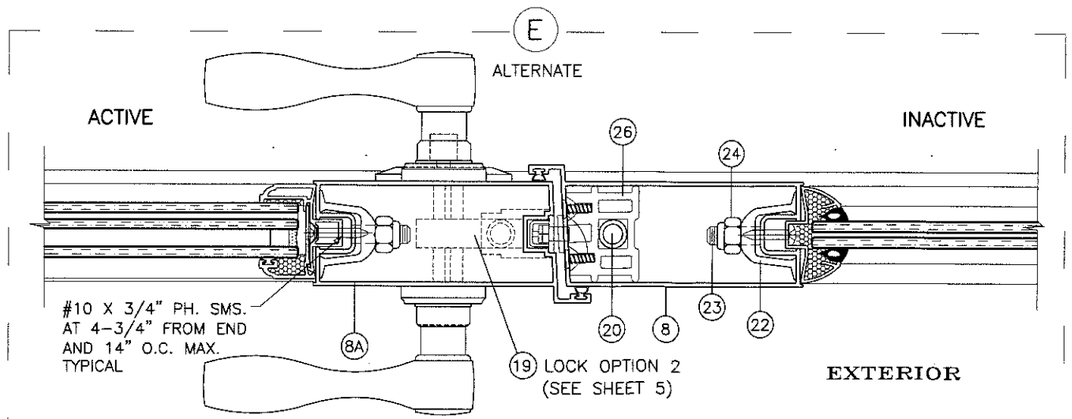

3 POINT LOCK ON ACTIVE LEAF OPTION

OUTSWING OPERATING UNITS

PRODUCT REVISED
as complying with the Florida Building Code
Acceptance No. 15-0615.01
Expiration Date 1/30/17
By
Miami Dade Product Control

PRODUCT RENEWED
as complying with the Florida Building Code
Acceptance No. 16-1110.01
Expiration Date 1/30/22
By
Miami Dade Product Control

JAWAD AHMAD LICENSE No. 70592 STATE OF FLORIDA PROFESSIONAL ENGINEER

AL-FAROOQ CORPORATION
ENGINEERS & PRODUCT DEVELOPMENT
9360 SUNSET DRIVE, SUITE 220
MIAMI, FLORIDA 33173 (C.A.N. 3538)
TEL. (305) 264-8100 FAX. (305) 262-6978

COMP-ANL\W01-64AWP

SERIES 1800 ALUM OUTSWING DOOR W/ SIDELITES (L.M.I.)

AWP WINDOWS AND DOORS, LLC
8130 N.W. 74TH AVE.
MEDLEY, FL. 33166
TEL. (305) 887-2646 FAX (305) 883-1309

revisions:			
no.	date	by	description
G	11.22.10		REV. PER BCCO COMMENTS
H	08.15.11		UPDATED FOR 2010 FBC
I	05.15.15		UPDATED FOR 2014 FBC
J	03.25.16		INSUL. GLASS OPTION ADDED
K	05.06.16		REV. PER RER COMMENTS

date: 09-17-01
scale: 3/8" = 1"
dr. by: TARIQ
chk. by:

drawing no. W01-64

sheet 7 of 15

PANEL SIDELITE INSTALLATION DETAILS

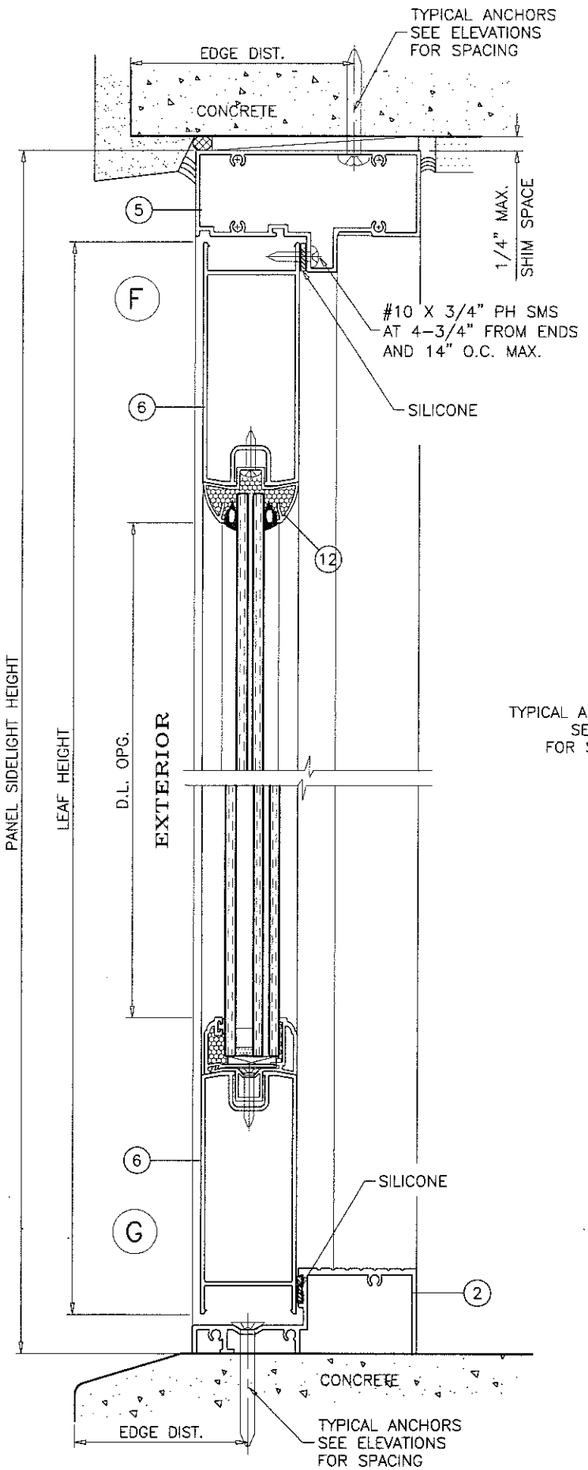

PANEL SIDELITE UNITS

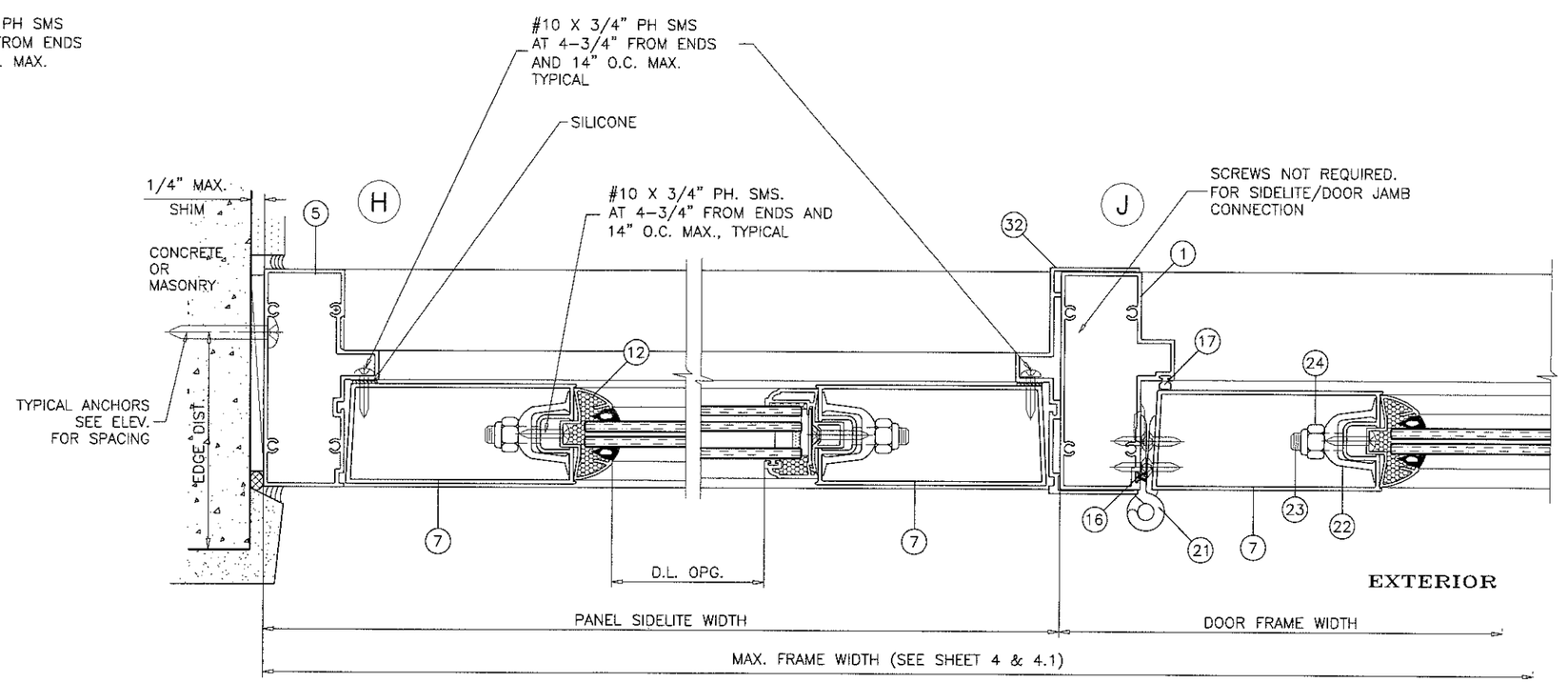

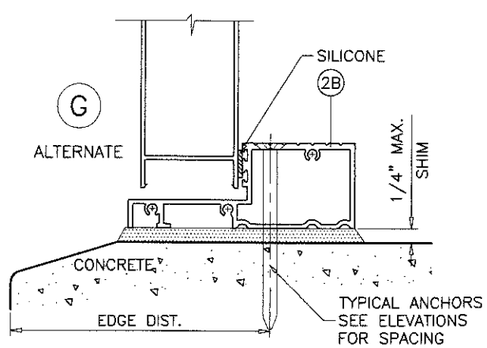

PRODUCT REVISED
as complying with the Florida Building Code
Acceptance No 15-0615.01
Expiration Date 7/30/17
By Ishaq I. Chanda
Miami Dade Product Control

PRODUCT RENEWED
as complying with the Florida Building Code
Acceptance No 16-1110.01
Expiration Date 1/30/22
By Ishaq I. Chanda
Miami Dade Product Control

MAY 06 2022

JAWAD AHMAD LICENSE No. 70592 STATE OF FLORIDA PROFESSIONAL ENGINEER

AL-FAROOQ CORPORATION
ENGINEERS & PRODUCT DEVELOPMENT
9360 SUNSET DRIVE, SUITE 220 (C.A.N. 3538)
MIAMI, FLORIDA 33173 FAX. (305) 262-6978
TEL. (305) 264-8100

COMP-ANL\W01-64AWP

SERIES 1800 ALUM OUTSWING DOOR W/ SIDELITES (L.M.I.)

AWP WINDOWS AND DOORS, LLC
8130 N.W. 74TH AVE.
MEDLEY, FL. 33166
TEL. (305) 887-2646 FAX (305) 883-1309

revisions:			
no	date	by	description
G	11.22.10		REV. PER BCCO COMMENTS
H	08.15.11		UPDATED FOR 2010 FBC
I	05.15.15		UPDATED FOR 2014 FBC
J	03.25.16		INSUL. GLASS OPTION ADDED
K	05.06.16		REV. PER RER COMMENTS

date: 09-17-01
scale: 3/8" = 1"
dr. by: TARIQ
chk. by:

drawing no. W01-64

DIRECT SET SIDELITE INSTALLATION DETAILS

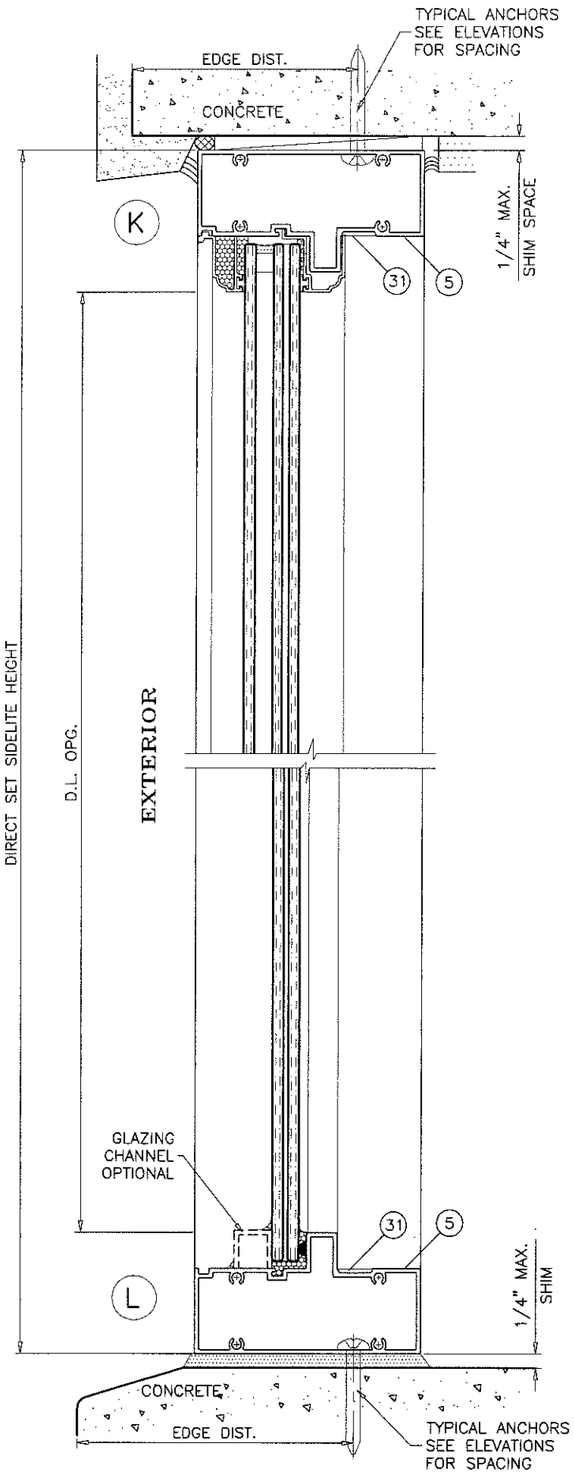

DIRECT SET SIDELITE UNITS

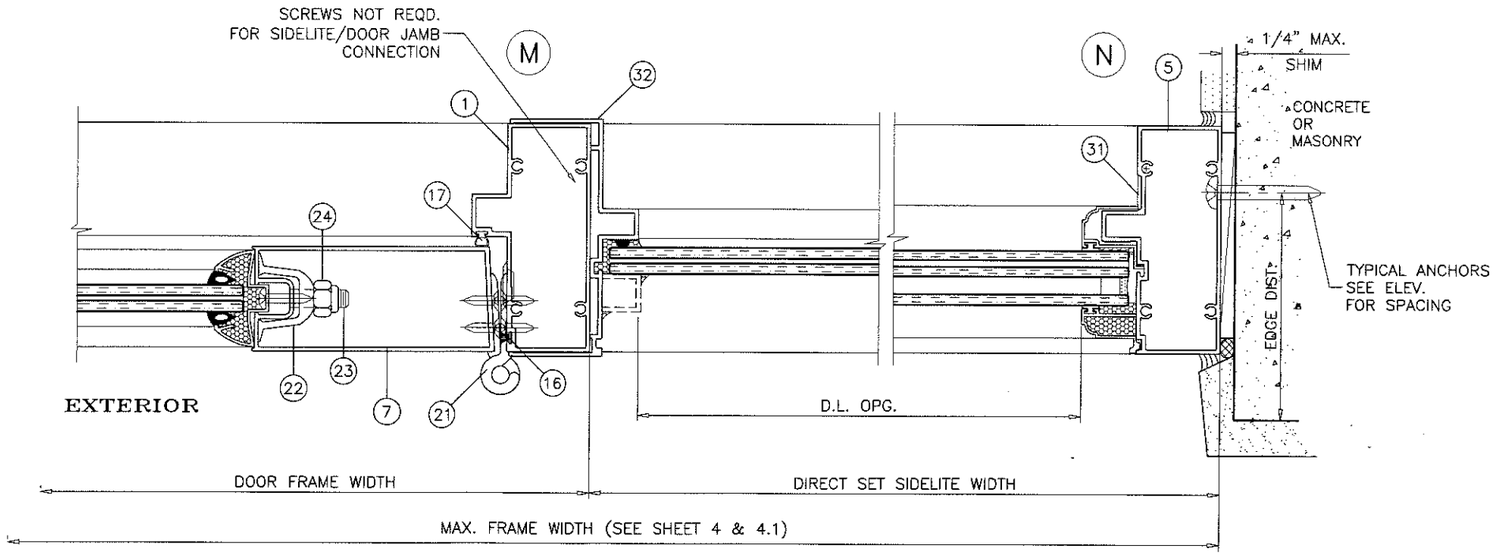

PRODUCT RENEWED
as complying with the Florida
Building Code
Acceptance No. 16-1110.01
Expiration Date 11/30/22
By [signature]
Miami-Dade Product Control

PRODUCT REVISED
as complying with the Florida
Building Code
Acceptance No. 15-0615.01
Expiration Date 11/30/17
By [signature]
Miami-Dade Product Control

JAVAD AHMAD
LICENSE
No. 70592
STATE OF
FLORIDA
PROFESSIONAL ENGINEER

AL-FAROOQ CORPORATION
ENGINEERS & PRODUCT DEVELOPMENT
9360 SUNSET DRIVE, SUITE 220
MIAMI, FLORIDA 33173 (C.A.N. 3538)
TEL. (305) 264-8100 FAX. (305) 262-6978

COMP-ANL\W01-64AWP

SERIES 1800 ALUM OUTSWING DOOR W/ SIDELITES (I.M.I.)

AWP WINDOWS AND DOORS, LLC
8130 N.W. 74TH AVE.
MEDLEY, FL. 33166
TEL. (305) 887-2646 FAX (305) 883-1309

revisions:			
no	date	by	description
G	11.22.10		REV. PER BCCO COMMENTS
H	08.15.11		UPDATED FOR 2010 FBC
I	05.15.15		UPDATED FOR 2014 FBC
J	03.25.16		INSUL. GLASS OPTION ADDED
K	05.06.16		REV. PER RER COMMENTS

date: 09-17-01
scale: 3/8" = 1"
dr. by: TARIQ
chk. by:

drawing no.
W01-64

sheet 9 of 15

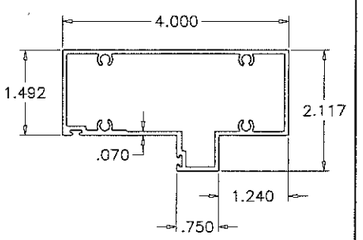

(1) DOOR FRAME HEAD

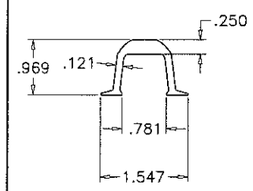

(22) PRESSURE PLATE

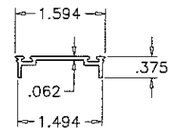

(9) SNAP CAP

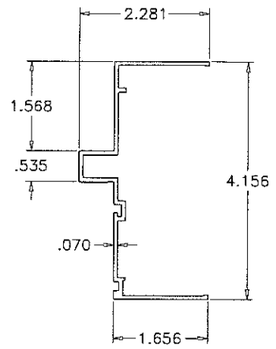

(32) SIDELITE FRAME MULLION

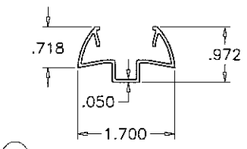

(12) GLAZING CHANNEL

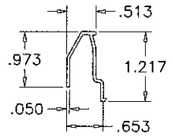

(13) EXT. GLAZING LEG

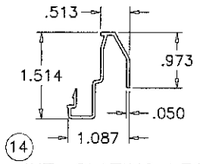

(14) INT. GLAZING LEG

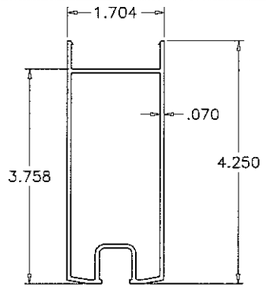

(6) TOP/BOTTOM RAIL

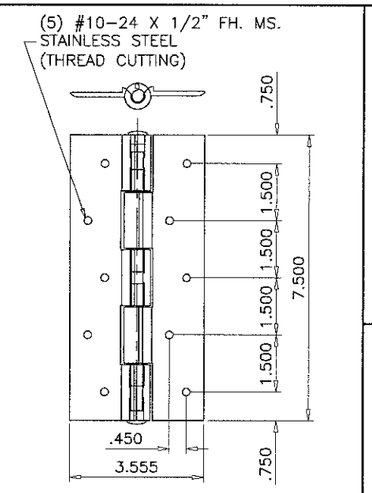

(21) HINGE ASSEMBLY

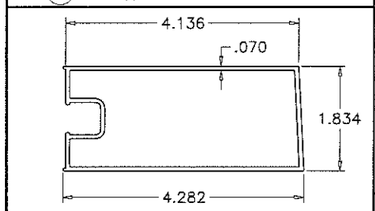

(7) HINGE STILE

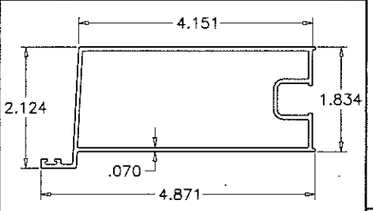

(8) LOCK STILE

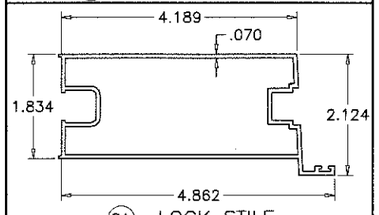

(8A) LOCK STILE
(FOR 3 POINT LOCK OPTION)

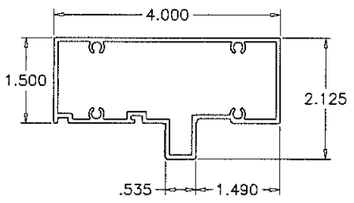

(5) SIDELITE FRAME

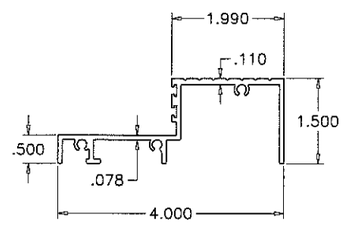

(2) STD. THRESHOLD

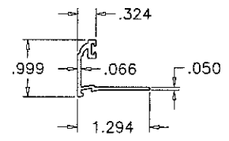

(33) GLAZING BEAD EXTERIOR
INSUL. LAM. GLASS

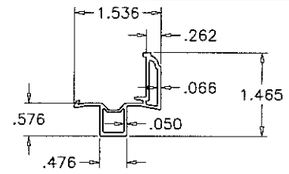

(34) GLAZING CHANNEL INTERIOR
INSUL. LAM. GLASS

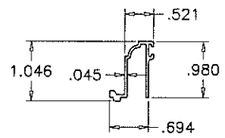

(35) SIDELITE GLAZING INSERT EXTERIOR
INSUL. LAM. GLASS

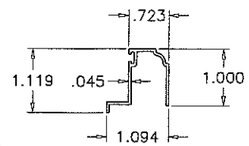

(36) SIDELITE GLAZING INSERT INTERIOR
INSUL. LAM. GLASS

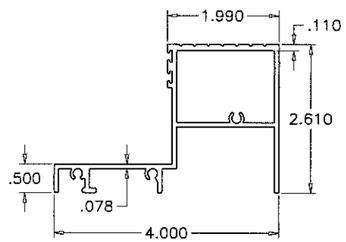

(2A) HI-RISETHRESHOLD

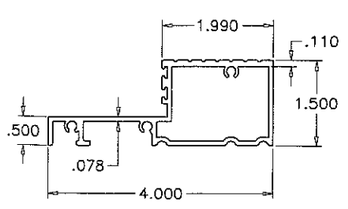

(2B) OPTIONAL THRESHOLD

PRODUCT RENEWED
as complying with the Florida Building Code
Acceptance No 16-1110.01
Expiration Date 1/30/22
By Ishaq I. Chanda
Miami-Dade Product Control

PRODUCT REVISED
as complying with the Florida Building Code
Acceptance No 15-0615.01
Expiration Date 1/30/17
By Ishaq I. Chanda
Miami-Dade Product Control

JAVAD AHMAD
LICENSE
No. 70592
STATE OF FLORIDA
PROFESSIONAL ENGINEER

MAY 06 20

AL-FAROOQ CORPORATION
ENGINEERS & PRODUCT DEVELOPMENT
9360 SUNSET DRIVE, SUITE 220
MIAMI, FLORIDA 33173 (C.A.N. 3538)
TEL. (305) 264-8100 FAX. (305) 262-6978
COMP-ANL\W01-64AWP

SERIES 1800 ALUM OUTSWING DOOR W/ SIDELITES (L.M.I.)

AWP WINDOWS AND DOORS, LLC
8130 N.W. 74TH AVE.
MEDLEY, FL. 33166
TEL. (305) 887-2646 FAX (305) 883-1309

revisions:			
no	date	by	description
G	11.22.10		REV. PER BCCO COMMENTS
H	08.15.11		UPDATED FOR 2010 FBC
I	05.15.15		UPDATED FOR 2014 FBC
J	03.25.16		INSUL. GLASS OPTION ADDED
K	05.06.16		REV. PER RER COMMENTS

date: 09-17-01
scale: 3/8" = 1"
dr. by: TARIQ
chk. by:

drawing no.
W01-64

sheet 10 of 15

ITEM #	PART #	REQD.	DESCRIPTION	MATERIAL	MANF./SUPPLIER/REMARKS
1	YE-832	1	DOOR FRAME HEAD/JAMB	6063-T6	–
2	YE-810	1	STD. THRESHOLD	6063-T6	–
2A	YE-1820	1	HI-RISE THRESHOLD	6063-T6	–
2B	YE-840	1	OPTIONAL THRESHOLD	6063-T6	–
5	YH-809	AS REQD.	SIDELITE FRAME	6063-T6	–
6	YE-801	2/ LEAF	DOOR LEAF TOP AND BOTTOM RAIL	6063-T6	–
7	YE-803	1	DOOR LEAF JAMB - HINGE SIDE	6063-T5	–
8	YE-802	1	DOOR LEAF - LOCK SIDE	6063-T5	–
8A	YE-837	1	DOOR LEAF - LOCK SIDE (3 POINT LOCK)	6063-T5	–
9	YE-806	2/ LEAF	SNAP CAP FOR DOOR LEAF & SILL	6063-T5	–
10	YE-816	AS REQD.	COVER PLATE	6063-T5	–
12	YE-824	4/ LEAF	GLAZING CHANNEL	6063-T6	–
13	YE-835	AS REQD.	EXTERIOR GLAZING LEG	6063-T5	–
14	YE-833	AS REQD.	INTERIOR GLAZING LEG	6063-T5	–
15	YH-623	AS REQD.	GLAZING GASKET	VINYL	DUROMETER 75±5 SHORE A
16	YH-602	AS REQD.	WOOL FIN WEATHERSTRIPPING (.187 X .260)	–	ULTRAFAB
17	YH-622	AS REQD.	BULB WEATHERSTRIPPING (.198 X .260)	VINYL	DUROMETER 75±5 SHORE A
18	YE-849	AS REQD.	SILL WEATHERSTRIPPING	POLYPROPYLENE	–
18A	YE-850	AS REQD.	SILL WEATHERSTRIPPING	VINYL	–
19	GU	1/ACTIVE LEAF	3 POINT LOCK MECHANISM (OPTIONAL)	S. STEEL	–
20	YH-610	AS REQD.	FLUSH BOLT ASSY. SERIES 1202	ZINC	DIECAST
21	YH-650	3/ LEAF	BUTT HINGES, AT 11-1/2" FROM ENDS & MIDSPAN	ALUMINUM	WITH SS PIN
22	YE-805	4/ LEAF	PRESSURE PLATE-TIE ROD	6063-T5	2-1/2" LONG
23	YH-630	2/ LEAF	3/8" DIA. THREADED ROD	STEEL	–
24	YH-618	2/ LEAF	3/8"-16 HEX FLANGE NUT	STEEL	–
25	YH-641	AS REQD.	INSTALLATION SCREW HOLE CAP	PLASTIC	–
26	YE-842	2/ LEAF	FLUSH BOLT GUIDE, 1-1/2" LONG	6063-T6	–
27	YH-656	2/ LEAF	FLUSH BOLT ADJUSTMENT PLATE	S. STEEL	–
28	YH-681	1	PROTECTIVE BOX	NYLON	–
29	YH-616	1	LOCK SET ASSEMBLY	–	LEVER OR KNOB TYPES
30	YH-617	1	DEADBOLT ASSEMBLY	–	–
31	YH-816	AS REQD.	INSTALLATION SCREW COVER STRIP	6063-T6	–
32	YH-808	AS REQD.	SIDELITE FRAME MULLION	6063-T6	–
33	YE-847	AS REQD.	GLAZING BEAD EXTERIOR	6063-T6	–
34	YE-848	AS REQD.	GLAZING BEAD INTERIOR	6063-T6	–
35	YE-845	AS REQD.	SIDELITE GLAZING INSERT EXTERIOR	6063-T6	–
36	YE-846	AS REQD.	SIDELITE GLAZING INSERT INTERIOR	6063-T6	–
37	–	AS REQD.	SETTING BLOCK	EPDM	DUROMETER 80±5 SHORE A
38	YH-1622	AS REQD.	GLAZING GASKET	VINYL	DUROMETER 70±5 SHORE A

PRODUCT RENEWED
as complying with the Florida
Building Code
Acceptance No. 16-1110.01
Expiration Date 4/30/22
By Ishaq I. Chanda
Miami Dade Product Control

PRODUCT REVISED
as complying with the Florida
Building Code
Acceptance No. 15-0615.01
Expiration Date 11/30/17
By Ishaq I. Chanda
Miami Dade Product Control

JAVAD AHMAD
LICENSE
No. 70592
STATE OF
FLORIDA
PROFESSIONAL ENGINEER

MAY 06 2016

AL-FAROOQ CORPORATION
ENGINEERS & PRODUCT DEVELOPMENT
9360 SUNSET DRIVE, SUITE 220
MIAMI, FLORIDA 33173 (C.A.N. 3538)
TEL. (305) 264-8100 FAX. (305) 262-6978

COMP-ANL\W01-64AWP

SERIES 1800 ALUM OUTSWING DOOR W/ SIDELITES (L.M.I.)

AWP WINDOWS AND DOORS, LLC
8130 N.W. 74TH AVE.
MEDLEY, FL. 33166
TEL. (305) 887-2646 FAX (305) 883-1309

revisions:			
no	date	by	description
J	03.25.16		INSUL. GLASS OPTION ADDED
K	05.06.16		REV. PER RER COMMENTS

date: 09-17-01
scale: 3/8" = 1"
dr. by: TARIQ
chk. by:

drawing no.
W01-64

sheet 10.1 of 15

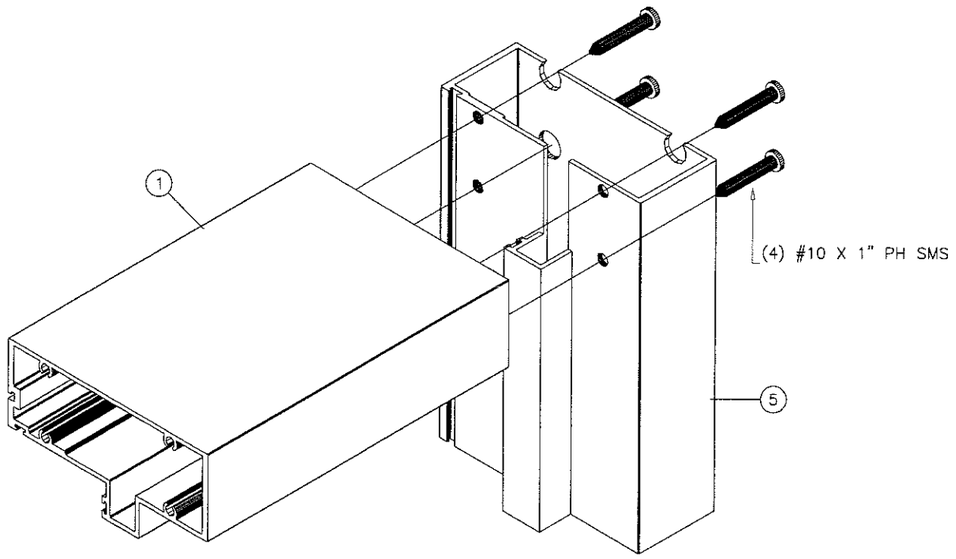

FRAME UPPER CORNER

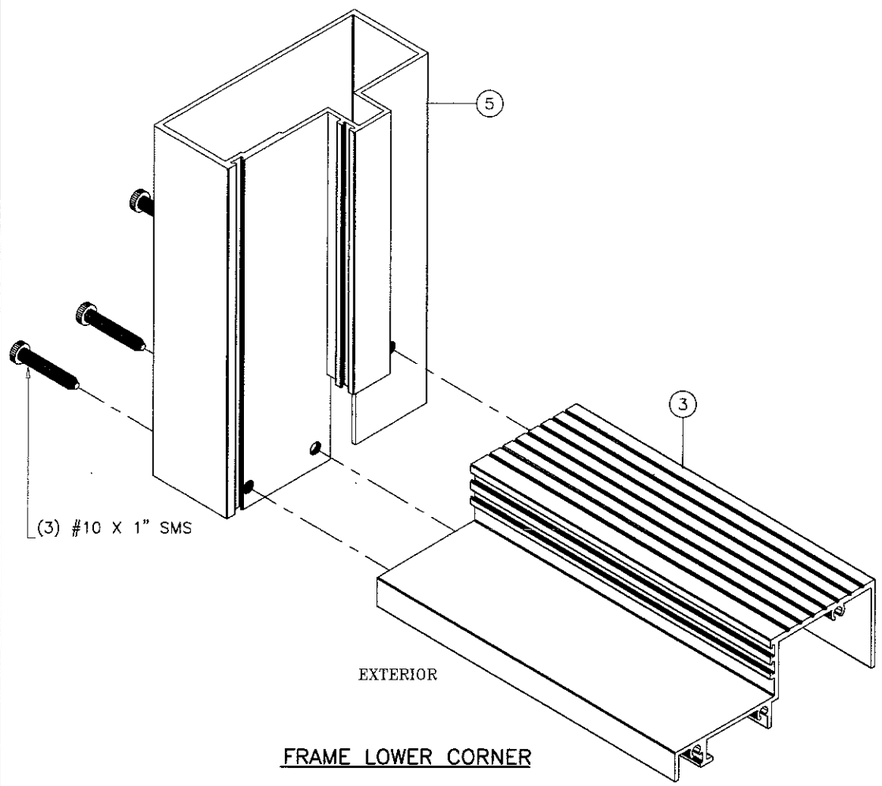

FRAME LOWER CORNER

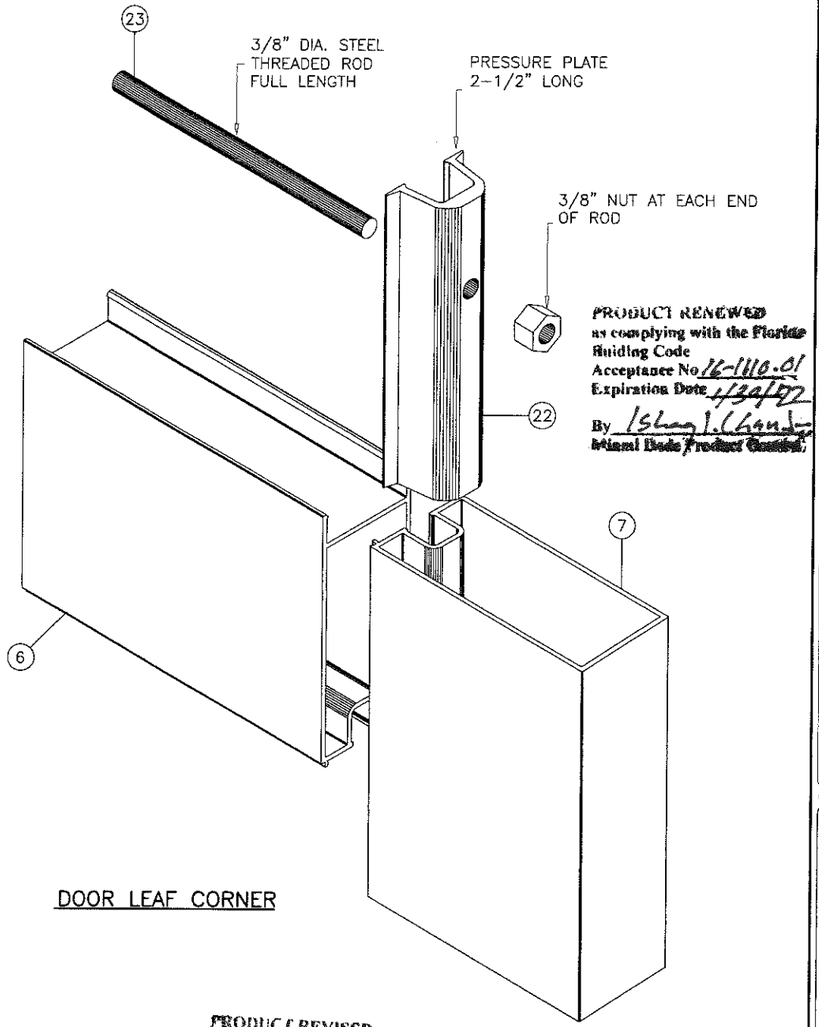

DOOR LEAF CORNER

PRODUCT RENEWED
as complying with the Florida Building Code
Acceptance No. 16-1116.01
Expiration Date 1/31/17
By Ishaq I. Chanda
Miami Dade Product Control

PRODUCT REVISED
as complying with the Florida Building Code
Acceptance No. 15-0615.01
Expiration Date 1/30/17
By Ishaq I. Chanda
Miami Dade Product Control

AL-FAROOQ CORPORATION
ENGINEERS & PRODUCT DEVELOPMENT
9360 SUNSET DRIVE, SUITE 220
MIAMI, FLORIDA 33173 (C.A.N. 3538)
TEL. (305) 264-8100 FAX. (305) 262-6978

COMP-ANL\W01-64AWP

SERIES 1800 ALUM OUTSWING DOOR W/ SIDELITES (L.M.I.)

AWP WINDOWS AND DOORS, LLC
8130 N.W. 74TH AVE.
MEDLEY, FL. 33166
TEL. (305) 887-2646 FAX (305) 883-1309

revisions:

no	date	by	description
G	11.22.10		REV. PER BCCO COMMENTS
H	08.15.11		UPDATED FOR 2010 FBC
I	05.15.15		UPDATED FOR 2014 FBC
J	03.25.16		INSUL. GLASS OPTION ADDED
K	05.06.16		REV. PER RER COMMENTS

date: 09-17-01
scale: 3/8" = 1"
dr. by: TARIQ
chk. by:

drawing no.
W01-64

sheet 11 of 15

JAVAD AHMAD
LICENSE
No. 70592
STATE OF FLORIDA
PROFESSIONAL ENGINEER

FLUSH BOLT GUIDE AND ADJUSTMENT PLATE ASSEMBLY

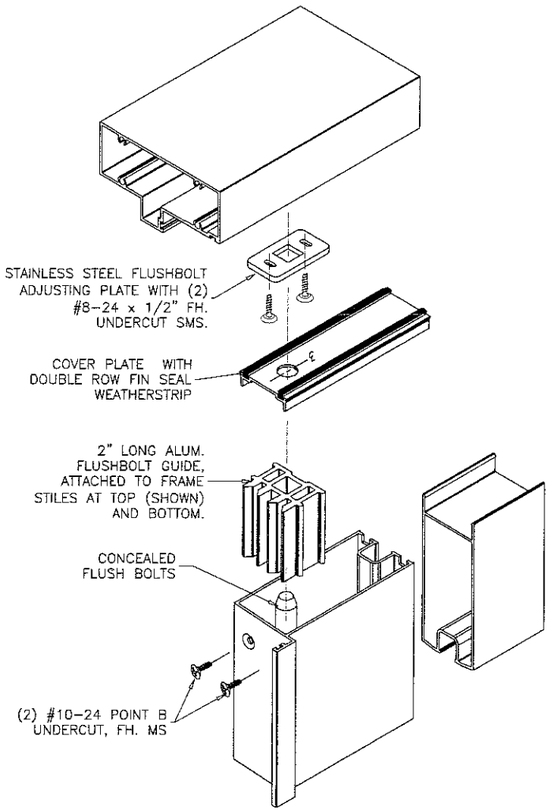

TOP FLUSHBOLT ASSEMBLY

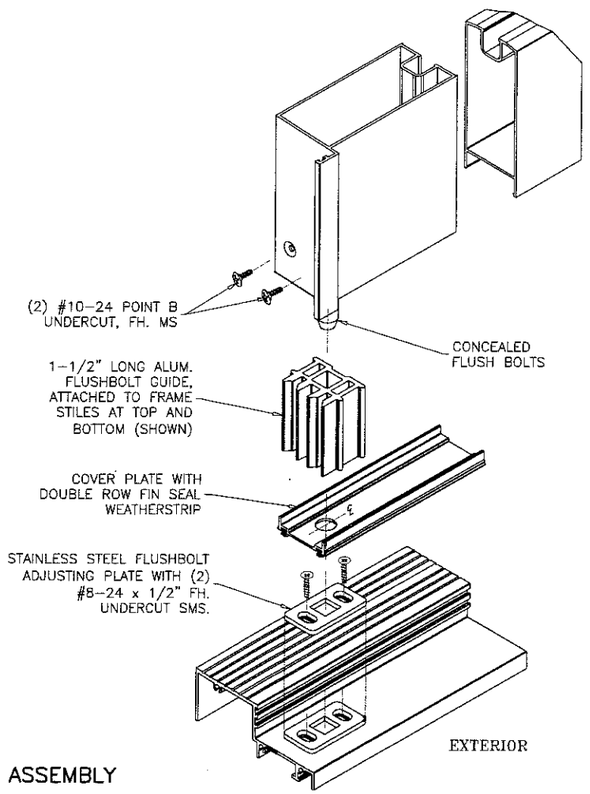

BOTTOM FLUSHBOLT ASSEMBLY

PRODUCT RENEWED
as complying with the Florida
Building Code
Acceptance No 16-1110.01
Expiration Date 11/30/22
By
Miami-Dade Product Control

PRODUCT REVISED
as complying with the Florida
Building Code
Acceptance No 15-0615.01
Expiration Date 11/30/17
By
Miami-Dade Product Control

JAVAD AHMAD
LICENSE
No. 70592
STATE OF FLORIDA
PROFESSIONAL ENGINEER

DEC 06 2016

AL-FAROOQ CORPORATION
ENGINEERS & PRODUCT DEVELOPMENT
9360 SUNSET DRIVE, SUITE 220 (C.A.N. 3538)
MIAMI, FLORIDA 33173
TEL. (305) 264-8100 FAX. (305) 262-6978

COMP-ANL\W01-64AWP

SERIES 1800 ALUM OUTSWING DOOR W/ SIDELITES (L.M.I.)

AWP WINDOWS AND DOORS, LLC
8130 N.W. 74TH AVE.
MEDLEY, FL. 33166
TEL. (305) 887-2646 FAX (305) 883-1309

revisions:			
no	date	by	description
G	11.22.10		REV. PER BCCO COMMENTS
H	08.15.11		UPDATED FOR 2010 FBC
I	05.15.15		UPDATED FOR 2014 FBC
J	03.25.16		INSUL. GLASS OPTION ADDED
K	05.06.16		REV. PER RER COMMENTS

date: 09-17-01
scale: 3/8" = 1"
dr. by: TARIQ
chk. by:

drawing no.
W01-64

sheet 12 of 15

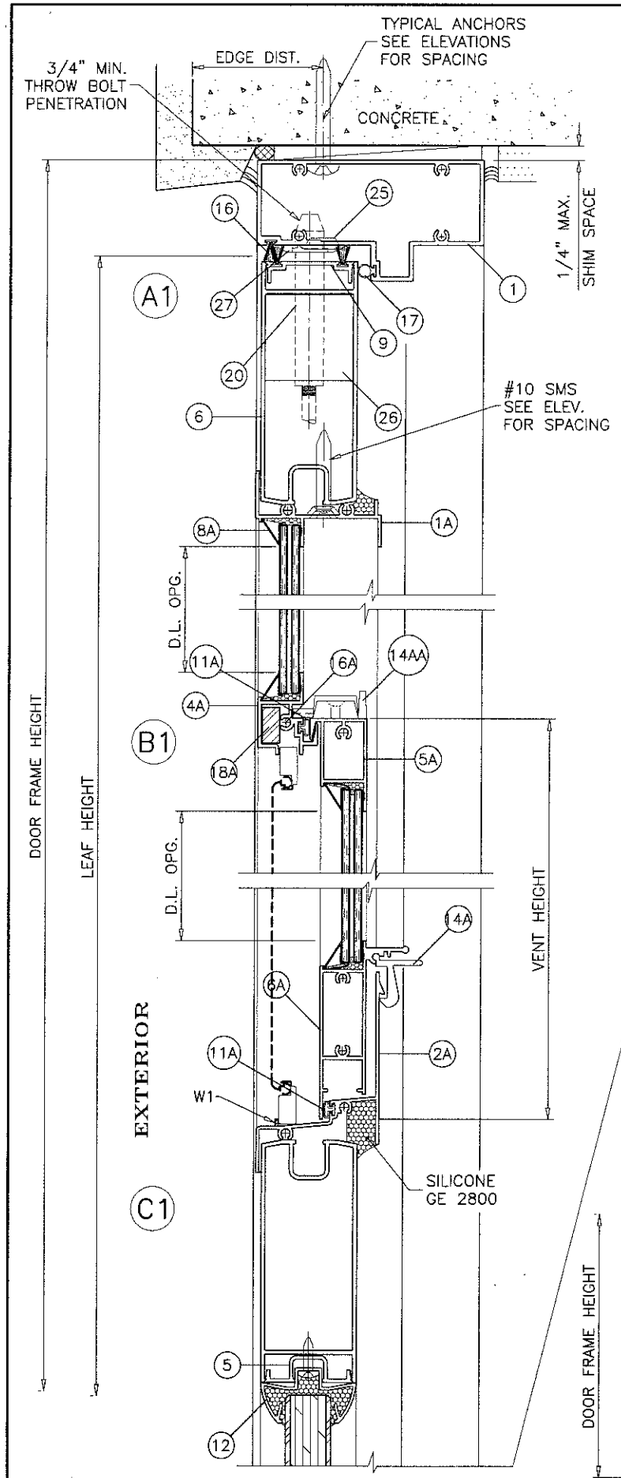

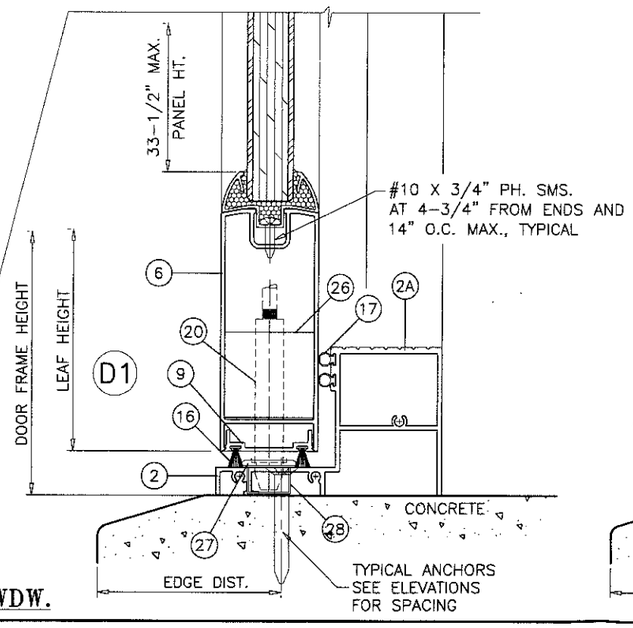

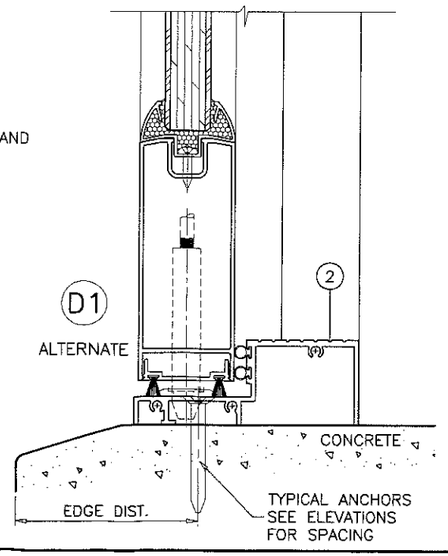

SINGLE (X) OPERATING UNITS W/ S.H. WDW.

PRODUCT RENEWED
as complying with the Florida
Building Code
Acceptance No 16-1110.01
Expiration Date 1/30/22
By Ishaq I. Chanda
Miami-Dade Product Control

WEEPHOLES:

W1 = 1" LONG WEEP NOTCH AT EACH END

PRODUCT REVISED
as complying with the Florida
Building Code
Acceptance No 15-0615.01
Expiration Date 1/30/17
By Ishaq I. Chanda
Miami-Dade Product Control

JAVAD AHMAD
LICENSE
No. 70592
STATE OF
FLORIDA
PROFESSIONAL ENGINEER

DEC 06 2016

AL-FAROOQ CORPORATION
ENGINEERS & PRODUCT DEVELOPMENT
9360 SUNSET DRIVE, SUITE 220
MIAMI, FLORIDA 33173 (C.A.N. 3538)
TEL. (305) 264-8100 FAX. (305) 262-6978

COMP-ANL\W01-64AWP

SERIES 1800 ALUM OUTSWING DOOR W/ SIDELITES (L.M.I.)

AWP WINDOWS AND DOORS, LLC
8130 N.W. 74TH AVE.
MEDLEY, FL. 33166
TEL. (305) 887-2646 FAX (305) 883-1309

revisions:

no	date	by	description
G	11.22.10		REV. PER BCCO COMMENTS
H	08.15.11		UPDATED FOR 2010 FBC
I	05.15.15		UPDATED FOR 2014 FBC
J	03.25.16		INSUL. GLASS OPTION ADDED
K	05.06.16		REV. PER RER COMMENTS

date: 09-17-01
scale: 3/8" = 1"
dr. by: TARIQ
chk. by:

drawing no.
W01-64

sheet 13 of 15

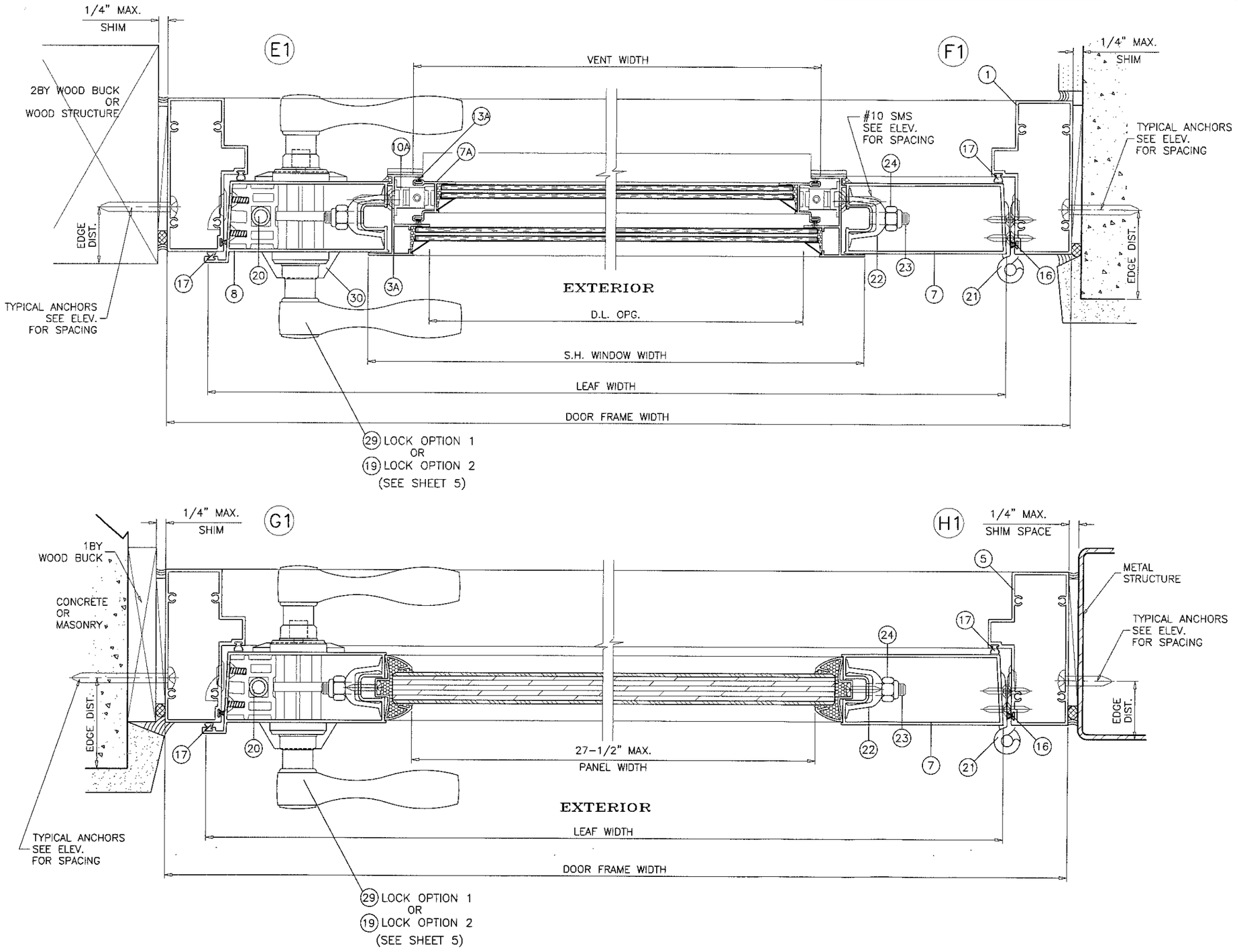

PRODUCT RENEWED
as complying with the Florida Building Code
Acceptance No. 16-1110.01
Expiration Date 1/30/22
By Ishaq I. Chaudhry
Miami-Dade Product Control

PRODUCT REVISED
as complying with the Florida Building Code
Acceptance No. 15-0615.01
Expiration Date 1/30/17
By Ishaq I. Chaudhry
Miami-Dade Product Control

JAVAD AHMAD
LICENSE
No. 70592
STATE OF FLORIDA
PROFESSIONAL ENGINEER

AL-FAROOQ CORPORATION
ENGINEERS & PRODUCT DEVELOPMENT
9360 SUNSET DRIVE, SUITE 220
MIAMI, FLORIDA 33173 (C.A.N. 3538)
TEL. (305) 264-8100 FAX. (305) 262-6978

COMP-ANL\W01-64AWP

SERIES 1800 ALUM OUTSWING DOOR W/ SIDELITES (L.M.I.)

AWP WINDOWS AND DOORS, LLC
8130 N.W. 74TH AVE.
MEDLEY, FL. 33166
TEL. (305) 887-2646 FAX (305) 883-1309

revisions:			
no	date	by	description
G	11.22.10		REV. PER BCCO COMMENTS
H	08.15.11		UPDATED FOR 2010 FBC
I	05.15.15		UPDATED FOR 2014 FBC
J	03.25.16		INSUL. GLASS OPTION ADDED
K	05.06.16		REV. PER RER COMMENTS

date: 09-17-01
scale: 3/8" = 1"
dr. by: TARIQ
chk. by:

drawing no.
W01-64

sheet 14 of 15

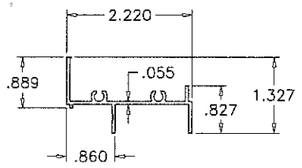

(1A) FRAME HEAD

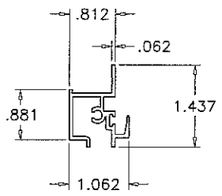

(4A) FIXED RAIL

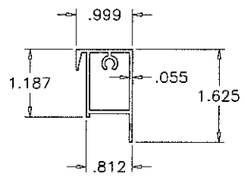

(5A) VENT TOP RAIL

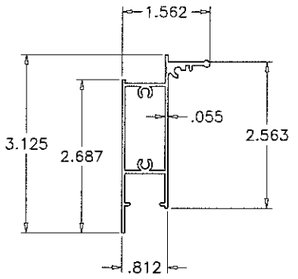

(6A) VENT BOTTOM RAIL

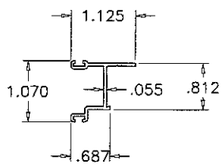

(7A) VENT SIDE RAIL

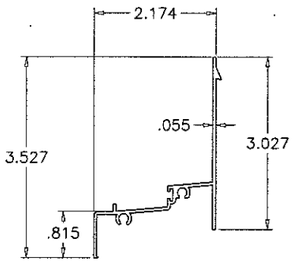

(2A) FRAME SILL

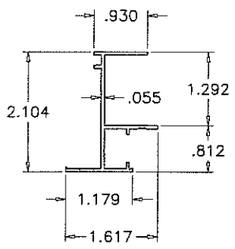

(3A) FRAME JAMB

ITEM #	PART #	REQD.	DESCRIPTION	MATERIAL	MANF./SUPPLIER/REMARKS
1A	YE-169	1	FRAME HEAD	6063-T5	–
2A	YE-167	1	FRAME SILL	6063-T5	–
3A	YE-102	2	FRAME JAMB	6063-T5	–
4A	YE-152	1	FIXED RAIL	6063-T5	–
5A	YE-151	1	VENT TOP RAIL	6063-T5	–
6A	YE-168	1	VENT BOTTOM RAIL	6063-T5	–
7A	YE-92	2	VENT JAMB	6063-T5	–
8A	YB-4	AS REQD.	GLAZING BEAD	ALUMINUM	ROLL FORMED
10A	–	2/ VENT	BLOCK & TACKLE BALANCE	–	–
11A	YH-622	AS REQD.	BULB VINYL – SINGLE ROW	PVC	DUROMETER 75 SHORE A
13A	YH-509F	AS REQD.	PILE-SCHLEGEL .187 X .250	–	FIN SEAL (DOUBLE)
14A	YH-504	2/ VENT	VENT LATCHES	NYLON/CELCON	AT 11" FROM ENDS
14AA	YH-515	2/ VENT	CAM LOCKS	ZAMAK	AT 11" FROM ENDS
15A	#10 X 3/4"	8	FRAME ASSEMBLY SCREWS	CRS	PLATED, PH SMS
16A	#8 X 1"	2	FIXED RAIL SCREWS	CRS	CAD PLATED, PH SMS
17A	#8 X 1-1/4"	4/ VENT	VENT ASSEMBLY SCREWS	CRS	CAD PLATED, PH SMS
18A	YH-590	1	REINFORCING BAR (.625 X .312")	STEEL	–

AWP SINGLE HUNG WINDOW INSERT FOR SINGLE (X) DOOR (SHEET 3)

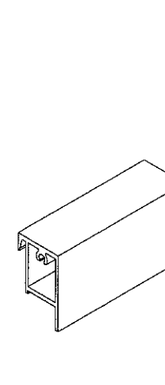

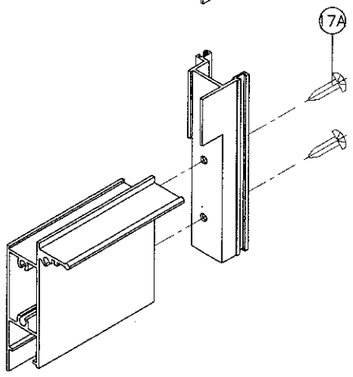

S.H. VENT CORNER DETAIL

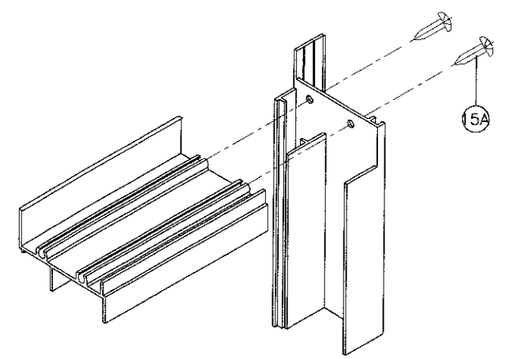

3/4" WEEP NOTCH AT EACH END OF SCREEN RETAINING LEG

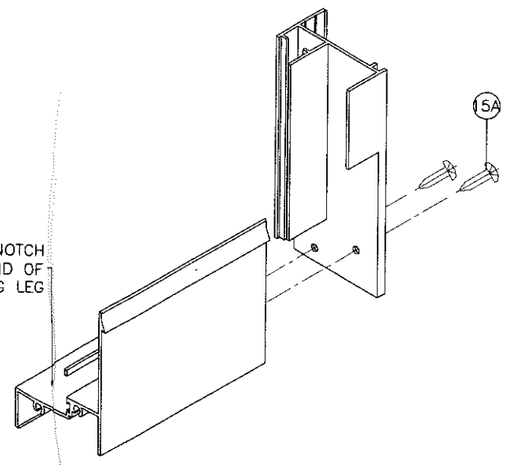

S.H. FRAME CORNER DETAIL

PRODUCT RENEWAL
as complying with the Florida Building Code
Acceptance No. 16-1110.01
Expiration Date JAN 30, 2022
By [signature]
Miami-Dade Product Control

PRODUCT REVISED
as complying with the Florida Building Code
Acceptance No. 16-0615.01
Expiration Date JAN 30, 2017
By [signature]
Miami-Dade Product Control

JAVAD AHMAD LICENSE No. 70592 STATE OF FLORIDA PROFESSIONAL ENGINEER

MAY 06 2015

AL-FAROOQ CORPORATION
ENGINEERS & PRODUCT DEVELOPMENT
9360 SUNSET DRIVE, SUITE 220
MIAMI, FLORIDA 33173 (C.A.N. 3598)
TEL. (305) 264-8100 FAX. (305) 262-6978

COMP-ANL\W01-64AWP

SERIES 1800 ALUM OUTSWING DOOR W/ SIDELITES (L.M.I.)

AWP WINDOWS AND DOORS, LLC
8130 N.W. 74TH AVE.
MEDLEY, FL. 33166
TEL. (305) 887-2646 FAX (305) 883-1309

revisions:

no	date	by	description
G	11.22.10		REV. PER BCCO COMMENTS
H	08.15.11		UPDATED FOR 2010 FBC
I	05.15.15		UPDATED FOR 2014 FBC
J	03.25.16		INSUL. GLASS OPTION ADDED
K	05.06.16		REV. PER RER COMMENTS

date: 09-17-01
scale: 3/8" = 1"
dr. by: TARIQ
chk. by:

drawing no.
W01-64

sheet 15 of 15