MIAMI-DADE COUNTY
PRODUCT CONTROL SECTION
11805 SW 26 Street, Room 208
Miami, Florida 33175-2474
T (786) 315-2590 F (786) 315-2599
www.miamidade.gov/economy

DEPARTMENT OF REGULATORY AND ECONOMIC RESOURCES (RER)
BOARD AND CODE ADMINISTRATION DIVISION

NOTICE OF ACCEPTANCE (NOA)

Signature Hardware, LLC
211 Endeavor
Rogersville, Missouri 65742

SCOPE:

This NOA is being issued under the applicable rules and regulations governing the use of construction materials. The documentation submitted has been reviewed and accepted by Miami-Dade County RER -Product Control Section to be used in Miami Dade County and other areas where allowed by the Authority Having Jurisdiction (AHJ).

This NOA shall not be valid after the expiration date stated below. The Miami-Dade County Product Control Section (In Miami Dade County) and/or the AHJ (in areas other than Miami Dade County) reserve the right to have this product or material tested for quality assurance purposes. If this product or material fails to perform in the accepted manner, the manufacturer will incur the expense of such testing and the AHJ may immediately revoke, modify, or suspend the use of such product or material within their jurisdiction. RER reserves the right to revoke this acceptance, if it is determined by Miami-Dade County Product Control Section that this product or material fails to meet the requirements of the applicable building code.

This product is approved as described herein, and has been designed to comply with the Florida Building Code, including the High Velocity Hurricane Zone.

DESCRIPTION: Series "Design Hardware 1000 & 2000" Panic Rim Exit Device-Component Approval

APPROVAL DOCUMENT: Drawing No "**MDI007**" (former **AD11-10**), titled "Design Hardware Series 1000 & 2000 Rim Exit Device", sheets 1 through 3 of 3, prepared by Building Drops, Inc., dated 01-11-17, signed and sealed by Hermes F. Norero, P.E., bearing the Miami-Dade County Product Control Revision stamp with the Notice of Acceptance number and expiration date by the Miami-Dade County Product Control Section.

MISSILE IMPACT RATING: Large and Small Missile Impact Resistant

Limitations:

1. The Panic Exit Device component approval are to be used as an alternate in the single Outswing steel doors (36"W X 84"H max panel), having current NOA. Lower design of door or the panic component shall control.
2. Electrical device installation is not part of this approval, such installation to be reviewed by AHJ.

LABELING: Each unit shall bear a permanent label with the manufacturer's name or logo, **New Taipei city, Taiwan** and series and following statement: "Miami-Dade County Product Control Approved", noted herein.

RENEWAL of this NOA shall be considered after a renewal application has been filed and there has been no change in the applicable building code negatively affecting the performance of this product.

TERMINATION of this NOA will occur after the expiration date or if there has been a revision or change in the materials, use, and/or manufacture of the product or process. Misuse of this NOA as an endorsement of any product, for sales, advertising or any other purposes shall automatically terminate this NOA. Failure to comply with any section of this NOA shall be cause for termination and removal of NOA.

ADVERTISEMENT: The NOA number preceded by the words Miami-Dade County, Florida, and followed by the expiration date may be displayed in advertising literature. If any portion of the NOA is displayed, then it shall be done in its entirety.

INSPECTION: A copy of this entire NOA shall be provided to the user by the manufacturer or its distributors and shall be available for inspection at the job site at the request of the Building Official.

This NOA **revises & renews NOA # 11-0414.11** and consists of this page 1 and evidence pages E-1 & E-2, as well as approval document mentioned above.

The submitted documentation was reviewed by **Ishaq I. Chanda, P.E.**

MIAMI-DADE COUNTY APPROVED

3/11/17

NOTICE OF ACCEPTANCE: EVIDENCE SUBMITTED

F. STATEMENTS (continue)

5. Certificate of Organization issued by State of Missouri to Signature Hardware, LLC dated June 7th, 2001, signed by Matt Blunt, Secretary of State.
6. Certificate of Fictitious Registration dated 1/5/2006 in the state of Missouri, under Design Hardware issued to Signature Hardware, LLC.
7. Distributor agreement dated July 22, 2011 between Signature Hardware dba Design Hardware, USA and Design Hardware Asia, Taiwan dated July 25, 2011, signed by Johannes Lopez and Chang Lu Chiu-Lan, respectively on behalf of their company.
8. Statement of lab compliance, as part of test reports & marked-up Dwgs referenced above.

G. OTHER

1. This NOA **revises & renews NOA # 11-0414.11,** expiring 09/22/21.
2. Design Hardware Panic devices & Lockwood mullion brochures / catalogs supplied by the Vision Hollow Metal Limited per NOA # 10-0623.02.

Ishaq I. Chanda

Ishaq I. Chanda, P.E.
Product Control Examiner
NOA No. 16-1116.03
Expiration Date: September 22, 2021
Approval Date: March 09, 2017

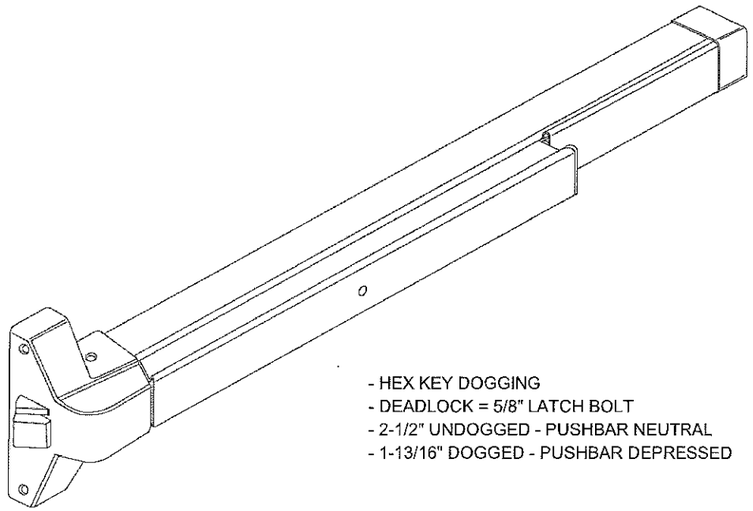

- HEX KEY DOGGING
- DEADLOCK = 5/8" LATCH BOLT
- 2-1/2" UNDOGGED - PUSHBAR NEUTRAL
- 1-13/16" DOGGED - PUSHBAR DEPRESSED

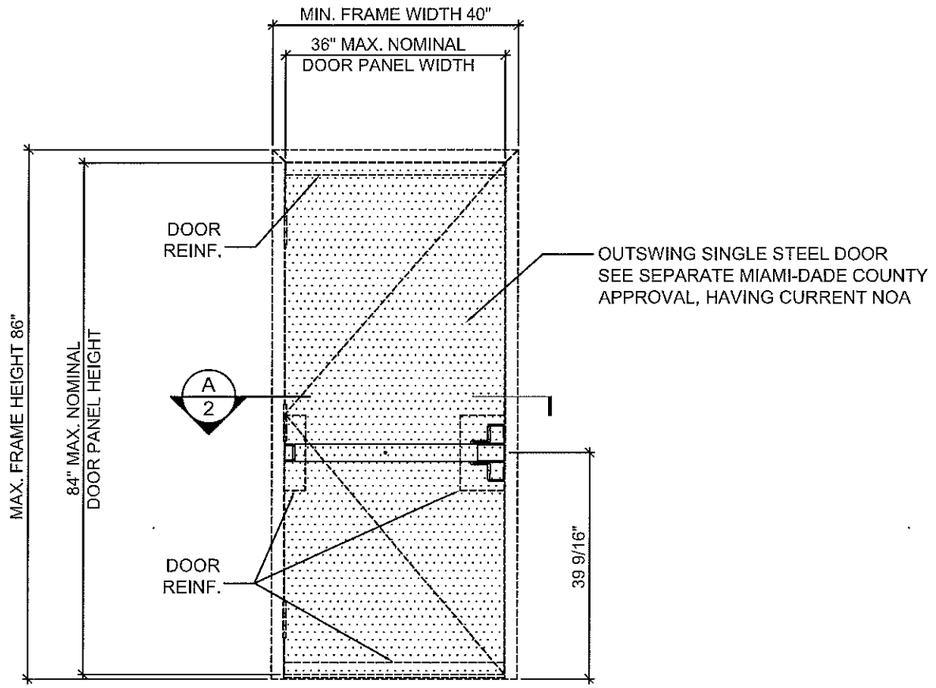

DESIGN HARDWARE SERIES 1000 & 2000 RIM PANIC EXIT DEVICE (LMI) - COMPONENT APPROVAL

(X)

INTERIOR ELEVATION

MAX. DESIGN LOAD
(FOR SIZES SHOWN ABOVE OR SMALLER)
AS PERMITTED BY FBC
+75.0 PSF
-75.0 PSF

GENERAL NOTES:

- THIS PRODUCT HAS BEEN DESIGNED AND TESTED TO COMPLY WITH THE REQUIREMENTS OF THE 5TH EDITION (2014) FLORIDA BUILDING CODE INCLUDING HIGH VELOCITY HURRICANE ZONE (HVHZ).
- HARDWARE WAS TESTED FOR LARGE MISSILE IMPACT.
- DESIGN HARDWARE SERIES 1000 & 2000 RIM PANIC LOCATED AT 39 9/16" UP FROM BOTTOM EDGE OF THE OPERABLE PANEL

LIMITATIONS:

1 - THE LOCKING PANIC HARDWARE PRODUCTS LISTED IN THIS NOA SHALL BE USED IN CONJUNCTION WITH CURRENT NOA'S UTILIZING SIMILAR LOCKING COMPONENTS. DESIGN PRESSURE RATING WILL BE LIMITED BY THE LOWEST RATED APPROVAL. THE PRODUCT CAN BE USED WITH HOLLOW - METAL STEEL DOORS HOLDING CURRENT NOA

2 - THIS HARDWARE COMPONENT IS APPROVED AS AN ALTERNATIVE DEVICE TO BE USED IN A SINGLE PANEL STEEL DOOR. HOLDING CURRENT NOA. THE LOWEST DESIGN PRESSURE RATING AT THIS COMPONENT OR THE DOOR SHALL APPLY.

3 - DOOR PANEL SHALL BE CORE FILLED WITH APPROVED PAPER HONEYCOMB OR CORE COMPLYING WITH FBC OPTIONS. WITH MINIMUM OVERALL 1.75" THICKNESS.

4 - DOOR PANEL FACE SHEET: MIN. 20 GA.(0.032" THK.) STEEL Fy = 47.5 KSI MIN. DOOR FRAME: MIN. 18 GA. (0.053" THK.) STEEL Fy = 45.1 KSI MIN

5 - DOOR PANEL OPTION: STAINLESS STEEL A316 OR A304 MIN. 20 GA. (0.032" THK.) Fy=47.5 KSI OR BETTER MAY QUALIFY HAVING "MIL-CERTIFICATE" AS A VERIFICATION OF THE AVAILABLE MIN. YIELD STRENGTH
DOOR FRAME OPTION: STAINLESS STEEL A316 OR A304 MIN. 18 GA. (0.053" THK.) Fy=45.1 KSI OR BETTER MAY QUALIFY HAVING "MIL-CERTIFICATE" AS A VERIFICATION OF THE AVAILABLE MIN. YIELD STRENGTH

6 REINFORCEMENTS:

6.1 - MIN. 14" LONE PANIC BOX REINF. (1-3/16" x 4-3/16" x 16GA) @ DOOR & HINGE STILES AT PANIC LOCATION AS REQUIRED

6.2 - 2 MIN. 1-5/8" x 1-3/16" x 16GA (.053") FULL LENGTH END CHANNEL @ TOP & BOTTOM OF THE DOOR PANEL IS REQUIRED

7 - ELECTRICAL INSTALLED IS NOT PART OF THE APPROVAL & SUCH INSTALLATION MUST BE REVIEWED BY CORRESPONDING BUILDING AUTHORITY.

PRODUCT REVISED
as complying with the Florida Building Code
Acceptance No 16-1116.03
Expiration Date SEP 22, 2021
By [signature]
Miami Dade Product Control

SIGNATURE HARDWARE, LLC
211 ENDEAVOR
ROGERSVILLE, MO 65742
PH: (877) 258-1262

TITLE: DESIGN HARDWARE SERIES 1000 & 2000 RIM EXIT DEVICE

PREPARED BY:
BUILDING DROPS, INC.
398 E. DANIA BEACH BLVD. #338
DANIA BEACH, FL 33004
PH: (954) 399-8478 FX: (954) 744-4738

REVISIONS

NO.	DESCRIPTION	BY	DATE

HERMES F. NORERO
LICENSE No. 73778
STATE OF FLORIDA
PROFESSIONAL ENGINEER

DATE: 12.20.16
DWN BY: AM
CHK BY: HFN
SCALE: NTS

DWG #: MDI007

SHEET: 1 OF 3

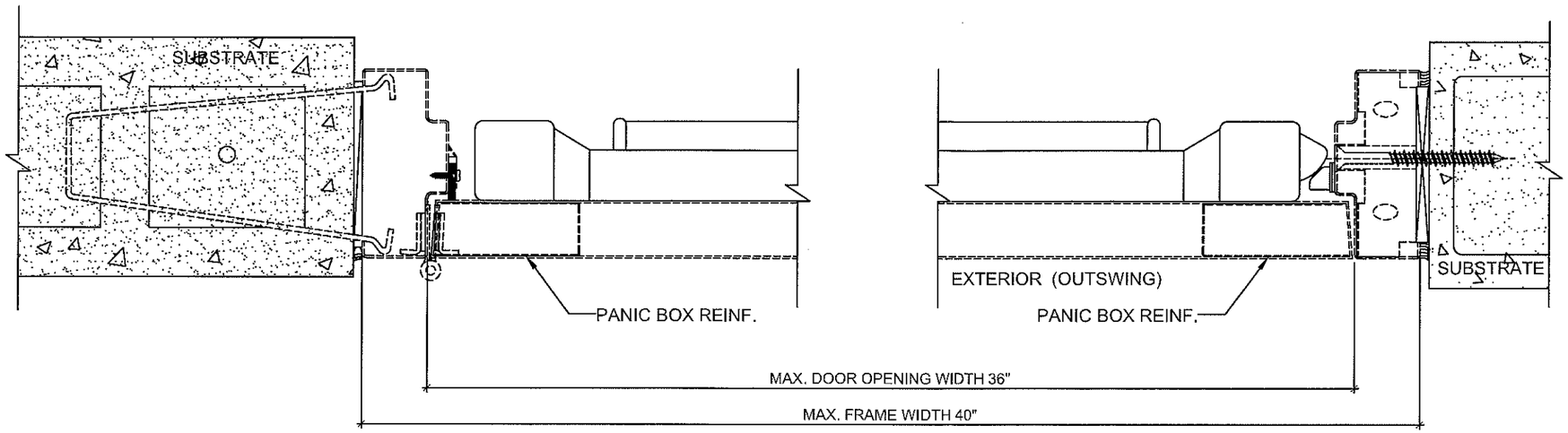

A/2 SERIES 1000 & 2000 RIM EXIT DEVICE

NOTE:
HOLLOW METAL STEEL DOORS & FRAME SIZES AND ITS ANCHORS & SUBSTRATE AS PER DOOR CURRENT HOLDING NOA

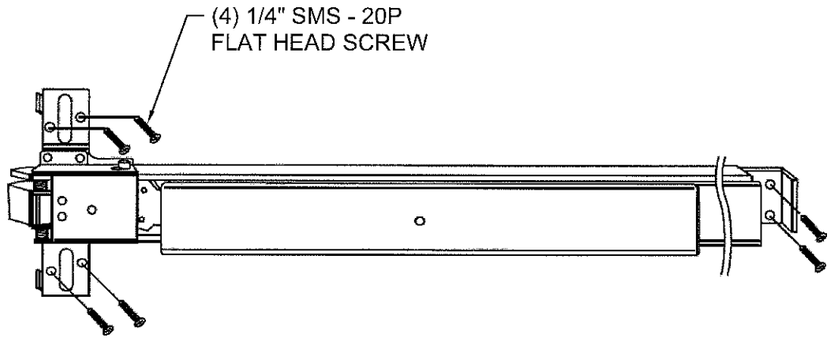

STEP #1

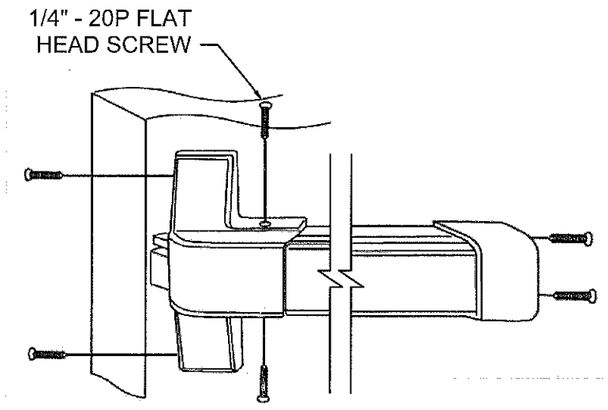

STEP #2

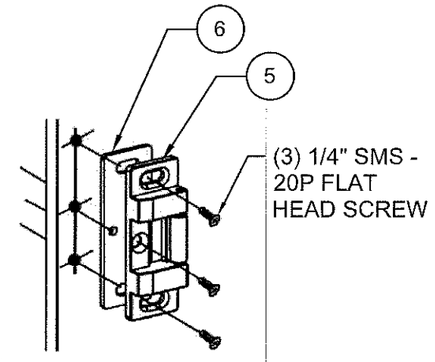

ROLLER STRIKE PLATE

STEP #3

SERIES 1000 & 2000 RIM PANIC EXIT DEVICE INSTALLATION

PRODUCT REVISED
as complying with the Florida Building Code
Acceptance No 16-1116.03
Expiration Date 9/22/21
By [signature]
Manual Dade Product Control

SIGNATURE HARDWARE, LLC

211 ENDEAVOR
ROGERSVILLE, MO 65742
PH: (877) 258-1262

TITLE:
DESIGN HARDWARE SERIES
1000 & 2000 RIM EXIT DEVICE

PREPARED BY:
BUILDING DROPS, INC.
398 E. DANIA BEACH BLVD. #338
DANIA BEACH, FL 33004
PH: (954) 399-8478 FX: (954) 744-4738

REVISIONS

NO.	DESCRIPTION	BY	DATE

HERMES E. NORERO ★ LICENSE No. 73778 ★ STATE OF FLORIDA ★ PROFESSIONAL ENGINEER

HERMES E. NORERO, P.E.
FLORIDA P.E. NO. 73778
BUILDING DROPS, INC.
398 E. DANIA BEACH BLVD. #338
DANIA BEACH, FL 33004
FBPE CERT. OF AUTHORIZATION NO. 29578

DATE: 12.20.16
DWN BY: AM
CHK BY: HFN
SCALE: NTS

DWG #: MDI007

SHEET: 2 OF 3

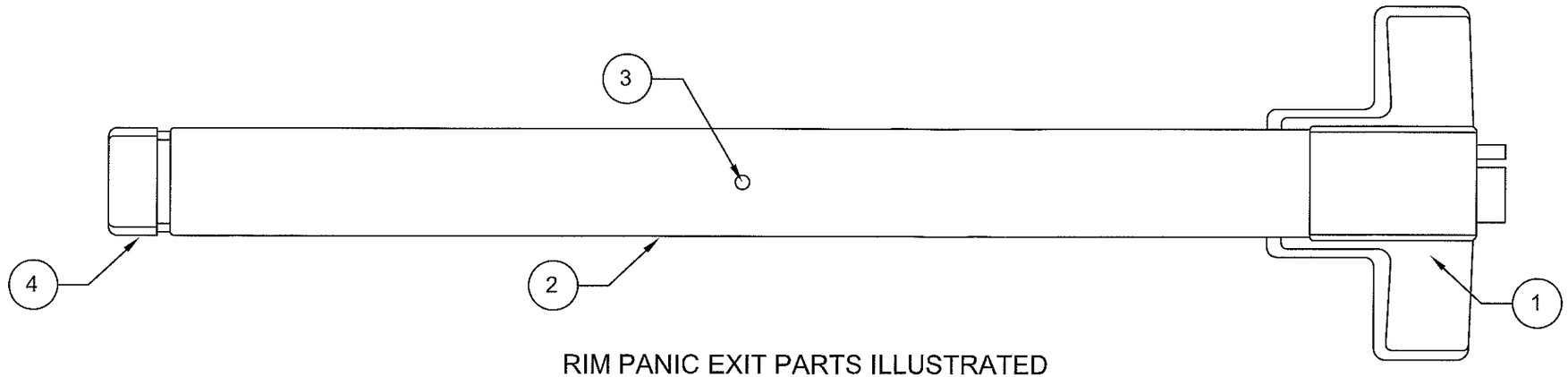

RIM PANIC EXIT PARTS ILLUSTRATED

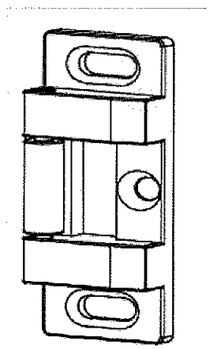

5 ROLLER STRIKE

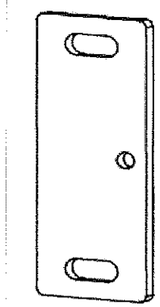

6 STRIKE SHIM

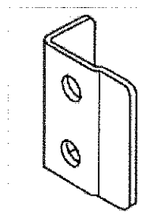

7 END COVER MOUNTING BRACKET

8 LATCHBOLT FILLER PLATE

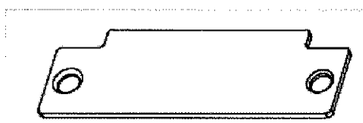

9 ASA FILLER PLATE

BILL OF MATERIALS

ITEM NO.	MATERIAL	QUANTITY	DESCRIPTION	MANF./SUPPLIER/REMARKS
1	STEEL	1	HEAD COVER	DESIGN HARDWARE
2	STEEL	1	ACTUATING BAR	DESIGN HARDWARE
3	STEEL	1	DOGGING DEVICE	DESIGN HARDWARE
4	STEEL	1	END COVER	DESIGN HARDWARE
5	STEEL	1	ROLLER STRIKE	DESIGN HARDWARE
6	STEEL	1	STRIKE SHIM	DESIGN HARDWARE
7	STEEL	1.	END COVER MOUNTING BRACKET	DESIGN HARDWARE
8	STEEL	1	LATCHBOLT FILLER PLATE	DESIGN HARDWARE
9	STEEL	1	ASA FILLER PLATE	DESIGN HARDWARE

PRODUCT REVISED
as complying with the Florida Building Code
Acceptance No. 16-1116.03
Expiration Date 9/22/21
By [signature]
Miami-Dade Product Control

SIGNATURE HARDWARE, LLC

211 ENDEAVOR
ROGERSVILLE, MO 65742
PH: (877) 258-1262

TITLE:
DESIGN HARDWARE SERIES
1000 & 2000 RIM EXIT DEVICE

PREPARED BY:
BUILDING DROPS, INC.
398 E. DANIA BEACH BLVD. #338
DANIA BEACH, FL 33004
PH: (954) 399-8478 FX: (954) 744-4738

REVISIONS

NO.	DESCRIPTION	BY	DATE

HERMES F. NORERO ★ STATE OF FLORIDA ★ LICENSED PROFESSIONAL ENGINEER No. 73778

DATE: 12.20.16
DWN BY: AM
CHK BY: HFN
SCALE: NTS

DWG #: MDI007

SHEET: 3 OF 3