MIAMI-DADE COUNTY
PRODUCT CONTROL SECTION
11805 SW 26 Street, Room 208
Miami, Florida 33175-2474
T (786) 315-2590 F (786) 315-2599
www.miamidade.gov/economy

DEPARTMENT OF REGULATORY AND ECONOMIC RESOURCES (RER)
BOARD AND CODE ADMINISTRATION DIVISION

NOTICE OF ACCEPTANCE (NOA)

Oldcastle Building Envelope, Inc.(TX)
803 Airport Road
Terrell, TX 75160

SCOPE:

This NOA is being issued under the applicable rules and regulations governing the use of construction materials. The documentation submitted has been reviewed and accepted by Miami-Dade County RER -Product Control Section to be used in Miami Dade County and other areas where allowed by the Authority Having Jurisdiction (AHJ).
This NOA shall not be valid after the expiration date stated below. The Miami-Dade County Product Control Section (In Miami Dade County) and/or the AHJ (in areas other than Miami Dade County) reserve the right to have this product or material tested for quality assurance purposes. If this product or material fails to perform in the accepted manner, the manufacturer will incur the expense of such testing and the AHJ may immediately revoke, modify, or suspend the use of such product or material within their jurisdiction. RER reserves the right to revoke this acceptance, if it is determined by Miami-Dade County Product Control Section that this product or material fails to meet the requirements of the applicable building code.
This product is approved as described herein, and has been designed to comply with the Florida Building Code, including the High Velocity Hurricane Zone.

DESCRIPTION: Series "MSD-375 & WSD-500" Outswing Glazed Aluminum Entrance Doors w/wo Transom

APPROVAL DOCUMENT: Drawing No. **16-093**, titled "Series MSD–375 (Medium) & WSD-500 (Wide) Aluminum Entrance Door (Wet Glazed)", sheets 1 through 32 (including 8A & 8B) of 32, dated 05/02/17, prepared by Tilteco, Inc., signed and sealed by Walter A. Tillit Jr., P. E., bearing the Miami–Dade County Product Control Approval stamp with the Notice of Acceptance number and approval date by the Miami–Dade County Product Control Section.

MISSILE IMPACT RATING: Large and Small Missile Impact Resistant

LIMITATIONS:

1. See Design Pressure Ratings based on Door sizes, glass types and locking Hardware in sheet **1**. See Panic Locking Hardware DP limitations in sheet 8, 8A & 8B. When doors or doors w/transom are mulled with **FG 5000** (Window wall) or **FG 5100** (Window Wall) or **HR250** Curtain Wall or **HR 251** Curtain Wall framing, the lower design pressure of this door or the mulled Window Wall or Curtain Wall shall control for entire assembly.
2. The Oldcastle Window Wall (WW) and Curtain Wall (CW) are under separate approval. The adequacy of anchors at the door mullion top & bottom end tributary loading condition to be reviewed by Bldg. official. This approval is **not** intended to revise any condition approved under respective WW or CW Notices of Acceptances(NOA(s))
3. The doors or doors w/ Transom are **not** rated for Water Resistant requirements.
4. The Max 24" high x 84" transom allowed per details 6 &7 /15 in sheet 14.
5. Jambs are into concrete or grout filled concrete blocks.

RENEWAL of this NOA shall be considered after a renewal application has been filed and there has been no change in the applicable building code negatively affecting the performance of this product.

TERMINATION of this NOA will occur after the expiration date or if there has been a revision or change in the materials, use, and/or manufacture of the product or process. Misuse of this NOA as an endorsement of any product, for sales, advertising or any other purposes shall automatically terminate this NOA. Failure to comply with any section of this NOA shall be cause for termination and removal of NOA.

ADVERTISEMENT: The NOA number preceded by the words Miami-Dade County, Florida, and followed by the expiration date may be displayed in advertising literature. If any portion of the NOA is displayed, then it shall be done in its entirety.

INSPECTION: A copy of this entire NOA shall be provided to the user by the manufacturer or its distributors and shall be available for inspection at the job site at the request of the Building Official.
This NOA consists of this page 1 and evidence pages E-1, E-2 and E-3, as well as approval document mentioned above.
The submitted documentation was reviewed by **Ishaq I. Chanda, P.E.**

MIAMI-DADE COUNTY APPROVED

5/11/17

NOA No. 16-1213.02
Expiration Date: May 18, 2022
Approval Date: May 18, 2017

Oldcastle Building Envelope, Inc. (TX)

NOTICE OF ACCEPTANCE: EVIDENCE SUBMITTED

A. DRAWINGS

1. Manufacturer's die drawings and sections
2. Drawing No. **16-093**, titled "Series MSD–375 (Medium) & WSD-500 (Wide) Aluminum Entrance Door (Wet Glazed)", sheets 1 through 32 (including 8A & 8B) of 32, dated 05/02/17, prepared by Tilteco, Inc., signed and sealed by Walter A. Tillit Jr., P. E.

B. TESTS

1. Test reports on: 1) Air Infiltration Test, per FBC, TAS 202-94 (Not conducted)
   2) Uniform Static Air Pressure Test, Loading per FBC TAS 202-94
   3) Water Resistance Test, per FBC, TAS 202-94 (Not conducted)
   4) Large Missile Impact Test per FBC, TAS 201-94
   5) Cyclic Wind Pressure Loading per FBC, TAS 203-94
   6) Forced Entry Test, per FBC, TAS 202-94

Along with marked-up drawings and installation diagram of double doors w/ Regent CVR panic Devices, prepared by Architectural Testing, Test Report No. **C0344.01-450-18**, dated 06/13/12, signed and sealed by Vinu Abraham, P.E. **(**Submitted under files # **12-0926.05)**

along with marked–up drawings and installation diagram of **aluminum medium stile entrance doors**, prepared by Architectural Testing, Inc., Test Report No. **ATI–89818.01–401–18,** dated 11/18/08 and 06/26/09, both signed and sealed by Joseph A. Reed, P. E. **(**Submitted under files # **11-1206.10/ #09–1228.01**).

along with marked-up drawings and installation diagram of **aluminum medium stile entrance doors**, prepared by Hurricane Test Laboratory, Inc., Test Reports No.'s **HTL–0105–1030–02**, **HTL–0105–0712–03**, **HTL–0105–0205–03**, HTL–**0105–0810–03**, **HTL–0105–0210–04** and **HTL–0105–0407–04**, dated 10/21/02 and 04/05/04, all signed and sealed by Vinu J. Abraham, P. E. (Submitted under file # **04–0209.03**)

3. REF Test reports on: 1) Air Infiltration Test, per FBC, TAS 202–94
   2) Uniform Static Air Pressure Test, Loading per FBC, TAS 202–94
   3) Water Resistance Test, per FBC, TAS 202–94
   4) Large Missile Impact Test, per FBC, TAS 201–94
   5) Cyclic Wind Pressure Loading, per FBC, TAS 203–94

along with marked–up drawings and installation diagram of Aluminum **Storefront**, prepared by Certified Testing Laboratories, Inc., Test Report No. **CTLA–1177W,** dated 01/06/04, signed and sealed by Ramesh Patel, P. E. (Submitted under **FG-5100** Storefront Systems)

along with marked–up drawings and installation diagram of Aluminum **Storefront**, prepared by Architectural Testing, Test Report No.**ATI-A1052.01-801-18**, **ATI-8918.01-401-18, ATI-8611.01-401.18, ATI-86107.01-401.18** and **ATI-74785.02-401.18**, all signed and sealed by Joseph A. Reed, P. E. (REF test reports per TAS 201, 202 & 203-94, submitted under **FG-5000** Storefront Systems)

along with marked–up drawings and installation diagram of Aluminum **Curtain Wall System**, prepared by Hurricane Testing, Test Report No. **HTL–0105–1194.04, HTL–0105–0809.04** and **HTL–0105–0717.04**, all signed and sealed by Vinu Abraham, P. E. (REF test reports per TAS 201, 202 & 203-94, submitted under **HR-250** Curtain Wall Systems).

Ishaq I. Chanda

Ishaq I. Chanda, P.E.
Product Control Examiner
NOA No. 16-1213.02
Expiration Date: May 18, 2022
Approval Date: May 18, 2017

NOTICE OF ACCEPTANCE: EVIDENCE SUBMITTED

C. TEST(continue):

4) REF Test reports on: 1) Air Infiltration Test, per FBC, TAS 202–94
2) Uniform Static Air Pressure Test, Loading per FBC, TAS 202–94
3) Water Resistance Test, per FBC, TAS 202–94
4) Large Missile Impact Test, per FBC, TAS 201–94
5) Cyclic Wind Pressure Loading, per FBC, TAS 203–94

along with marked–up drawings and installation diagram of Captured **Curtain Wall System,** prepared by Architectural Testing, Test Report No.**ATITX-A4707.01-801-18** and ATITX-**A4707.01-801-18** signed and sealed by Shawn Collins, P.E. and Joseph A. Reed, P. E., respectively.

along with marked–up drawings and installation diagram of Captured **Curtain Wall System,** prepared by Hurricane Testing, Test Report No. **HTL–0105–0117.05** and **HTL–0105–0903.08** signed and sealed by Vinu Abraham, P. E. (REF test reports per TAS 201, 202 & 203-94, submitted under **HR-251 C.W. Systems**).

5) Additional Test reports on: 1) Air Infiltration Test, per FBC, TAS 202-94
2) Uniform Static Air Pressure Test, Loading per FBC TAS 202-94
3) Water Resistance Test, per FBC, TAS 202-94 (Not conducted)
4) Large Missile Impact Test per FBC, TAS 201-94
5) Cyclic Wind Pressure Loading per FBC, TAS 203-94
6) Forced Entry Test, per FBC, TAS 202-94

Along with marked-up drawings and installation diagram of double doors w/ Regent CVR panic Devices, prepared by Architectural Testing, Test Report No. **C0344.01-450-18**, dated 06/13/12, signed and sealed by Vinu Abraham, P.E. (Submitted under files # **12-0926.05**)

along with marked–up drawings and installation diagram of **aluminum medium stile entrance doors**, prepared by Architectural Testing, Inc., Test Report No. **ATI–89818.01–401–18,** dated 11/18/08 and 06/26/09, both signed and sealed by Joseph A. Reed, P. E.

along with marked–up drawings and installation diagram of **aluminum double entrance doors**, prepared by Construction Consulting Lab Int'l., Test Report No. **CCLI-14-128,** dated 09/30/14 reviewed, signed and sealed by Abdol Rezadad, P. E.

D. CALCULATIONS

1. Anchor verification, structural & comparative analysis calculations, complying w/ FBC 2014 (5th edition) dated 01/22/13, prepared by Tilteco, Inc., dated 12/09/16 and last revised on 05/03/17, signed and sealed by Walter A. Tillit Jr., P. E.
2. Glazing complies with ASTM E1300–02, -04 &-09.

E. QUALITY ASSURANCE

1. Miami Dade Department of Regulatory and Economic Resources (RER).

Ishaq I. Chanda

Ishaq I. Chanda, P.E.
Product Control Examiner
NOA No. 16-1213.02
Expiration Date: May 18, 2022
Approval Date: May 18, 2017

NOTICE OF ACCEPTANCE: EVIDENCE SUBMITTED

F. MATERIAL CERTIFICATIONS

1. Notice of Acceptance No. **14-0423.15,** issued to **Eastman Chemical Company (MA),** for their "**Saflex CP" Saflex** and **Saflex HP Composite Glass Interlayer w/ PET Core**", expiring on 11/11/18.
2. Notice of Acceptance No. **14-0423.16**, issued to **Eastman Chemical Company (MA),** for their "**Saflex HP" Clear & color Glass Interlayer**", expiring on 04/14/18
3. Notice of Acceptance No. **15-1201.11**, issued to **Eastman Chemical Company (MA),** for their "**Saflex clear & color Glass Interlayer**", expiring on 05/21/21.

G. STATEMENTS (Except item #1, all other documents submitted under previous referenced files below)

1. Statement letters dated 12/07/16 of conformance to FBC2014 (5th Edition) and "No financial interest", prepared by Tilteco, Inc., signed and sealed by Walter A. Tillit, Jr., P. E.
2. Statement letter dated OCT. 19, 2010 of name change due to Merger from Oldcastle Engineered Products to Oldcastle Building Envelope, Inc., issued by Oldcastle Building Envelope, signed by Ms. Jacqueline D. Butler, Corporate Paralegal/ Legal Assistant (Submitted under file # **10–1214.16**)
3. Asset transfer agreement, dated April 20, 2010, signed by Mr. James Avanzini, Present of Oldcastle Glass Engineered Products, Inc. (Submitted under file # **10–1214.16**)
4. Asset sale agreement dated June 29, 2007 by Oldcastle Glass Engineered Products, Inc. dba Oldcastle Windows, Inc. and Vistawall Architectural Products division of Butler MFR. Products, Moduline Windows, Inc., signed by Mr. Adam J. Newman, Vice President of Oldcastle Glass Engineered Products and Mr. Daipayan (Deep) Bhattacharya, Vice President of Vistawall Architectural Product (Submitted under file # ***09 –1228.01***)
5. Notarized statement letter dated 03/05/10, issued by Oldcastle Glass, certifying that Oldcastle Glass Engineered Products, Inc. (Former Oldcastle Window Inc) has purchased Vistawall, a Div. of Butler Manufacturing Products, signed by Mollie Hines, Vice President & Secretory of Oldcastle Glass. (Submitted under file # ***09 –1228.01***)
6. Laboratories compliance letters, part of above referenced test reports.

H. OTHER

1. Catalog and Brochures of various Hardware.
2. The previous NOA(s) associated with this door files are NOA #**12-0926.05**, #**10–1214.16** (Oldcastle Building Envelope, Inc.), #**09 –1228.01** (Oldcastle Engineered Products, Inc.) and **#04–0209.03** (Vista wall Architectural Products Inc.).
3. Reference **FG-5000** Storefront Systems, **FG-5100** Storefront Systems, **HR-250 C.W. Systems** and **HR-251 Curtain Wall Systems** (under separate approvals).

Ishaq I. Chanda

Ishaq I. Chanda, P.E.
Product Control Examiner
NOA No. 16-1213.02
Expiration Date: May 18, 2022
Approval Date: May 18, 2017

SERIES MSD-375 (MEDIUM) & WSD-500 (WIDE) STILE OUT SWING ALUMINUM ENTRANCE DOORS W/ LARGE & SMALL MISSILE IMPACT RESISTANT GLASS

GENERAL NOTES:

1. ALUMINUM ENTRANCE DOOR SHOWN ON THIS PRODUCT APPROVAL DOCUMENT (P.A.D.) HAS BEEN VERIFIED FOR COMPLIANCE IN ACCORDANCE WITH THE 2014 (5th EDITION) OF THE FLORIDA BUILDING CODE. PRODUCT MAY BE INSTALLED WITHIN HIGH VELOCITY HURRICANE ZONES (HVHZ).

   DESIGN WIND LOADS SHALL BE DETERMINED AS PER SECTION 1620 (HVHZ) OF THE ABOVE MENTIONED CODE, FOR A BASIC WIND SPEED AS REQUIRED BY THE JURISDICTION WHERE THIS PRODUCT TO BE INSTALLED FOR A DIRECTIONALITY FACTOR Kd=0.85, USING ASCE 7-10 & SHALL NOT EXCEED THE MAXIMUM (A.S.D.) DESIGN PRESSURE RATING INDICATED ON THE SCHEDULE.

   IN ORDER TO VERIFY THE ABOVE CONDITION, ULTIMATE DESIGN WIND LOADS DETERMINED PER ASCE 7-10 SHALL BE FIRST REDUCED TO A.S.D. DESIGN WIND LOADS BY MULTIPLYING THEM BY 0.6 IN ORDER TO COMPARE THESE W/ MAX. (A.S.D) DESIGN PRESSURE RATINGS INDICATED ON THE SCHEDULE.

   IN ORDER TO VERIFY THAT ANCHORS ON THIS P.A.D., AS TESTED, WERE NOT OVERSTRESSED, A 33% INCREASE IN ALLOWABLE STRESS FOR WIND LOADS WAS NOT USED IN THEIR ANALYSIS. FASTENERS SPACING TO WOOD HAS BEEN DETERMINED IN ACCORDANCE WITH N.D.S. 2012.

2. THIS PRODUCT WILL NOT REQUIRE A HURRICANE PROTECTION DEVICE.

3. THIS PRODUCT IS NOT APPROVED FOR WATER INFILTRATION.

4. PROVIDE 1/4" MAX. LOAD BEARING SHIM (TYP.), WHEN ALLOWED BY THIS DRAWING.

5. ALL SCREWS USED FOR ASSEMBLY CONNECTIONS (METAL TO METAL TO BE STAINLESS STEEL 304 OR 316 AISI SERIES OR CORROSION RESISTANT COATED CARBON STEEL AS PER DIN 50018 AND SECTION 2411.3.3.4 OF THE FLORIDA BUILDING CODE WITH 50 ksi YIELD STRENGTH AND 90 ksi TENSILE STRENGTH.

6. WOOD BUCKS BY OTHERS, MUST BE ANCHORED PROPERLY TO TRANSFER LOADS TO THE BUILDING STRUCTURE. WOOD BUCKS MUST BE SOUTHERN PINE, G=0.55, AND SHALL COMPLY WITH SECTIONS 2411.3.3.3 & 2326 OF THE FLORIDA BUILDING CODE.

7. ALL ALUMINUM EXTRUSIONS IN CONTACT WITH STEEL, CONCRETE, GROUT FILLED CONCRETE BLOCK AND WOOD SHALL COMPLY WITH SECTIONS 2003.8.4.2, 2003.8.4.4, 2003.8.4.5 AND 2003.8.4.6 OF THE FLORIDA BUILDING CODE, RESPECTIVELY.

8. SHOP DRAWINGS PREPARED BASED ON THIS APPROVAL AND TAKING INTO ACCOUNT THE SPECIFIC JOB CONDITIONS, SHALL BE SUBMITTED TO THE BUILDING OFFICIAL AS PART OF THE PERMIT DOCUMENTS.

9. SUBSTRATE MATERIAL NOTED ON THIS DRAWING AS EXISTING BY OTHERS, POURED CONCRETE, GROUT FILLED CONCRETE BLOCK AND WOOD MUST WITHSTAND THE LOADS IMPOSED BY THIS PRODUCT.

10. THIS PRODUCT'S INSTALLATION SHALL COMPLY WITH ALL SPECS INDICATED IN THIS DRAWING PLUS ANY BUILDING AND ZONING REGULATIONS PROVIDED BY THE JURISDICTION WHERE PERMIT IS APPLIED TO.

12. (a) THIS P.A.D. PREPARED BY THIS ENGINEER IS GENERIC AND DOES NOT PROVIDE INFORMATION FOR A SITE SPECIFIC PROJECT; i.e. WHERE THE SITE CONDITIONS DEVIATE FROM THE P.A.D.

(b) CONTRACTOR TO BE RESPONSIBLE FOR THE SELECTION, PURCHASE AND INSTALLATION INCLUDING LIFE SAFETY OF THIS PRODUCT, BASED ON THIS P.A.D., PROVIDED HE/SHE DOES NOT DEVIATE FROM THE CONDITIONS DETAILED ON THIS DOCUMENT. CONSTRUCTION SAFETY AT SITE IS THE CONTRACTOR'S RESPONSIBILITY.

(c) THIS P.A.D. WILL BE CONSIDERED INVALID IF ALTERED BY ANY MEANS.

(d) SITE SPECIFIC PROJECTS SHALL BE PREPARED BY A FLORIDA REGISTERED ENGINEER OR ARCHITECT WHICH WILL BECOME THE ENGINEER OF RECORD (E.O.R.) FOR THE PROJECT AND WHO WILL BE RESPONSIBLE FOR THE PROPER USE OF THE P.A.D. ENGINEER OF RECORD, ACTING AS DELEGATED ENGINEER TO THE P.A.D. ENGINEER, SHALL SUBMIT TO THIS LATTER THE SITE SPECIFIC DRAWINGS FOR REVIEW.

(e) ORIGINAL P.A.D. SHALL BEAR THE DATE AND ORIGINAL SEAL AND SIGNATURE OF THE PROFESSIONAL ENGINEER OF RECORD THAT PREPARED IT.

13. PRODUCT MANUFACTURER'S LABEL SHALL BE LOCATED ON A READILY VISIBLE LOCATION AT PRODUCT IN ACCORDANCE WITH SECTION ONE LABEL SHALL BE PLACED FOR EVERY OPENING.

LIMITATIONS SCHEDULE

SERIES MSD-375 & WSD-500 ALUMINUM ENTRANCE DOORS		
SIZES	**3'-6"x8'-0" OR 7'-0"x8'-0" (SINGLE) (DOUBLE)**	**4'-0"x8'-0" OR 8'-0"x8'-0" (SINGLE) (DOUBLE)**
TEST REPORTS (THIS PRODUCT'S ADEQUACY FOR IMPACT AND WIND RESISTANCE HAS BEEN VERIFIED IN ACCORDANCE WITH SECTION 1626 & 1609.1.2 OF THE ABOVE MENTIONED CODE AS PER PROTOCOLS TAS-201, TAS-202, TAS-203, AND AS PER SUBMITTED STRUCTURAL CALCULATIONS, PERFORMED AS PER SECTIONS 1616 OF THE FLORIDA BUILDING CODE)	PER HURRICANE TESTING LABORATORY: #HTL-0105-1030-02 #HTL-0105-0712-03 #HTL-0105-0205-03 #HTL-0105-0810-03 #HTL-0105-0210-04 #HTL-0105-0407-04 PER CERTIFIED TESTING LABORATORY: #CTLA-1177W PER ARCHITECTURAL TESTING LAB: #95631.01-401-18 #C0344-01-450-18 PER CONSTRUCTION CONSULTING LABORATORY: #CCLI-14-128	PER CONSTRUCTION CONSULTING LABORATORY: #CCLI-14-128
MAX. A.S.D. DESIGN PRESSURE RATING	+70.0 psf, -80.0 psf.	+70.0 psf, -70.0 psf.
COMPONENTS	SHEETS 2 & 3	SHEETS 2 & 3
BILL OF MATERIALS	SHEETS 4 & 5	SHEETS 4 & 5
HARDWARE SCHEDULE	SHEETS 6 & 7	SHEETS 20 & 21
GLASS TYPE	G-31, G-32, G-33, G-34, G-15 SHEETS 9 & 10	G-15 & G-33 SEE SHEET 22
PANIC DEVICE	USE AT +60, -60 psf MAX.(SHEETS 8, 8A) USE AT +70, -80 psf MAX. (SHEET 8B)	N/A
TRANSOM	SHEETS 14, 15 & 16	N/A
DOOR CORNER DETAIL	SHEET 29	SHEET 29
ASSEMBLY DETAILS	SHEETS 12, 13, 15, 16, 30, 31 & 32	SHEETS 24, 25, 27, 30, 31 & 32
ANCHORS	SHEETS 17, 18 & 19	SHEET 28
DOOR JAMB MULLIONS	SHEET 32	SHEET 32

THIS DRAWING SHALL ONLY BE USED TO OBTAIN PERMITS IN THE STATE OF FLORIDA

Approved as complying with the Florida Building Code
Date MAY 18, 2017
NOA# 16-1213.02
Miami Dade Product Control
By Ishaq I. Chanda

FLORIDA BUILDING CODE (HIGH VELOCITY HURRICANE ZONE)

SERIES MSD-375 (MEDIUM) & WSD-500 (WIDE) STILE ALUMINUM ENTRANCE DOOR (WET GLAZED) LARGE & SMALL MISSILE IMPACT

DRAWN BY: M.L.
DATE: 08/10/16
DRAWING No. 16-093
SHEET 1 OF 32

Oldcastle BuildingEnvelope®
803 AIRPORT RD. TERRELL TX 75160
www.OldcastleBE.com-Phone 800-869-4567

REV. NO	DESCRIPTION	DATE
1	MDC COMMENTS	4/12/17
2		
3		
4		

©2016 TILTECO, INC.

TILLECO INC.
TILLIT TESTING & ENGINEERING COMPANY
6355 N.W. 36th Street, VIRGINIA GARDENS, FL. 33166
Phone: (305)871-6335 Fax: (305)871-7331
EB-0006719
WALTER A. TILLIT Jr. P.E.
FLORIDA Lic. # 44167

WALTER A. TILLIT JR. LICENSE No. 44167 STATE OF FLORIDA PROFESSIONAL ENGINEER

SERIES MSD-375 & WSD-500 ALUMINUM MEDIUM & WIDE STILE ENTRANCE DOORS (WET GLAZED) COMPONENTS

SCALE: 4" = 1"

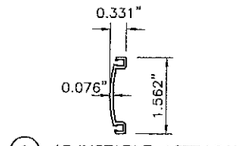

(1) ADJUSTABLE ASTRAGAL ASSEMBLY
AS-6

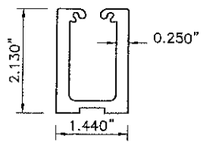

(2) (3) (4) (4A) CORNER BLOCKS
CB-21, 38, 61 & 71

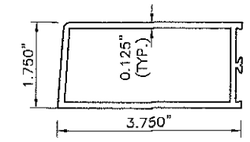

(5) MEDIUM STILE MS-375
D-6

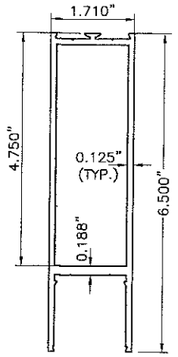

(6) HORIZONTAL MID-RAIL/TOP RAIL
D-21

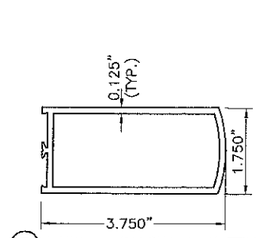

(7) MEDIUM INACTIVE MEETING STILE MS-375
D-24

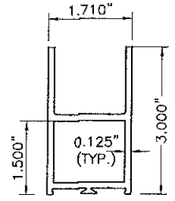

(8) DOOR TOP RAIL
D-38

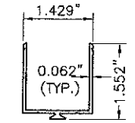

(9) MID RAIL ADAPTER
D-62

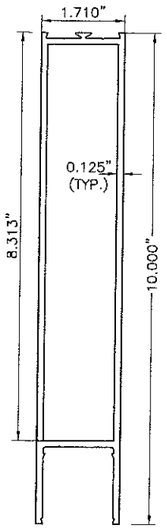

(11) 10" ADA BOTTOM RAIL
D-61

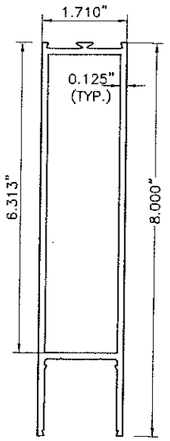

(11A) 8" BOTTOM RAIL
D-71

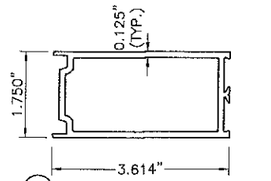

(10) MEDIUM ACTIVE MEETING STILE MS-375
D-69

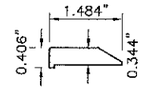

(13) PANIC DOOR STOP
D-134-3

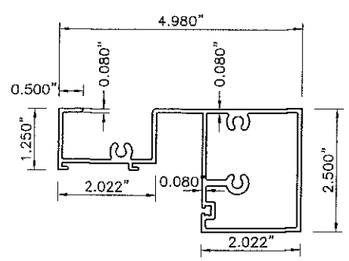

(15) HEAD HORIZONTAL/ TRANSOM HEADER
FG-5206

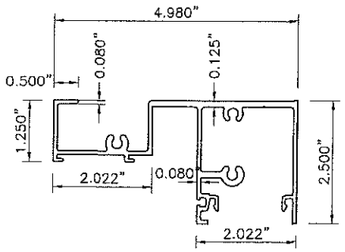

(15A) HEAD HORIZONTAL/ TRANSOM HEADER
FG-5204

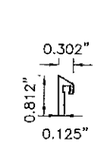

(12) DOOR BOTTOM RAIL SWEEP ASSEMBLY
D-118

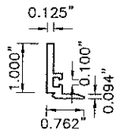

(14) SCREW ATTACHED DOOR GLASS STOP
D-152

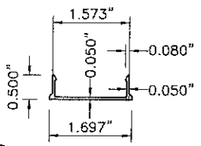

(16) HEAD FILLER
FG-5113

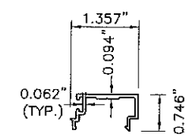

(18) SNAP-IN DOOR STOP
FG-5163

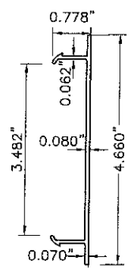

(19) FLAT FILLER
FG-5167

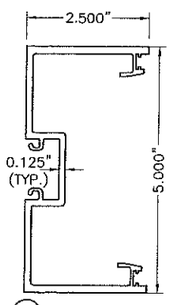

(20) DOOR JAMB @ FG-5100T
FG-5168

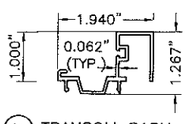

(21) TRANSOM SASH
FG-5198

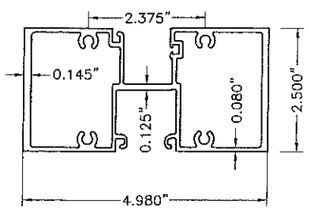

(22) DOOR HEADER/ TRANSOM BAR
FG-5197

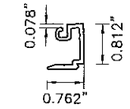

(23) SNAP-IN DOOR LAMINATED GLASS STOP
S-83

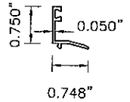

(23A) SNAP-IN DOOR INSULATED GLASS DOOR
S-81

FLORIDA BUILDING CODE (HIGH VELOCITY HURRICANE ZONE)

SERIES MSD-375 (MEDIUM) & WSD-500 (WIDE)
STILE ALUMINUM ENTRANCE DOOR (WET GLAZED)
LARGE & SMALL MISSILE IMPACT

DRAWN BY: M.L.
DATE: 08/10/16
DRAWING No. 16-093
SHEET 2 OF 32

REV. NO	DESCRIPTION	DATE
1		
2		
3		
4		

Oldcastle BuildingEnvelope®
803 AIRPORT RD. TERRELL TX 75160
www.OldcastleBE.com-Phone 800-869-4567

©2016 TILTECO, INC.

TILLIT TESTING & ENGINEERING COMPANY INC.
6355 N.W. 36th, St., Ste. 305, MIRAMA GARDENS, FL 33166
Phone : (305)871-1530 Fax : (305)871-1531
EB-0006719
WALTER A. TILLIT Jr. P.E.
FLORIDA Lic. # 44167

WALTER A. TILLIT JR. LICENSE No. 44167 STATE OF FLORIDA PROFESSIONAL ENGINEER

Approved as complying with the Florida Building Code
Date 5/18/17
NOA# 16-1213.02
Miami Dade Product Control
By

SERIES MSD-375 & WSD-500 ALUMINUM MEDIUM & WIDE STILE ENTRANCE DOORS (WET GLAZED) COMPONENTS

SCALE: 4" = 1"

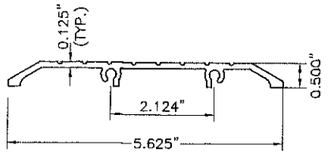

(24) THRESHOLD
TH-57

(25) DOOR STOP WEATHERING
D-125

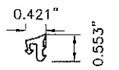

(26) L.G. DRY GLAZING GASKET
FG-1133

(26A) I.G. GLAZING GASKET
V-28

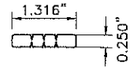

(36) SETTING BLOCK
HP-17

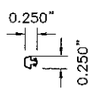

(35) SPACER GASKET
FG-5188

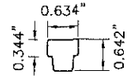

(36A) SETTING BLOCK
FG-5229

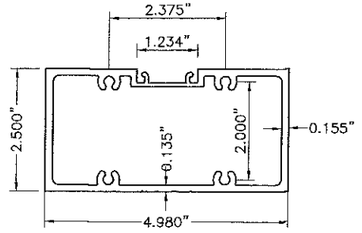

(42) DOOR HEADER-OFFSET ARM
FG-5172

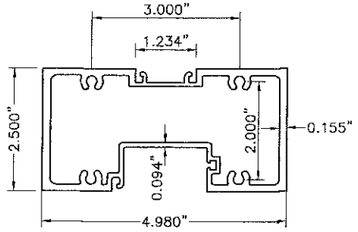

(42A) DOOR HEADER/ TRANSOM BAR
FG-5235

(41) L.G. SETTING BLOCK
PP-1 FG-5000

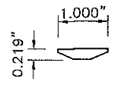

(41A) I.G. SETTING BLOCK
D-123

(45) DOOR SWEEP
D-120

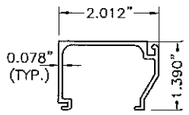

(47) GLASS STOP
FG-5190

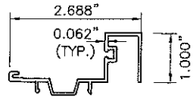

(50) TRANSOM SASH
FG-5181

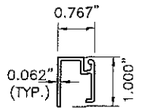

(52) TRANSOM GLASS STOP
FG-5182

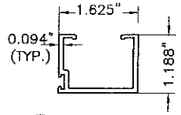

(53) DOOR STOP
DS-104

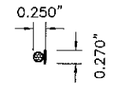

(56) BULB GASKET FOR FILLER
CW-998

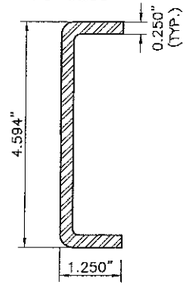

(57) DOOR JAMB STEEL REINFORCEMENT
FG-5000-PP-8

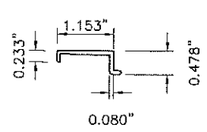

(60) ANCHOR PLATE
FG-5000-FP-17
8" LONG

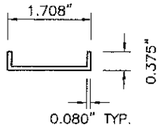

(62) ANCHOR PLATE
FG-5000-FP-19
8" LONG

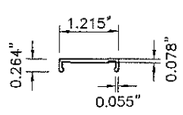

(63) ANCHOR PLATE
FG-5000-FP-20
8" LONG

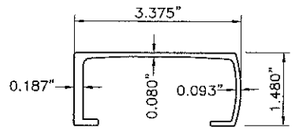

(64) STILE REINFORCEMENT SLEEVE
D-243-01
5.26" LONG

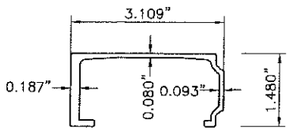

(65) STILE REINFORCEMENT SLEEVE
D-244-01
5.26" LONG

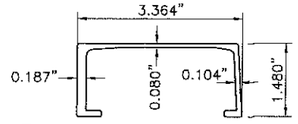

(66) STILE REINFORCEMENT SLEEVE
D-247-01
5.26" LONG

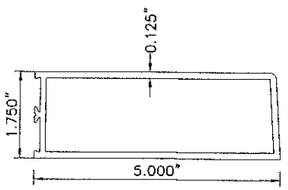

(67) WIDE STILE WS-500
D-13

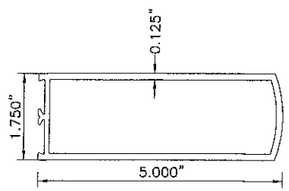

(68) INACTIVE MEETING WIDE STILE WS-500
D-25

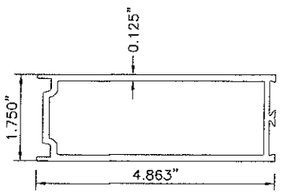

(69) ACTIVE MEETING WIDE STILE WS-500
D-70

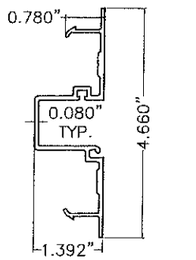

(70) POCKET FILLER FOR FG-5000
FG-5196

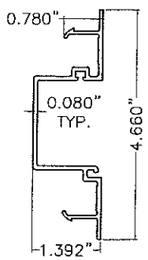

(71) POCKET FILLER FOR FG-5100
FG-5179

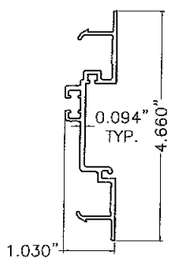

(72) POCKET FILLER FOR FG-5100T
FG-5217

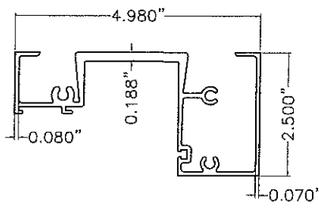

(73) HEAD/TRANSOM HEADER FOR FG-5100,FG-5100T
FG-5178

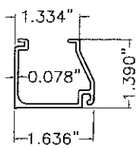

(74) GLASS STOP FOR FG-5100,FG-5100T
FG-5177

FLORIDA BUILDING CODE (HIGH VELOCITY HURRICANE ZONE)

SERIES MSD-375 (MEDIUM) & WSD-500 (WIDE) STILE ALUMINUM ENTRANCE DOOR (WET GLAZED) LARGE & SMALL MISSILE IMPACT

M.L. DRAWN BY:
08/10/16 DATE:
16-093 DRAWING No.
SHEET 3 OF 32

REV. NO	DESCRIPTION	DATE	REV. No	DESCRIPTION	DATE
1			3		
2			4		

Oldcastle BuildingEnvelope®
803 AIRPORT RD. TERRELL TX 75160
www.OldcastleBE.com - Phone 800-869-4567

©2016 TILTECO, INC.

TILTECO INC.
TESTING & ENGINEERING COMPANY
TILLIT TESTING & ENGINEERING COMPANY
6355 N.W. 36th. St. Suite 305 VIRGINIA GARDENS, FL. 33166
Phone : (305)871-1530 , Fax : (305)871-1531
EB-0006719
WALTER A. TILLIT Jr, P.E.
FLORIDA Lic. # 44167

WALTER A. TILLIT JR. LICENSE No. 44167 STATE OF FLORIDA PROFESSIONAL ENGINEER

Approved as complying with the Florida Building Code
Date 5/18/17
NOA# 16-1213.02
Miami Dade Product Control
By Ishaq I. Chanda

BILL OF MATERIALS MSD-375 & WSD-500 DOORS

ITEM No.	PART NUMBER	DESCRIPTION	DIMENSIONS	MATERIAL	MANUFACTURER	NOTES
1.	AS-6	ADJUSTABLE ASTRAGAL ASSEMBLY	.331" X 1.562" X .076"	6063-T6 ALUMINUM	OBE	
2.	CB-21	CORNER BLOCK	2.130" X 1.44" X .25"	6063-T5 ALUMINUM	OBE	4.437" LONG
3.	CB-38	DOOR CORNER BLOCK	2.130" X 1.44" X .25"	6063-T5 ALUMINUM	OBE	1.23" LONG
4.	CB-61	DOOR CORNER BLOCK	2.130" X 1.44" X .25"	6063-T5 ALUMINUM	OBE	8" LONG
4A.	CB-71	DOOR CORNER BLOCK	2.130" X 1.44" X .25"	6063-T5 ALUMINUM	OBE	6" LONG. AT 3'-6"x8'-0" & 7'-0"x8'-0" DOORS
5.	D-6	MEDIUM STILE MS-375	3.75" X 1.75" X .125"	6063-T5 ALUMINUM	OBE	
6.	D-21	HORIZONTAL MID-RAIL/TOP RAIL	6.50" X 1.71" X .125"	6063-T5 ALUMINUM	OBE	
7.	D-24	INACTIVE MEETING MEDIUM STILE MS-375	3.75" X 1.75" X .125"	6063-T5 ALUMINUM	OBE	
8.	D-38	DOOR TOP RAIL	3.00" X 1.71" X .125"	6063-T5 ALUMINUM	OBE	
9.	D-62	MID-RAIL ADAPTER	1.429" X 1.552" X .062"	6063-T5 ALUMINUM	OBE	
10.	D-69	ACTIVE MEETING MEDIUM STILE MS-375	3.614" X 1.75" X .125"	6063-T5 ALUMINUM	OBE	
11.	D-61	10" ADA BOTTOM RAIL	10.00" X 1.71" X .125"	6063-T6 ALUMINUM	OBE	
11A.	D-71	8" BOTTOM RAIL	8.00" X 1.71" X .125"	6063-T6 ALUMINUM	OBE	AT 3'-6"x8'-0" & 7'-0"x8'-0" DOORS
12.	D-118	DOOR BOTTOM RAIL SWEEP ASSEMBLY	.812" X .302" X .125"	6063-T5 ALUMINUM	OBE	CUT TO DOOR WIDTH MINUS 5/8"
13.	D-134-3	PANIC DOOR STOP	.344" X 1.484" X 3.00"	6063-T5 ALUMINUM	OBE	
14.	D-152	SCREW ATTACHED DOOR GLASS STOP	1.00" X .762" X .125"	6063-T6 ALUMINUM	OBE	ATTACH W/ (30) 12" ON CENTER
15.	FG-5206	HEAD HORIZONTAL/TRANSOM HEADER	2.50" X 4.98" X .080"	6063-T6 ALUMINUM	OBE	FOR FG-5000 SYSTEMS. AT 3'-6"x8'-0" & 7'-0"x8'-0" DOORS
15A.	FG-5204	HEAD HORIZONTAL/TRANSOM HEADER	2.50" X 4.98" X .080"	6063-T6 ALUMINUM	OBE	FOR FG-5000 SYSTEMS. AT 3'-6"x8'-0" & 7'-0"x8'-0" DOORS
16.	FG-5113	HEAD FILLER	.50" X 1.69" X .050"	6063-T5 ALUMINUM	OBE	
18.	FG-5163	SNAP-IN DOOR STOP	.746" X 1.357" X .062"	6063-T6 ALUMINUM	OBE	
19.	FG-5167	FLAT FILLER	.778" X 4.66" X .080"	6063-T6 ALUMINUM	OBE	RUNS FULL LENGTH
20.	FG-5168	DOOR JAMB @ FG-5000, FG-5100 & FG-5100T	2.50" X 5.00" X .125"	6063-T6 ALUMINUM	OBE	
21.	FG-5198	TRANSOM SASH	1.00" X 1.940" X .062"	6063-T6 ALUMINUM	OBE	
22.	FG-5197	DOOR HEADER/TRANSOM BAR	2.50" X 4.90" X .080"	6063-T6 ALUMINUM	OBE	
23.	S-83	SNAP-IN DOOR LAMINATED GLASS STOP	.812" X .762" X .078"	6063-T6 ALUMINUM	OBE	
23A.	S-81	SNAP-IN DOOR INSULATED GLASS STOP	.748" X .75" X .050"	6063-T5 ALUMINUM	OBE	
24.	TH-57	THRESHOLD	.50" X 5.625" X .125"	6063-T5 ALUMINUM	OBE	
25.	D-125	DOOR STOP WEATHERING	.125" SPACE	SANTOPRENE	UNIVERSAL RUBBER	
26.	FG-1133	GLAZING GASKET	.197" SPACE	EPDM	VARIES	70 DUROMETER, USE AT LAMINATED GLASS
26A.	V-28	GLAZING GASKET	.30" X .282"	VINYL	OBE	USE AT INSULATED GLASS
27.	FS-2	ATTACH D-118 SWEEP TO DOOR BOTTOM	#8 X 3/8" PPHSMS	STEEL	VARIES	
28.	FS-7	ATTACH RAILS TO CORNER BLOCKS	#10 X 3/4" PFH	STEEL	VARIES	
29.	FS-8	SPLINE ASSEMBLY SCREW	#14 X 1" HHSTS	STEEL	VARIES	
30.	FS-114	ATTACH D-152 TO DOOR	#8 X 3/8" PPHSMS	STEEL	VARIES	SPACED @ 12" O.C.
31.	SM-5601	JOINT SEALANT TAPE	.125" X .50" VARIES	BUTYL	SCHNEE-MOREHEAD	
32.	WP-085	ADJUSTABLE ASTRAGAL WEATHERING	VARIABLE SPACE	WOOL PILE	SCHLEGEL	
33.	FS-56	ATTACH D-134-2 PANIC STOP	#12 X 3/4" PFHSMS	STEEL	VARIES	
34.	FS-49	ADJUSTABLE ASTRAGAL SCREW	#8 X 1/2" PPHSMS	STEEL	VARIES	
35.	FG-5188	SPACER GASKET	.25" X .25"	EPDM	VARIES	85 DUROMETER
36.	HP-17	SETTING BLOCK	1.316" X .25" X 4" LONG	EPDM	VARIES	90 DUROMETER
36A.	FG-5229	SETTING BLOCK	.634" X .642" X 4" LONG	EPDM	VARIES	85 DUROMETER

FLORIDA BUILDING CODE (HIGH VELOCITY HURRICANE ZONE)

SERIES MSD-375 (MEDIUM) & WSD-500 (WIDE) STILE ALUMINUM ENTRANCE DOOR (WET GLAZED) LARGE & SMALL MISSILE IMPACT

M.L. DRAWN BY:

08/10/16 DATE:

16-093 DRAWING No.

SHEET 4 OF 32

Oldcastle BuildingEnvelope®
803 AIRPORT RD. TERRELL TX 75160
www.OldcastleBE.com-Phone 800-869-4567

REV. NO	DESCRIPTION	DATE
1		
2		

REV. No	DESCRIPTION	DATE
3		
4		

©2016 TILTECO, INC.

TILLIT TESTING & ENGINEERING COMPANY
6355 N.W. 36th. St. Ste. 305, VIRGINIA GARDENS, FL 33166
Phone : (305)871-1530 , Fax : (305)871-1531
EB-0006719
WALTER A. TILLIT Jr. P.E.
FLORIDA Lic. # 44167

WALTER A. TILLIT JR. LICENSE NO. 44167 STATE OF FLORIDA PROFESSIONAL ENGINEER

Approved as complying with the Florida Building Code
Date 5/18/17
NOA# 16-1213.02
Miami Dade Product Control
By

BILL OF MATERIALS MSD-375 & WSD-500 DOORS (CONTINUED)

ITEM No.	PART NUMBER	DESCRIPTION	DIMENSIONS	MATERIAL	MANUFACTURER	NOTES
37.	995 SEALANT	STRUCTURAL SILICONE	FILL SPACE	SILICONE	DOW CORNING 995	USE FOR UP TO +70, -80 psf. ASD PRESSURE RATING
37A.	SEALANT	STRUCTURAL SILICONE PROGLAZE II	FILL SPACE	SILICONE	TREMCO	USE FOR UP TO +70, -70 psf. ASD PRESSURE RATING
38.	921	USED AS PERIMETER SEALANT	FILL SPACE	POLYURETHANE	VULKEM	
40.	FS-39	ATTACH CORNER BLOCK TO STILES	¼" X 20 X ¾" HHMS	STEEL	VARIES	
41.	FG-5000-PP1	SETTING BLOCK	⅛" X ¾" X 4"	EPDM	VARIES	USE FOR LAMINATED GLASS
41A.	D-123	SETTING BLOCK	1.00" X 0.219"	RIGID PVC	VARIES	USE FOR INSULATED GLASS
42.	FG-5172	DOOR HEADER-OFFSET ARM	2.50" X 4.98" X .135"	6063-T6 ALUMINUM	OBE	
42A.	FG-5235	DOOR HEADER/TRANSOM BAR	2.50" X 4.98" X .135"	6063-T6 ALUMINUM	OBE	AT 3'-6"x8'-0" & 7'-0"x8'-0" DOORS
43.	DS-104	OFFSET ARM COVER	1.188" X 1.625" X .094"	6063-T6 ALUMINUM	OBE	
44.	FASTENER	ATTACH DS-104 TO FG-5172	#10 X 2" FHPSMS	STEEL	VARIES	SINGLE DOOR: 1 EA. 6" FROM LOCK STILE PAIR OF DRS: 1 EA. 6" EACH SIDE OF DR C/L
45.	D-120	DOOR WEATHERING STRIP	VARIABLE SPACE	VINYL	OBE	DOOR WIDTH MINUS 5/8"
46.	FG-5185	SPACER GASKET	.25" X .25"	SILICONE	VARIES	
47.	FG-5190	GLASS STOP	2.01" X 1.39" X .080"	6063-T6 ALUMINUM	OBE	FOR FG-5000 SYSTEMS. AT 3'-6"x8'-0" & 7'-0"x8'-0" DOORS
50.	FG-5181	TRANSOM SASH	1.00" X 2.69" X .062"	6063-T5 ALUMINUM	OBE	
51.	FS-55	ATTACH SC-1 CLIP	#10 X 1/2" PH ROUND	STEEL	VARIES	9" O.C.
52.	FG-5182	TRANSOM GLASS STOP	1.00" X .767" X .062"	6063-T5 ALUMINUM	OBE	
53.	DS-104	DOOR STOP	1.625" X 1.188" X .094"	6063-T5 ALUMINUM	OBE	USES SC-1 CLIP
56.	CW-998	BULB GASKET FOR FILLER	VARIES	FOAM-TITE	AMESBURY	
57.	FG-5000-PP-8	DOOR JAMB MULLION STL REINFORCING	1 1/4" X 4 9/16" X 1/4"	A-36 STEEL(ZINC PLATED)	VARIES	FULL LENGTH OF MULLION. COAT RICH PRIMER
58.	FS-38	ATTACH STL. REINFORCEMENT	1/4"-20 X 1/2" HH TYPE "F"	STEEL	VARIES	
59.	SC-1	STAINLESS STEEL CLIP	.281" X .968" X .032"	STAINLESS STEEL	OBE	9" O.C.
60.	FG-5000-FP-17	ANCHOR PLATE	1.153" X .478" X .080"X 8" LONG	6063-T5 ALUMINUM	OBE	USED @ 22
62.	FG-5000-FP-19	ANCHOR PLATE	.1.708" X .375" X .080"X 8" LONG	6063-T5 ALUMINUM	OBE	USED @ 24
63.	FG-5000-FP-20	ANCHOR PLATE	.1.215" X .264" X .078"X 8" LONG	6063-T5 ALUMINUM	OBE	USED @ 42
64.	D-243-01	STILE REINFORCEMENT SLEEVE	3.375" X 1.480" X .093"X 5.26LG	6063-T6 ALUMINUM	OBE	USED AT DOOR STILE SILL WITH REGENT HARDWARE AT 3'-6"x8'-0" & 7'-0"x8'-0" DOORS
65.	D-244-01	STILE REINFORCEMENT SLEEVE	3.109" X 1.480" X .093"X 5.26LG	6063-T6 ALUMINUM	OBE	USED AT DOOR STILE SILL WITH REGENT HARDWARE AT 3'-6"x8'-0" & 7'-0"x8'-0" DOORS
66.	D-247-01	STILE REINFORCEMENT SLEEVE	3.364" X 1.480" X .104"X 5.26LG	6063-T6 ALUMINUM	OBE	USED AT DOOR STILE SILL WITH REGENT HARDWARE AT 3'-6"x8'-0" & 7'-0"x8'-0" DOORS
67.	D-13	WIDE STILE WS-500	5.000" X 1.75" X .125"	6063-T5	OBE	
68.	D-25	INACTIVE MEETING WIDE STILE WS-500	5.000" X 1.75" X .125"	6063-T5	OBE	
69.	D-70	ACTIVE MEETING WIDE STILE WS-500	4.863" X 1.75" X .125"	6063-T5	OBE	
70.	FG-5196	POCKET FILLER FOR FG-5000	4.660" X 1.392" X .080"	6063-T5	OBE	
71.	FG-5179	POCKET FILLER FOR FG-5100	4.660" X 1.392" X .080"	6063-T5	OBE	
72.	FG-5217	POCKET FILLER FOR FG-5100T	4.660" X 1.030" X .094"	6063-T5	OBE	
73.	FG-5178	HEAD/TRANSOM HEADER	2.500" X 4.980" X VARIES	6063-T6 ALUMINUM	OBE	FOR FG-5100,FG-5100T SYSTEMS. AT 3'-6"x8'-0" & 7'-0"x8'-0" DOORS
74.	FG-5177	GLASS STOP	1.390" X 1.636" X .078"	6063-T6 ALUMINUM	OBE	FOR FG-5100,FG-5100T SYSTEMS. AT 3'-6"x8'-0" & 7'-0"x8'-0" DOORS
75.	MODEL H 6.5	INSULATING GLASS UNIT SPACER	1/2" or 3/8" WIDE X 1/4" HIGH x 0.014" THK.	3105-H24 ALUM. ALLOY	VARIES	SEE GLASS SCHEDULE

NOTE: ITEMS # 48, 49, 54, 55 AND 61 ARE NOT PART OF THE BILL OF MATERIALS.

FLORIDA BUILDING CODE (HIGH VELOCITY HURRICANE ZONE)

SERIES MSD-375 (MEDIUM) & WSD-500 (WIDE) STILE ALUMINUM ENTRANCE DOOR (WET GLAZED) LARGE & SMALL MISSILE IMPACT

M.L. DRAWN BY:

08/10/16 DATE:

16-093 DRAWING No.

SHEET 5 OF 32

Oldcastle BuildingEnvelope®
803 AIRPORT RD. TERRELL TX 75160
www.OldcastleBE.com-Phone 800-869-4567

REV. NO	DESCRIPTION	DATE
1	MDC COMMENTS	4/12/17
2		
3		
4		

©2016 TILTECO, INC.

TILTECO INC.
TILLIT TESTING & ENGINEERING COMPANY
6355 N.W. 36th St., VIRGINIA GARDENS, FL 33166
Phone : (305)871-6335, FAX : (305)871-1531
EB-0006719
WALTER A. TILLIT Jr. P.E.
FLORIDA Lic. # 44167

WALTER A. TILLIT JR. LICENSE No. 44167 STATE OF FLORIDA PROFESSIONAL ENGINEER

Approved as complying with the Florida Building Code
Date 5/18/17
NOA# 16-1213.02
Miami Dade Product Control
By Ishaq I. Hamid

HARDWARE SCHEDULE 3'-6" X 8'-0" (Max.) SINGLE MSD-375 & WSD-500 DOORS

HARDWARE TYPE	HARDWARE MODEL AND DESCRIPTION	MANUFACTURER	MAX. DESIGN PRESSURE	MAX. DOOR SIZE	NOTES
3-POINT LOCK	MS 1850 DEADLOCK AT 39" A.F.F. + 4015 THRESHOLD BOLT + 4016 HEADER BOLT	ADAMS RITE	+70 / -80 PSF	3'-6" X 8'-0"	REQUIRES 1 3/8" THROW AT THRESHOLD/HEADER BOLTS, INCLUDES SERIES MS 4000, 4001 & 4002 DEAD LOCK STRIKES
RIM PANIC	ED4200S RIM PANIC W/ 650F31 STRIKE	CORBIN RUSSWIN	+60 / -60 PSF	3'-6" X 8'-0"	
CONCEALED PANIC	1285 CONCEALED VERTICAL ROD PANIC W/ 301084 STRIKE PACKAGE (TOP & BOTTOM)	JACKSON	+70 / -80 PSF	3'-6" X 8'-0"	
CONCEALED PANIC	2086 CONCEALED VERTICAL ROD PANIC W/ 30-413 STRIKE PLATE W/ HUMP	JACKSON	+70 / -80 PSF	3'-6" X 8'-0"	
CONCEALED PANIC	5770 CONCEALED VERTICAL ROD PANIC W/ 57-SK10 STRIKE (TOP & BOTTOM)	REGENT	+70 / -80 PSF	3'-6" X 8'-0"	ONLY ALLOWED TO BE USED FOR MEDIUM STILES ⑤, ⑦ & ⑩
CONCEALED PANIC	8410 CONCEALED VERTICAL ROD PANIC W/ 640 STRIKE (TOP & BOTTOM)	SARGENT	+70 / -80 PSF	3'-6" X 8'-0"	
RIM PANIC	AD8500 RIM PANIC W/ 657 STRIKE	SARGENT	+60 / -60 PSF	3'-6" X 8'-0"	
SURFACE PANIC	9927 SURFACE PANIC VERTICAL ROD W/ 299 STRIKE (AT TOP), 284L-4 STRIKE (AT BOTTOM W/ THRESHOLD) & 304L (AT BOTTOM W/O THRESHOLD, GROUTED INTO FLOOR)	VON DUPRIN	+70 / -80 PSF	3'-6" X 8'-0"	
CONCEALED PANIC	9947 CONCEALED PANIC VERTICAL ROD W/ 338 (AT TOP) & 385A (@ BOTTOM)	VON DUPRIN	+70 / -80 PSF	3'-6" X 8'-0"	
SURFACE CLOSER	MODEL VARIES BY MANUFACTURER	VARIES	N/A	N/A	
CONCEALED CLOSER	21-211 HVY DUTY W/OFFSET SWING ARM	JACKSON	N/A	N/A	
BUTT HINGES 4" X 4 1/2"	4001 BALL BEARING STAINLESS STEEL	REGENT	+70 / -80 PSF	3'-6" X 8'-0"	(3) PER DOOR LEAF
BUTT HINGES 4" X 4 1/2"	RCTA2314 BALL BEARING STAINLESS	MC KINNEY	+60 / -60 PSF	3'-6" X 8'-0"	(3) PER DOOR LEAF
PULL HANDLES	PH-20 FORMED ALUMINUM OR SIMILAR	OBE	N/A	N/A	
PUSH BARS	PB-21 FORMED ALUMINUM OR SIMILAR	OBE	N/A	N/A	
CYLINDER	CY-1 LOCK CYLINDER	OBE	N/A	N/A	
KEY CONTROL	106 KEY CONTROL FOR SARGENT	SARGENT	N/A	N/A	
THUMB TURN	CY-3	OBE	N/A	N/A	
CYLINDER	CY-5 FOR VON DUPRIN DEVICES	OBE	N/A	N/A	
LOCK INDICATOR	AR-4089 OPTIONAL DEVICE	ADAMS RITE	N/A	N/A	
PANIC STOP	D-134-2 LOCATED AT THRESHOLD	OBE	N/A	N/A	
THRESHOLD	TH-57 COMPONENT (24)	OBE	+70 / -80 PSF	3'-6" X 8'-0"	
DOOR BOTTOM SWEEP	D-118 / D120	OBE	N/A	N/A	
TOP PIVOTS	OP-6 / OP-7	OBE	+70 / -80 PSF	3'-6" X 8'-0"	
INTERMEDIATE PIVOTS	M-19	RIXON	+70 / -80 PSF	3'-6" X 8'-0"	
BOTTOM PIVOTS	OP-9 / OP-10	OBE	+70 / -80 PSF	3'-6" X 8'-0"	
CONT. GEAR HINGE	780-224 HD CONTINUOUS GEAR HINGES	ROTON	+70 / -80 PSF	3'-6" X 8'-0"	
THRESHOLD	TH-43	OBE	+70 / -80 PSF	3'-6" X 8'-0"	

FLORIDA BUILDING CODE (HIGH VELOCITY HURRICANE ZONE)

SERIES MSD-375 (MEDIUM) & WSD-500 (WIDE)
STILE ALUMINUM ENTRANCE DOOR (WET GLAZED)
LARGE & SMALL MISSILE IMPACT

M.L. DRAWN BY:
08/10/16 DATE:
16-093 DRAWING No.
SHEET 6 OF 32

Oldcastle BuildingEnvelope®
803 AIRPORT RD. TERRELL TX 75160
www.OldcastleBE.com-Phone 800-869-4567

REV. NO	DESCRIPTION	DATE
1	WDC COMMENTS	4/12/17
2		
3		
4		

©2016 TILTECO, INC.

TILLIT TESTING & ENGINEERING COMPANY
6355 N.W. 36th St. Suite 505 Virginia Gardens, FL 33166
Phone : (305)871-1530 Fax : (305)871-1531
EB-0006719
WALTER A. TILLIT Jr. P.E.
FLORIDA Lic. # 44167

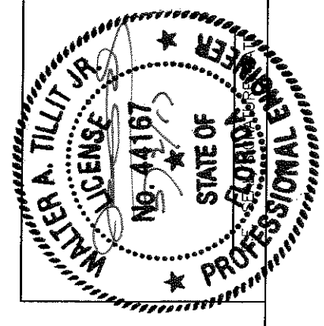

Approved as complying with the
Florida Building Code
Date 5/18/17
NOA# 16-1213.02
Miami Dade Product Control
By Ishaq I. Chanda

HARDWARE SCHEDULE 7'-0" X 8'-0" (Max.) PAIRS MSD-375 & WSD-500 DOORS

HARDWARE TYPE	HARDWARE MODEL AND DESCRIPTION	MANUFACTURER	MAX. DESIGN PRESSURE	MAX. DOOR SIZE	NOTES
3-POINT LOCK	MS 1850 DEADLOCK AT 39" A.F.F. + 4015 THRESHOLD BOLT + 4016 HEADER BOLT	ADAMS RITE	+70 / -80 PSF	7'-0" X 8'-0"	ACTIVE DOOR. REQUIRES 1 3/8" THROW AT THRESHOLD/HEADER BOLTS, INCLUDES SERIES MS 4000, 4001 & 4002 DEAD LOCK STRIKES
FLUSH BOLTS	FB-1201-VRM TOP & BOTTOM-STEEL TIPS	OBE	+70 / -80 PSF	7'-0" X 8'-0"	INACTIVE DOOR
RIM PANIC	ED4200S RIM PANIC W/ 650F31 STRIKE	CORBIN RUSSWIN	+60 / -60 PSF	7'-0" X 8'-0"	
REMOVABLE MULLION	WS708AKM REMOVABLE MULLION	CORBIN RUSSWIN	+60 / -60 PSF	7'-0" X 8'-0"	TO BE USED WITH ED4200S RIM DEVICE EXCLUSIVELY
CONCEALED PANIC	1285 CONCEALED VERTICAL ROD PANIC W/ 301084 STRIKE PACKAGE (TOP & BOTTOM)	JACKSON	+70 / -80 PSF	7'-0" X 8'-0"	
CONCEALED PANIC	2086 CONCEALED VERTICAL ROD PANIC W/ 30-413 STRIKE PLATE W/ HUMP	JACKSON	+70 / -80 PSF	7'-0" X 8'-0"	
CONCEALED PANIC	5770 CONCEALED VERTICAL ROD PANIC W/ 57-SK10 STRIKE (TOP & BOTTOM)	REGENT	+70 / -80 PSF	7'-0" X 8'-0"	ONLY ALLOWED TO USED FOR MEDIUM STILES ⑤, ⑦ & ⑩
CONCEALED PANIC	8410 CONCEALED VERTICAL ROD PANIC W/ 640 STRIKE (TOP & BOTTOM)	SARGENT	+70 / -80 PSF	7'-0" X 8'-0"	
RIM PANIC	AD8500 RIM PANIC W/ 657 STRIKE	SARGENT	+60 / -60 PSF	7'-0" X 8'-0"	
REMOVABLE MULLION	HC L980 REMOVABLE MULLION W/ 656 STRIKE	CORBIN RUSSWIN	+60 / -60 PSF	7'-0" X 8'-0"	TO BE USED WITH AD8500 RIM DEVICE EXCLUSIVELY
SURFACE PANIC	9927 SURFACE PANIC VERTICAL ROD W/ 299 STRIKE (AT TOP), 284L-4 STRIKE (AT BOTTOM W/ THRESHOLD) & 304L (AT BOTTOM W/O THRESHOLD, GROUTED INTO FLOOR)	VON DUPRIN	+70 / -80 PSF	7'-0" X 8'-0"	
CONCEALED PANIC	9947 CONCEALED PANIC VERTICAL ROD W/ 338 (@ TOP) & 385A (@ BOTTOM)	VON DUPRIN	+70 / -80 PSF	7'-0" X 8'-0"	
SURFACE CLOSER	MODEL VARIES BY MANUFACTURER	VARIES	N/A	N/A	
CONCEALED CLOSER	21-211 HVY DUTY W/OFFSET SWING ARM	JACKSON	N/A	N/A	
BUTT HINGES 4" X 4 1/2"	4001 BALL BEARING STAINLESS STEEL	REGENT	+70 / -80 PSF	7'-0" X 8'-0"	(3) PER DOOR LEAF
BUTT HINGES 4" X 4 1/2"	RCTA2314 BALL BEARING STAINLESS	MC KINNEY	+60 / -60 PSF	3'-6" X 8'-0"	(3) PER DOOR LEAF
PULL HANDLES	PH-20 FORMED ALUMINUM	OBE	N/A	N/A	
PUSH BARS	PB-21 FORMED ALUMINUM	OBE	N/A	N/A	
CYLINDER	CY-1 LOCK CYLINDER	OBE	N/A	N/A	
KEY CONTROL	106 KEY CONTROL FOR SARGENT	SARGENT	N/A	N/A	
THUMB TURN	CY-3	OBE	N/A	N/A	
CYLINDER	CY-5 FOR VON DUPRIN DEVICES	OBE	N/A	N/A	
LOCK INDICATOR	AR-4089 OPTIONAL DEVICE	ADAMS RITE	N/A	N/A	
PANIC STOP	D-134-2 LOCATED AT THRESHOLD	OBE	N/A	N/A	
THRESHOLD	TH-57 COMPONENT ㉔	OBE	+70 / -80 PSF	7'-0" X 8'-0"	
DOOR BOTTOM SWEEP	D-118 / D120	OBE	N/A	N/A	
TOP PIVOTS	OP-6 / OP-7	OBE	+70 / -80 PSF	7'-0" X 8'-0"	
INTERMEDIATE PIVOTS	M-19	RIXON	+70 / -80 PSF	7'-0" X 8'-0"	
BOTTOM PIVOTS	OP-9 / OP-10	OBE	+70 / -80 PSF	7'-0" X 8'-0"	
CONT. GEAR HINGE	780-224 HD CONTINUOUS GEAR HINGES	ROTON	+70 / -80 PSF	7'-0" X 8'-0"	
THRESHOLD	TH-43	OBE	+70 / -80 PSF	7'-0" X 8'-0"	

FLORIDA BUILDING CODE (HIGH VELOCITY HURRICANE ZONE)

SERIES MSD-375 (MEDIUM) & WSD-500 (WIDE) STILE ALUMINUM ENTRANCE DOOR (WET GLAZED) LARGE & SMALL MISSILE IMPACT

M.L. DRAWN BY:

08/10/16 DATE:

16-093 DRAWING No.

SHEET 7 OF 32

Oldcastle BuildingEnvelope™
803 AIRPORT RD. TERRELL TX 75160
www.OldcastleBE.com-Phone 800-869-4567

REV. NO	DESCRIPTION	DATE
1	MDC COMMENTS	4/12/17
2		
3		
4		

©2016 TILTECO, INC.

TILLIT TESTING & ENGINEERING COMPANY INC.
6355 N.W. 36th. St. Ste. 305 VIRGINIA GARDENS, FL 33166
Phone : (305)871-1530 , Fax : (305)871-1531
EB-0006719
WALTER A. TILLIT Jr. P.E.
FLORIDA Lic. # 44167

WALTER A. TILLIT JR. LICENSE No. 44167 STATE OF FLORIDA PROFESSIONAL ENGINEER

Approved as complying with the Florida Building Code
Date 5/8/17
NOA# 16-1213.02
Miami Dade Product Control
By

REMOVABLE MULLION ASSEMBLY DETAILS FOR SARGENT & CORBIN RUSSWIN EXIT DEVICES: MAX. A.S.D DESIGN PRESSURE RATING IS +60, -60 psf. FOR THESE EXIT DEVICES TO BE USED ONLY AT 3'-6"x8'-0" SINGLE OR 7'-0"x8'-0" PAIR OF DOORS

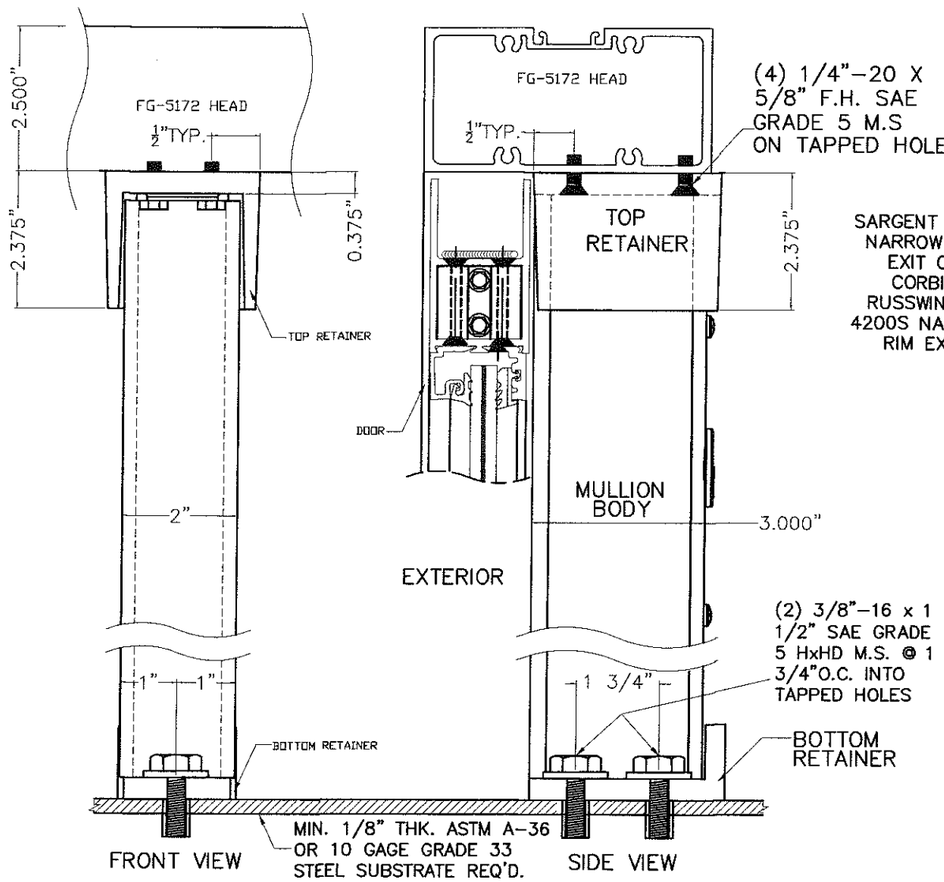

SARGENT HC L980 REMOVABLE MULLION OR CORBIN RUSSWIN KRM 200 FWS REMOVABLE MULLION

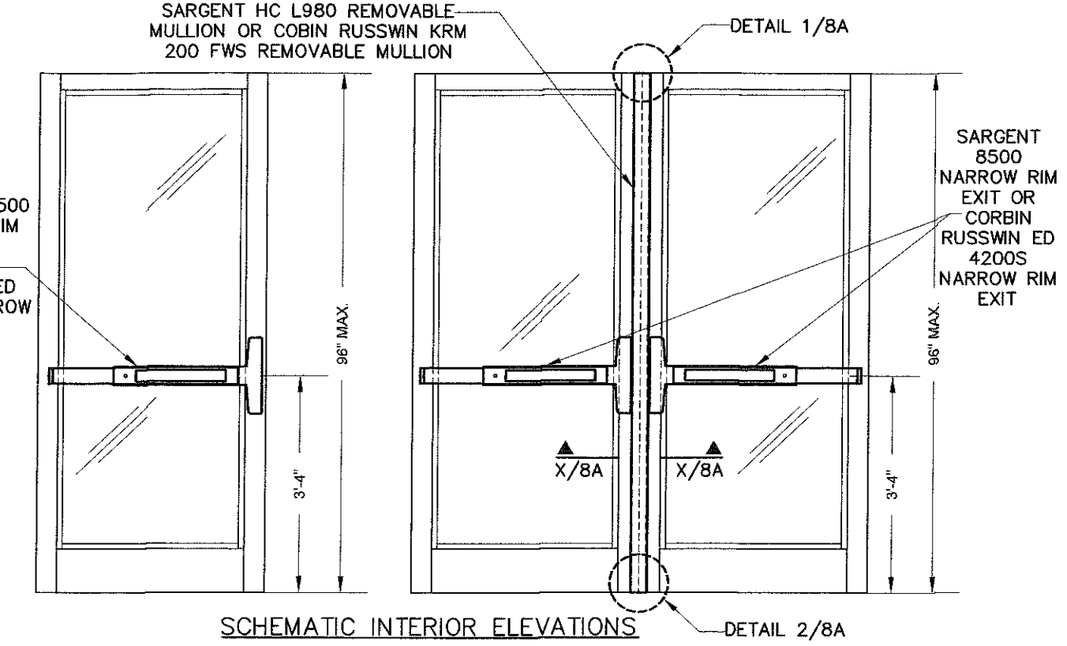

SCHEMATIC INTERIOR ELEVATIONS

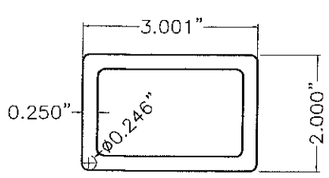

REMOVABLE MULLIONS
HC-L980HC & KRM 200 FWS

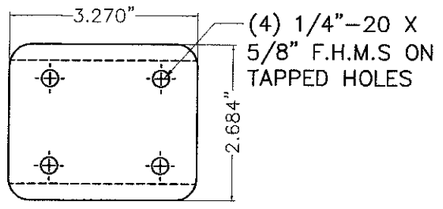

BOTTOM VIEW OF TOP RETAINER

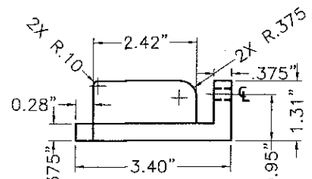

BOTTOM RETAINER
SIDE VIEW

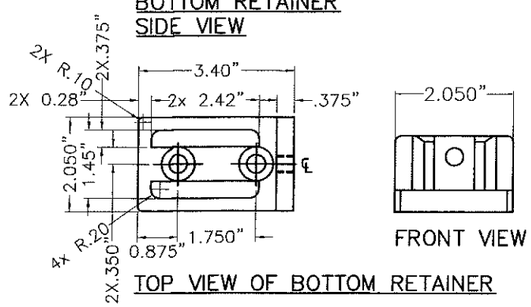

TOP VIEW OF BOTTOM RETAINER

FRONT VIEW

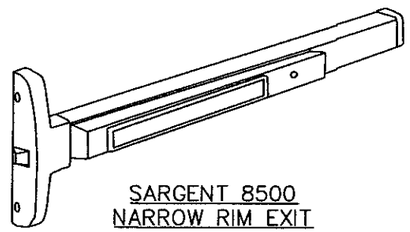

SARGENT 8500
NARROW RIM EXIT

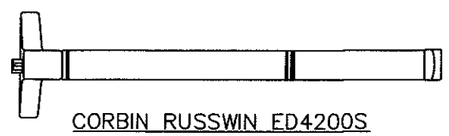

CORBIN RUSSWIN ED4200S
NARROW RIM EXIT

NOTES:
1. FRACTIONAL DIMENSION TOLERANCE 1/64".
2. OUTSIDE DIMENSIONS ARE MAX PART SIZE.
3. MOUNTING HOLES TO BE PREPARED AT INSTALLATION.

MATERIALS:
MULLION BODY - CARBON STEEL
HOT ROLLED, WELDED SEAM
PER ASTM A500 GRADE B
FINISH: PRIME COAT RED PAINT
TOP & BOTTOM RETAINER - CAST IRON, PRIMED.

FLORIDA BUILDING CODE (HIGH VELOCITY HURRICANE ZONE)

SERIES MSD-375 (MEDIUM) & WSD-500 (WIDE)
STILE ALUMINUM ENTRANCE DOOR (WET GLAZED)
LARGE & SMALL MISSILE IMPACT

M.L. DRAWN BY:
08/10/16 DATE:
16-093 DRAWING No.
SHEET 8 OF 32

Oldcastle BuildingEnvelope®
803 AIRPORT RD. TERRELL TX 75160
www.OldcastleBE.com-Phone 800-869-4567

REV. NO	DESCRIPTION	DATE
1	MDC COMMENTS	4/12/17
2		
3		
4		

©2016 TILTECO, INC.

TILLIT TESTING & ENGINEERING COMPANY
6355 N.W. 36th St., Suite 305 VIRGINIA GARDENS, FL 33166
Phone : (305)871-1530 Fax : (305)871-1531
EB-0006719
WALTER A. TILLIT Jr. P.E.
FLORIDA Lic. # 44167

WALTER A. TILLIT JR. LICENSE No. 44167 STATE OF FLORIDA PROFESSIONAL ENGINEER

Approved as complying with the Florida Building Code
Date 5/18/17
NOA# 16-1213.02
Miami Dade Product Control
By Ishaq I. Chanda

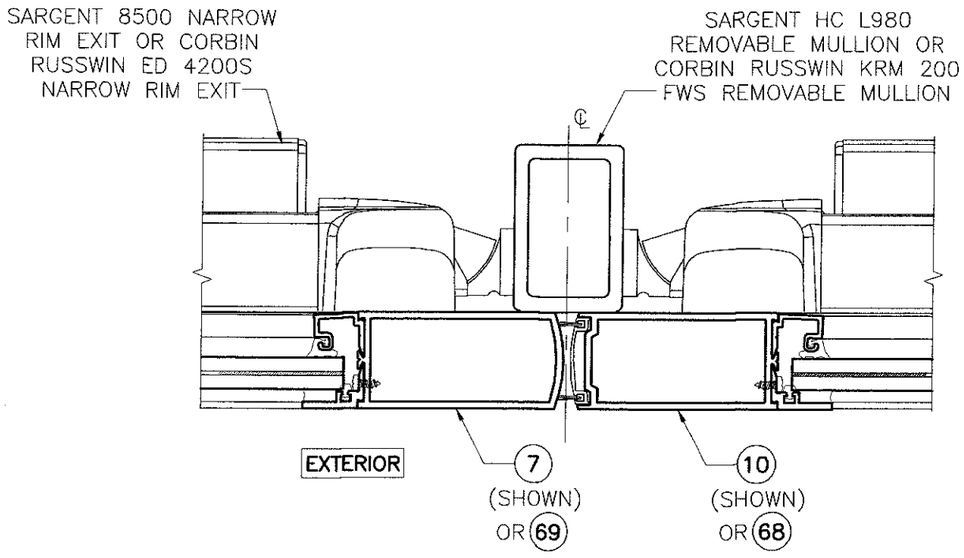

SECTION X–X
SARGENT HC L980 REMOVABLE MULLION OR CORBIN RUSSWIN KRM 200 FWS REMOVABLE MULLION DETAIL
(PLAN)

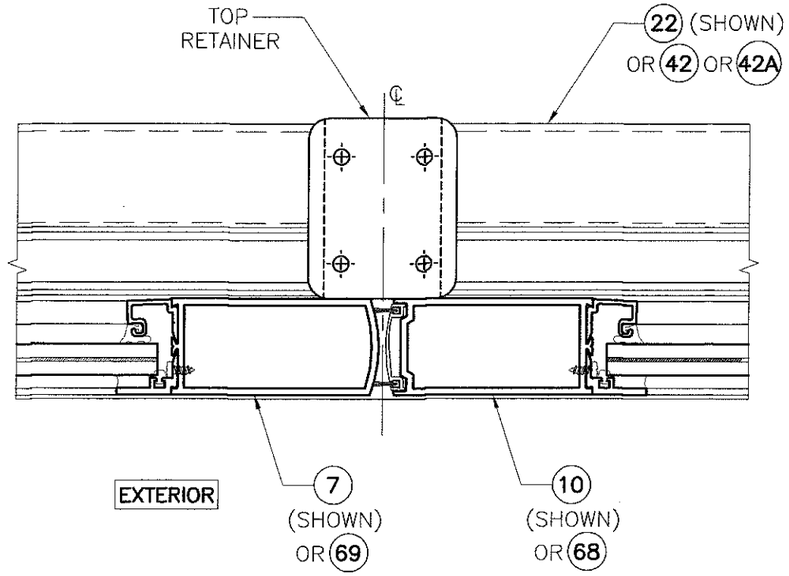

REMOVABLE MULLION CONNECTION AT TOP: DETAIL 1
(PLAN)

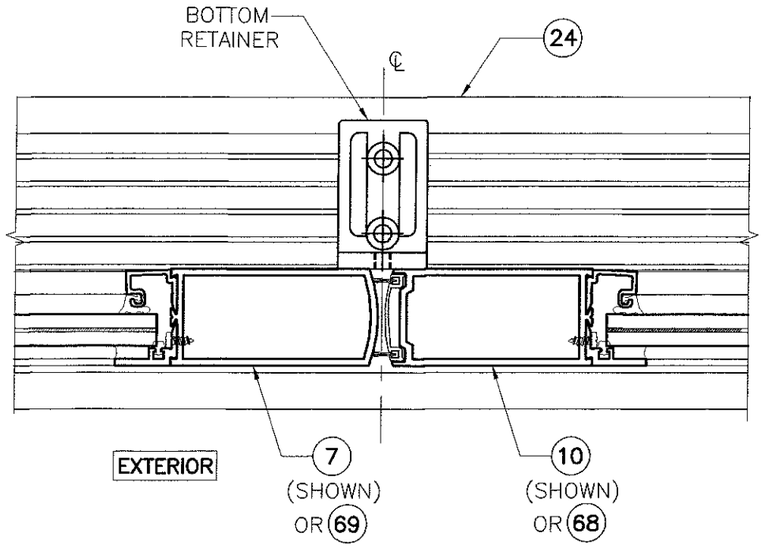

REMOVABLE MULLION CONNECTION AT BOTTOM: DETAIL 2
(PLAN)

FLORIDA BUILDING CODE (HIGH VELOCITY HURRICANE ZONE)

SERIES MSD-375 (MEDIUM) & WSD-500 (WIDE)
STILE ALUMINUM ENTRANCE DOOR (WET GLAZED)
LARGE & SMALL MISSILE IMPACT

M.L.
DRAWN BY:

08/10/16
DATE:

16-093
DRAWING No.

SHEET 8A OF 32

Oldcastle BuildingEnvelope™
803 AIRPORT RD. TERRELL TX 75160
www.OldcastleBE.com-Phone 800-869-4567

REV. NO	DESCRIPTION	DATE	REV. No	DESCRIPTION	DATE
1	MDC COMMENTS	4/12/17	3		
2			4		

©2016 TILTECO, INC.

TILTECO INC.
TILLIT TESTING & ENGINEERING COMPANY
6355 N.W. 36th. St., Ste. 305, VIRGINIA GARDENS, Fl. 33166
Phone : (305)871-1530 . Fax : (305)871-1531
EB-0006719
WALTER A. TILLIT Jr. P.E.
FLORIDA Lic. # 44167

WALTER A. TILLIT JR. LICENSE No. 44167 STATE OF FLORIDA PROFESSIONAL ENGINEER

Approved as complying with the Florida Building Code
Date 5/18/17
NOA# 16-1213.02
Miami Dade Product Control
By [signature]

GENERIC CONCEALED VERTICAL ROD PANIC: SCHEMATIC SECTIONS & ELEVATIONS. MAX. A.S.D. DESIGN PRESSURE RATING IS +70, -80 psf., TO BE USED ONLY AT 3'6"x8'-0" OR 7'-0"x8'-0" PAIR OF DOORS.

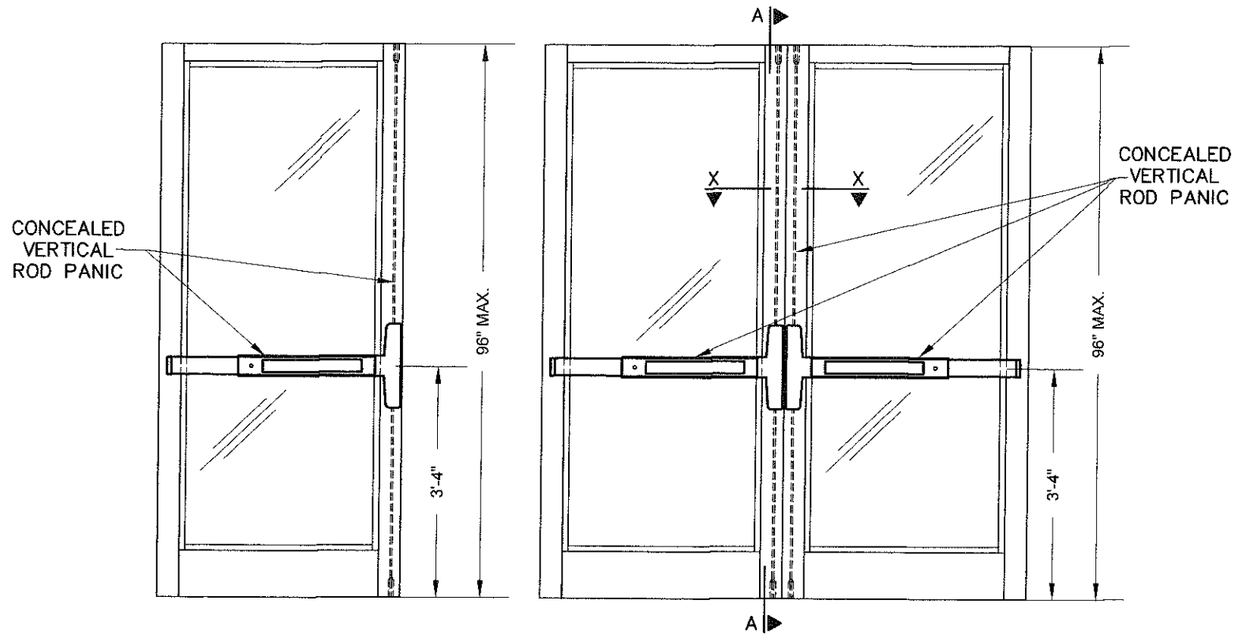

CONCEALED VERTICAL ROD PANIC
SCHEMATIC INTERIOR ELEVATIONS

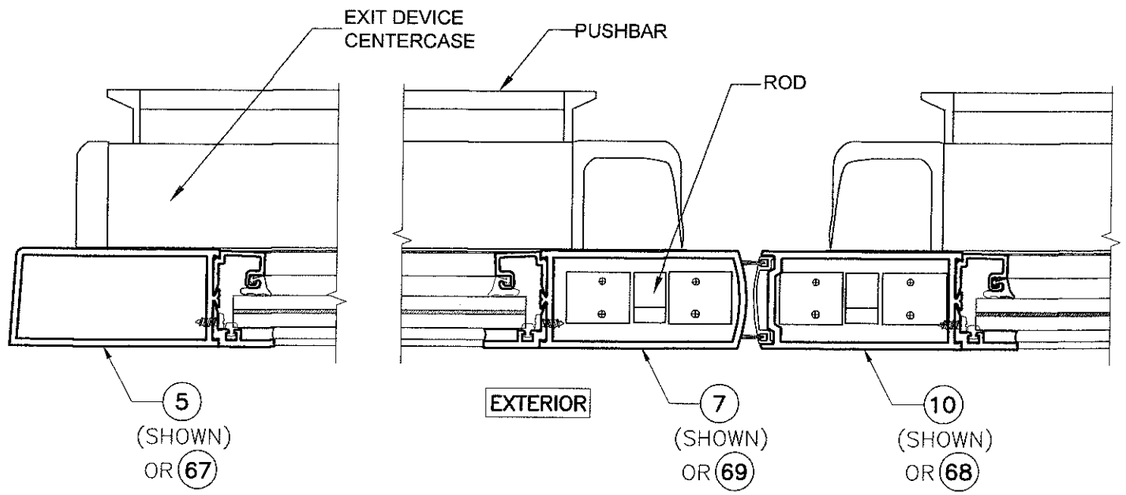

SECTION X-X: CONCEALED VERTICAL ROD

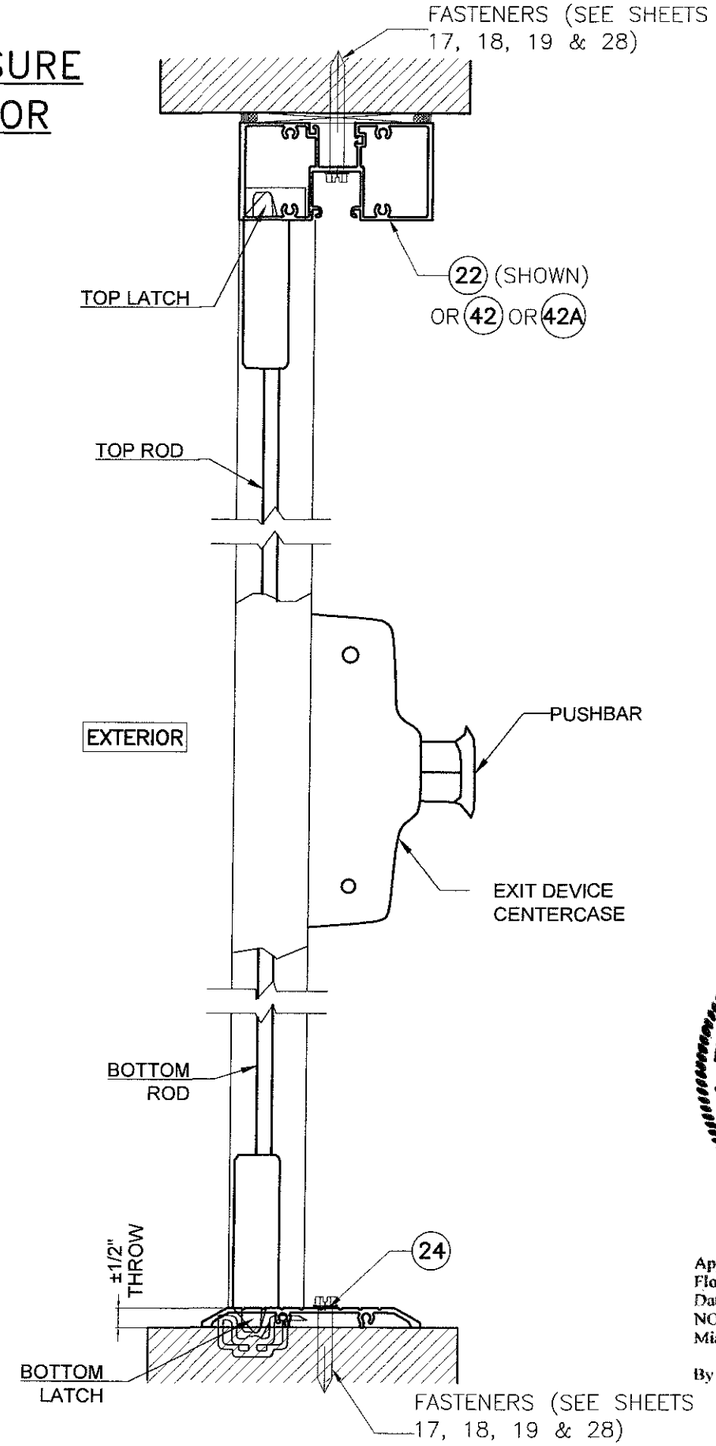

CONCEALED VERTICAL ROD
VERTICAL SECTION A-A

FLORIDA BUILDING CODE (HIGH VELOCITY HURRICANE ZONE)

SERIES MSD-375 (MEDIUM) & WSD-500 (WIDE) STILE ALUMINUM ENTRANCE DOOR (WET GLAZED) LARGE & SMALL MISSILE IMPACT

M.L.
DRAWN BY:
08/10/16
DATE:
16-093
DRAWING No.
SHEET 8B OF 32

Oldcastle BuildingEnvelope™
803 AIRPORT RD. TERRELL TX 75160
www.OldcastleBE.com-Phone 800-869-4567

REV. NO	DESCRIPTION	DATE	REV. No	DESCRIPTION	DATE
1	MDC COMMENTS	4/12/17	3		
2			4		

©2016 TILTECO, INC.

TILTECO INC.
TILLIT TESTING & ENGINEERING COMPANY
6355 N.W. 36th St., Ste. 305, VIRGINIA GARDENS, Fl. 33166
Phone : (305)871-1530 . Fax : (305)871-1531
EB-0006719
WALTER A. TILLIT Jr. P.E.
FLORIDA Lic. # 44167

WALTER A. TILLIT JR. LICENSE No. 44167 STATE OF FLORIDA PROFESSIONAL ENGINEER

Approved as complying with the Florida Building Code
Date 5/18/17
NOA# 16-1213.02
Miami Dade Product Control
By [signature]

TYPICAL GLAZING DETAILS AT 3'-6" X 8'-0" OR 7'-0" X 8'-0" (Max.) DOORS

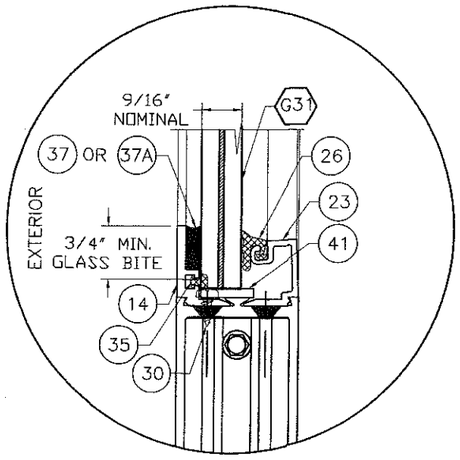

GLASS TYPE G31

SCALE: 1/2" = 1"

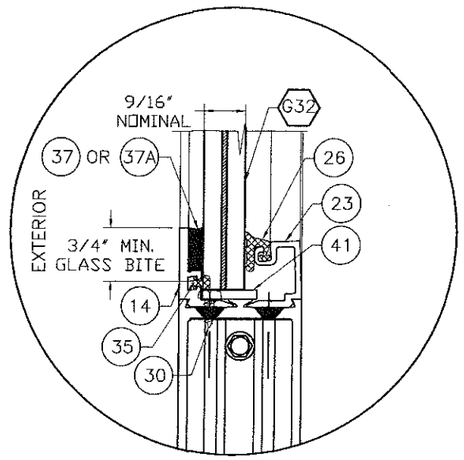

GLASS TYPE G32

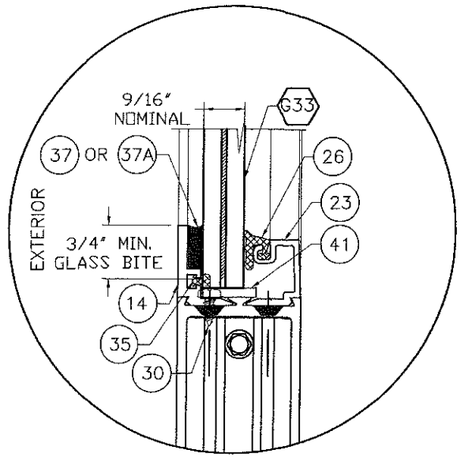

GLASS TYPE G33

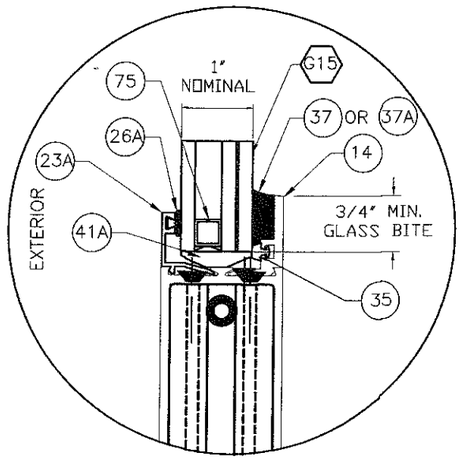

GLASS TYPE G15

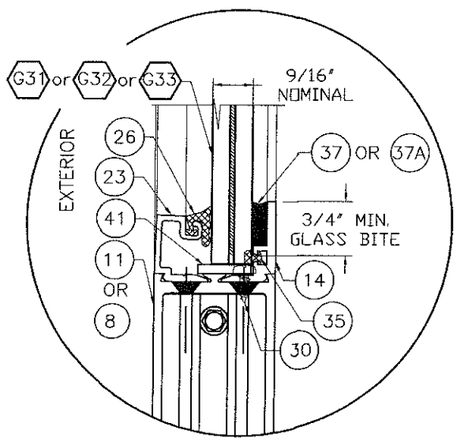

APPLICABLE ALTERNATE DETAIL WITH DOOR LAMINATED GLASS STOPS REVERSED FOR ALL GLASS TYPES

GLASS SCHEDULE FOR 3'-6"x8'-0" OR 7'-0"x8'-0" DOORS *

GLASS LABEL	GLASS COMPOSITION	INTERLAYER MANUFACTURER NAME	MAXIMUM D.L.O.	MAX. ASD DESIGN PRESSURE RATING FOR GLASS (P.S.F) W/ 37 SILICONE	MAX. ASD DESIGN PRESSURE RATING FOR GLASS (P.S.F) W/ 37A SILICONE
G31	9/16" NOMINAL THICKNESS LAMINATED GLASS CONSISTING OF TWO 1/4" H.S. GLASS, AND A 0.090" SAFLEX PVB INTERLAYER	EASTMAN CHEMICAL COMPANY	32 5/16" W x 82 3/16" H	+70, -80	+70, -70
G32	9/16" NOMINAL THICKNESS LAMINATED GLASS CONSISTING OF TWO 1/4" H.S. GLASS, AND A 0.100" SAFLEX PVB INTERLAYER	EASTMAN CHEMICAL COMPANY		+70, -80	+70, -70
G33	9/16" NOMINAL THICKNESS LAMINATED GLASS CONSISTING OF TWO 1/4" H.S. GLASS, AND A 0.075" SAFLEX C.P. W/ PET CORE GLASS INTERLAYER	EASTMAN CHEMICAL COMPANY		+70, -80	+70, -70
G15	1" NOMINAL THICKNESS INSULATED GLASS CONSISTING OF 3/16" TEMPERED GLASS OB , 5/16" SPACER & 3/16" H.S. GLASS OVER 0.075" SAFLEX C.P. W/ PET CORE GLASS INTERLAYER OVER 3/16" H.S. GLASS	EASTMAN CHEMICAL COMPANY		+70, -70	+70, -70

TYPICAL DOOR GLASS SIZE= DLO +1 1/2"

* SEE SCHEDULE ON SHEET 1, FOR MAX. ASD PRESSURE RATING WHEN SPECIFIC HADWARE IS USED.

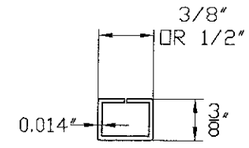

75 INSULATING GLASS UNIT SPACER

FLORIDA BUILDING CODE (HIGH VELOCITY HURRICANE ZONE)

SERIES MSD-375 (MEDIUM) & WSD-500 (WIDE) STILE ALUMINUM ENTRANCE DOOR (WET GLAZED) LARGE & SMALL MISSILE IMPACT

Oldcastle BuildingEnvelope
803 AIRPORT RD. TERRELL TX 75160
www.OldcastleBE.com-Phone 800-869-4567

REV. NO	DESCRIPTION	DATE	REV. No	DESCRIPTION	DATE
1	MDC COMMENTS	4/12/17	3		
2			4		

M.L.
DRAWN BY:
08/10/16
DATE:
16-093
DRAWING No.
SHEET 9 OF 32

©2016 TILTECO, INC.

TILTECO INC.
TILLIT TESTING & ENGINEERING COMPANY
3355 N.W. 36th St., Ste. 305, VIRGINIA GARDENS, Fl. 33166
Phone : (305)871-1530 Fax : (305)871-1531
EB-0006719
WALTER A. TILLIT Jr. P.E.
FLORIDA Lic. # 44167

WALTER A. TILLIT JR. LICENSE No. 44167 STATE OF FLORIDA PROFESSIONAL ENGINEER

Approved as complying with the Florida Building Code
Date 5/18/17
NOA# 16-1213.02
Miami Dade Product Control
By [signature]

TYPICAL GLAZING DETAILS FOR TRANSOMS
VALID ONLY FOR 3'-6"x8'-0" & 7'-0"x8'-0" SINGLE/PAIR OF DOORS RESPECTIVELY

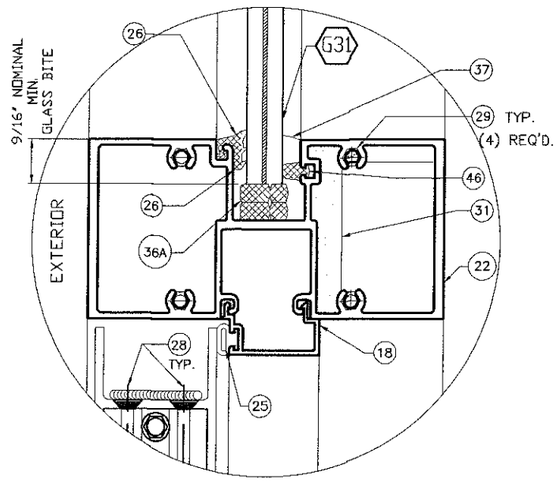

GLASS TYPE (G31)

SCALE: 1/2" = 1"

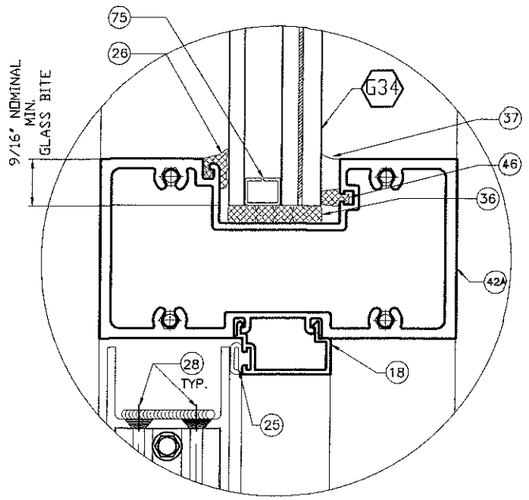

GLASS TYPE (G34)

SCALE: 1/2" = 1"

GLASS SCHEDULE FOR 3'-6"x8'-0" (MAX.) OR 7'-0"x8'-0" (MAX.) DOORS TRANSOMS				
GLASS LABEL	**GLASS COMPOSITION**	**INTERLAYER MANUFACTURER NAME**	**MAXIMUM D.L.O.**	**MAX. ASD DESIGN PRESSURE RATING FOR GLASS (P.S.F) W/ (37) SILICONE**
(G31)	9/16" NOMINAL THICKNESS LAMINATED GLASS CONSISTING OF TWO 1/4" H.S. GLASS, AND A 0.090" SAFLEX PVB INTERLAYER	EASTMAN CHEMICAL COMPANY	84 1/2" W x 19 1/4" H	+70, -80
(G34)	1 5/16" NOMINAL THICKNESS INSULATED LAMINATED GLASS CONSISTING OF TWO 1/4" H.S.-0.B + 1/2" AIR SPACE + 1/4" H.S. + 0.090" SAFLEX PVB INTERLAYER + 1/4" H.S.	EASTMAN CHEMICAL COMPANY		+70, -80

FLORIDA BUILDING CODE (HIGH VELOCITY HURRICANE ZONE)

SERIES MSD-375 (MEDIUM) & WSD-500 (WIDE)
STILE ALUMINUM ENTRANCE DOOR (WET GLAZED)
LARGE & SMALL MISSILE IMPACT

DRAWN BY: M.L.

DATE: 08/10/16

DRAWING No. 16-093

SHEET 10 OF 32

Oldcastle BuildingEnvelope™
800 AIRPORT RD. TERRELL TX 75160
www.OldcastleBE.com-Phone 800-869-4567

REV. NO	DESCRIPTION	DATE	REV. No	DESCRIPTION	DATE
1	MDC COMMENTS	4/12/17	3		
2			4		

©2016 TILTECO, INC.

TILLIT TESTING & ENGINEERING COMPANY
6355 N.W. 36th. St. Ste. 305, VIRGINIA GARDENS, FL. 33166
Phone : (305)871-1530 , Fax : (305)871-1531
EB-0006719
WALTER A. TILLIT Jr. P.E.
FLORIDA Lic. # 44167

WALTER A. TILLIT JR. LICENSE No. 44167 STATE OF FLORIDA PROFESSIONAL ENGINEER
SIGNATURE DATE

Approved as complying with the Florida Building Code
Date 5/15/17
NOA# 16-1213.02
Miami Dade Product Control
By Ishaq I. Chanda

TYPICAL PANEL ELEVATIONS FOR MSD-375 & WSD-500 IMPACT 3'-6"x8'-0" OR 7'-0"x8'-0"
SINGLE/PAIR OF DOORS (WET GLAZED)

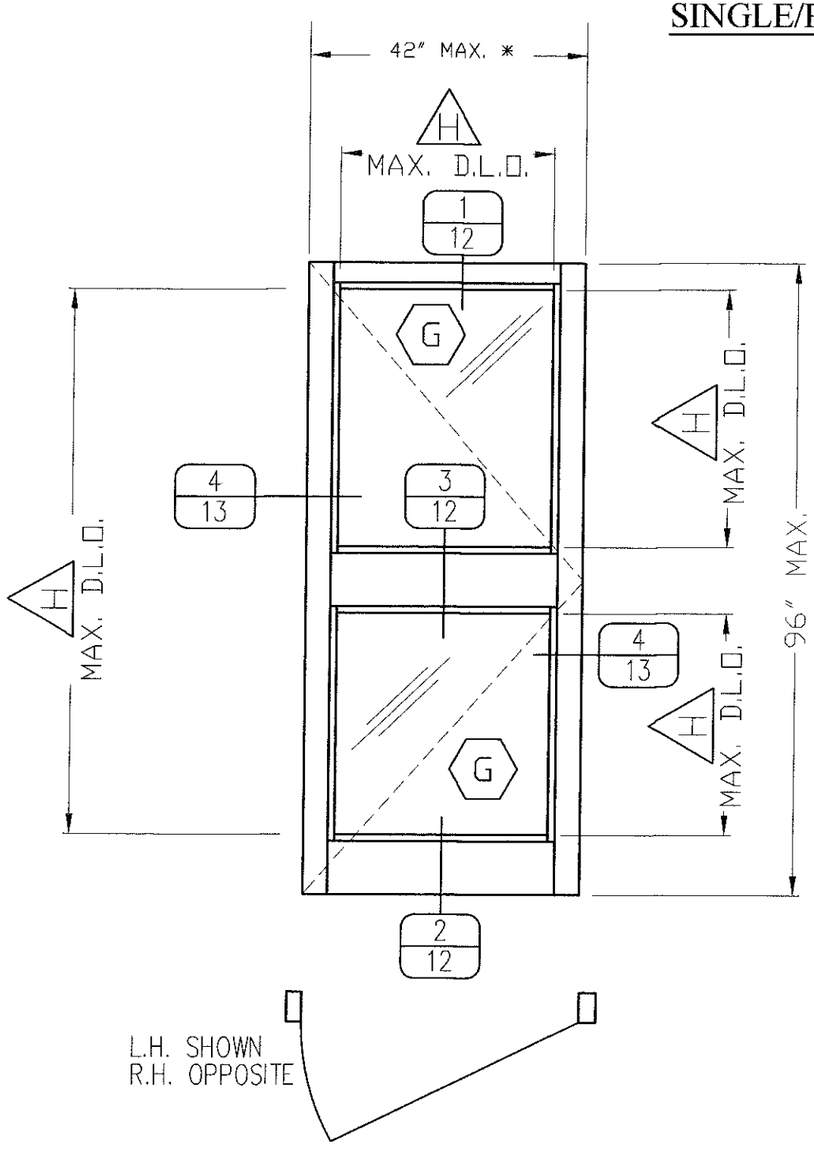

SINGLE PANEL
EXTERIOR ELEVATION

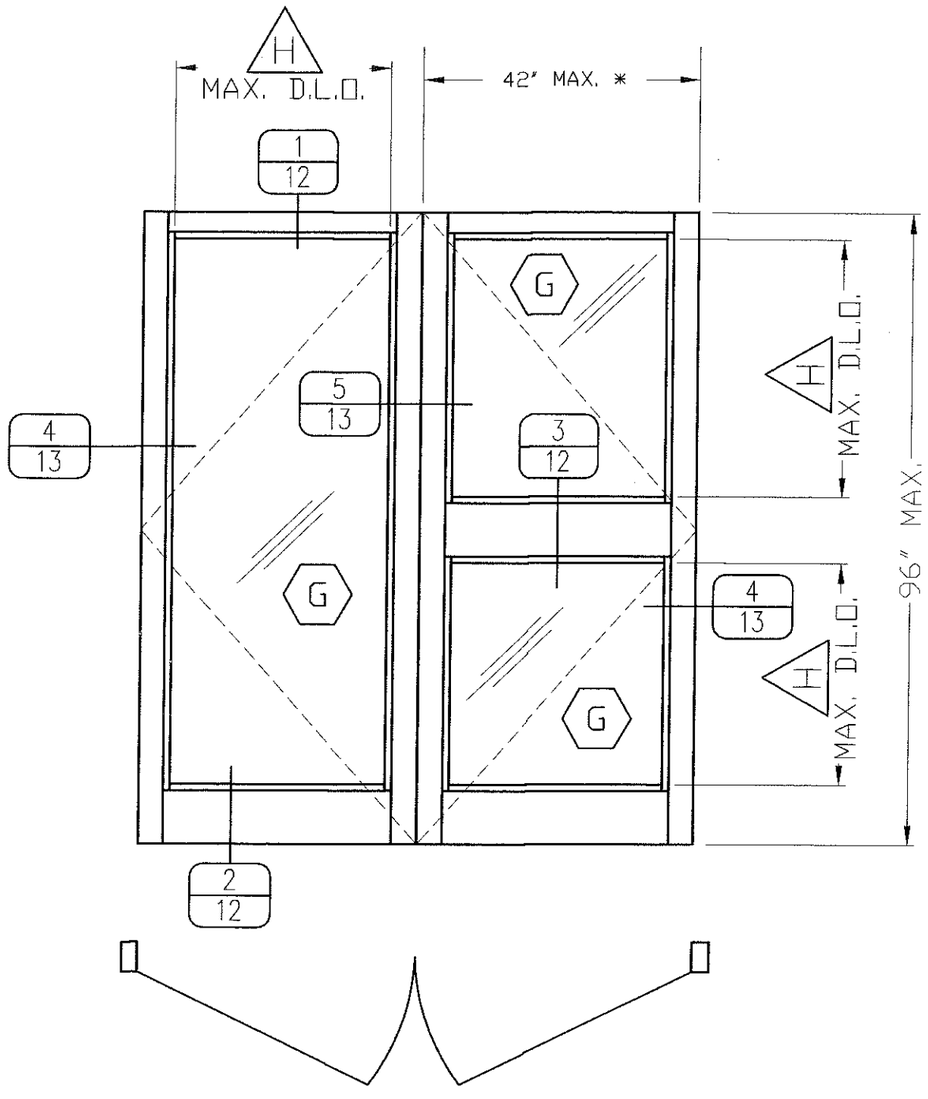

SINGLE PANEL
EXTERIOR ELEVATION

FOOT NOTES:

- (G) FOR GLAZING DETAILS AND GLASS SCHEDULE SEE SHEET 9.
- (H) FOR MAXIMUM DAYLIGHT OPENING (D.L.O.) SEE SCHEDULE ON SHEET 9.
- * SEE SCHEDULE ON SHEET 1 FOR LIMITATIONS ON MAX. A.S.D PRESSURE RATINGS, USABLE GLASS & HARDWARE.

FRAME WIDTH = PANEL WIDTH(S) + 5"
FRAME HEIGHT = PANEL HEIGHT + 2 1/2"

FLORIDA BUILDING CODE (HIGH VELOCITY HURRICANE ZONE)

SERIES MSD-375 (MEDIUM) & WSD-500 (WIDE)
STILE ALUMINUM ENTRANCE DOOR (WET GLAZED)
LARGE & SMALL MISSILE IMPACT

DRAWN BY: M.L.
DATE: 08/10/16
DRAWING No. 16-093
SHEET 11 OF 32

Oldcastle BuildingEnvelope®
803 AIRPORT RD. TERRELL, TX 75160
www.OldcastleBE.com-Phone 800-869-4567

REV. NO	DESCRIPTION	DATE
1	MDC COMMENTS	4/12/17
2		

REV. No	DESCRIPTION	DATE
3		
4		

©2016 TILTECO, INC.

TILTECO INC.
TILLIT TESTING & ENGINEERING COMPANY
6355 N.W. 36th. St., Ste. 305, VIRGINIA GARDENS, FL 33166
Phone : (305)871-1530, Fax : (305)871-1531
EB-0006719
WALTER A. TILLIT Jr. P.E.
FLORIDA Lic. # 44167

WALTER A. TILLIT JR. LICENSE No. 44167 STATE OF FLORIDA PROFESSIONAL ENGINEER

Approved as complying with the
Florida Building Code
Date 5/8/17
NOA# 16-1213.02
Miami Dade Product Control
By

DOOR'S TOP AND BOTTOM RAILS AND HORIZONTAL MID-RAIL DETAILS AT 3'-6"x8'-0" OR 7'-0"x8'-0" (MAX.) DOORS (SIDE VIEWS)

SCALE: 6" = 1'

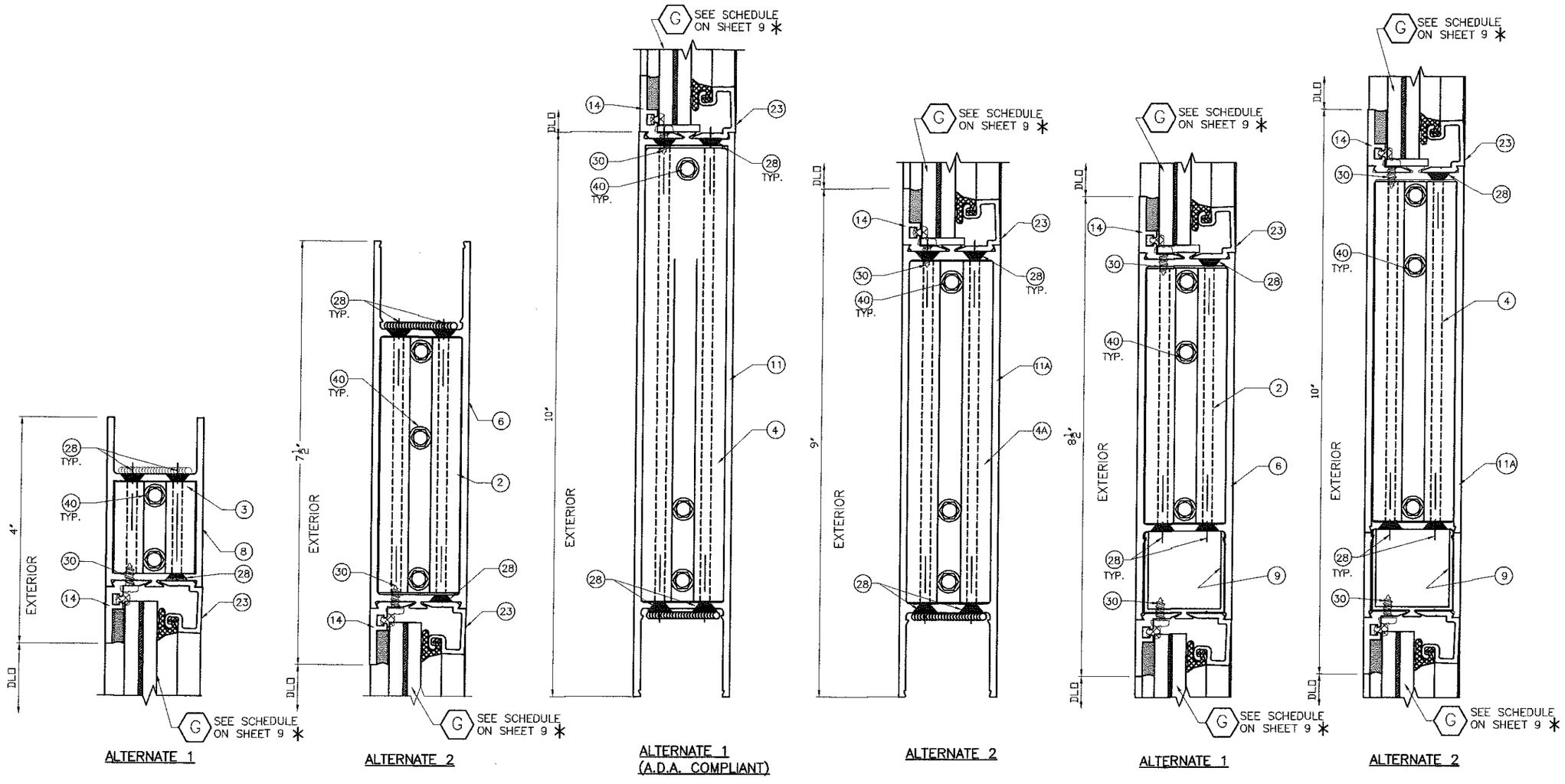

* LAMINATED GLASS SHOWN. SEE GLAZING DETAIL FOR ⟨G15⟩ INSULATED GLASS ON SHEET 9.

Approved as complying with the Florida Building Code
Date 5/19/17
NOA# 16-1213.02
Miami Dade Product Control
By

FLORIDA BUILDING CODE (HIGH VELOCITY HURRICANE ZONE)

SERIES MSD-375 (MEDIUM) & WSD-500 (WIDE)
STILE ALUMINUM ENTRANCE DOOR (WET GLAZED)
LARGE & SMALL MISSILE IMPACT

Oldcastle BuildingEnvelope®
803 AIRPORT RD. TERRELL TX 75160
www.OldcastleBE.com Phone 800-869-4567

REV. NO	DESCRIPTION	DATE
1		
2		
3		
4		

M.L. DRAWN BY:
08/10/16 DATE:
16-093 DRAWING No.
SHEET 12 OF 32

©2016 TILTECO, INC.

TILLIT TESTING & ENGINEERING COMPANY
8355 N.W. 36th. St., Ste. 305, VIRGINIA GARDENS, FL 33166
Phone : (305)871-1530 . Fax : (305)871-1531
EB-0006719
WALTER A. TILLIT Jr. P.E.
FLORIDA Lic. # 44167

WALTER A. TILLIT JR. LICENSE No. 44167 STATE OF FLORIDA PROFESSIONAL ENGINEER

DOOR'S HINGE/LOCK/MEETING STILES AND THRESHOLD CONNECTION DETAILS AT 3'-6"x8'-0" OR 7'-0"x8'-0" (MAX.) DOORS (PLAN VIEWS)

SCALE: 6" = 1'

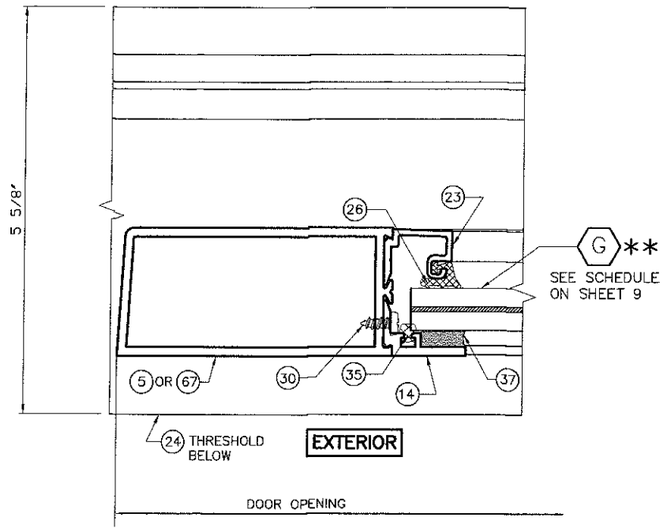

4 JAMB ▲

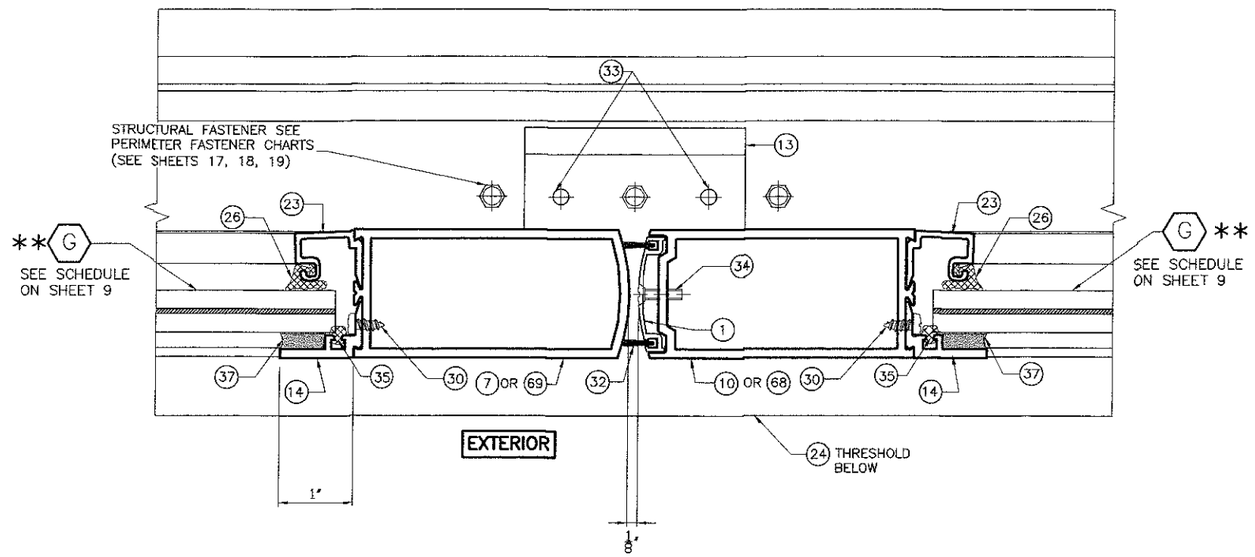

5 MEETING STILES & THRESHOLD CONNECTION ▲

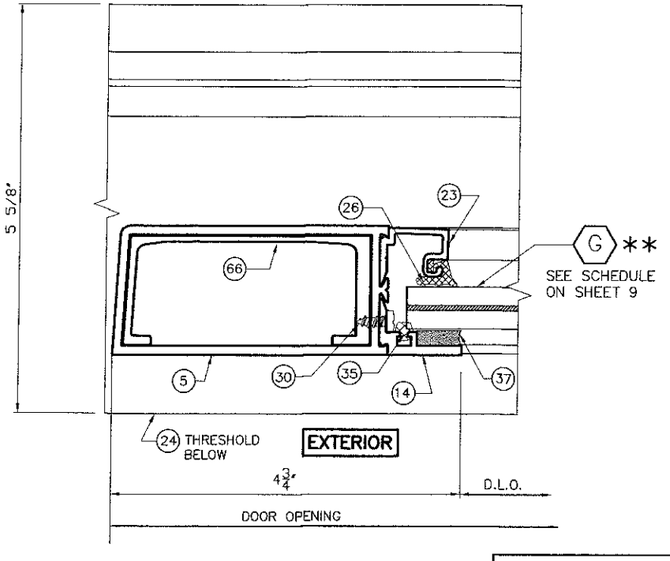

4A* LOCK STILE AT SINGLE DOOR ONLY ▲

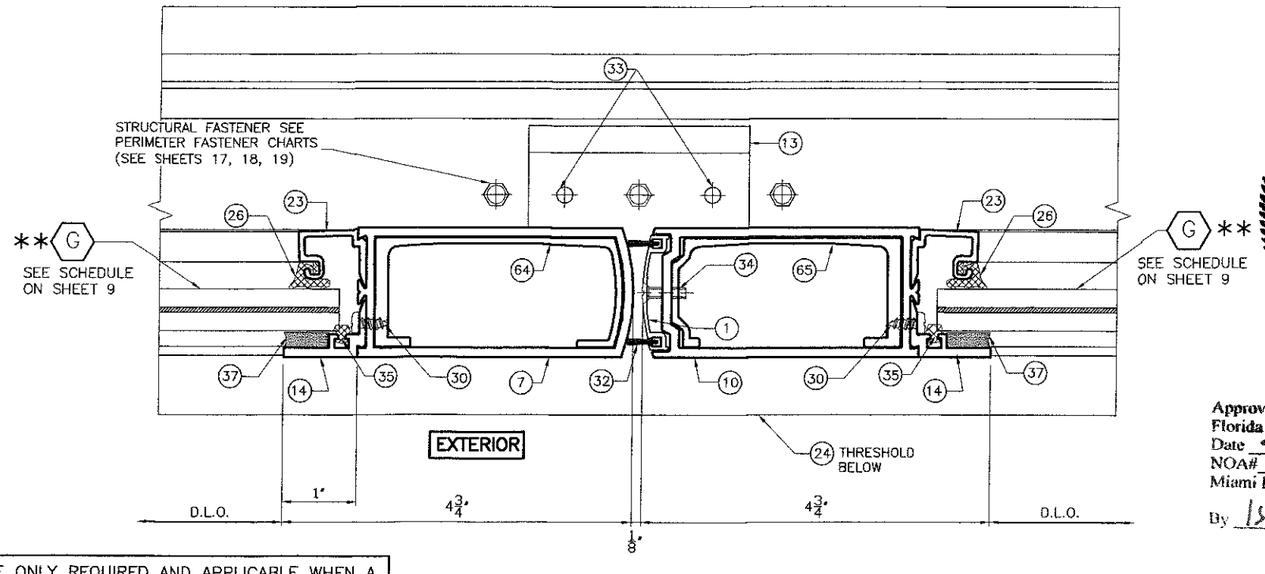

5A* MEETING STILES & THRESHOLD CONNECTION ▲

* DETAILS 4A AND 5A ARE ONLY REQUIRED AND APPLICABLE WHEN A REGENT 5770 CONCEALED PANIC DEVICE IS USED.

** LAMINATED GLASS SHOWN, SEE GLAZING DETAIL FOR (G15) INSULATING GLASS ON SHEET 9.

▲ HARDWARE NOT SHOWN FOR CLARITY. SEE SHEETS 8, 8A & 8B FOR ELEVATIONS & SECTIONS.

FLORIDA BUILDING CODE (HIGH VELOCITY HURRICANE ZONE)

SERIES MSD-375 (MEDIUM) & WSD-500 (WIDE)
STILE ALUMINUM ENTRANCE DOOR (WET GLAZED)
LARGE & SMALL MISSILE IMPACT

DRAWN BY: M.L.
DATE: 08/10/16
DRAWING No. 16-093
SHEET 13 OF 32

REV. NO	DESCRIPTION	DATE
1		
2		
3		
4		

Oldcastle BuildingEnvelope®
803 AIRPORT RD. TERRELL TX 75160
www.OldcastleBE.com-Phone 800-869-4567

©2016 TILTECO, INC.

TILLIT TESTING & ENGINEERING COMPANY
6355 N.W. 36th. St. Suite 305 VIRGINIA GARDENS, FL 33166
Phone : (305)871-1530 , Fax : (305)871-1531
EB-0006719
WALTER A. TILLIT Jr. P.E.
FLORIDA Lic. # 44167

WALTER A. TILLIT JR. LICENSE No. 44167 STATE OF FLORIDA PROFESSIONAL ENGINEER

Approved as complying with the Florida Building Code
Date 5/18/17
NOA# 16-1213.02
Miami Dade Product Control
By

TYPICAL EXTERIOR ELEVATIONS FOR MSD-375 & WSD-500 IMPACT DOOR (WET GLAZED) 3'-6"x8'-0" (SINGLE) & 7'-0"x8'-0" (PAIR) CONNECTED TO EXISTING STRUCTURE OR FG-5000, FG-5100 OR FG-5100T ALUMINUM WINDOW WALL SYSTEM FRAMING

MAX. ASD DESIGN PRESSURE RATING WITH LAMINATED GLASS IS +70, -80 psf.
MAX. ASD DESIGN PRESSURE RATING WITH INSULATED GLASS IS +70, -70 psf.
MAX. ASD DESIGN PRESSURE RATING WITH RIM PANIC HARDWARE IS +60, -60 psf.

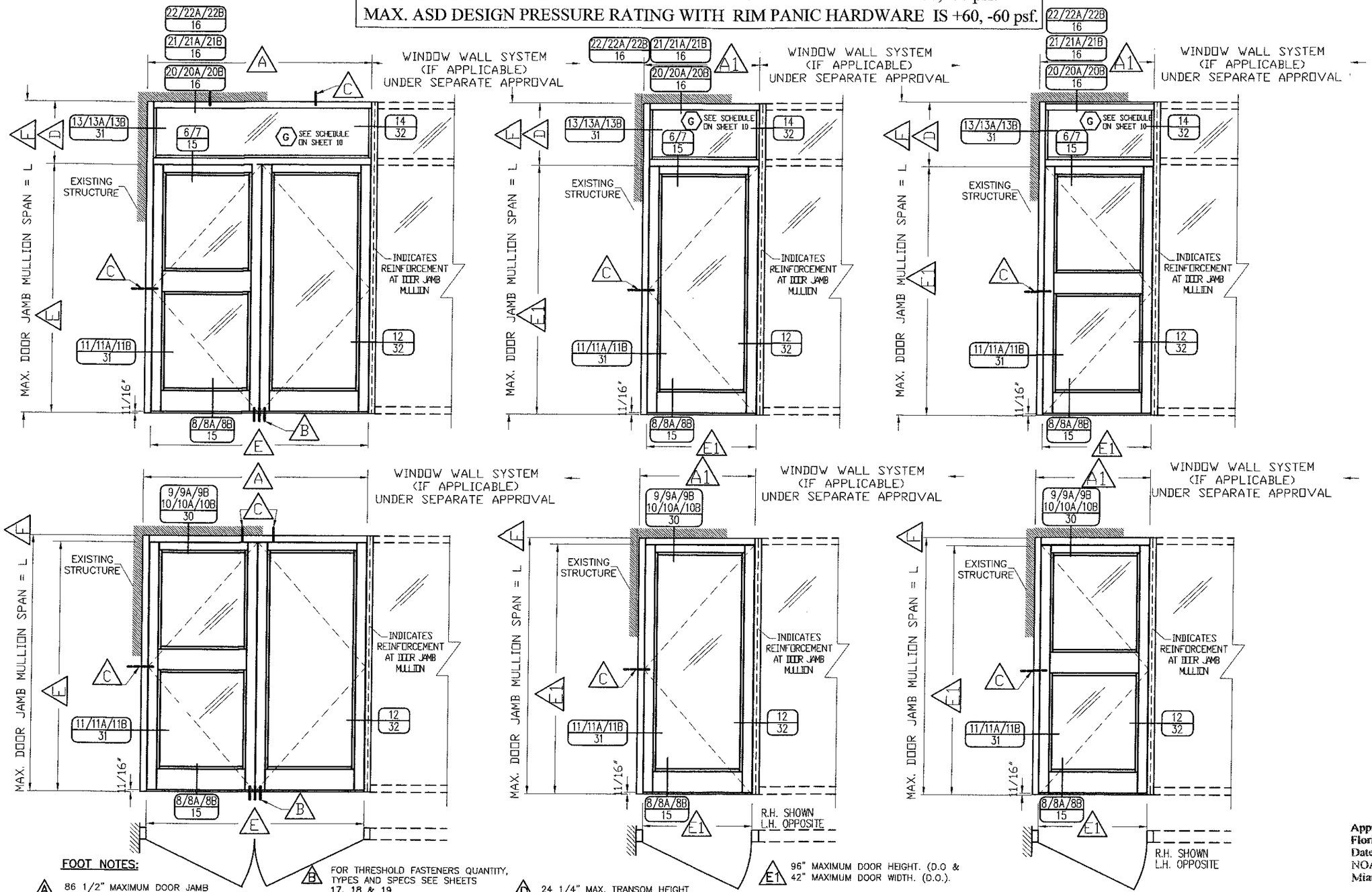

FOOT NOTES:

- A — 86 1/2" MAXIMUM DOOR JAMB MULLION DISTANCE TO END OF DOOR.
- A1 — 44 1/2" MAX. DOOR JAMB MULLION DISTANCE TO END OF DOOR.
- B — FOR THRESHOLD FASTENERS QUANTITY, TYPES AND SPECS SEE SHEETS 17, 18 & 19.
- C — FOR JAMB & HEAD FASTENERS QUANTITY, TYPES AND SPECS SEE SHEETS 17, 18 & 19.
- D — 24 1/4" MAX. TRANSOM HEIGHT
- E — 96" MAXIMUM DOOR HEIGHT (D.O.) & 84" MAXIMUM DOOR WIDTH (D.O.).
- E1 — 96" MAXIMUM DOOR HEIGHT. (D.O & 42" MAXIMUM DOOR WIDTH. (D.O.).
- F — 120 1/4" MAX. DOOR JAMB MULLION SPAN FOR DOOR W/ TRANSOM & 98 1/2" MAX. DOOR JAMB MULLION SPAN FOR DOOR W/O TRANSOM.

FLORIDA BUILDING CODE (HIGH VELOCITY HURRICANE ZONE)

SERIES MSD-375 (MEDIUM) & WSD-500 (WIDE) STILE ALUMINUM ENTRANCE DOOR (WET GLAZED) LARGE & SMALL MISSILE IMPACT

M.L. DRAWN BY:
08/10/16 DATE:
16-093 DRAWING No.
SHEET 14 OF 32

Oldcastle BuildingEnvelope®
803 AIRPORT RD. TERRELL TX 75160
www.OldcastleBE.com-Phone 800-869-4567

REV. NO	DESCRIPTION	DATE	REV. No	DESCRIPTION	DATE
1			3		
2			4		

©2016 TILTECO, INC.

TILTECO INC.
TESTING & ENGINEERING COMPANY
6355 N.W. 36th St. MIAMI SPRINGS, FL 33166
Phone - (305)871-1630 FAX (305)871-1531
EB-0006719
WALTER A. TILLIT Jr. P.E.
FLORIDA Lic. # 44167

WALTER A. TILLIT JR. LICENSE No. 44167 STATE OF FLORIDA PROFESSIONAL ENGINEER

Approved as complying with the Florida Building Code
Date 5/18/17
NOA# 16-12/3.02
Miami Dade Product Control
By

TRANSOM BAR CONNECTION DETAILS TO FG-5000, FG-5100 AND FG-5100T *

* VALID ONLY FOR 3'-6"x7'-0" OR 7'-0"x8'-0" DOORS AT FG-500, FG-5100 & FG-5100T

SCALE: 6" = 1'

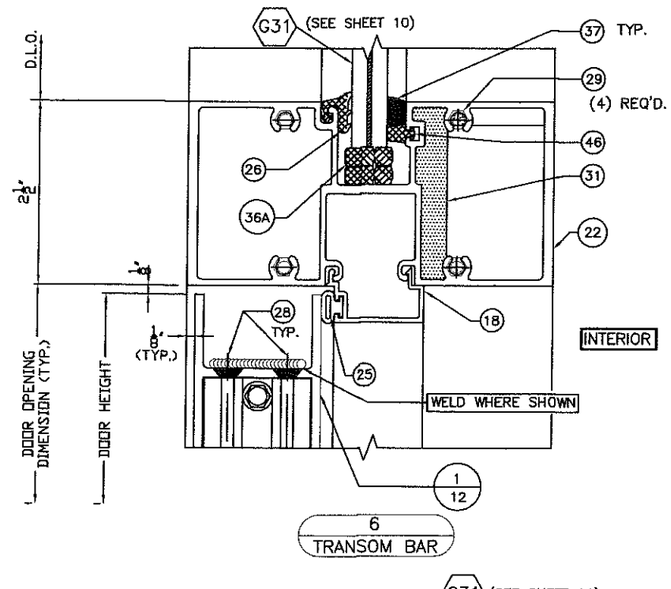

6
TRANSOM BAR

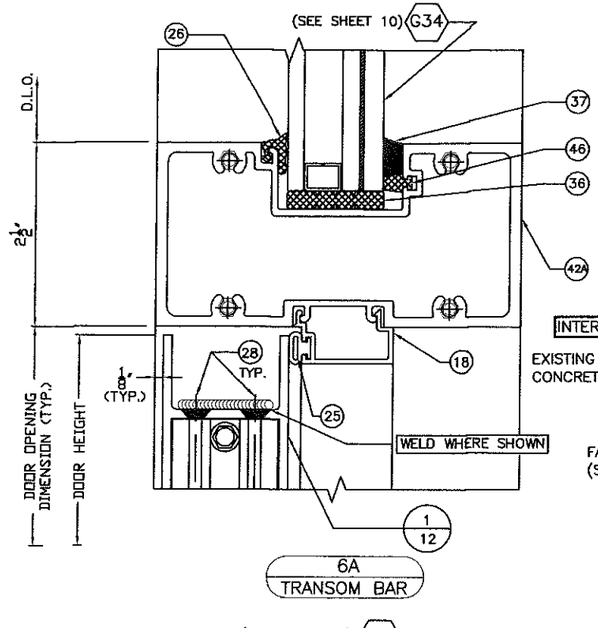

6A
TRANSOM BAR

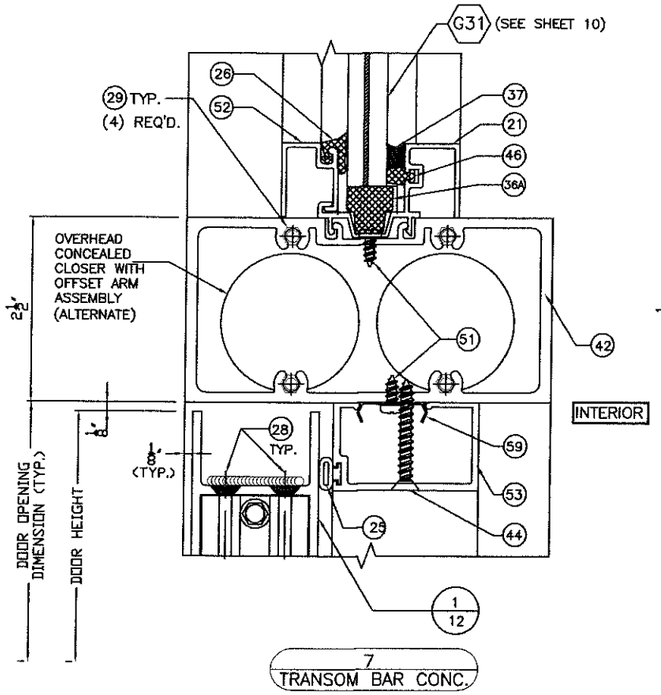

7
TRANSOM BAR CONC.

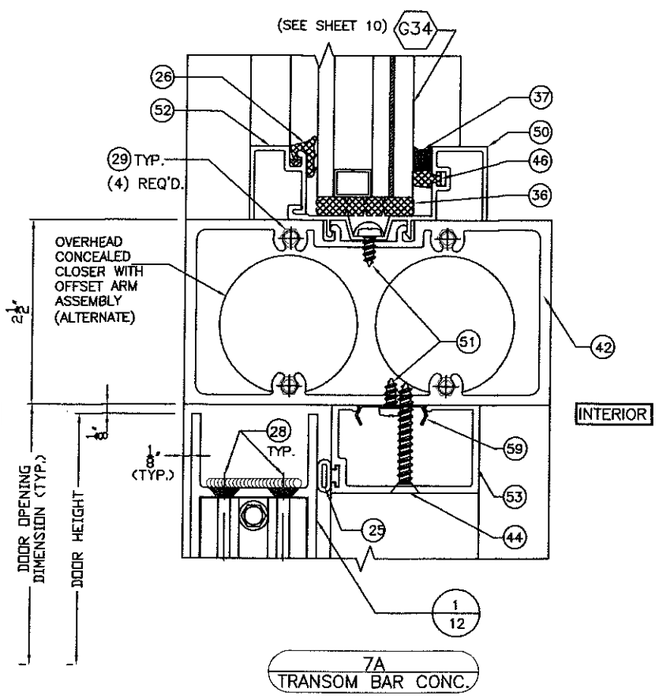

7A
TRANSOM BAR CONC.

THRESHOLD CONNECTION DETAILS TO FG-5000, FG-5100 & FG-5100T

SCALE: 6" = 1'

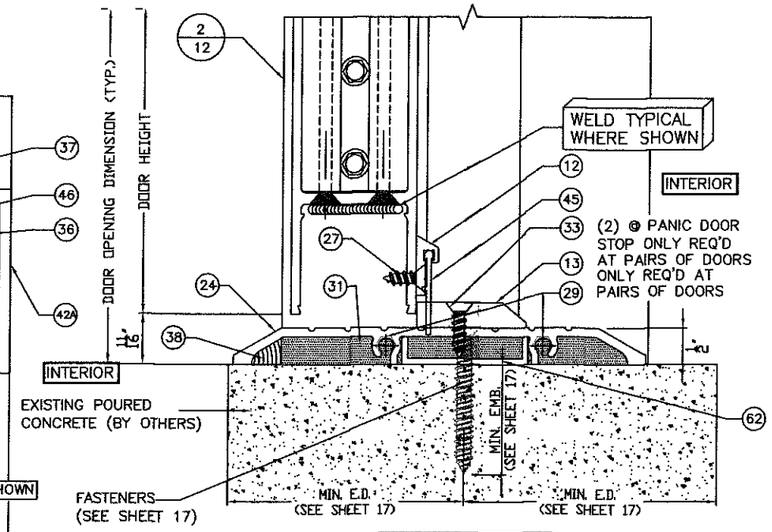

8
THRESHOLD

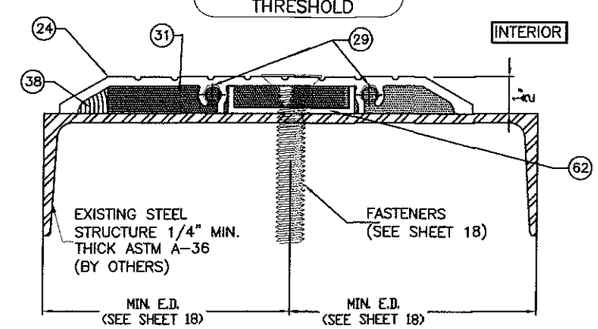

8A
THRESHOLD

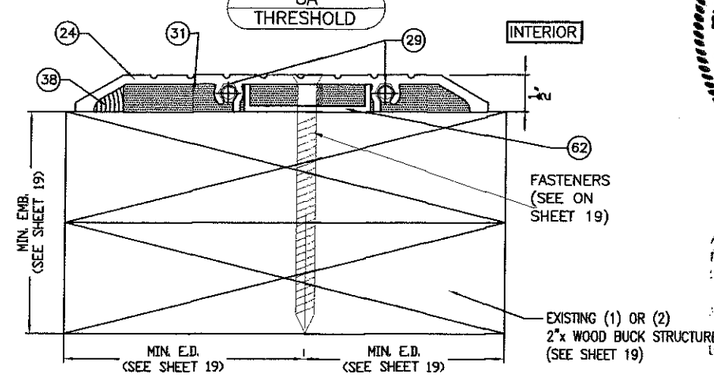

8B
THRESHOLD

FLORIDA BUILDING CODE (HIGH VELOCITY HURRICANE ZONE)

SERIES MSD-375 (MEDIUM) & WSD-500 (WIDE)
STILE ALUMINUM ENTRANCE DOOR (WET GLAZED)
LARGE & SMALL MISSILE IMPACT

Oldcastle BuildingEnvelope™
803 AIRPORT RD. TERRELL TX 75160
www.OldcastleBE.com-Phone 800-869-4567

REV. NO	DESCRIPTION	DATE	REV. No	DESCRIPTION	DATE
1	MDC COMMENTS	4/12/17	3		
2			4		

M.L.
DRAWN BY:
08/10/16
DATE:
16-093
DRAWING No.
SHEET 15 OF 32

©2016 TILTECO, INC.

TILTECO INC.
TILLIT TESTING & ENGINEERING COMPANY
6355 N.W. 36th. St., Ste. 305, VIRGINIA GARDENS, FL 33166
Phone : (305)871-1530 . Fax : (305)871-1531
EB-0006719
WALTER A. TILLIT Jr. P.E.
FLORIDA Lic. # 44167

WALTER A. TILLIT JR. LICENSE NO. 44167 STATE OF FLORIDA PROFESSIONAL ENGINEER

Approved as complying with the Florida Building Code
Date 5/18/17
NOA# 16-1213.02
Miami Dade Product Control
By [signature]

HEADER @ TRANSOM CONNECTION DETAILS AT FG 5000 SYSTEM TO EXISTING STRUCTURE
(VALID ONLY FOR 3'-6"x8'-0" OR 7'-0"x8'-0" DOORS)

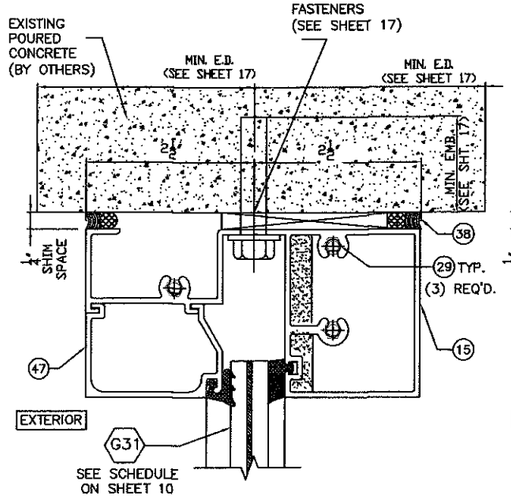

20
HEADER @ TRANSOM
FG-5000

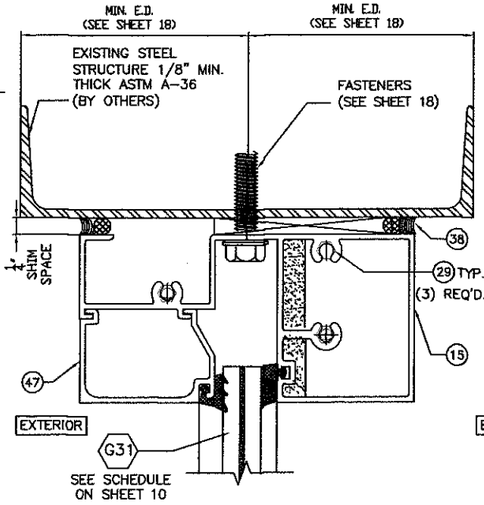

20A
HEADER @ TRANSOM
FG-5000

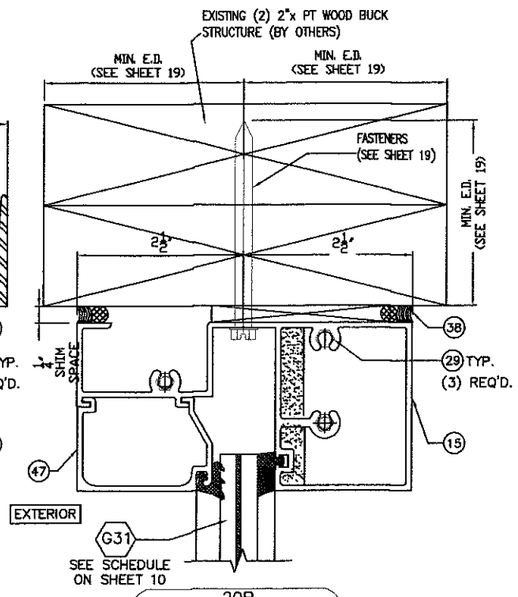

20B
HEADER @ TRANSOM
FG-5000

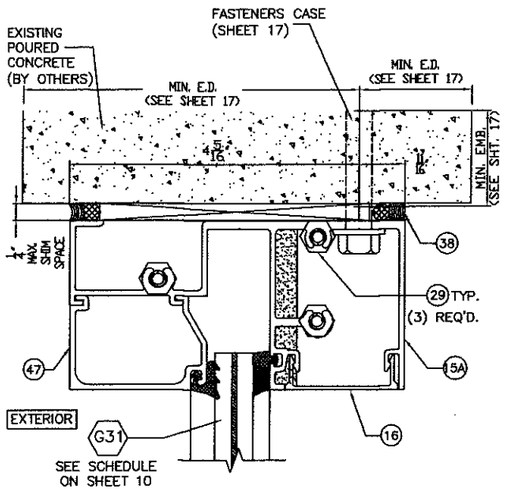

21
HEADER @ TRANSOM
(OPTION TO (5))
FG-5000

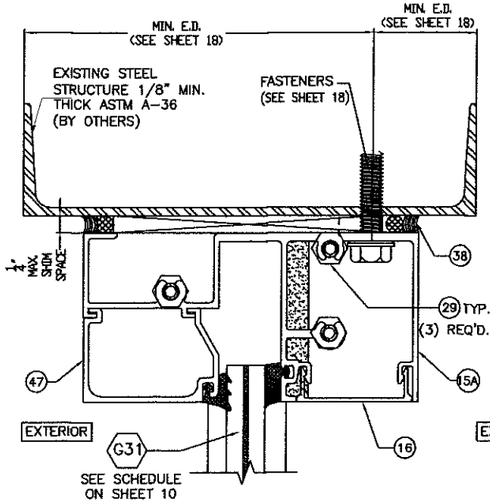

21A
HEADER @ TRANSOM
(OPTION TO (5))
FG-5000

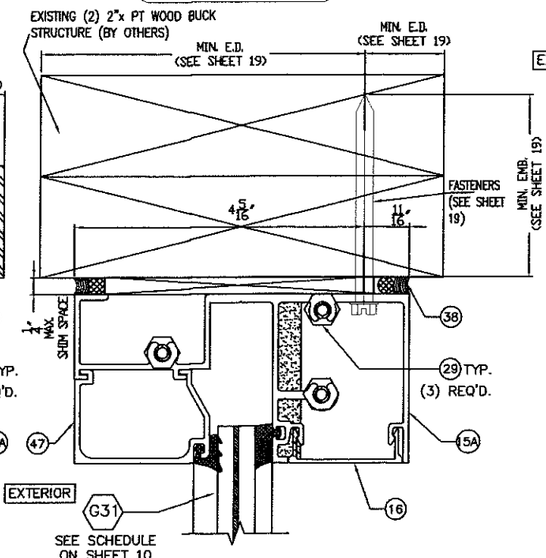

21B
HEADER @ TRANSOM
(OPTION TO (5))
FG-5000

HEADER @ TRANSOM CONN. DETAILS AT FG 5100, FG 5100T SYSTEM TO EXISTING STRUCTURE
(VALID ONLY FOR 3'-6"x8'-0" OR 7'-0"x8'-0" DOORS)

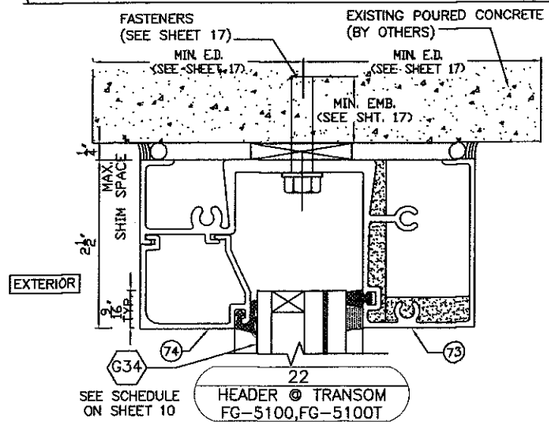

22
HEADER @ TRANSOM
FG-5100,FG-5100T

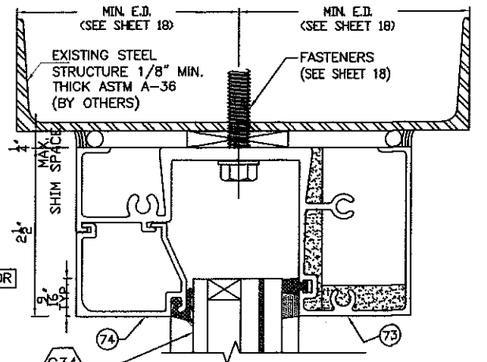

22A
HEADER @ TRANSOM
FG-5100,FG-5100T

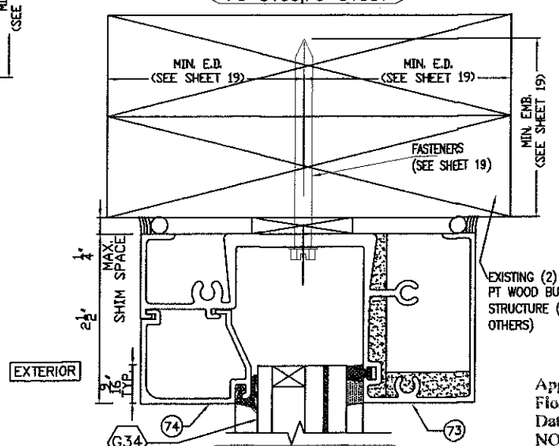

22B
HEADER @ TRANSOM
FG-5100,FG-5100T

FLORIDA BUILDING CODE (HIGH VELOCITY HURRICANE ZONE)

SERIES MSD-375 (MEDIUM) & WSD-500 (WIDE) STILE ALUMINUM ENTRANCE DOOR (WET GLAZED) LARGE & SMALL MISSILE IMPACT

DRAWN BY: M.L
DATE: 08/10/16
DRAWING No. 16-093
SHEET 16 OF 32

Oldcastle BuildingEnvelope®
803 AIRPORT RD. TERRELL TX 75160
www.OldcastleBE.com-Phone 800-869-6567

REV. NO	DESCRIPTION	DATE
1	MDC COMMENTS	4/12/17
2		
3		
4		

©2016 TILTECO, INC.

TILTECO INC.
TILLIT TESTING & ENGINEERING COMPANY
8335 N.W. 36th. St., Ste. 305, VIRGINIA GARDENS, FL 33166
Phone : (305)871-1500 Fax : (305)871-1531
FB-0006719 EB-0006719
WALTER A. TILLIT Jr. P.E.
FLORIDA Lic. # 44167

WALTER A. TILLIT JR. LICENSE NO. 44167 STATE OF FLORIDA PROFESSIONAL ENGINEER

Approved as complying with the Florida Building Code
Date 5/18/17
NOA# 16-1213.02
Miami Dade Product Control
By Sheryl L. Chanda

DOOR & DOOR JAMB MULLION ANCHORAGE TO CONCRETE (MIN f'c=3Ksi) & GROUT FILLED CONCRETE BLOCK (VALID FOR 3'-6"x8'-0" & 7'-0"x8'-0" DOORS)

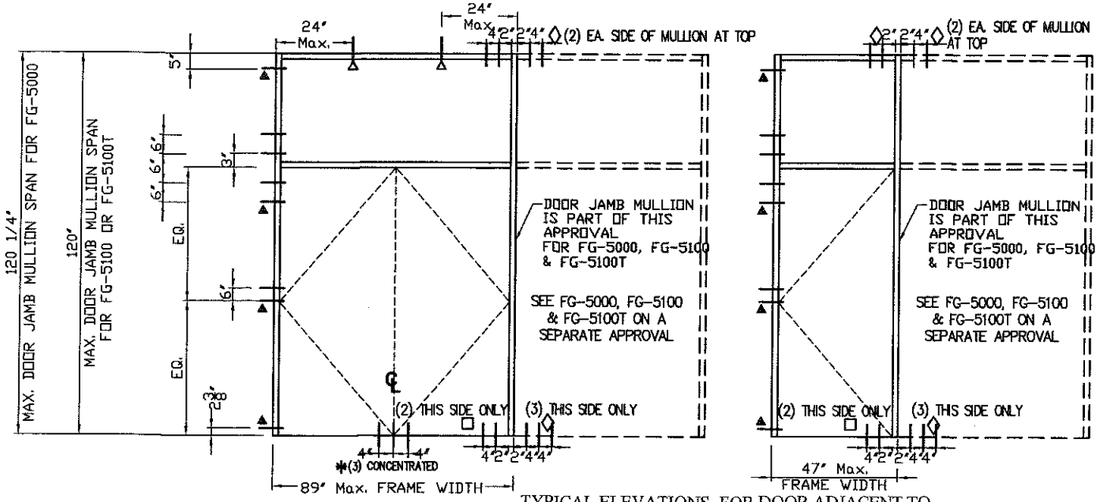

TYPICAL ELEVATIONS FOR DOOR ADJACENT TO FG-5000, FG-5100 & FG-5100T ALUMINUM WINDOW WALL SYSTEM FRAMING

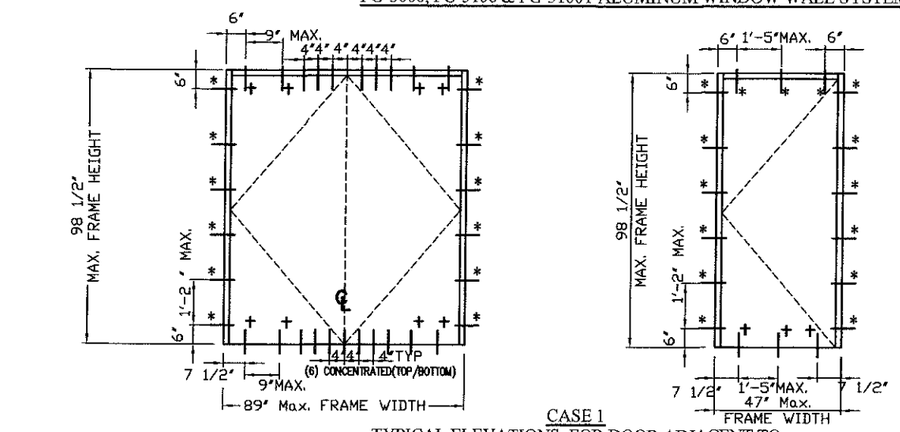

CASE 1
TYPICAL ELEVATIONS FOR DOOR ADJACENT TO EXISTING STRUCTURE W/ ASD DESIGN PRESSURE RATING UP TO +70, -70 psf

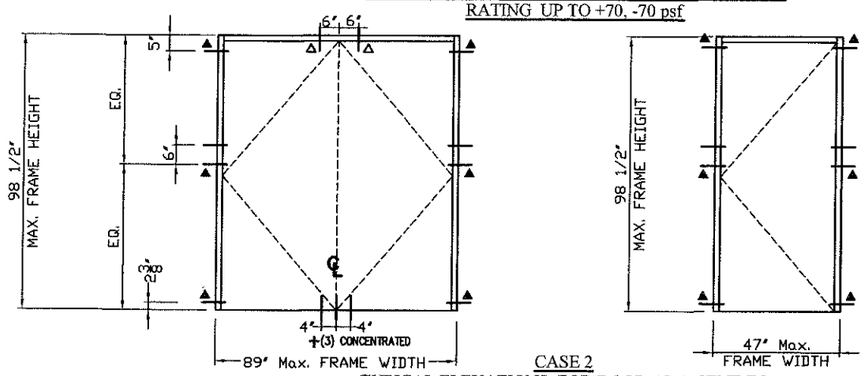

CASE 2
TYPICAL ELEVATIONS FOR DOOR ADJACENT TO EXISTING STRUCTURE W/ ASD DESIGN PRESSURE RATING GREATER THAN +70, -70 psf, UP TO +70, -80 psf

FASTENERS LEGEND

- △ : AT HEADER
- ▲ : AT JAMB
- + : AT HEADER & SILL
- ✱ : AT THRESHOLD, JAMB & HEAD (CASE 1) AT THRESHOLD (CASE 2)
- ◇ : AT MULLION AT TOP OR AT MULLION AT BOTTOM WINDOW WALL SIDE
- □ : AT MULLION THRESHOLD SIDE

FASTENERS TYPES AT △
(VALID FOR CONCRETE)

B – 3/8"Ø POWER FASTENERS TAPPER ANCHOR W/ 1 3/4" Min. EMBEDMENT, W/ 4 1/2" MIN. EDGE DISTANCE, BEYOND ANY FINISH MATERIAL.

C – 3/8"Ø LDT ITW/RED HEAD SCREW ANCHOR W/ 1 1/2" Min. EMBEDMENT, W/ 3" MIN. EDGE DISTANCE, BEYOND ANY FINISH MATERIAL.

D– 3/8"Ø HILTI HUS–H SCREW ANCHOR W/ 2 1/2" MIN. EMB. W/ 5" MIN. ED. INTO POURED CONCRETE

FASTENERS TYPES AT ▲
(VALID FOR GROUTED BLOCK)

B – 3/8"Ø POWER FASTENERS TAPPER ANCHOR W/ 1 3/4" Min. EMBEDMENT, W/ 4 1/2" MIN. EDGE DISTANCE, BEYOND ANY FINISH MATERIAL.

C – 3/8"Ø LDT ITW/RED HEAD SCREW ANCHOR W/ 1 1/2" Min. EMBEDMENT, W/ 3" MIN. EDGE DISTANCE, BEYOND ANY FINISH MATERIAL.

D– 3/8"Ø HILTI HUS–H SCREW ANCHOR W/ 2 1/2" MIN. EMB. W/ 2 3/4" MIN. ED. INTO GROUT FILLED CONCRETE BLOCK.

FASTENERS TYPE AT +
(VALID FOR CONCRETE)

F – 1/4"Ø F.H. ELCO ULTRACON ANCHOR W/ 1 3/4" Min. EMBEDMENT, W/ 2 1/2" MIN. EDGE DISTANCE, BEYOND ANY FINISH MATERIAL.

FASTENERS TYPE AT ✱
(VALID FOR GROUTED BLOCK)

F – 1/4"Ø F.H. ELCO ULTRACON ANCHOR W/ 1 3/4" Min. EMBEDMENT, W/ 2 1/2" MIN. EDGE DISTANCE, BEYOND ANY FINISH MATERIAL.

FASTENERS TYPE AT ◇
(VALID FOR CONCRETE)

A – 3/8"Ø F.H. POWERS FASTENERS TAPPER SCREW ANCHOR W/ 1 3/4" MIN. EMBEDMENT INTO POURED CONCRETE (MIN. F'C = 3 KSI), W/ 4 1/2" MIN. EDGE DISTANCE, BEYOND ANY FINISH MATERIAL.

C' – 3/8"Ø LDT ITW/RED HEAD SCREW ANCHOR W/ 2" Min. EMBEDMENT, W/ 3" MIN. EDGE DISTANCE, BEYOND ANY FINISH MATERIAL..

FASTENERS TYPE AT □
(VALID FOR CONCRETE)

I – 3/8"Ø F.H. POWERS FASTENERS TAPPER SCREW ANCHOR W/ 1 3/4" MIN. EMBEDMENT INTO POURED CONCRETE (MIN. F'C = 3 KSI), W/ 4 1/2" MIN. EDGE DISTANCE, BEYOND ANY FINISH MATERIAL.

FLORIDA BUILDING CODE (HIGH VELOCITY HURRICANE ZONE)

SERIES MSD-375 (MEDIUM) & WSD-500 (WIDE)
STILE ALUMINUM ENTRANCE DOOR (WET GLAZED)
LARGE & SMALL MISSILE IMPACT

M.L. DRAWN BY:
08/10/16 DATE:
16-093 DRAWING No.
SHEET 17 OF 32

Oldcastle BuildingEnvelope®
803 AIRPORT RD. TERRELL TX 75160
www.OldcastleBE.com-Phone 800-869-4567

REV. NO	DESCRIPTION	DATE
1		
2		
3		
4		

©2016 TILTECO, INC.

TILTECO INC.
TILLIT TESTING & ENGINEERING COMPANY
8355 N.W. 36th St. Ste. 300 MIRAMAR (MIAMI), FL. 33166
Phone : (305)871-1530, Fax : (305)871-1531
EB-0006719
WALTER A. TILLIT Jr. P.E.
FLORIDA Lic. # 44167

WALTER A. TILLIT JR. LICENSE No. 44167 STATE OF FLORIDA PROFESSIONAL ENGINEER

Approved as complying with the Florida Building Code
Date 5/18/17
Notice 16-1213.02
Miami-Dade Product Control
By Ishaq I. Chaudhry

DOOR & DOOR JAMB MULLION ANCHORAGE TO MIN 1/8" THICK ASTM A-36 STEEL OR 10 GAGE (0.135") ASTM-653, GRADE 33 STEEL (VALID FOR 3'-6"x8'-0" & 7'-0"x8'-0" DOORS)

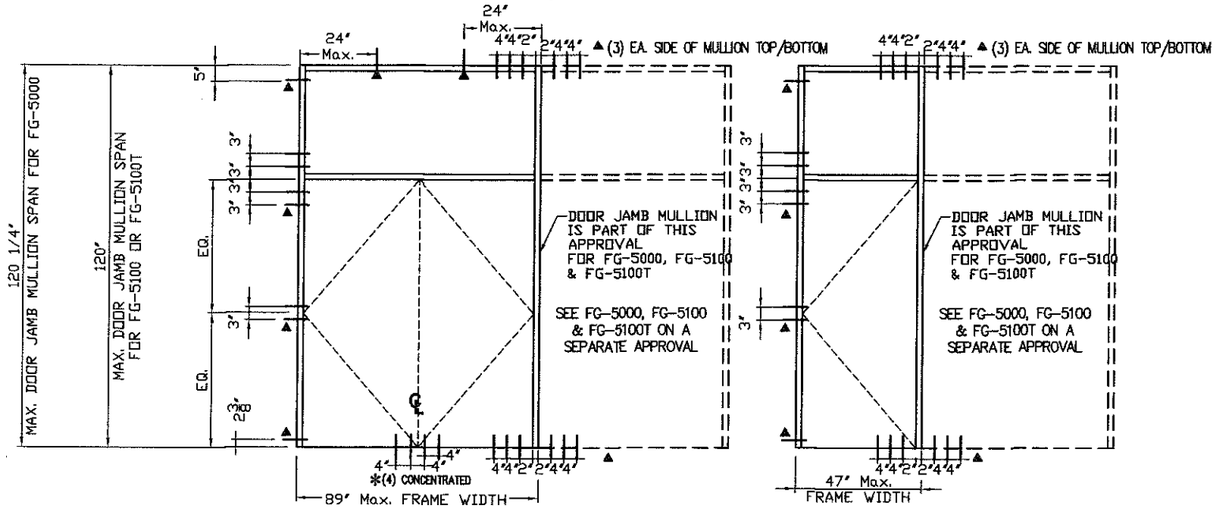

TYPICAL ELEVATIONS FOR DOOR ADJACENT TO FG-5000 & FG-5100 ALUMINUM WINDOW WALL SYSTEM FRAMING

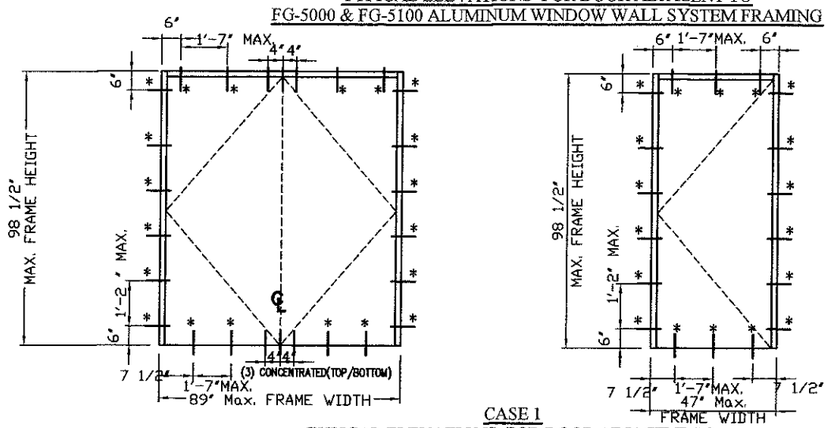

CASE 1

TYPICAL ELEVATIONS FOR DOOR ADJACENT TO EXISTING STRUCTURE W/ ASD DESIGN PRESSURE RATING UP TO +70, -70 psf

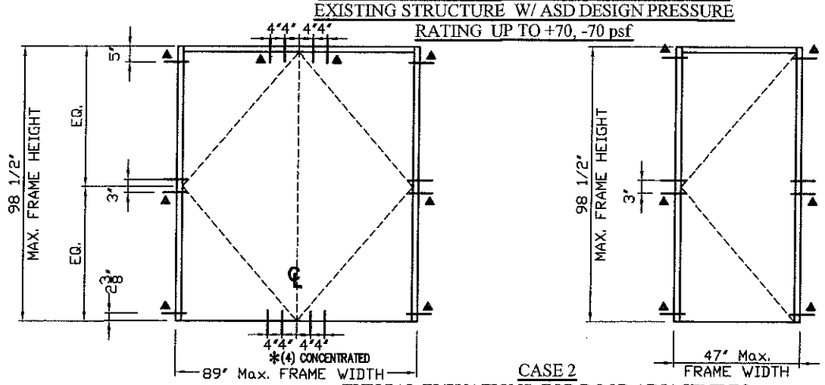

CASE 2

TYPICAL ELEVATIONS FOR DOOR ADJACENT TO EXISTING STRUCTURE W/ ASD DESIGN PRESSURE RATING GREATER THAN +70, -70 psf, UP TO +70, -80 psf

FASTENERS LEGEND

▲ : AT JAMB & HEADER

* : AT THRESHOLD, JAMB & HEAD (CASE 1)
AT THRESHOLD (CASE 2)

FASTENERS TYPES AT ▲

D - 3/8"Ø H.H. TYPE "F" BOLT W/ 3/4" MIN. EDGE DISTANCE, BEYOND ANY FINISH MATERIAL. BOLT TO BE MIN. FULLY ENGAGED INTO PROFILE THICKNESS

FASTENERS TYPE AT *

G - 1/4"Ø-20 ELCO DRILL FLEX SELF DRILLING SCREWS W/ 1/2" MIN. EDGE DISTANCE, BEYOND ANY FINISH MATERIAL. FULLY ENGAGED INTO PROFILE THICKNESS

FLORIDA BUILDING CODE (HIGH VELOCITY HURRICANE ZONE)

SERIES MSD-375 (MEDIUM) & WSD-500 (WIDE)
STILE ALUMINUM ENTRANCE DOOR (WET GLAZED)
LARGE & SMALL MISSILE IMPACT

DRAWN BY: M.L.
DATE: 08/10/16
DRAWING No. 16-093
SHEET 18 OF 32

Oldcastle BuildingEnvelope®
803 AIRPORT RD. TERRELL TX 75160
www.OldcastleBE.com-Phone 800-869-4567

REV. NO	DESCRIPTION	DATE
1	MDC COMMENTS	4/12/17
2		
3		
4		

©2016 TILTECO, INC.

TILLIT TESTING & ENGINEERING COMPANY
6355 N.W. 36th. St., Ste. 305, VIRGINIA GARDENS, FL 33166
Phone : (305)871-1530 , Fax : (305)871-1531
EB-0006719
WALTER A. TILLIT Jr, P.E.
FLORIDA Lic. # 44167

WALTER A. TILLIT JR. LICENSE No. 44167 STATE OF FLORIDA PROFESSIONAL ENGINEER

Approved as complying with the Florida Building Code
Date 5/18/17
NOA# 16-1213.02
Miami Dade Product Control
By Ishaq Ibrahim

DOOR & DOOR JAMB MULLION ANCHORAGE TO WOOD (VALID FOR 3'-6"x8'-0" & 7'-0"x8'-0" DOORS)

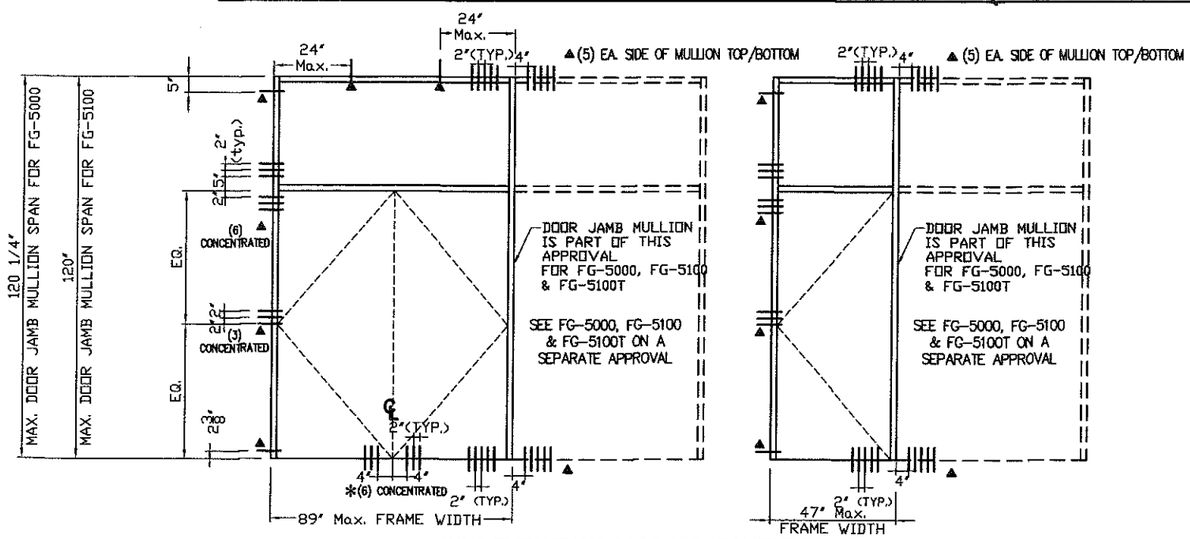

TYPICAL ELEVATIONS FOR DOOR ADJACENT TO
FG-5000 & FG-5100 ALUMINUM WINDOW WALL SYSTEM FRAMING

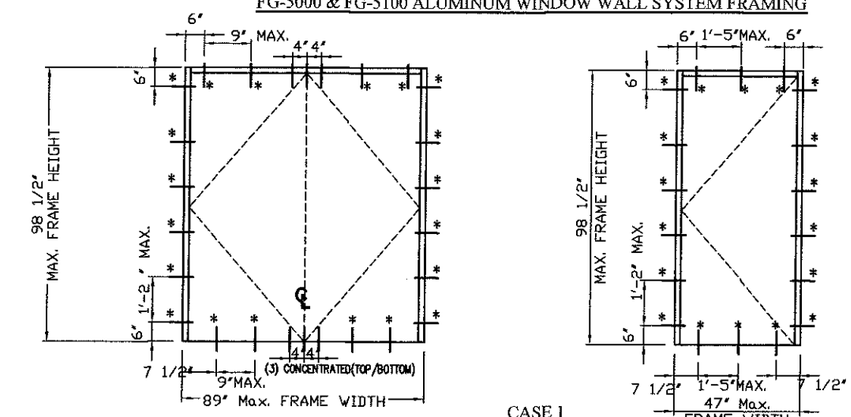

CASE 1
TYPICAL ELEVATIONS FOR DOOR ADJACENT TO
EXISTING STRUCTURE W/ ASD DESIGN PRESSURE
RATING UP TO +70, -70 psf

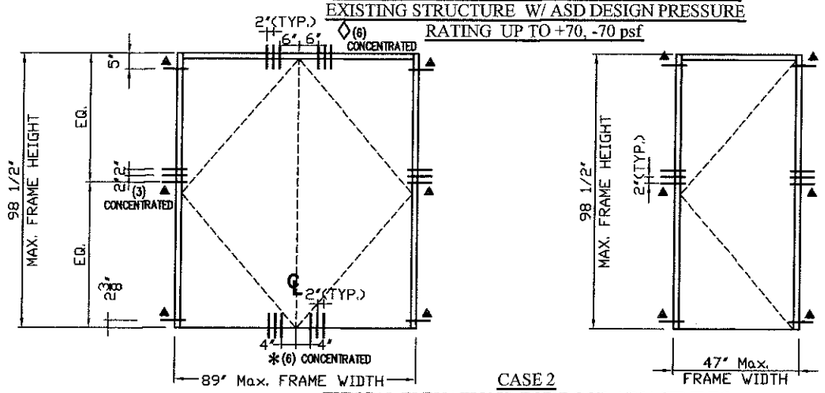

CASE 2
TYPICAL ELEVATIONS FOR DOOR ADJACENT TO
EXISTING STRUCTURE W/ ASD DESIGN PRESSURE
RATING GREATER THAN +70, -70 psf, UP TO +70, -80 psf

FASTENERS LEGEND

▲ : AT JAMB, HEADER AND AT DOOR JAMB MULLION (TOP/BOTTOM)

* : AT THRESHOLD, JAMB & HEAD (CASE 1), INTO SINGLE 2x BUCK
AT THRESHOLD (CASE 2), INTO DOUBLE 2x BUCK

FASTENERS TYPE AT ▲

E - 3/8"Ø LAG SCREWS TO DOUBLE 2x BUCK (G=0.55) W/ 3" Min. PENETRATION INTO WOOD W/ 1 1/2" MIN. EDGE DISTANCE, BEYOND ANY FINISH MATERIAL

FASTENERS TYPE AT *

H- 1/4"Ø ELCO ULTRACONS W/ 1 1/2" Min. PENETRATION INTO SINGLE 2x BUCK W/ 3" Min. PENETRATION INTO DOUBLE 2x BUCK W/ 1" MIN. EDGE DISTANCE, BEYOND ANY FINISH MATERIAL.

FLORIDA BUILDING CODE (HIGH VELOCITY HURRICANE ZONE)

SERIES MSD-375 (MEDIUM) & WSD-500 (WIDE)
STILE ALUMINUM ENTRANCE DOOR (WET GLAZED)
LARGE & SMALL MISSILE IMPACT

M.L.
DRAWN BY:
08/10/16
DATE:
16-093
DRAWING No.
SHEET 19 OF 32

Oldcastle BuildingEnvelope
803 AIRPORT RD. TERRELL TX 75160
www.OldcastleBE.com-Phone 800-869-4567

REV. NO	DESCRIPTION	DATE	REV. No	DESCRIPTION	DATE
1			3		
2			4		

©2016 TILTECO, INC.

TILTECO INC.
TILLIT TESTING & ENGINEERING COMPANY
6355 N.W. 36th. St., Ste. 305, VIRGINIA GARDENS, Fl. 33166
Phone : (305)871-1530 , Fax : (305)871-1531
EB-0006719
WALTER A. TILLIT Jr. P.E.
FLORIDA Lic. # 44167

WALTER A. TILLIT JR. LICENSE No. 44167 STATE OF FLORIDA PROFESSIONAL ENGINEER

Approved as complying with the
Florida Building Code
Date 5/18/17
NOA# 16-1213.02
Miami Dade Product Control
By [signature]

HARDWARE SCHEDULE 4'-0" X 8'-0" (Max.) SINGLE MSD-375 & WSD-500 DOORS

HARDWARE TYPE	HARDWARE MODEL AND DESCRIPTION	MANUFACTURER	MAX. DESIGN PRESSURE	MAX. DOOR SIZE	NOTES
3-POINT LOCK	MS 1850 DEADLOCK AT 39" A.F.F. + 4015 THRESHOLD BOLT + 4016 HEADER BOLT	ADAMS RITE	+70 / -70 PSF	4'-0" X 8'-0"	REQUIRES 1 3/8" THROW AT THRESHOLD/HEADER BOLTS, INCLUDES SERIES MS 4000, 4001 & 4002 DEAD LOCK STRIKES
SURFACE CLOSER	MODEL VARIES BY MANUFACTURER	VARIES	N/A	N/A	
CONCEALED CLOSER	21-211 HVY DUTY W/OFFSET SWING ARM	JACKSON	N/A	N/A	
BUTT HINGES 4" X 4 1/2"	BB1199 BALL BEARING STAINLESS STEEL	HAGER	+70 / -70 PSF	4'-0" X 8'-0"	(4) PER DOOR LEAF
PULL HANDLES	PH-20 FORMED ALUMINUM	OBE	N/A	N/A	
PUSH BARS	PB-21 FORMED ALUMINUM	OBE	N/A	N/A	
CYLINDER	CY-1 LOCK CYLINDER	OBE	N/A	N/A	
KEY CONTROL	106 KEY CONTROL FOR SARGENT	SARGENT	N/A	N/A	
THUMB TURN	CY-3	OBE	N/A	N/A	
CYLINDER	CY-5 FOR VON DUPRIN DEVICES	OBE	N/A	N/A	
LOCK INDICATOR	AR-4089 OPTIONAL DEVICE	ADAMS RITE	N/A	N/A	
PANIC STOP	D-134-2 LOCATED AT THRESHOLD	OBE	N/A	N/A	
THRESHOLD	TH-57 COMPONENT (24)	OBE	+70 / -70 PSF	4'-0" X 8'-0"	
DOOR BOTTOM SWEEP	D-118 / D120	OBE	N/A	N/A	
CONT. GEAR HINGE	KCFM-95HD1 CONTINUOUS GEAR HINGES	PEMKO	+70 / -70 PSF	4'-0" X 8'-0"	

FLORIDA BUILDING CODE (HIGH VELOCITY HURRICANE ZONE)

SERIES MSD-375 (MEDIUM) & WSD-500 (WIDE)
STILE ALUMINUM ENTRANCE DOOR (WET GLAZED)
LARGE & SMALL MISSILE IMPACT

M.L. DRAWN BY:
08/10/16 DATE:
16-093 DRAWING No.
SHEET 20 OF 32

Oldcastle BuildingEnvelope®
803 AIRPORT RD. TERRELL TX 75160
www.OldcastleBE.com-Phone 800-869-4567

REV. NO	DESCRIPTION	DATE
1	MDC COMMENTS	4/12/17
2		

REV. No	DESCRIPTION	DATE
3		
4		

©2016 TILTECO, INC.

TILLIT TESTING & ENGINEERING COMPANY
6355 N.W. 36th. St. Ste. 305 VIRGINIA GARDENS, FL 33166
Phone : (305)871-1530 . Fax : (305)871-1531
EB-0006719
WALTER A. TILLIT Jr. P.E.
FLORIDA Lic. # 44167

WALTER A. TILLIT JR. LICENSE No. 44167 STATE OF FLORIDA PROFESSIONAL ENGINEER

Approved as complying with the
Florida Building Code
Date 5/18/17
NOA# 16-1213.02
Miami Dade Product Control
By Ishaq I. Chanda

HARDWARE SCHEDULE 8'-0" X 8'-0" (Max.) PAIRS MSD-375 & WSD-500 DOORS

HARDWARE TYPE	HARDWARE MODEL AND DESCRIPTION	MANUFACTURER	MAX. DESIGN PRESSURE	MAX. DOOR SIZE	NOTES
3-POINT LOCK	MS 1850 DEADLOCK AT 39" A.F.F. + 4015 THRESHOLD BOLT + 4016 HEADER BOLT	ADAMS RITE	+70 / -70 PSF	8'-0" X 8'-0"	ACTIVE DOOR. REQUIRES 1 3/8" THROW AT THRESHOLD/HEADER BOLTS, INCLUDES SERIES MS 4000, 4001 & 4002 DEAD LOCK STRIKES
2-POINT LOCK	MS 2180 AUTO RELEASE FLUSH BOLT	ADAMS RITE	+70 / -70 PSF	8'-0" X 8'-0"	INACTIVE DOOR REQUIRES 0.72" TOP & BOTTOM, AND STRIKE TOP & BOTTOM WITH 1/2"ø HOLE
CONCEALED PANIC	8410 CONCEALED VERTICAL ROD PANIC W/ 640 STRIKE (TOP & BOTTOM)	SARGENT	+70 / -70 PSF	8'-0" X 8'-0"	
SURFACE CLOSER	MODEL VARIES BY MANUFACTURER	VARIES	N/A	N/A	
CONCEALED CLOSER	21-211 HVY DUTY W/OFFSET SWING ARM	JACKSON	N/A	N/A	
BUTT HINGES 4" X 4 1/2"	BB1199 BALL BEARING STAINLESS STEEL	HAGER	+70 / -70 PSF	8' X 8'	(4) PER DOOR LEAF
PULL HANDLES	PH-20 FORMED ALUMINUM	OBE	N/A	N/A	
PUSH BARS	PB-21 FORMED ALUMINUM	OBE	N/A	N/A	
CYLINDER	CY-1 LOCK CYLINDER	OBE	N/A	N/A	
KEY CONTROL	106 KEY CONTROL FOR SARGENT	SARGENT	N/A	N/A	
THUMB TURN	CY-3	OBE	N/A	N/A	
CYLINDER	CY-5 FOR VON DUPRIN DEVICES	OBE	N/A	N/A	
LOCK INDICATOR	AR-4089 OPTIONAL DEVICE	ADAMS RITE	N/A	N/A	
PANIC STOP	D-134-2 LOCATED AT THRESHOLD	OBE	N/A	N/A	
THRESHOLD	TH-57 COMPONENT 24	OBE	+70 / -70 PSF	8'-0" X 8'-0"	
DOOR BOTTOM SWEEP	D-118 / D120	OBE	N/A	N/A	
CONT. GEAR HINGE	KCFM-95HD1 CONTINUOUS GEAR HINGES	PEMKO	+70 / -70 PSF	8'-0" X 8'-0"	

FLORIDA BUILDING CODE (HIGH VELOCITY HURRICANE ZONE)

SERIES MSD-375 (MEDIUM) & WSD-500 (WIDE)
STILE ALUMINUM ENTRANCE DOOR (WET GLAZED)
LARGE & SMALL MISSILE IMPACT

M.L.
DRAWN BY:

08/10/16
DATE:

16-093
DRAWING No.

SHEET 21 OF 32

Oldcastle BuildingEnvelope™
803 AIRPORT RD. TERRELL TX 75160
www.OldcastleBE.com-Phone 800-869-4567

REV. NO	DESCRIPTION	DATE	REV. No	DESCRIPTION	DATE
1	MDC COMMENTS	4/12/17	3		
2			4		

©2016 TILTECO, INC.

TILTECO INC.
TILLIT TESTING & ENGINEERING COMPANY
6355 N.W. 36th. St., Ste. 305, VIRGINIA GARDENS, FL 33166
Phone : (305)871-1530 . Fax : (305)871-1531
EB-0006719
WALTER A. TILLIT Jr. P.E.
FLORIDA Lic. # 44167

WALTER A. TILLIT JR.
LICENSE
NO. 44167
STATE OF FLORIDA
PROFESSIONAL ENGINEER
SEAL/SIGNATURE/DATE

Approved as complying with the
Florida Building Code
Date 5/18/17
NOA# 16-1212.02
Miami Dade Product Control
By Ishwaj I. Chand

TYPICAL GLAZING DETAILS AT 4'-0" X 8'-0" OR 8'-0" X 8'-0" (Max.) DOORS

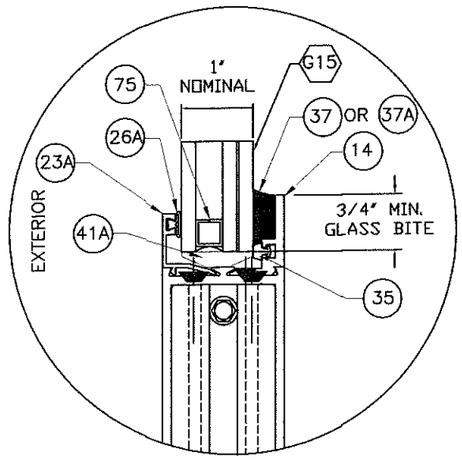

GLASS TYPE G15

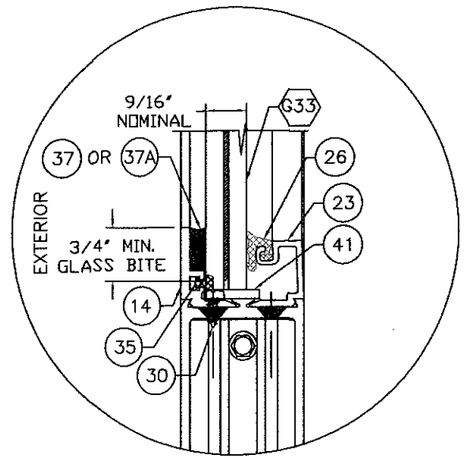

GLASS TYPE G33

GLASS SCHEDULE FOR 4'-0"x8'-0" OR 8'-0"x8'-0" DOORS				
GLASS LABEL	GLASS COMPOSITION	INTERLAYER MANUFACTURER NAME	MAXIMUM D.L.O.	MAX. ASD DESIGN PRESSURE RATING FOR GLASS (P.S.F) W/ 37 OR 37A SILICONE
G33	9/16" NOMINAL THICKNESS LAMINATED GLASS CONSISTING OF TWO 1/4" H.S. GLASS, AND A 0.075" SAFLEX C.P. W/PET CORE GLASS INTERLAYER	EASTMAN CHEMICAL COMPANY	38 3/4" W x 82 9/16" H	+70, -70
G15	1" NOMINAL THICKNESS INSULATED GLASS CONSISTING OF 3/16" TEMPERED GLASS OB , 5/16" SPACER & 3/16" H.S. GLASS OVER 0.075" SAFLEX C.P. W/ PET CORE GLASS INTERLAYER OVER 3/16" H.S. GLASS	EASTMAN CHEMICAL COMPANY		+70, -70

TYPICAL DOOR GLASS SIZE= DLO +1 1/2"

FLORIDA BUILDING CODE (HIGH VELOCITY HURRICANE ZONE)

SERIES MSD-375 (MEDIUM) & WSD-500 (WIDE)
STILE ALUMINUM ENTRANCE DOOR (WET GLAZED)
LARGE & SMALL MISSILE IMPACT

Oldcastle BuildingEnvelope
803 AIRPORT RD. TERRELL TX 75160
www.OldcastleBE.com-Phone 800-869-4567

REV. NO	DESCRIPTION	DATE	REV. No	DESCRIPTION	DATE
1	MDC COMMENTS	4/12/17	3		
2			4		

M.L.
DRAWN BY:
08/10/16
DATE:
16-093
DRAWING No.
SHEET 22 OF 32

©2016 TILTECO, INC.

TILTECO INC.
TILLIT TESTING & ENGINEERING COMPANY
3355 N.W. 36th. St., Ste. 305, VIRGINIA GARDENS, Fl. 33166
Phone : (305)871-1530 , Fax : (305)871-1531
EB-0006719
WALTER A. TILLIT Jr. P.E.
FLORIDA Lic. # 44167

WALTER A. TILLIT JR. LICENSE No. 44167 STATE OF FLORIDA PROFESSIONAL ENGINEER
P.E. SEAL/SIGNATURE DATE

Approved as complying with the Florida Building Code
Date 5/18/17
NOA# 16-1213.02
Miami Dade Product Control
By Ishaq J. Chanda

TYPICAL PANEL ELEVATIONS FOR MSD-375 & WSD-500 IMPACT 4'-0"x8'-0" OR 8'-0"x8'-0" SINGLE/PAIR OF DOORS (WET GLAZED)

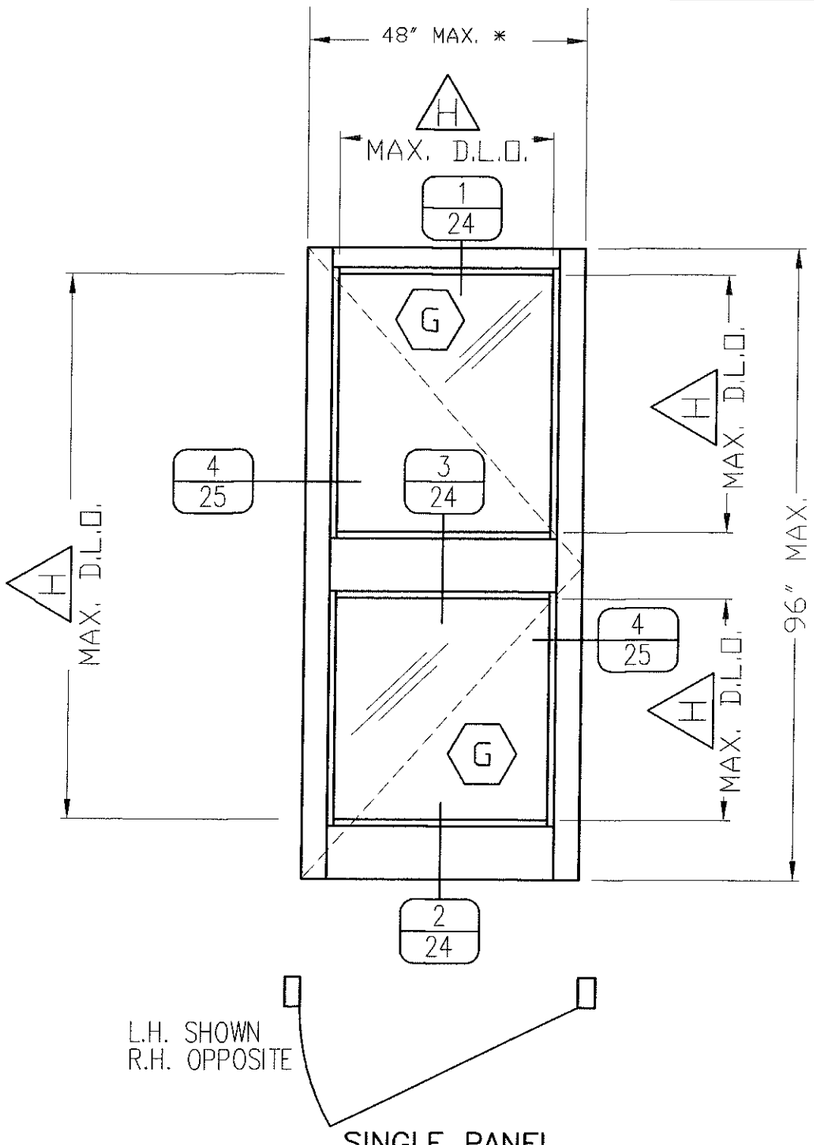

SINGLE PANEL
EXTERIOR ELEVATION

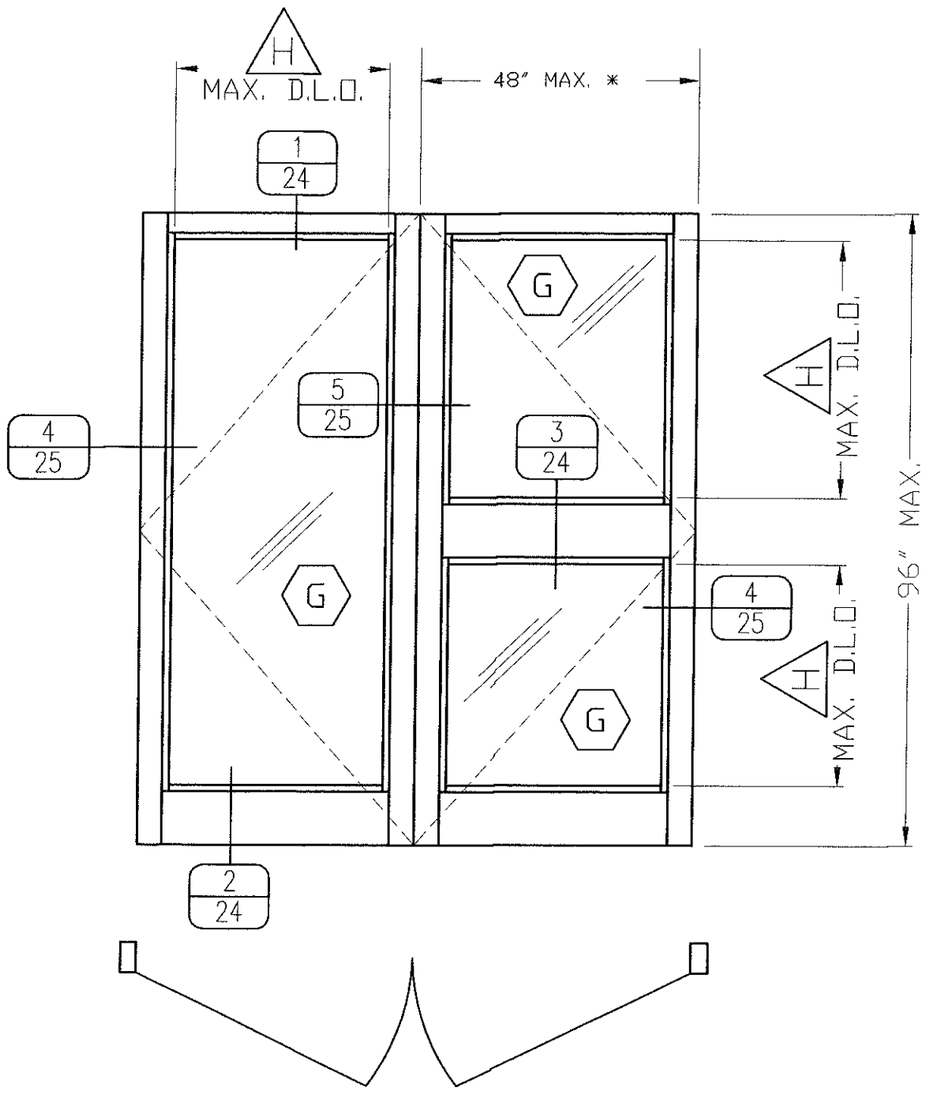

DOUBLE PANEL
EXTERIOR ELEVATION

FOOT NOTES:

- (G) FOR GLAZING DETAILS AND GLASS SCHEDULE SEE SHEET 22.
- (H) FOR MAXIMUM DAYLIGHT OPENING (D.L.O.) SEE SCHEDULE ON SHEET 22.
- * SEE SCHEDULE ON SHEET 1 FOR LIMITATIONS ON MAX. A.S.D PRESSURE RATINGS, USABLE GLASS & HARDWARE.

FRAME WIDTH = PANEL WIDTH(S) + 5"
FRAME HEIGHT = PANEL HEIGHT + 2 1/2"

FLORIDA BUILDING CODE (HIGH VELOCITY HURRICANE ZONE)

SERIES MSD-375 (MEDIUM) & WSD-500 (WIDE)
STILE ALUMINUM ENTRANCE DOOR (WET GLAZED)
LARGE & SMALL MISSILE IMPACT

Oldcastle BuildingEnvelope®
803 AIRPORT RD. TERRELL TX 75160
www.OldcastleBE.com - Phone 800-869-4567

REV. NO	DESCRIPTION	DATE
1	MDC COMMENTS	4/12/17
2		

REV. No	DESCRIPTION	DATE
3		
4		

DRAWN BY: M.L.
DATE: 08/10/16
DRAWING No. 16-093
SHEET 23 OF 32

©2016 TILTECO, INC.

TILLIT TESTING & ENGINEERING COMPANY
6355 N.W. 36th St. Suite 305, Virginia Gardens, FL. 33166
Phone : (305)871-1530, Fax : (305)871-1531
EB-0006719
WALTER A. TILLIT Jr. P.E.
FLORIDA Lic. # 44167

WALTER A. TILLIT JR. LICENSE No. 44167 STATE OF FLORIDA PROFESSIONAL ENGINEER
SIGNATURE DATE

Approved as complying with the Florida Building Code
Date 5/18/17
NOA# 16-1213.02
Miami Dade Product Control
By

DOOR'S TOP AND BOTTOM RAILS AND HORIZONTAL MID-RAIL DETAILS AT 4'-0"x8'-0" OR 8'-0"x8'-0" (MAX.) DOORS (SIDE VIEWS)

SCALE: 6" = 1'

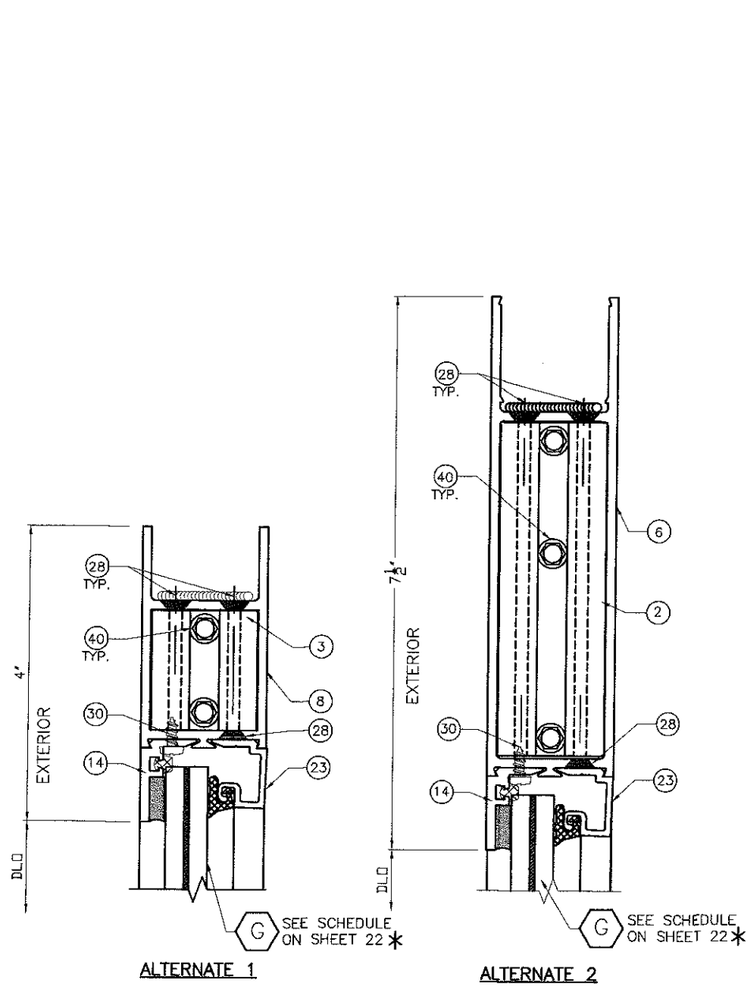

ALTERNATE 1 ALTERNATE 2

1 TOP RAIL

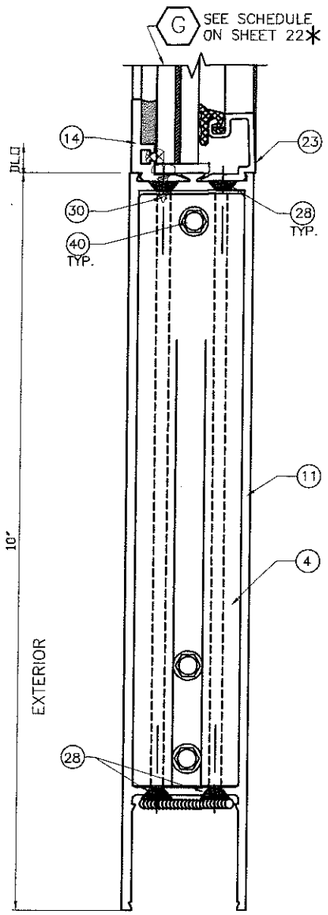

2 BOTTOM RAIL

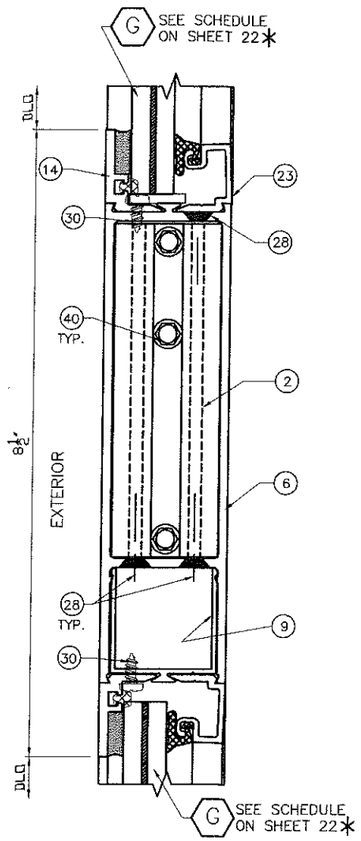

3 HORIZONTAL MID-RAIL

* LAMINATED GLASS SHOWN. SEE GLAZING DETAIL FOR (G15) INSULATED GLASS ON SHEET 22.

FLORIDA BUILDING CODE (HIGH VELOCITY HURRICANE ZONE)

SERIES MSD-375 (MEDIUM) & WSD-500 (WIDE) STILE ALUMINUM ENTRANCE DOOR (WET GLAZED) LARGE & SMALL MISSILE IMPACT

Oldcastle BuildingEnvelope®
803 AIRPORT RD. TERRELL TX 75160
www.OldcastleBE.com-Phone 800-869-4567

REV. NO	DESCRIPTION	DATE	REV. No	DESCRIPTION	DATE
1			3		
2			4		

DRAWN BY: M.L.
DATE: 08/10/16
DRAWING No. 16-093
SHEET 24 OF 32

©2016 TILTECO, INC.

TILLIT TESTING & ENGINEERING COMPANY
6355 N.W. 36th St., Suite 330, VIRGINIA GARDENS, FL 33166
Phone: (305)871-1530, Fax: (305)871-1551
EB-0006719
WALTER A. TILLIT Jr. P.E.
FLORIDA Lic. # 44167

WALTER A. TILLIT JR. LICENSE No. 44167 STATE OF FLORIDA PROFESSIONAL ENGINEER

Approved as complying with the Florida Building Code
Date 5/18/17
NOA# 16-1213.02
Miami Dade Product Control
By Ishaq I. Chanda

DOOR'S HINGE/LOCK/MEETING STILES AND THRESHOLD CONNECTION DETAILS AT 4'-0"x8'-0" OR 8'-0"x8'-0" (MAX.) DOORS (PLAN VIEWS)

SCALE: 6" = 1'

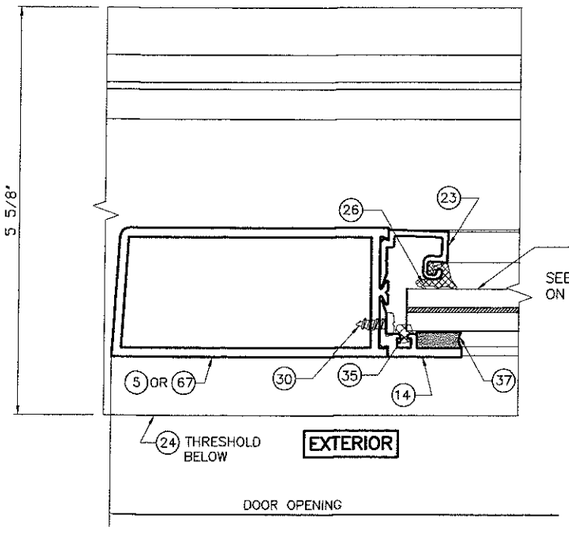

4
JAMB ▲

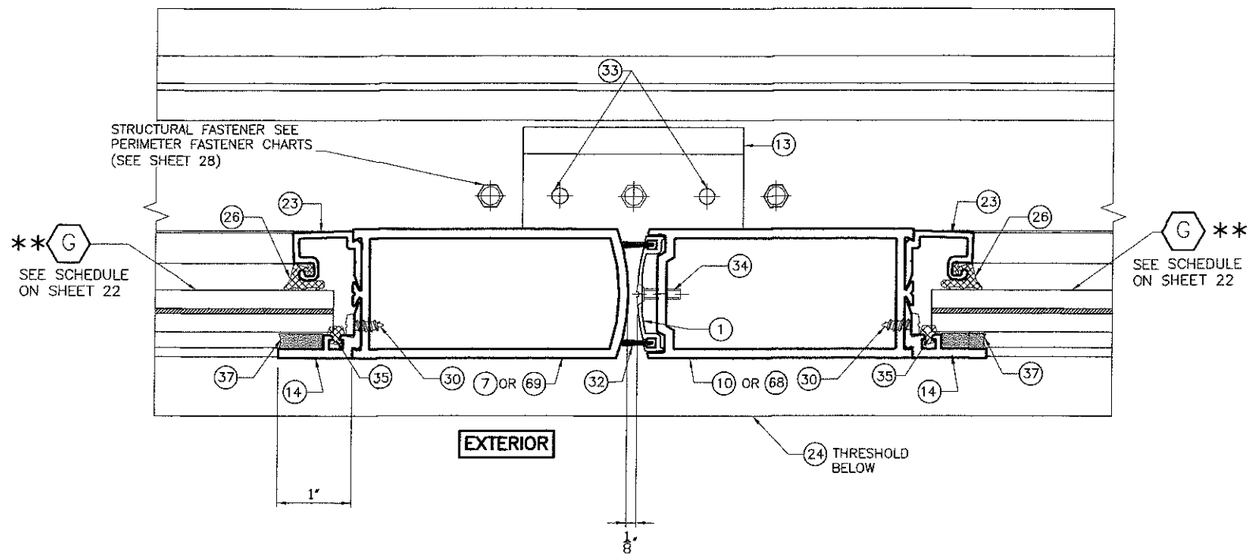

5
MEETING STILES & THRESHOLD CONNECTION ▲

**LAMINATED GLASS SHOWN, SEE GLAZING DETAIL FOR (G15) INSULATING GLASS ON SHEET 22.

▲ HARDWARE NOT SHOWN FOR CLARITY. SEE SHEETS 8, 8A & 8B FOR ELEVATIONS & SECTIONS.

FLORIDA BUILDING CODE (HIGH VELOCITY HURRICANE ZONE)

SERIES MSD-375 (MEDIUM) & WSD-500 (WIDE)
STILE ALUMINUM ENTRANCE DOOR (WET GLAZED)
LARGE & SMALL MISSILE IMPACT

Oldcastle BuildingEnvelope®
803 AIRPORT RD. TERRELL TX 75160
www.OldcastleBE.com-Phone 800-869-4567

REV. NO	DESCRIPTION	DATE
1		
2		

REV. No	DESCRIPTION	DATE
3		
4		

M.L. DRAWN BY:
08/10/16 DATE:
16-093 DRAWING No.
SHEET 25 OF 32

©2016 TILTECO, INC.

TILLIT TESTING & ENGINEERING COMPANY
6355 N.W. 36th St., Suite 301, MIAMI, FLORIDA 33166
Phone : (305)871-1530, FAX: (305)871-1531
EB-0006719

WALTER A. TILLIT Jr. P.E.
FLORIDA Lic. # 44167

WALTER A. TILLIT JR. LICENSE No. 44167 STATE OF FLORIDA PROFESSIONAL ENGINEER

Approved as complying with the Florida Building Code
Date 5/18/17
NOA# 16-1213.02
Miami Dade Product Control
By Ishaq I. Chaudhry

TYPICAL EXTERIOR ELEVATIONS FOR MSD-375 & WSD-500 IMPACT DOOR (WET GLAZED) 4'-0"x8'-0" (SINGLE) & 8'-0"x8'-0"(PAIR OF DOORS) CONNECTED TO EXISTING STRUCTURE OR FG-5000, FG-5100 OR FG-5100T ALUMINUM WINDOW WALL SYSTEM FRAMING

MAX. ASD PRESSURE RATING W/ LAMINATED & INSULATED GLASS IS +70, -70 psf

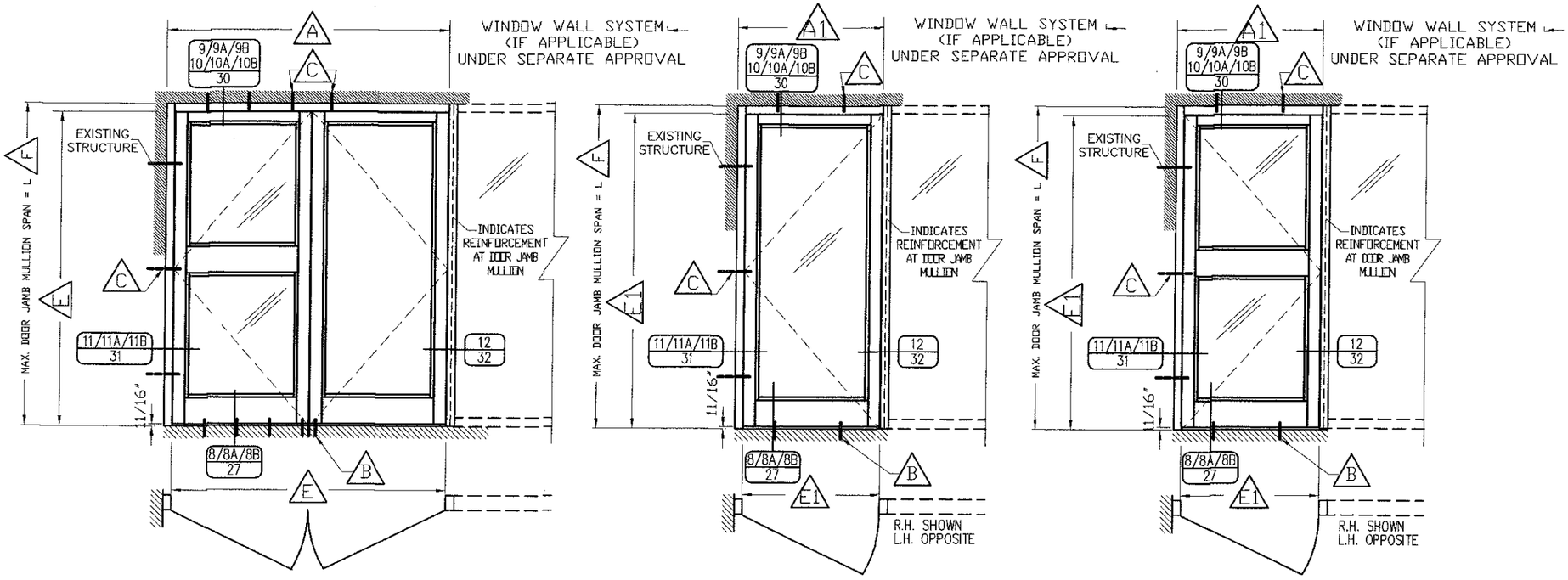

FOOT NOTES:

- A — 101" MAX. DOOR FRAME WIDTH.
- A1 — 53" MAX. DOOR FRAME WIDTH.
- B — FOR THRESHOLD FASTENERS QUANTITY, TYPES AND SPECS SEE SHEETS 29.
- C — FOR JAMB & HEAD FASTENERS QUANTITY, TYPES AND SPECS SEE SHEET 29.
- E — 96" MAXIMUM DOOR HEIGHT (D.O.) & 96" MAXIMUM DOOR WIDTH (D.O.).
- E1 — 96" MAXIMUM DOOR HEIGHT. (D.O & 48" MAXIMUM DOOR WIDTH. (D.O.).
- F — 96" MAXIMUM DOOR JAMB MULLION SPAN 96" MAXIMUM DOOR FRAME HEIGHT.

NOTE: WHEN DOORS ARE MULLED WITH WINDOW WALL, LOWER DESIGN PRESSURE OF DOORS OR WINDOW WALL SHALL CONTROL

FLORIDA BUILDING CODE (HIGH VELOCITY HURRICANE ZONE)

SERIES MSD-375 (MEDIUM) & WSD-500 (WIDE) STILE ALUMINUM ENTRANCE DOOR (WET GLAZED) LARGE & SMALL MISSILE IMPACT

DRAWN BY: M.L.
DATE: 08/10/16
DRAWING No. 16-093
SHEET 26 OF 32

Oldcastle BuildingEnvelope®
803 AIRPORT RD. TERRELL TX 75160
www.OldcastleBE.com-Phone 800-869-4567

REV. NO	DESCRIPTION	DATE
1	MDC COMMENTS	4/12/17
2		
3		
4		

©2016 TILTECO, INC.

TILTECO INC.
TILLIT TESTING & ENGINEERING COMPANY
6355 N.W. 36th. St., Ste. 335, VIRGINIA GARDENS, FL 33166
Phone : (305)871-6500 Fax : (305)871-6531
EB-0006719
WALTER A. TILLIT Jr. P.E.
FLORIDA Lic. # 44167

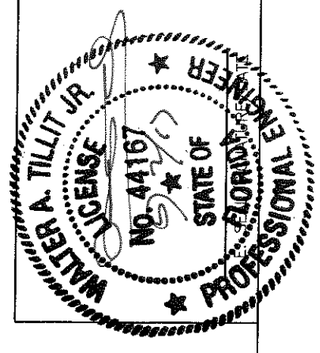

Approved as complying with the Florida Building Code
Date 5/10/17
NOA# 16-1212.02
Miami Dade Product Control
By Isleny I. Chavez

THRESHOLD CONNECTION DETAILS AT 4'-0"x8'-0 OR 8'-0"x8'-0" DOORS TO FG-5000, FG-5100 & FG-5100T

SCALE: 6" = 1'

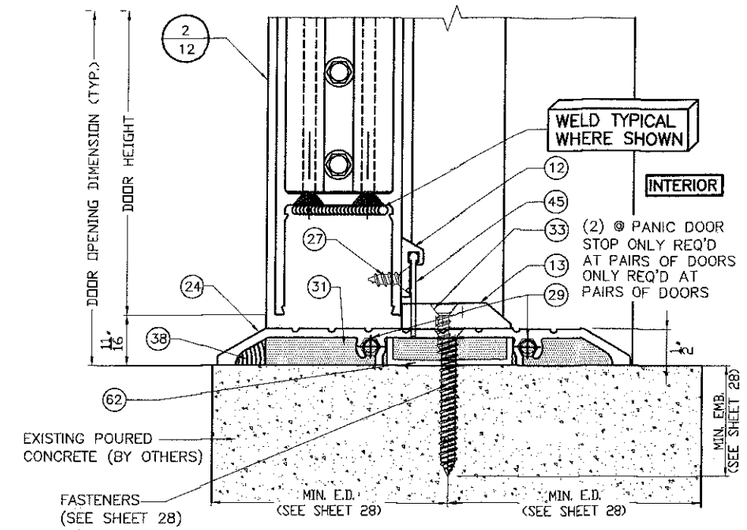

8 THRESHOLD

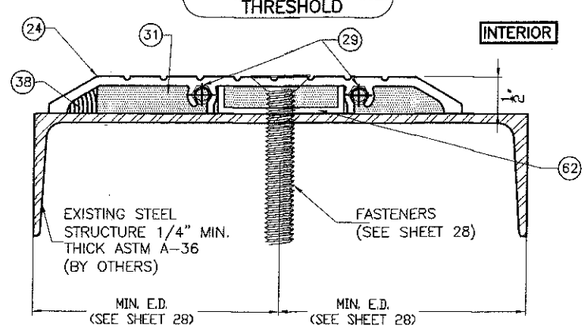

8A THRESHOLD

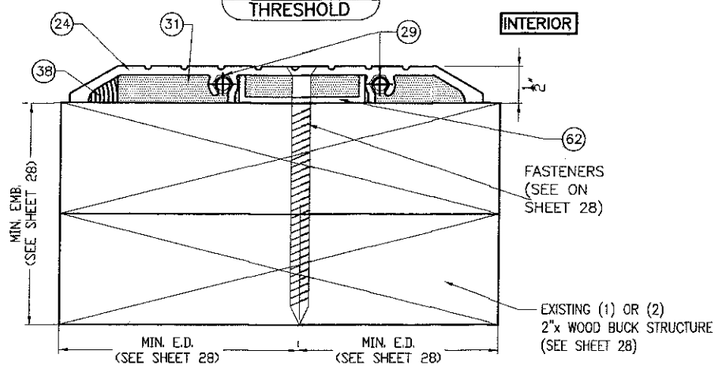

8B THRESHOLD

FLORIDA BUILDING CODE (HIGH VELOCITY HURRICANE ZONE)

SERIES MSD-375 (MEDIUM) & WSD-500 (WIDE) STILE ALUMINUM ENTRANCE DOOR (WET GLAZED) LARGE & SMALL MISSILE IMPACT

M.L. DRAWN BY:

08/10/16 DATE:

16-093 DRAWING No.

SHEET 27 OF 32

Oldcastle BuildingEnvelope®
803 AIRPORT RD. TERRELL TX 75160
www.OldcastleBE.com-Phone 800-869-4567

REV. NO	DESCRIPTION	DATE
1	MDC COMMENTS	4/12/17
2		
3		
4		

©2016 TILTECO, INC.

TILTECO INC.
TILLIT TESTING & ENGINEERING COMPANY
6355 N.W. 36th. St. Ste. 305, VIRGINIA GARDENS, FL 33166
Phone : (305)871-1530 Fax : (305)871-1531
EB-0006719
WALTER A. TILLIT Jr. P.E.
FLORIDA Lic. # 44167

WALTER A. TILLIT JR. LICENSE No. 44167 STATE OF FLORIDA PROFESSIONAL ENGINEER

Approved as complying with the Florida Building Code
Date 5/18/17
NOA# 16-1213.02
Miami Dade Product Control
By

DOOR ANCHORAGE TO CONCRETE, CONCRETE BLOCK, STEEL AND WOOD SUBSTRATES
(VALID FOR 8'-0"x8'-0" & 4'-0"x8'-0" DOORS)

TYPICAL ELEVATIONS FOR DOOR ADJACENT TO FG-5000, FG-5100 & FG-5100T ALUMINUM WINDOW WALL SYSTEM FRAMING

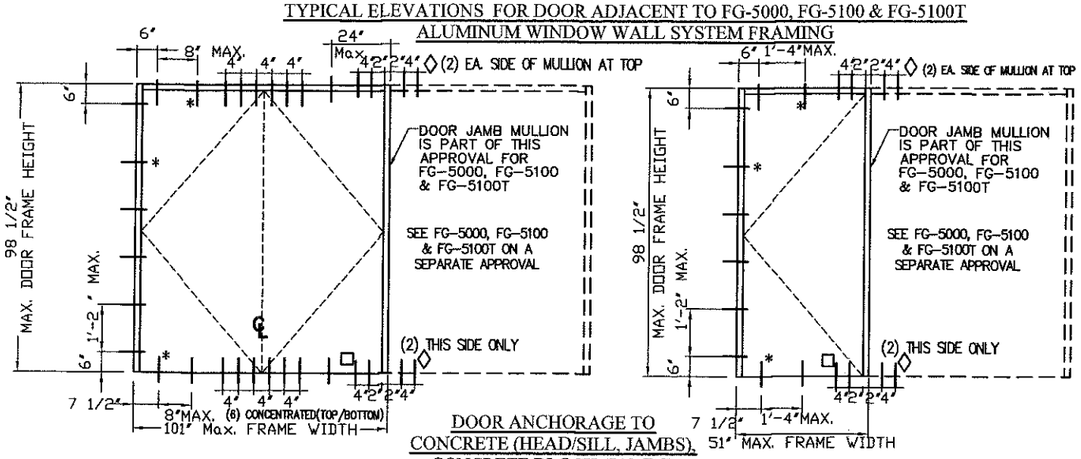

DOOR ANCHORAGE TO CONCRETE (HEAD/SILL, JAMBS), CONCRETE BLOCK (JAMBS)

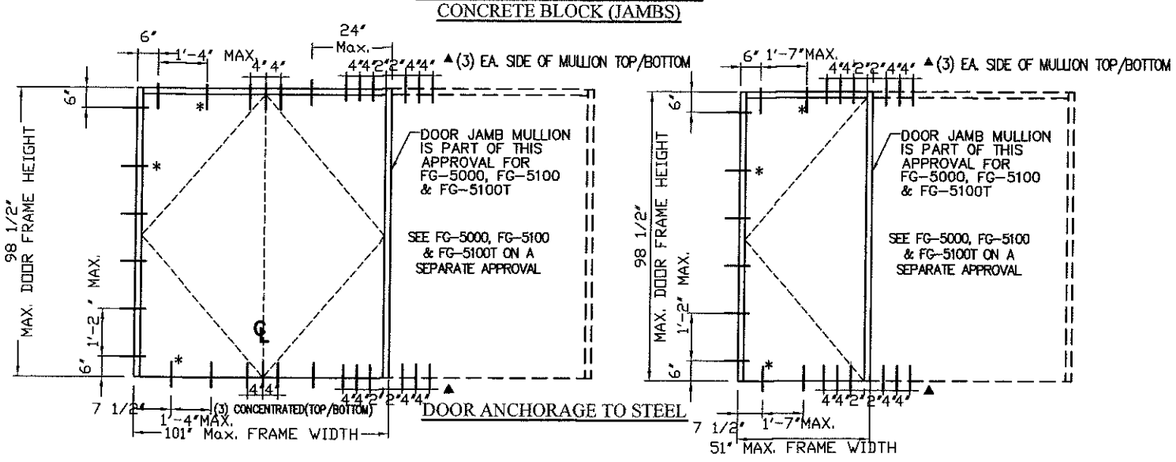

DOOR ANCHORAGE TO STEEL

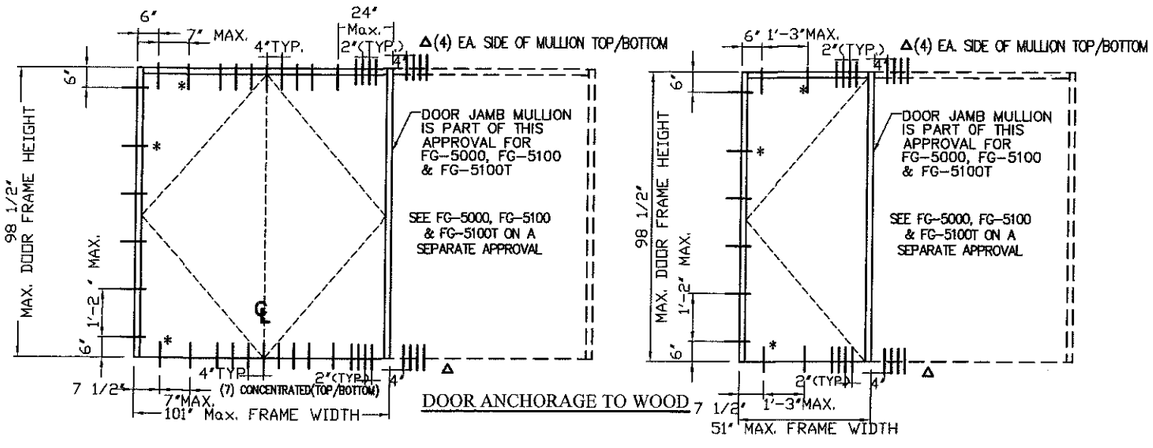

DOOR ANCHORAGE TO WOOD

TYPICAL ELEVATIONS FOR DOOR ADJACENT TO EXISTING STRUCTURE W/ ASD DESIGN PRESSURE RATING UP TO +70, -70 psf

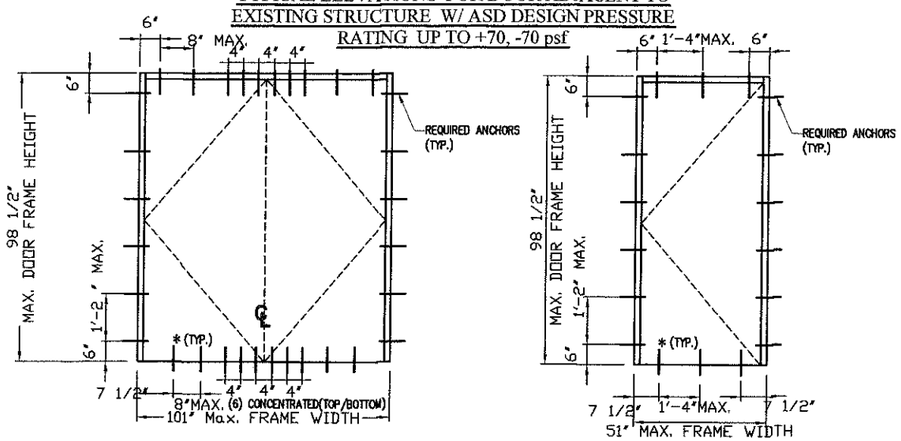

ANCHORAGE TO (Min. f'c=3ksi) CONCRETE OR ASTM C-90 GROUTED FILLED CONCRETE BLOCK

REQUIRED ANCHOR:	LOCATION:
* 1/4"Ø F.H. ELCO ULTRACON ANCHOR W/ 1 3/4" Min. EMBEDMENT W/2 1/2" MIN. EDGE DISTANCE, BEYOND ANY FINISH MATERIAL.	AT HEAD , SILL & JAMBS OF DOOR
◇ 3/8"Ø H.H. POWERS FASTENERS TAPPER SCREW ANCHOR W/ 2" MIN. EMBEDMENT INTO POURED CONCRETE (MIN. F'C = 3 KSI), W/ 4 1/2" MIN. EDGE DISTANCE, BEYOND ANY FINISH MATERIAL.	AT HEAD & SILL OF DOOR JAMB MULLION AT WINDOW WALL SIDE
◇ 3/8"Ø H.H. LTD ITW/RED HEAD SCREW ANCHOR W/ 2" Min. EMBEDMENT, W/ 4" MIN. EDGE DISTANCE, BEYOND ANY FINISH MATERIAL..	AT HEAD & SILL OF DOOR JAMB MULLION AT WINDOW WALL SIDE
□ 3/8"Ø F.H. POWERS FASTENERS TAPPER SCREW ANCHOR W/ 1 3/4" MIN. EMBEDMENT INTO POURED CONCRETE (MIN. F'C = 3 KSI), W/ 6" MIN. EDGE DISTANCE, BEYOND ANY FINISH MATERIAL.	AT HEAD & SILL OF DOOR JAMB MULLION AT DOOR SIDE

ANCHORAGE TO 1/8" THICK ASTM A-36 STEEL OR 10 GAGE (0.135"), ASTM A-653, GRADE 33 STEEL

REQUIRED ANCHOR:	LOCATION:
* 1/4"Ø-20 F.H. ELCO DRILL FLEX SELF DRILLING SCREWS W/ 1/2" MIN. EDGE DISTANCE BEYOND ANY FINISH MATERIAL. SCREWS TO BE MIN. FULLY ENGAGED INTO PROFILE THICKNESS.	AT HEAD , SILL & JAMBS OF DOOR
▲ 3/8"Ø H.H. TYPE "F" BOLT W/ 3/4" MIN. EDGE DISTANCE, BEYOND ANY FINISH MATERIAL. BOLT TO BE MIN. FULLY ENGAGED INTO PROFILE THICKNESS	AT HEAD & SILL OF DOOR JAMB MULLION AT EITHER SIDE OF MULLION

ANCHORAGE INTO G=0.55 MIN. WOOD

REQUIRED ANCHOR:	LOCATION:
* #14 F.H. WOOD SCREWS OR 1/4"Ø ELCO ULTRACON TO SINGLE 2x BUCK W/ 1 1/2" MIN. PENETRATION W/ 1" MIN. EDGE DISTANCE, BEYOND ANY FINISH MATERIAL.	AT HEAD , SILL & JAMBS OF DOOR
△ 5/16"Ø LAG SCREWS TO DOUBLE 2x BUCK (G=0.55) W/ 3" Min. PENETRATION INTO WOOD W/ 1 1/2" MIN. EDGE DISTANCE, BEYOND ANY FINISH MATERIAL, OR 5/16"Ø ELCO ULTRACONS W/ 3" MIN. PENETRATION INTO DOUBLE 2xBUCK (G=0.55) W/ 1 1/2" MIN. EDGE DISTANCE, BEYOND ANY FINISH MATERIAL	AT HEAD & SILL OF DOOR JAMB MULLION AT EITHER SIDE OF MULLION

FLORIDA BUILDING CODE (HIGH VELOCITY HURRICANE ZONE)

SERIES MSD-375 (MEDIUM) & WSD-500 (WIDE)
STILE ALUMINUM ENTRANCE DOOR (WET GLAZED)
LARGE & SMALL MISSILE IMPACT

DRAWN BY: M.L.
DATE: 08/10/16
DRAWING No. 16-093
SHEET 28 OF 32

REV. NO	DESCRIPTION	DATE
1	MDC COMMENTS	4/12/17
2		
3		
4		

Oldcastle BuildingEnvelope®
803 AIRPORT RD. TERRELL, TX 75160
www.OldcastleBE.com-Phone 800-869-4567

©2016 TILTECO, INC.

TILTECO INC.
TESTING & ENGINEERING COMPANY
TILLIT TESTING & ENGINEERING COMPANY
6355 N.W. 36th St. MIAMI SPRINGS, FL 33166
Phone : (305)871-1530, Fax : (305)871-1531
EB-0006719
WALTER A. TILLIT Jr. P.E.
FLORIDA Lic. # 44167

WALTER A. TILLIT JR. LICENSE NO. 44167 STATE OF FLORIDA PROFESSIONAL ENGINEER

Approved as complying with the Florida Building Code
Date 5/18/17
NOA# 16-1213.02
Miami Dade Product Control
By

TYPICAL DOOR CORNER ASSEMBLY DETAILS (ISOMETRIC)
W/ MSD-375 & WSD-500 SYSTEMS

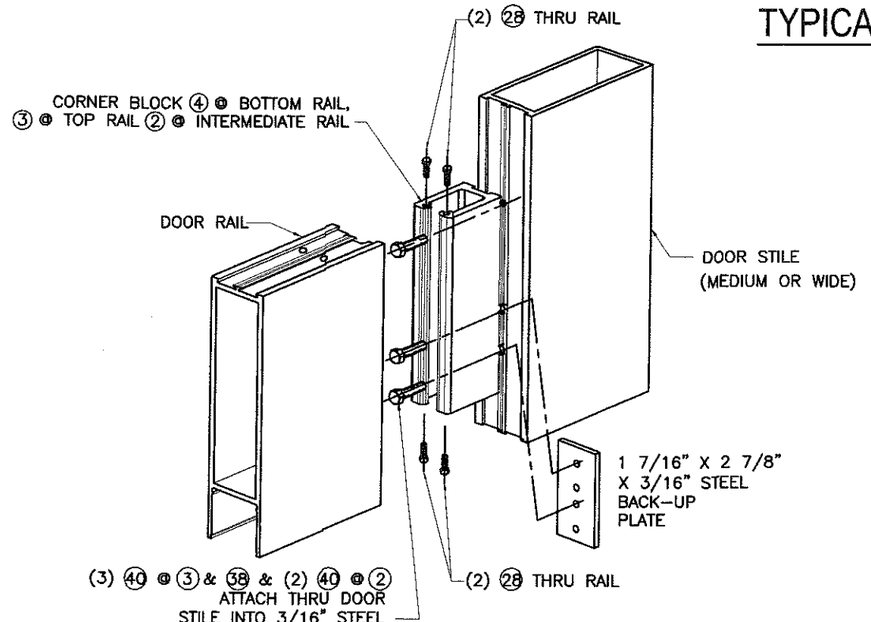

TYPICAL DOOR CORNER ASSEMBLY DETAIL (ISOMETRIC)

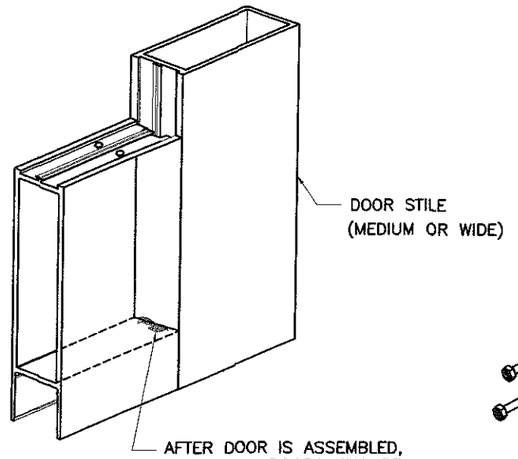

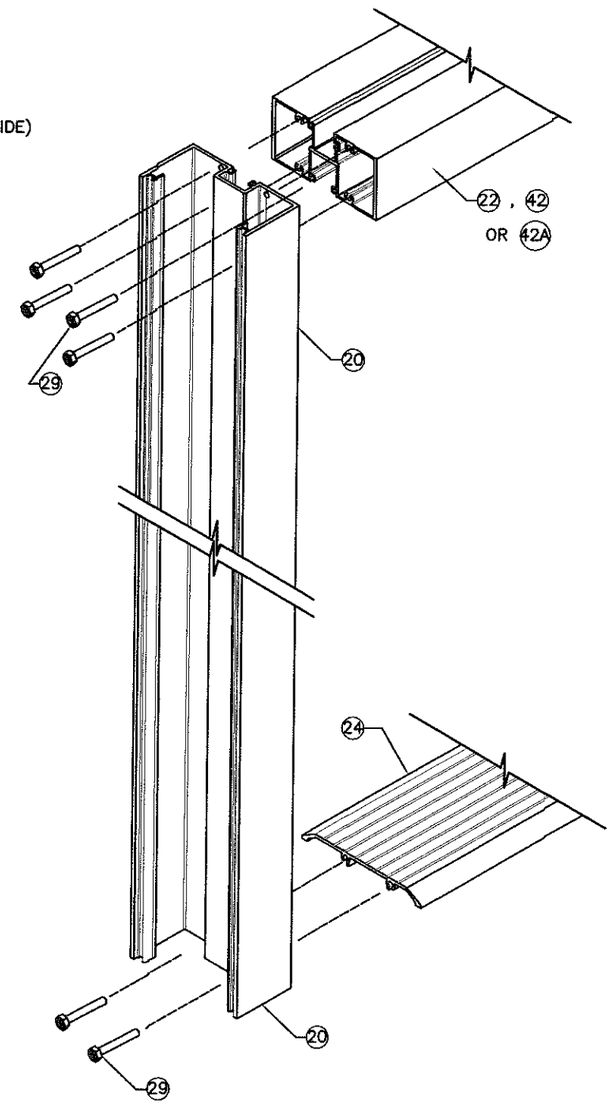

HEAD AND THRESHOLD ASSEMBLY

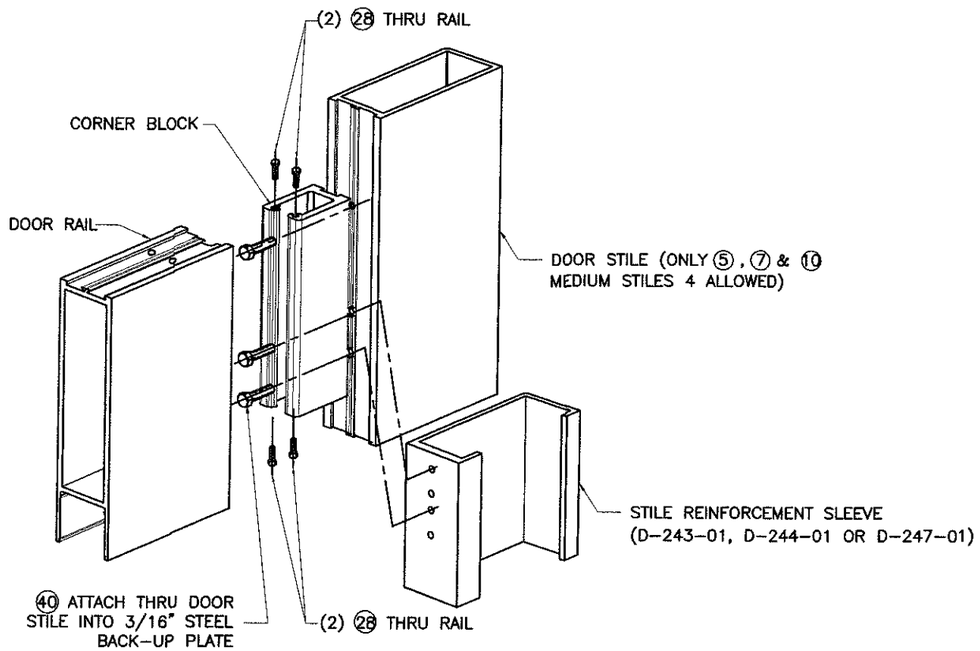

DOOR CORNER ASSEMBLY DETAIL (ISOMETRIC), ONLY FOR REGENT 5770 CVR PANIC DEVICE HARDWARE

FLORIDA BUILDING CODE (HIGH VELOCITY HURRICANE ZONE)

SERIES MSD-375 (MEDIUM) & WSD-500 (WIDE)
STILE ALUMINUM ENTRANCE DOOR (WET GLAZED)
LARGE & SMALL MISSILE IMPACT

DRAWN BY: M.L.
DATE: 08/10/16
DRAWING No. 16-093
SHEET 29 OF 32

Oldcastle BuildingEnvelope™
803 AIRPORT RD. TERRELL TX 75160
www.OldcastleBE.com-Phone 800-869-4567

REV. NO	DESCRIPTION	DATE
1		
2		
3		
4		

©2016 TILTECO, INC.

TILLIT TESTING & ENGINEERING COMPANY
6355 N.W. 36th. St. Suite 305 MIAMI, FLORIDA 33166
Phone : (305)871-1530, Fax : (305)871-1531
EB-0006719
WALTER A. TILLIT Jr. P.E.
FLORIDA Lic. # 44167

WALTER A. TILLIT JR. LICENSE No. 44167 STATE OF FLORIDA PROFESSIONAL ENGINEER

Approved as complying with the Florida Building Code
Date 5/18/17
NOA# 16-1213.02
Miami Dade Product Control
By Ishaq I. Chanda

DOOR HEADER CONNECTION DETAILS FOR MSD-375 & WSD-50 FOR 3'-6"x8'-0"(SINGLE), 7'-0"x8'-0"(PAIR) OR 4'-0"x8'-0"(SINGLE), 8'-0"x8'-0"(PAIR) DOORS

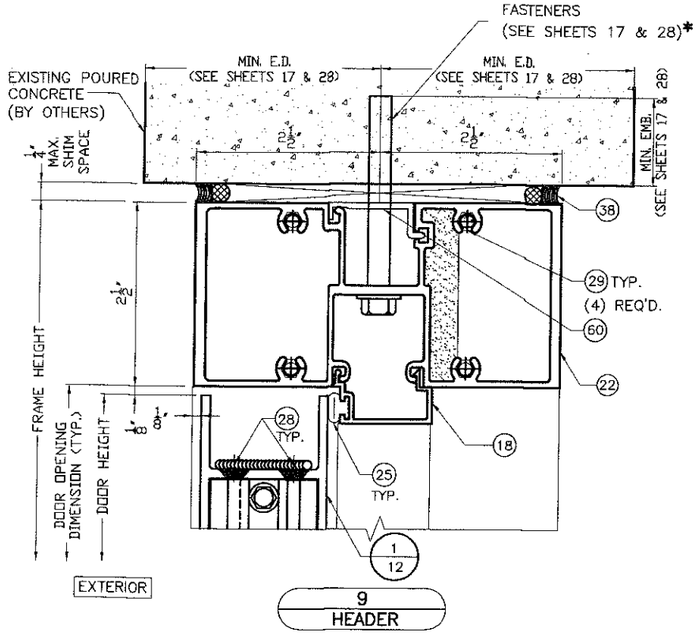

9
HEADER

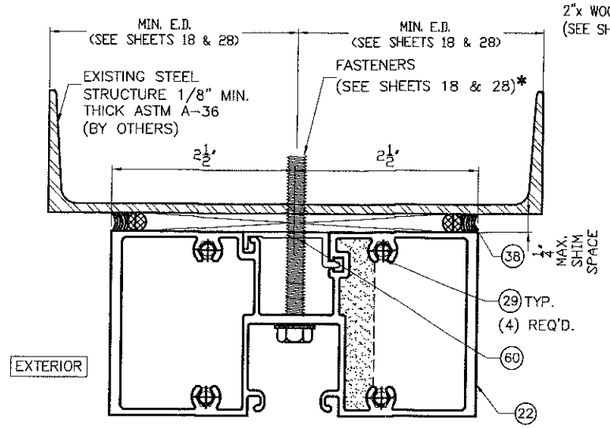

9A
HEADER

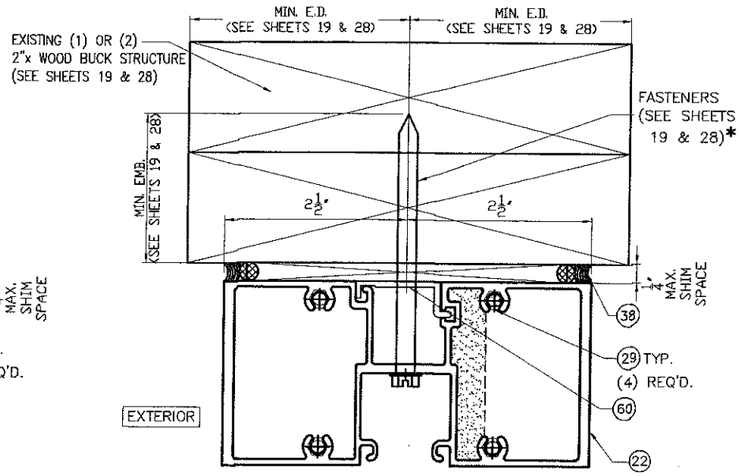

9B
HEADER

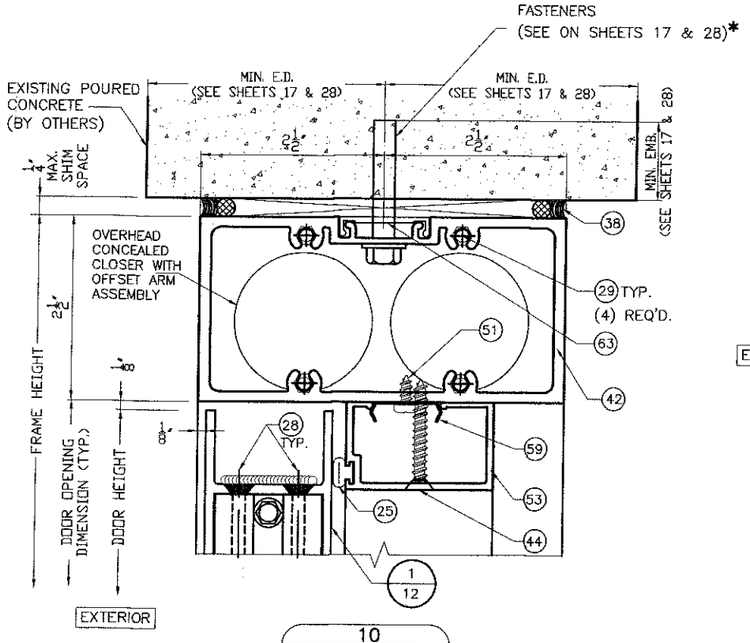

10
HEADER CONC.

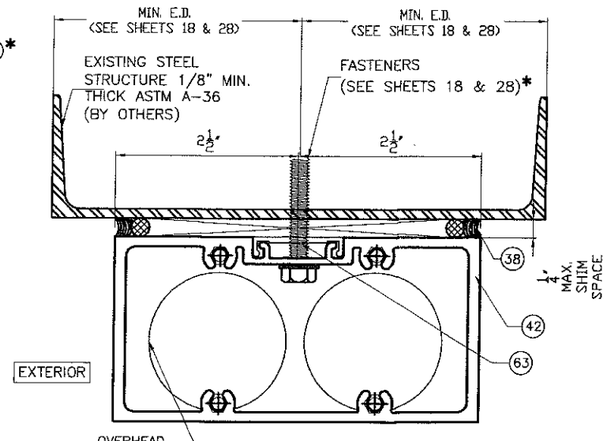

10A
HEADER STEEL

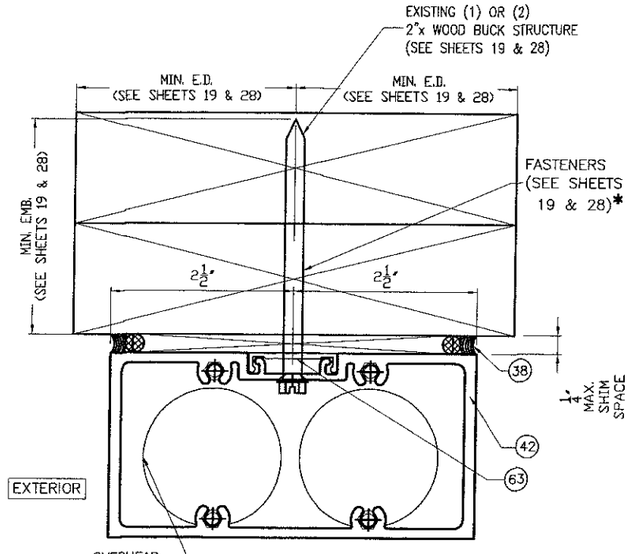

10B
HEADER WOOD

* ONLY REQUIRED AT PAIRS OF DOORS

FLORIDA BUILDING CODE (HIGH VELOCITY HURRICANE ZONE)

SERIES MSD-375 (MEDIUM) & WSD-500 (WIDE) STILE ALUMINUM ENTRANCE DOOR (WET GLAZED) LARGE & SMALL MISSILE IMPACT

M.L. DRAWN BY:

08/10/16 DATE:

16-093 DRAWING No.

SHEET 30 OF 32

Oldcastle BuildingEnvelope®
803 AIRPORT RD. TERRELL TX 75160
www.OldcastleBE.com-Phone 800-869-4567

REV. NO	DESCRIPTION	DATE
1	MDC COMMENTS	4/12/17
2		
3		
4		

©2016 TILTECO, INC.

TILLIT TESTING & ENGINEERING COMPANY
6355 N.W. 36th. St., Ste. 305, VIRGINIA GARDENS, FL 33166
Phone : (305)871-1530 , Fax : (305)871-1531
EB-0006719
WALTER A. TILLIT Jr. P.E.
FLORIDA Lic. # 44167

WALTER A. TILLIT JR. LICENSE No. 44167 STATE OF FLORIDA PROFESSIONAL ENGINEER

Approved as complying with the Florida Building Code
Date 5/18/17
NOA# 16-1213.02
Miami Dade Product Control
By

JAMB & DOOR JAMB MULLION CONNECTION DETAILS FOR MSD-375 & WSD-50 FOR 3'-6"x8'-0"(SINGLE), 7'-0"x8'-0"(PAIR) OR 4'-0"x8'-0"(SINGLE), 8'-0"x8'-0"(PAIR) DOORS

◊ NOTE:
INDICATED MAXIMUM AND MINIMUM VALUES FOR SPECIFIED SEALANT VERTICAL JOINT WIDTH AT JAMBS CONNECTED TO WALL HAVE BEEN DETERMINED ONLY TAKING INTO CONSIDERATION THE ACTUAL MOVEMENT OF GLASS WALL AT JAMBS DUE TO THERMAL, WIND AND ITS OWN CONSTRUCTION TOLERANCE, AND NOT PERFORMANCE FACTORS FROM THE SURROUNDING STRUCTURE.

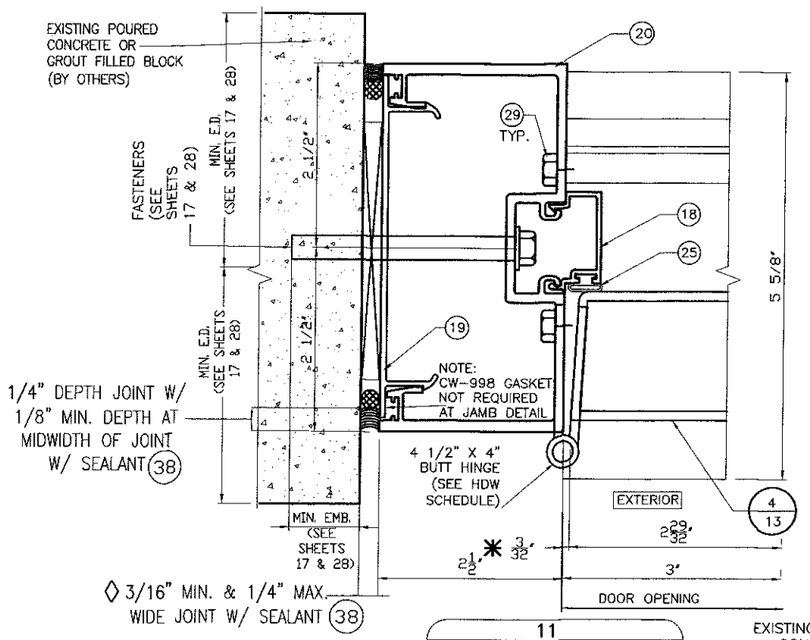

11
JAMB TO WALL @ DOOR

* NOTE:
3/32" CLEARANCE DIMENSIONS SHOWN ARE TYPICAL FOR BUTT HINGES OR OFFSET PIVOTS. GEAR HINGES REQUIRE 5/16" CLEARANCE AT JAMBS.

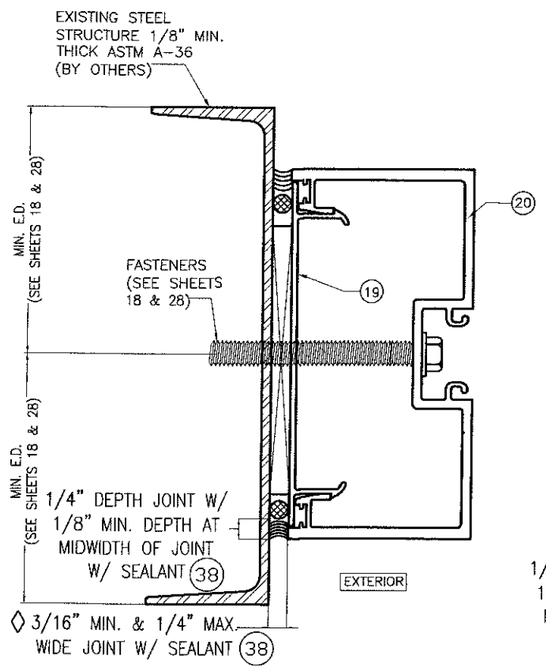

11A
JAMB TO WALL

OR

13A
JAMB TO WALL @ TRANSOM

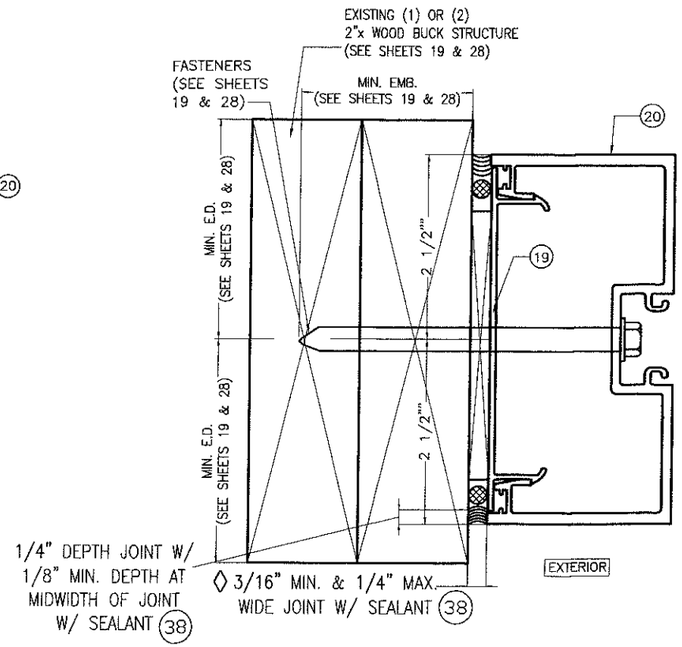

11B
JAMB TO WALL

OR

13B
JAMB TO WALL @ TRANSOM

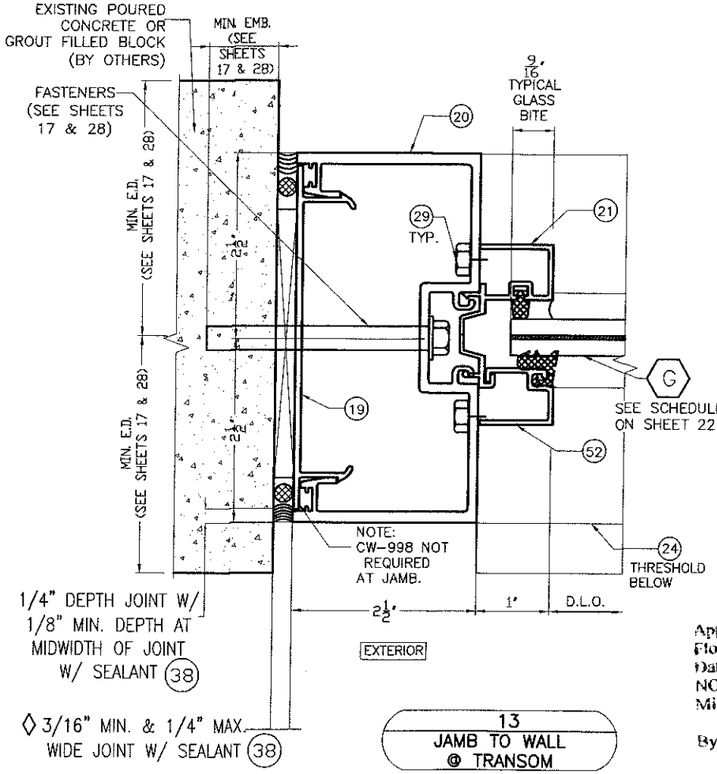

13
JAMB TO WALL @ TRANSOM

FLORIDA BUILDING CODE (HIGH VELOCITY HURRICANE ZONE)

SERIES WSD-375 (MEDIUM) & WSD-500 (WIDE) STILE ALUMINUM ENTRANCE DOOR (WET GLAZED) LARGE & SMALL MISSILE IMPACT

M.L. DRAWN BY:
08/10/16 DATE:
16-093 DRAWING No.
SHEET 31 OF 32

Oldcastle BuildingEnvelope™
803 AIRPORT RD. TERRELL, TX 75160
www.OldcastleBE.com Phone 800-869-4567

REV. NO	DESCRIPTION	DATE
1	MDC COMMENTS	4/12/17
2		
3		
4		

©2016 TILTECO, INC.

TILTECO INC.
TILLIT TESTING & ENGINEERING COMPANY
6355 N.W. 36th, St., Ste. 305, VIRGINIA GARDENS, FL. 33166
Phone : (305)871-1530 , Fax : (305)871-1531
EB-0006719
WALTER A. TILLIT Jr. P.E.
FLORIDA Lic. # 44167

WALTER A. TILLIT JR. LICENSE No. 44167 STATE OF FLORIDA PROFESSIONAL ENGINEER

Approved as complying with the Florida Building Code
Date 5/18/17
NOA# 16-1213.02
Miami Dade Product Control
By

DOOR JAMB MULLION CONNECTION DETAILS TO FG-500, FG-5100 & FG-5100T STOREFRONT SYSTEMS

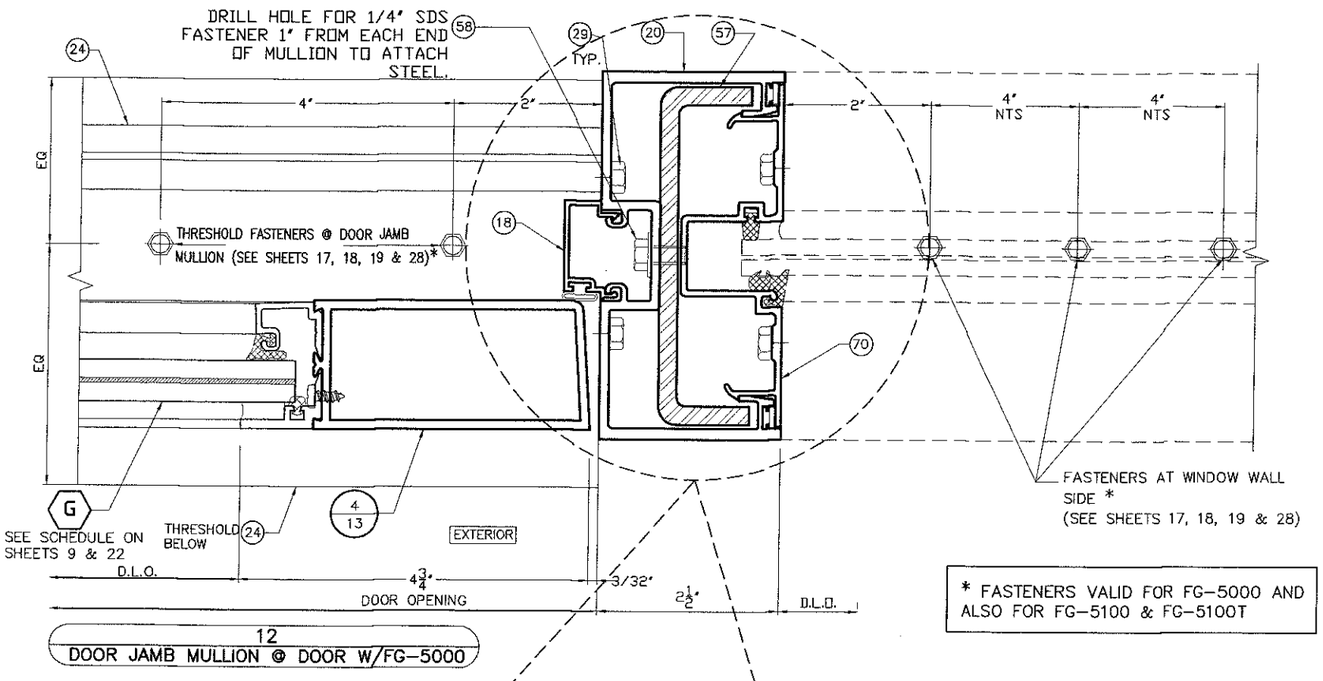

12
DOOR JAMB MULLION @ DOOR W/FG-5000

* FASTENERS VALID FOR FG-5000 AND ALSO FOR FG-5100 & FG-5100T

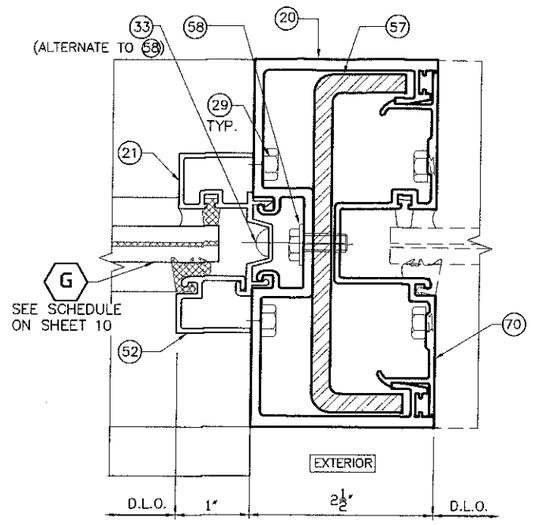

14
DOOR JAMB MULLION @ TRANSOM W/FG-5000

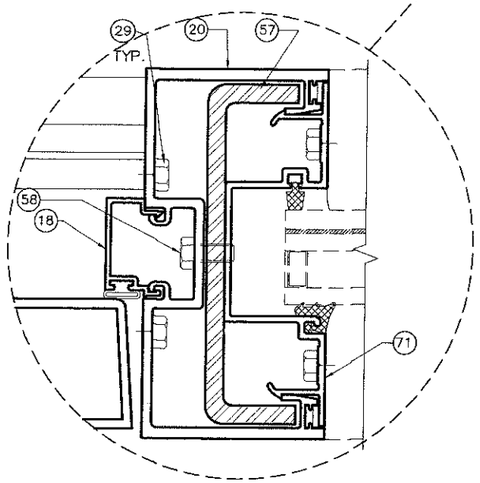

12
DOOR JAMB MULLION @ DOOR W/FG-5100

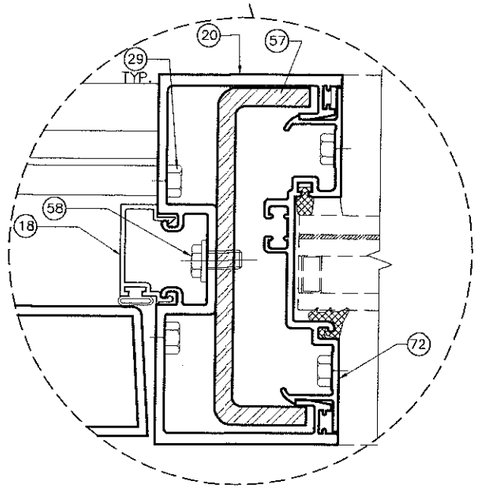

12
DOOR JAMB MULLION @ DOOR W/FG-5100T

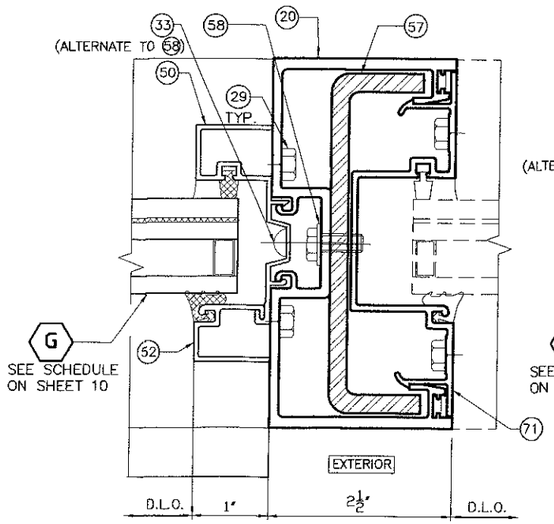

14
DOOR JAMB MULLION @ TRANSOM W/FG-5100

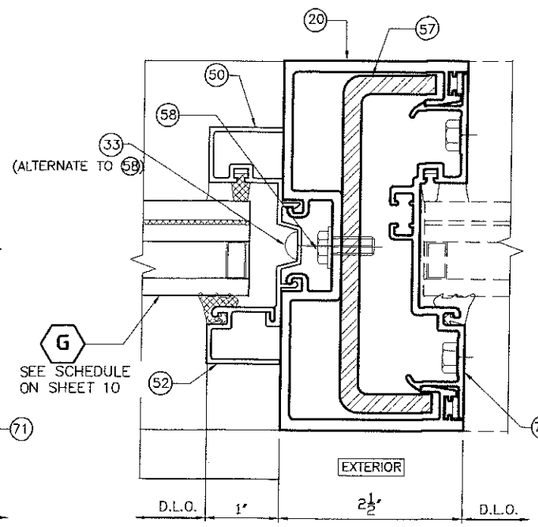

14
DOOR JAMB MULLION @ TRANSOM W/FG-5100T

FLORIDA BUILDING CODE (HIGH VELOCITY HURRICANE ZONE)

SERIES MSD-375 (MEDIUM) & WSD-500 (WIDE) STILE ALUMINUM ENTRANCE DOOR (WET GLAZED) LARGE & SMALL MISSILE IMPACT

M.L. DRAWN BY:

08/10/16 DATE:

16-093 DRAWING No.

SHEET 32 OF 32

Oldcastle BuildingEnvelope®
803 AIRPORT RD. TERRELL TX 75160
www.OldcastleBE.com-Phone 800-869-4567

REV. NO	DESCRIPTION	DATE
1	MDC COMMENTS	4/12/17
2		
3		
4		

©2016 TILTECO, INC.

TILTECO INC.
TILLIT TESTING & ENGINEERING COMPANY
6355 N.W. 36th St. Ste. 305, Miami, FLORIDA 33166
Phone : (305)871-1530, Fax : (305)871-1531
EB-0006719
WALTER A. TILLIT Jr. P.E.
FLORIDA Lic. # 44167

WALTER A. TILLIT JR. LICENSE No. 44167 STATE OF FLORIDA PROFESSIONAL ENGINEER DATE

Approved as complying with the Florida Building Code
Date MAY 18, 2017
NOA# 16-1213.02
Miami Dade Product Control
By Ishaq I. Chanda